Yale®

ARCHITECTURAL EXIT DEVICE

7000 SERIES

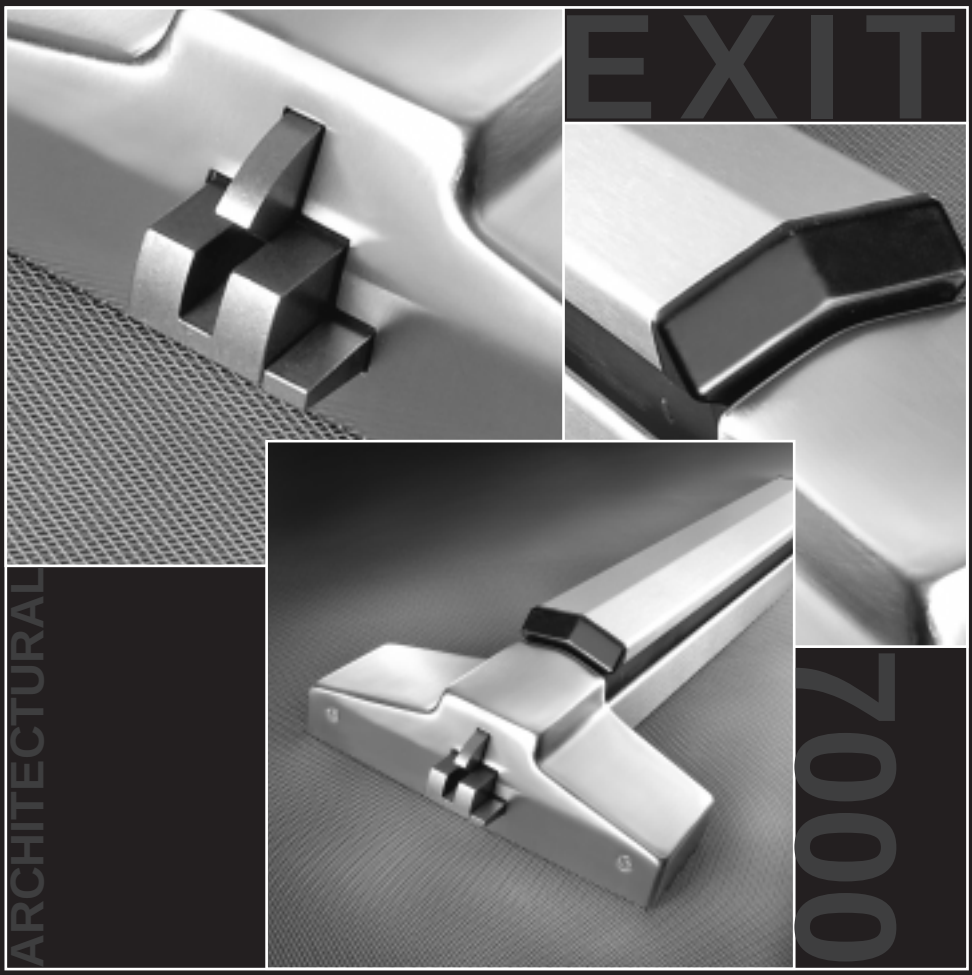

PARTS & SERIVCE MANUAL

7000 SERIES PARTS MANUAL

TABLE OF CONTENTS

Introduction
Installation Notes 4
How to Order Parts 4
Handing 4
Finish Chart 5
Exit Devices
7100(F) / 7200 Rim Exit Device 6
7200M(F) Rim Exit Device 7
7150(F) / 7250 Rim Exit Device 8
7250M(F) Rim Exit Device 9
7110(F) / 7210 Surface Vertical Rod 10-11
7210M(F) Surface Vertical Rod 12-13
7170(F)(W)(10) Surface Vertical Rod 14-15
7170(F)(W)(10) LBR Surface Vertical Rod (Less Bottom Rod) 16-17
7120(F) / 7220 Concealed Vertical Rod Exit Device 18-19
7220M(F) Concealed Vertical Rod Exit Device 20-21
7160(F)(W)(10) Concealed Exit Device 22-23
7160 (F)(W)(10) LBR Concealed Exit Device (Less Bottom Rod) 24-25
7130(F) Mortise Exit Device 26-27
720DB Rigid Bar 28-29
Touch Bar 30-31
Trim
626F, 628F, 629F Trim 32-33
627F Trim 34-35
656F, 658F Trim 36-37
620F, 621F, 651F Trim 38-39
522F, 524F, 525F, 526F, 528F, 529F Trim 40-41
523F, 527F Trim 42-43
552F, 554F, 556F, 558F Trim 44-45
520F, 521F, 551F Trim 46-47
533F, 535F Trim 48-49
573F, 575F Trim 50-51
532F, 534F, 562F Trim 52-53
530F, 531F, 561F Trim 54-55
502F, 504F, 505F, 506F, 508F, 509F Trim 56-57
500F, 501F, 503F, 507F Trim 58-59
518F, 519F Trim 60-61
513F, 517F Trim 62-63
512F, 514F Trim 64-65
541F, 546F, 548F, 549F Trim 66-67
542F, 544F Trim 68-69

Levers and Knobs 70
Accessories 71-73
Mullion Parts 74
Handing Instructions 75-76
Surface Vertical Rod Devices 77
Concealed Vertical Rod Devices 78
Troubleshooting 79

INTRODUCTION

Installation Notes

1. Only fire rated components can be used on fire rated exit devices. Doing otherwise will void any type of product warranty, labeling and listing. Any component bearing the UL mark for fire rating cannot be supplied Ref. items with UL symbol.
2. Refer to the templates and installation instructions for complete door preparation and installation requirements.
3. Machine screws are provided for steel reinforced doors, threaded-to-the-head AB Type screws are provided for wood door applications. In addition, sex nuts and bolts are provided for fire rated devices and are optional for non-rated devices. It is recommended that sex nuts and bolts be used for all exit device applications. This will improve the performance and extend the life of the product.

How to Order Parts

1. In order to simplify the ordering procedure and maintain regulatory compliance, parts are only available as listed
2. To order parts, provide the appropriate quantity, part number, finish, hand (when required) and description as directed and illustrated below.

   For example, use the following configuration to order:

   A) ten mullion stabilizer kits (page 72) to match USP application

   B) one surface vertical rod latch cover (page 8) in bright brass

	Quantity	Part Number	Finish	Hand	Description
A	10	81-9500-1417-FIN	USP	---	Stabilizer Kit
B	1	60-7010-X040-FIN	US3	---	Top Latch Cover

For assistance, contact your authorized Yale distributor, sales agency or visit our website at www.yalesecurity.com.

Handing

Left Hand Reverse: Hinges on left, opens outward. For handed devices, specify LHR.

Right Hand Reverse: Hinges on right, opens outward. For handed devices, specify RHR.

Note: Doors with Panic-Exit and Fire Exit hardware must open out. Therefore, hands must be reverse bevel.

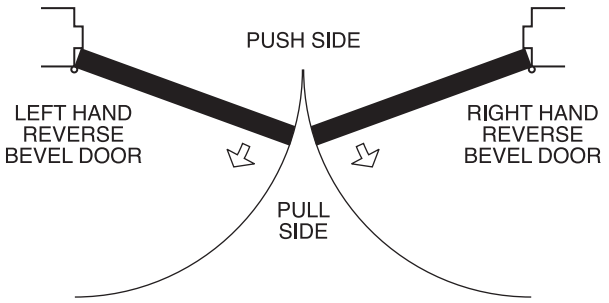

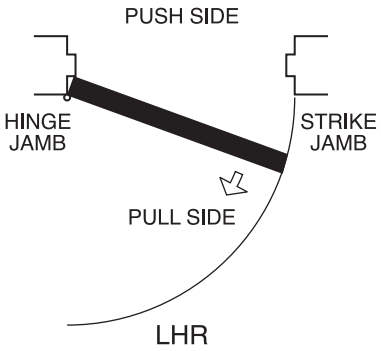

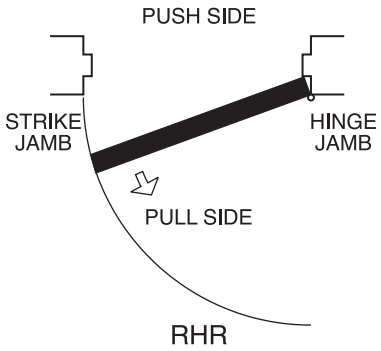

FINISH CHART

ANSI Code	Old Yale Number	Finish
691	BL	Light bronze baked powder coat, satin.
689	SB	Aluminum baked powder coat, satin.
695	313	Dark amber baked powder coat.
605	US3	Bright brass, clear coated.
606	US4	Satin brass, clear coated.
611	US9	Bright bronze, clear coated.
612	US10	Satin bronze, clear coated.
613	US10B	Oxidized satin bronze.
625	US26	Bright chromium plated.
626	US26D	Satin chromium plated.
629	US32	Bright stainless steel.
630	US32D	Satin stainless steel.
600	USP	Prime coated

7100(F)/7200 RIM EXIT DEVICE

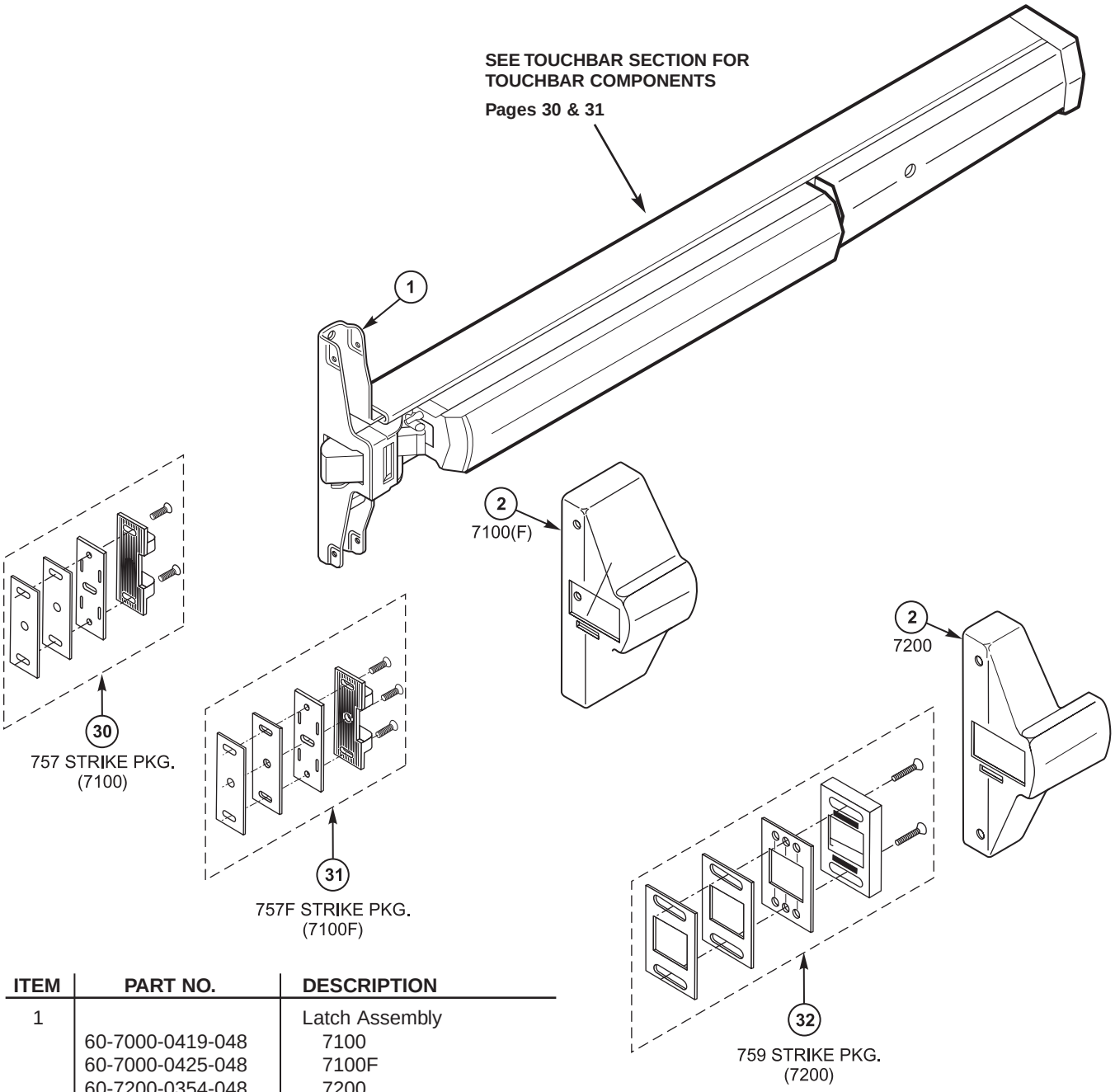

ITEM	PART NO.	DESCRIPTION
1		Latch Assembly
	60-7000-0419-048	7100
	60-7000-0425-048	7100F
	60-7200-0354-048	7200
2		Cover
	60-7100-2026-FIN	7100
	Not Available	7100F UL
	60-7000-X111-FIN	7200
30	81-9500-1356-200	757 Strike Packet (7100)
31	81-9500-1373-200	757F Strike Packet (7100F)
32	81-9500-1357-200	759 Strike Packet (7200)

Difference in Latch Assemblies

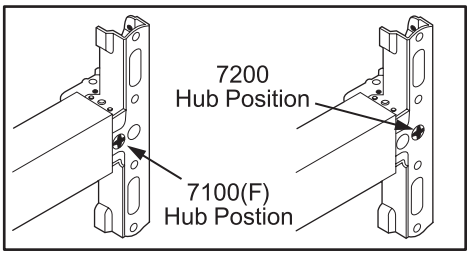

7200M(F) RIM EXIT DEVICE

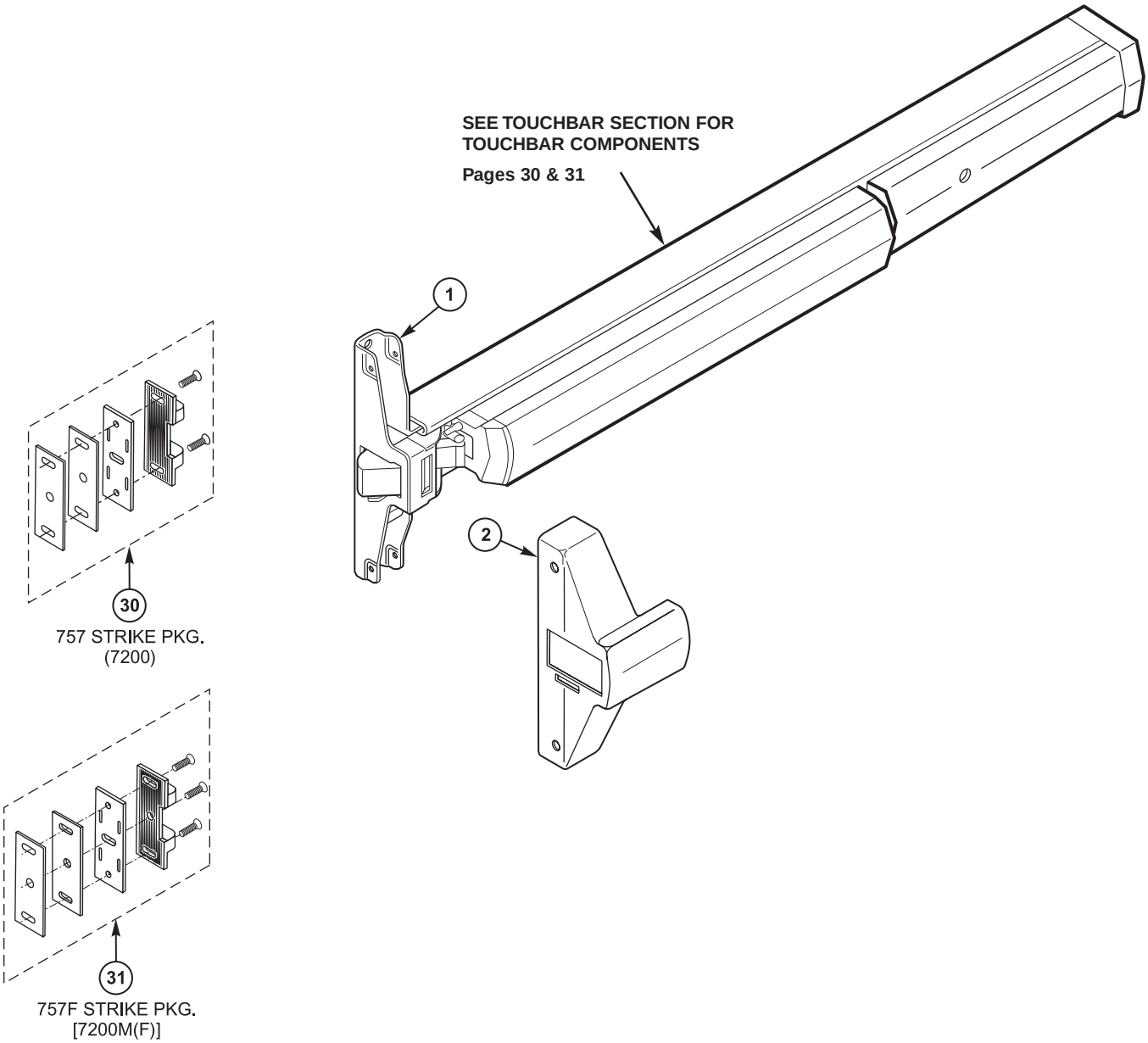

ITEM	PART NO.	DESCRIPTION
1	60-7200-0354-048 60-7200-0362-048	Latch Assembly 7200M 7200MF
2	60-7000-X111-FIN Not Available	Cover 7200M 7200MF UL
30	81-9500-1356-200	757 Strike Packet 7200M
31	81-9500-1373-200	757F Strike Packet 7200MF

Latch Assembly

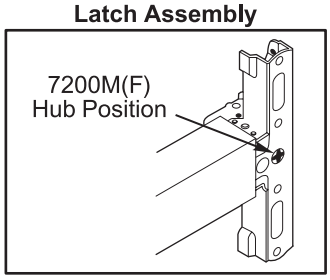

7150(F)/7250 RIM EXIT DEVICE

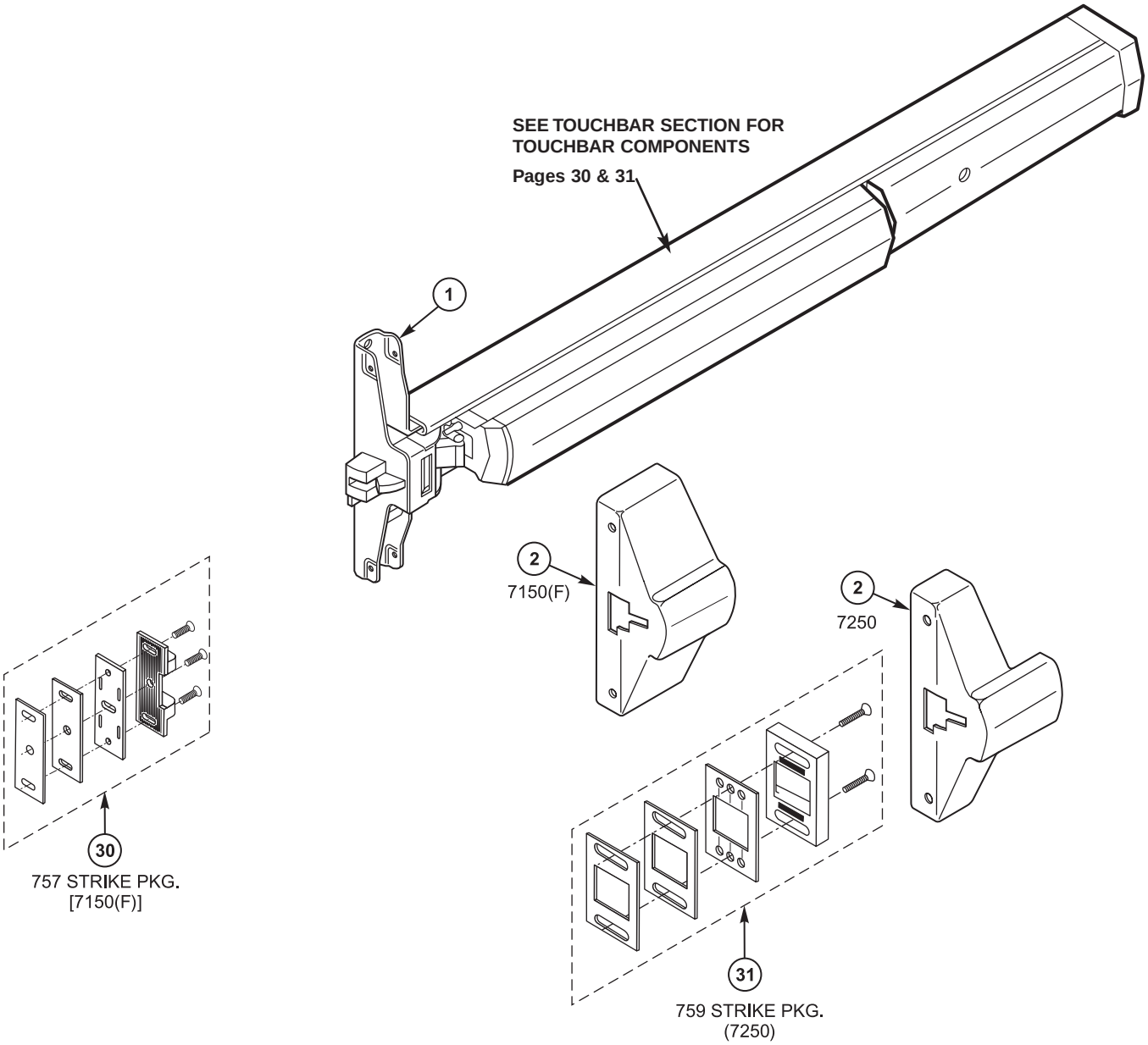

ITEM	PART NO.	DESCRIPTION
1		Latch Assembly
	60-7150-0005-048	7150, 7150F
	60-7250-0001-048	7250
2		Cover
	60-7150-X001-FIN	7150
	Not Available	7150F UL
	60-7250-X001-FIN	7250
30	81-9500-1373-200	757F Strike Packet [7150M(F)]
31	81-9500-1357-200	759 Strike Packet (7250)

Difference in Latch Assemblies

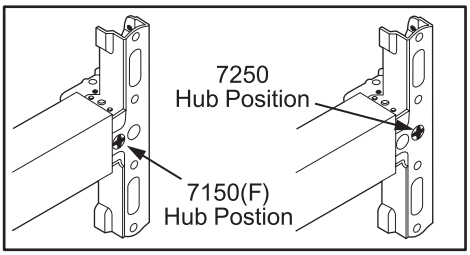

7250M(F) RIM EXIT DEVICE

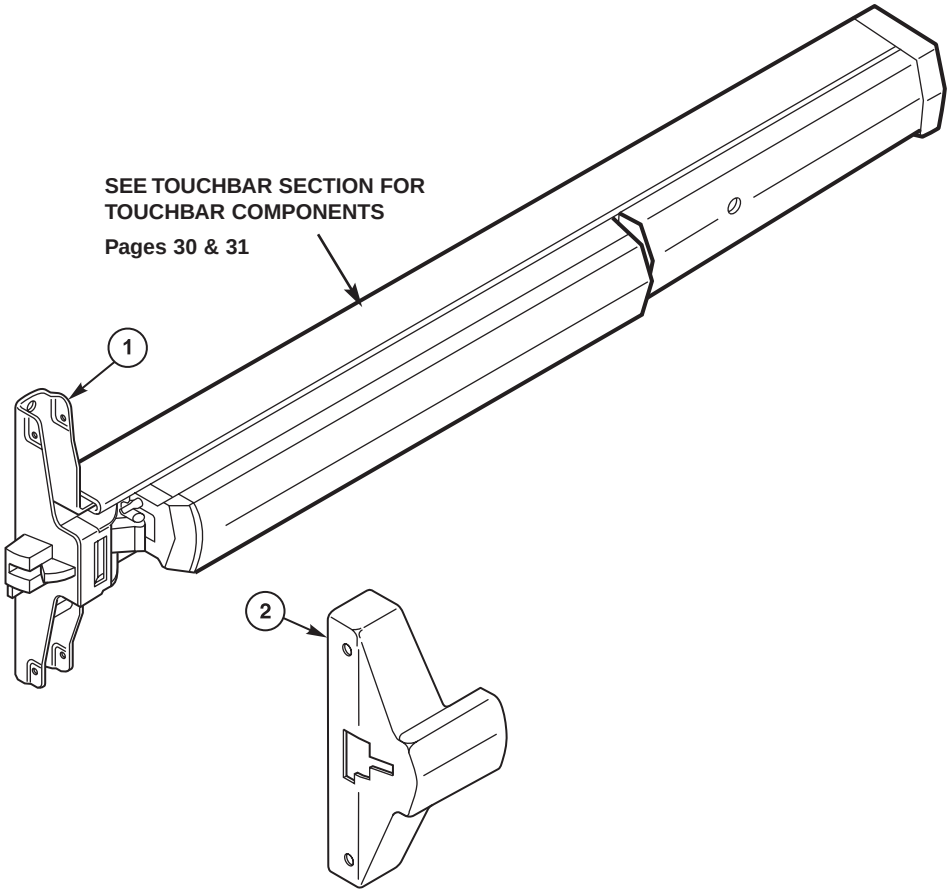

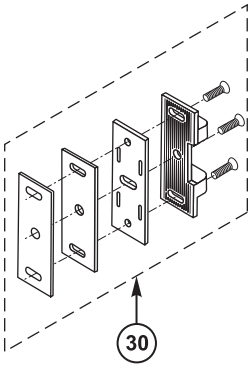

757F STRIKE PKG.
[7250M(F)]

ITEM	PART NO.	DESCRIPTION
1	60-7250-0001-048	Latch Assembly 7250M(F)
2	60-7250-X001-FIN Not Available	Cover 7250M 7250MF UL
30	81-9500-1373-200	757F Strike Packet [7250M(F)]

Latch Assembly

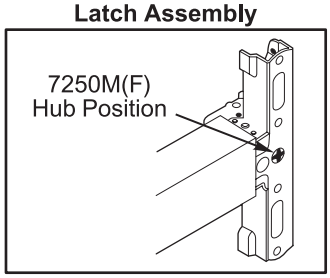

7110(F)/7210 SURFACE VERTICAL ROD

ITEM	PART NO.	DESCRIPTION
1		Latch Assembly
	60-7010-0360-048	7110, 7110F (Must Specify Hand)
	60-7210-0354-048	7210 (Must Specify Hand)
2		Cover
	60-7110-X003-FIN	7110
	(*Not Available*)	7110F UL
	60-7010-X069-FIN	7210
3	03-0080-5047-FIN	Sex Nut Pack (4) Fire Rated Only
23	81-9500-1549-FIN	Screw Packet, Cover #8-32 x 5/16" UFPHMS (4)
32	60-7010-X040-FIN	Cover, Top & Bottom Latch
33		Top Latch
	60-7010-0049-999	7110, 7210
	60-7010-0050-999	7110F

ITEM	PART NO.	DESCRIPTION
34	81-9500-1512-000	SVR Pack
		Consists of the following:
	60-7110-1038-048	Top Mtg. Plate
	60-7010-1039-048	Bottom Mtg. Plate
	60-7010-1067-048	Top Rod Connector
	99-9999-4308-999	Rod Connecting Pin
	60-1500-6150-999	Drill Jig
	60-7010-1046-059	Floor Bolt
	60-7010-1055-200	Strike
	81-9500-1546-000	Latch Mounting Screw Packet
	81-3111-0676-048	Latch Mounting Screw (4) (Wood Door Panic)
	81-9500-1454-200	791 Top Strike Packet
35		Bottom Bolt Case
	60-7010-0054-000	7110, 7210
	60-7010-0053-000	7110F
36	60-7010-X052-FIN	Top Rod
37	60-7010-0020-FIN	Bottom Rod Assembly
39	81-9500-1514-FIN	Rod Guide Packet
40	81-9500-1464-200	Blade Stop Block Packet (7210 only)

7110(F)/7210 SURFACE VERTICAL ROD

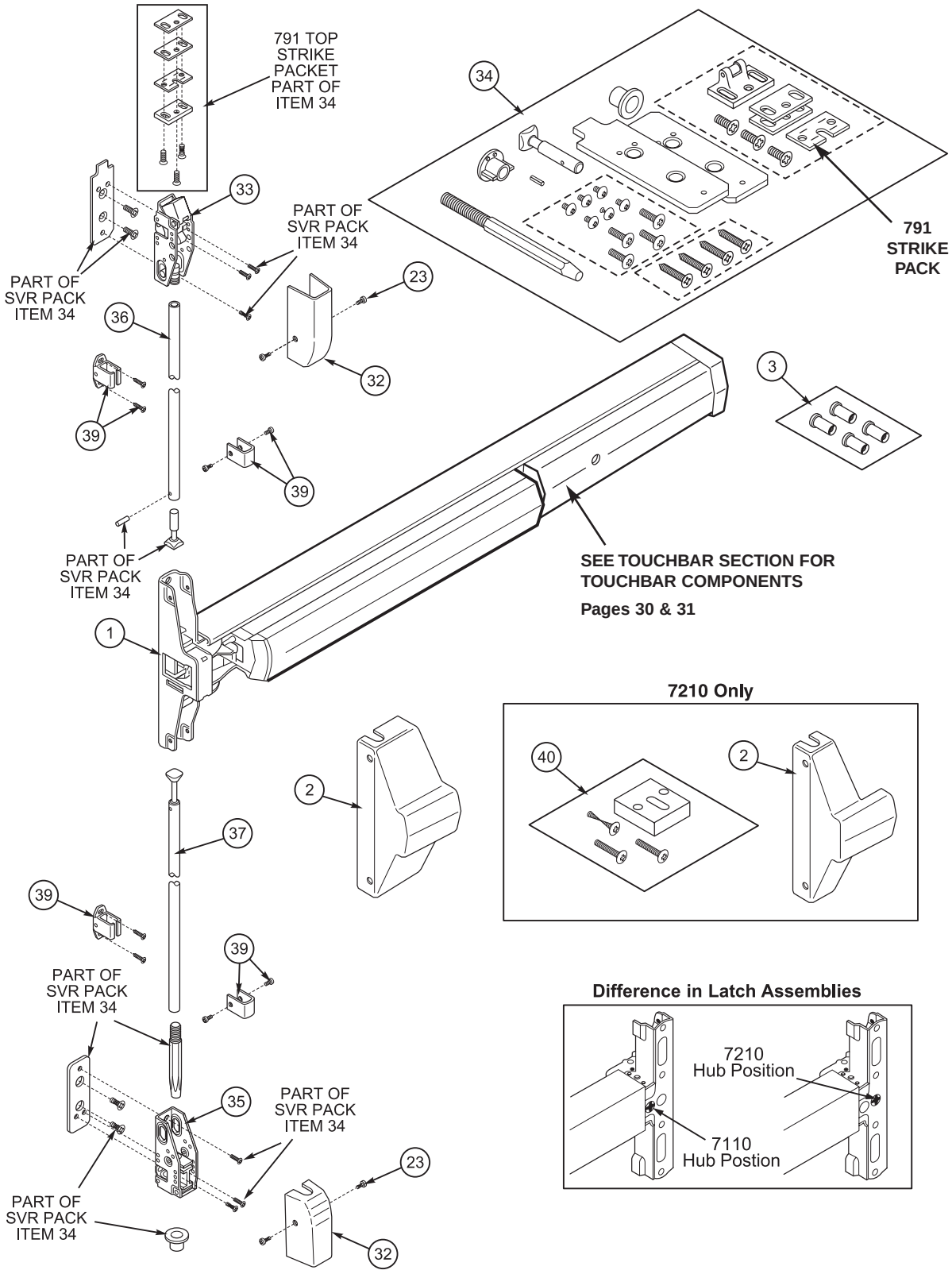

7210 Only

Difference in Latch Assemblies

7210M(F) SURFACE VERTICAL ROD

ITEM	PART NO.	DESCRIPTION
1		Latch Assembly
	60-7210-0354-048	7210M, 7210MF (Must Specify Hand)
2		Cover
	60-7110-X003-FIN	7210M
	Not Available	7210MF UL
3	03-0080-5047-FIN	Sex Nut Pack (4) Fire Rated Only
23	81-9500-1549-FIN	Screw Packet, Cover #8-32 x 5/16" UFPHMS (4)
32	60-7010-X040-FIN	Cover, Top & Bottom Latch
33		Top Latch
	60-7010-0049-999	7210M
	60-7010-0050-VEN	7210MF
34	81-9500-1512-000	SVR Pack
		Consists of the following:
	60-7110-1005-048	Top Mtg. Plate
	60-7010-1039-048	Bottom Mtg. Plate
	60-7010-1067-048	Top Rod Connector
	99-9999-3934-999	Rod Connecting Pin
	60-1500-6150-999	Drill Jig
	60-7010-1046-059	Floor Bolt
	60-7010-1055-200	Strike
	81-9500-1546-000	Latch Mounting Screw Pack
	03-0080-5047-FIN	Sex Nut Pack (4) Fire Rated Only
	81-9500-1454-200	Top Strike Packet

ITEM	PART NO.	DESCRIPTION
35		Bottom Bolt Case
	60-7010-0054-000	7210M
	60-7010-0053-000	7210MF
36	60-7010-X052-FIN	Top Rod
37	60-7010-0020-FIN	Bottom Rod Assembly
39	81-9500-1514-FIN	Rod Guide Packet
		Consists of the following:
	60-7010-9050-999	Guide, Rod (2)
	60-7010-X051-FIN	Cover, Rod Guide (2)
	81-3110-0412-058	Screw, #8 x 1/2 RPHMS (4)
	81-0011-0404-FIN	Screw, #8-32 x 1/4" FPHMS (4)

7210M(F) SURFACE VERTICAL ROD

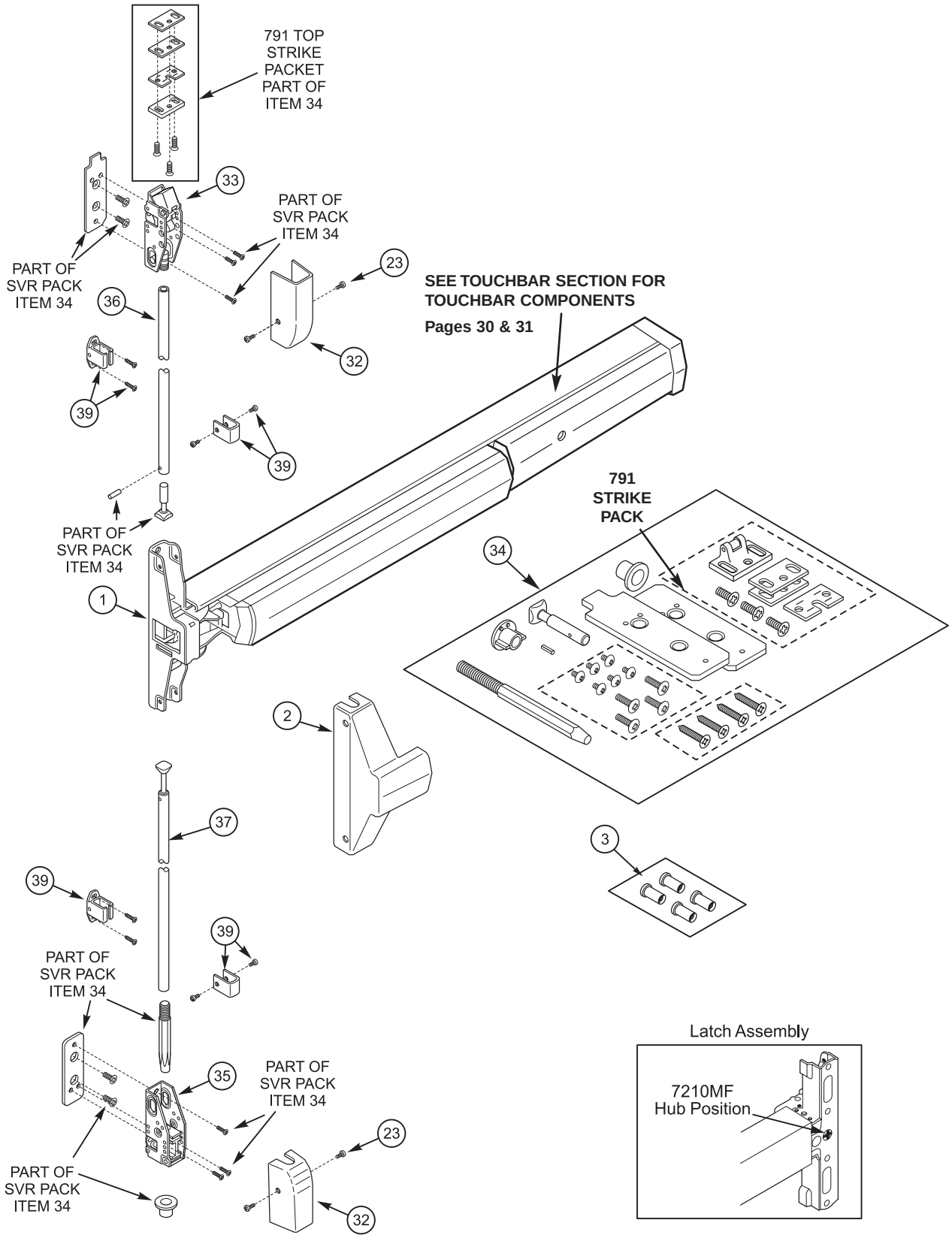

7170(F)(W)(10) SURFACE VERTICAL ROD

ITEM	PART NO.	DESCRIPTION
1		Latch Assembly
	60-7010-0360-048	7170, 7170F (Must Specify Hand)
2		Cover
	60-7110-X003-FIN	7170
	Not Available	7170F UL
3	03-0080-5047-FIN	Sex Nut Pack (4) (Fire Rated Only)
4	60-1510-0281-FIN	Rod Extension Assy., 24” (-10 Device Only)
5	60-1510-0278-FIN	Rod Extension Assy., 12” (-10 Device Only)
23	81-9500-1549-FIN	Screw Packet, Cover #8-32 x 5/16" UFPHMS (4)
32	60-7010-X040-FIN	Cover, Top & Bottom Latches (2)
33		Top Latch
	60-7010-0049-999	7170
	60-7010-0050-999	7170F
33 (Optional)	60-7010-0055-999	7170(F)ES Electric Strike

ITEM	PART NO.	DESCRIPTION
34	81-9500-1562-000	SVR Pack
		Consists of the following:
	60-7110-1005-048	Top Mtg. Plate
	60-7010-1039-048	Bottom Mtg. Plate
	60-7010-1067-048	Top Rod Connector
	99-9999-4308-999	Rod Connecting Pin
	60-1500-6150-999	Drill Jig
	60-7010-1046-059	Floor Bolt
	60-7010-1055-200	Strike
	81-9500-1546-000	Latch Mounting Screw Pack
	81-3111-0676-048	Latch Mounting Screw (4) (Wood Door Panic)
	81-9500-1576-000	726 Top Strike Packet
35		Bottom Bolt Case
	60-7010-0054-000	7170
	60-7010-0053-000	7170F
36	60-7010-X052-FIN	Top Rod
37	60-7010-0020-FIN	Bottom Rod Assembly
39	81-9500-1514-FIN	Rod Guide Packet

7170(F)(W)(10) SURFACE VERTICAL ROD

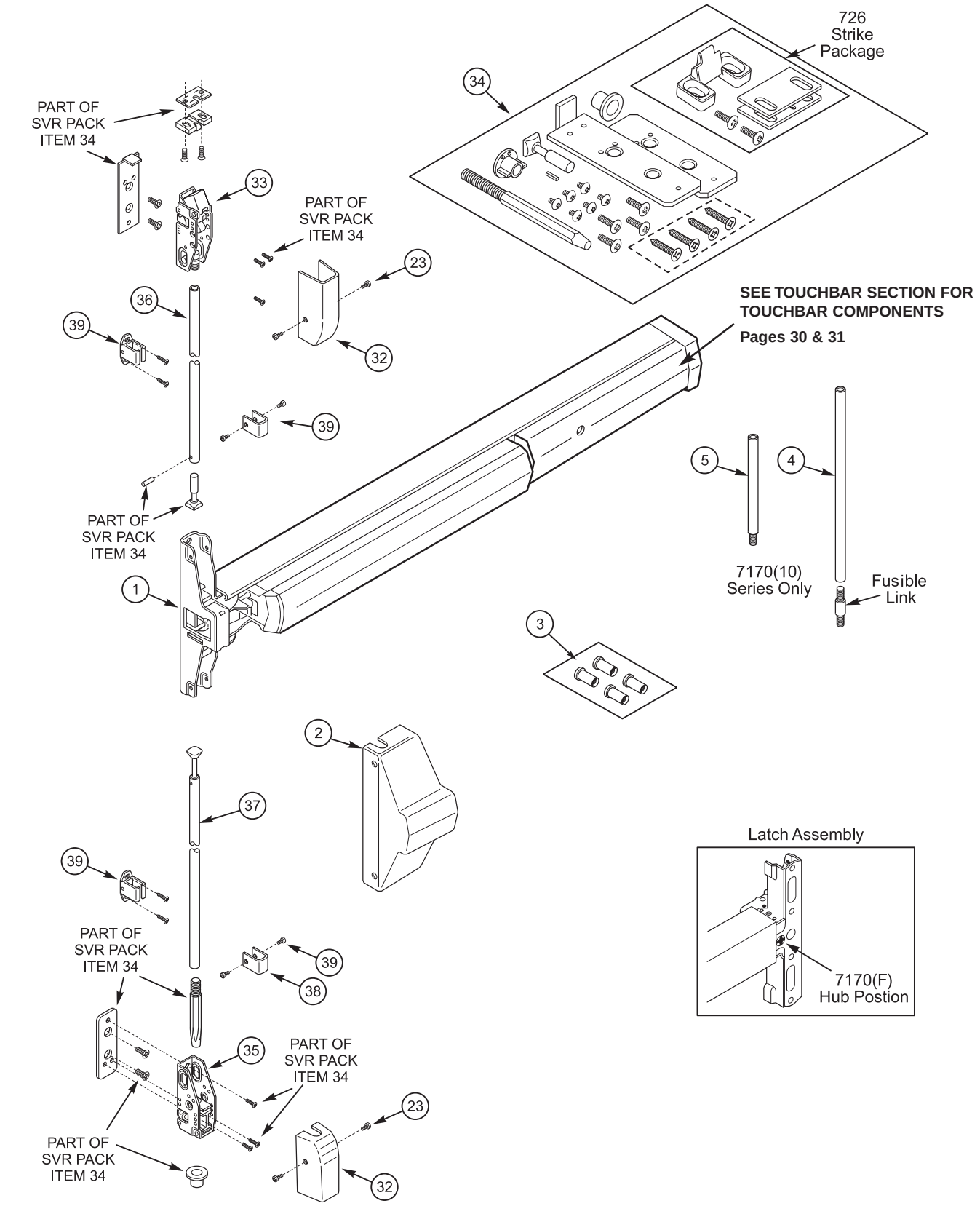

7170(F)(W)(10)LBR SURFACE VERTICAL ROD

(Less Bottom Rod)

ITEM	PART NO.	DESCRIPTION
1	60-7010-0360-048	Latch Assembly 7170, 7170F (Must Specify Hand)
2	60-7110-X003-FIN *Not Available*	Cover 7170 7170F UL
3	03-0080-5047-FIN	Sex Nut Pack (2), Fire Only
4	60-1510-0281-FIN	Rod Extension Assy., 24” (-10 Device Only)
5	60-1510-0278-FIN	Rod Extension Assy., 12” (-10 Device Only)
23	81-9500-1549-FIN	Screw Packet, Cover #8-32 x 5/16" UFPHMS (4)
32	60-7010-X040-FIN	Cover, Top & Latch
33	60-7010-0050-VEN	Top Latch, 7170(F)
33 (Optional)	60-7010-0055-999	Top Latch, 7170(F)ES Electric Strike

ITEM	PART NO.	DESCRIPTION
34	81-9500-1562-000	SVR Pack *Consists of the following:*
	60-7110-1005-048	Top Mtg. Plate
	60-7010-1067-048	Top Rod Connector
	99-9999-4308-999	Rod Connecting Pin
	60-1500-6150-999	Drill Jig
	81-9500-1613-000	Latch Mounting Screw Pack
	81-3111-0676-048	Latch Mounting Screw(2) (wood doors, panic)
	81-9500-1576-000	726 Top Strike Packet
36	60-7010-X052-FIN	Top Rod
39	81-9500-1514-FIN	Rod Guide Packet
55	81-9500-1584-000	Popper Packet [Fire Rated (F) Only]

7170(F)(W)(10)LBR SURFACE VERTICAL ROD

(Less Bottom Rod)

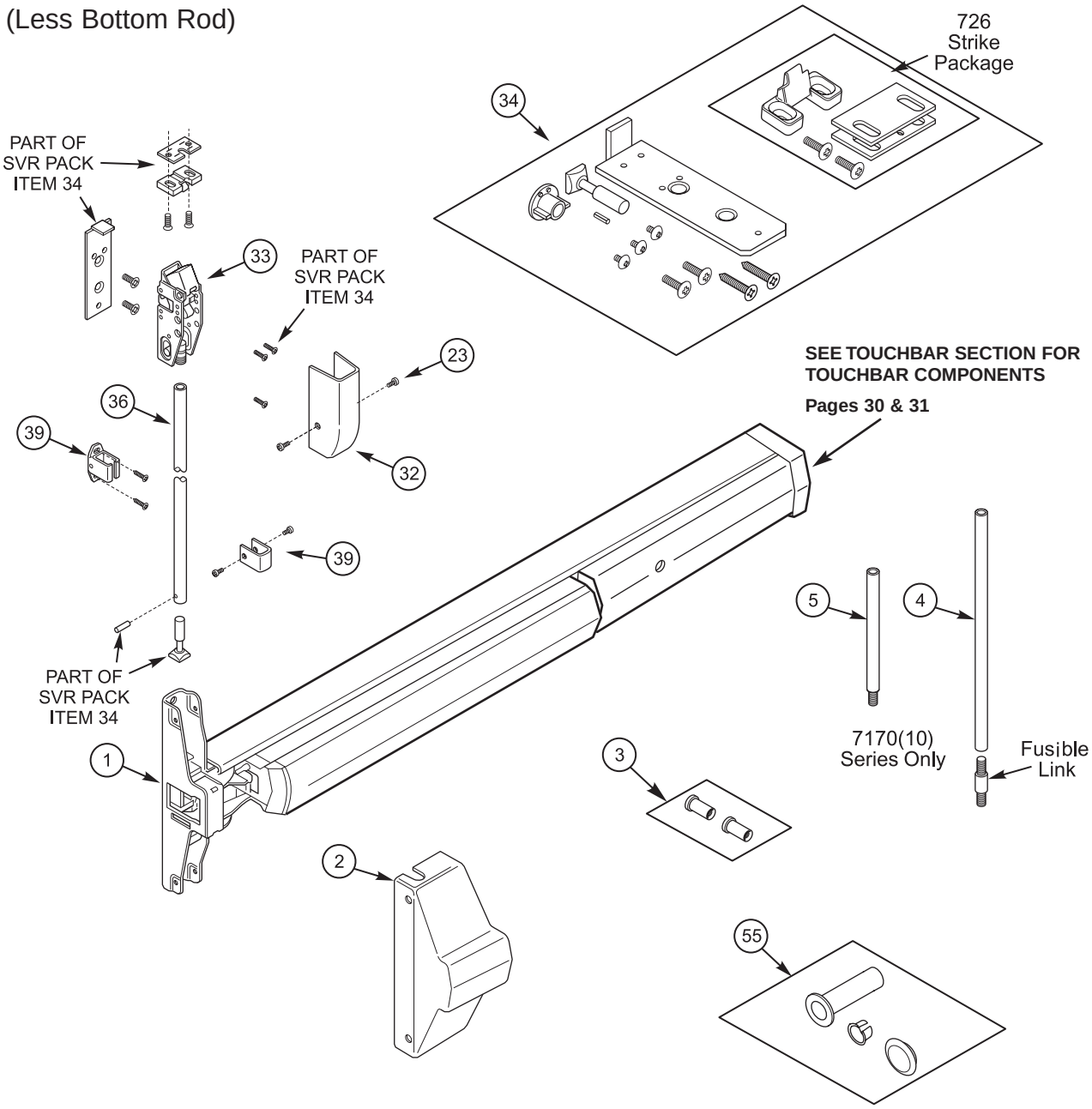

Latch Assembly

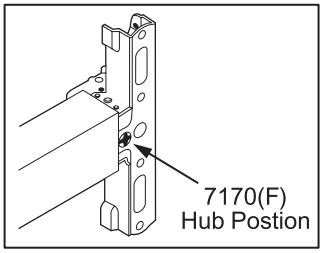

7120(F)/7220 CONCEALED VERTICAL ROD

ITEM	PART NO.	DESCRIPTION
1		Latch Case Assembly
	60-7020-0360-048	7120F (Must Specify Hand)
	60-7220-0354-048	7220 (Must Specify Hand)
2		Cover, Latch Assembly
	60-7000-X353-FIN	7200
	60-7100-X025-FIN	7120
	Not Available	7120F UL
35		Bottom Bolt Case
	60-7020-0058-048	7120
	60-7020-0055-048	7120F
	60-7220-0065-048	7220
36	60-7220-1019-048	Top Rod
46	81-9500-1456-000	CVR Pack for 7120 & 7220
		Consists of the following:
	60-7010-1046-059	Bolt
	60-7010-1055-200	Strike
	81-9500-1454-200	791 Top Strike Packet
	60-7220-1047-048	Pin, Rod Yoke (2)
	60-7140-1026-059	Set Screw, Yoke Pin
	99-9958-0045-999	Cotter Pin (5)
	99-9999-4526-999	Ring, Retaining (2)
	81-0014-0430-036	2” Temp Screw (2)
	81-9500-1548-036	Screw Pack

ITEM	PART NO.	DESCRIPTION
47		Top Latch & Bracket Assembly
	60-7020-0057-000	7120
	60-7020-0060-000	7120F
	60-7220-0066-048	7220
49	60-7020-0059-000	Bottom Rod & Coupler Assembly
51	60-7220-1025-048	Top Rod Tube
52	60-7220-0073-000	Arm & Bracket Assy(2)

7120(F)/7220 CONCEALED VERTICAL ROD

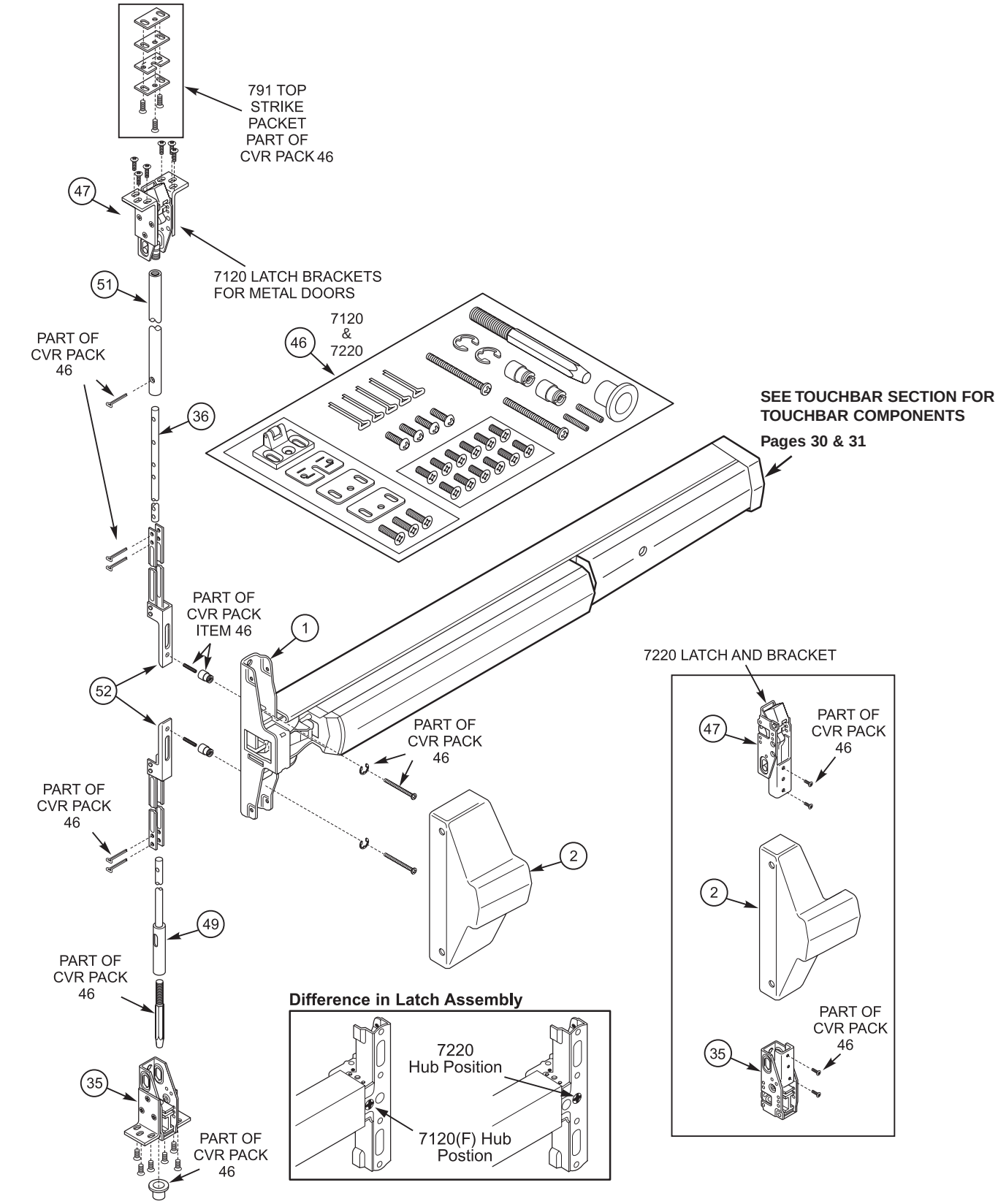

7220M(F) CONCEALED VERTICAL ROD

ITEM	PART NO.	DESCRIPTION
1		Latch Assembly
	60-7220-0354-048	7220M(F) (Must Specify Hand)
2		Cover, Latch Assembly
	60-7100-X025-FIN	7220M(F)
	Not Available	7220MF UL
35		Bottom Bolt Case
	60-7020-0055-048	7220M
	60-7020-0058-048	7220M(F)
36	60-7220-1019-048	Top Rod
46	81-9500-1456-000	CVR Pack
		Consists of the following:
	60-7010-1046-059	Bolt
	60-7010-1055-200	Strike
	81-9500-1454-200	791 Top Strike Packet
	60-7220-1047-048	Pin, Rod Yoke (2)
	60-7140-1026-059	Set Screw, Yoke Pin
	99-9958-0045-999	Cotter Pin (5)
	99-9999-4526-999	Ring, Retaining (2)
	81-9500-1548-058	Screw Pack
	81-0014-0430-036	2” Temp Screw (2)

ITEM	PART NO.	DESCRIPTION
47		Top Latch & Bracket Assembly
	60-7020-0057-000	7220M
	60-7020-0060-000	7220M(F)
49	60-7020-0059-000	Bottom Rod & Coupler Assembly
51	60-7220-1025-048	Top Rod Tube
52	60-7220-0073-000	Arm & Bracket Assy (2)

7220M(F) CONCEALED VERTICAL ROD

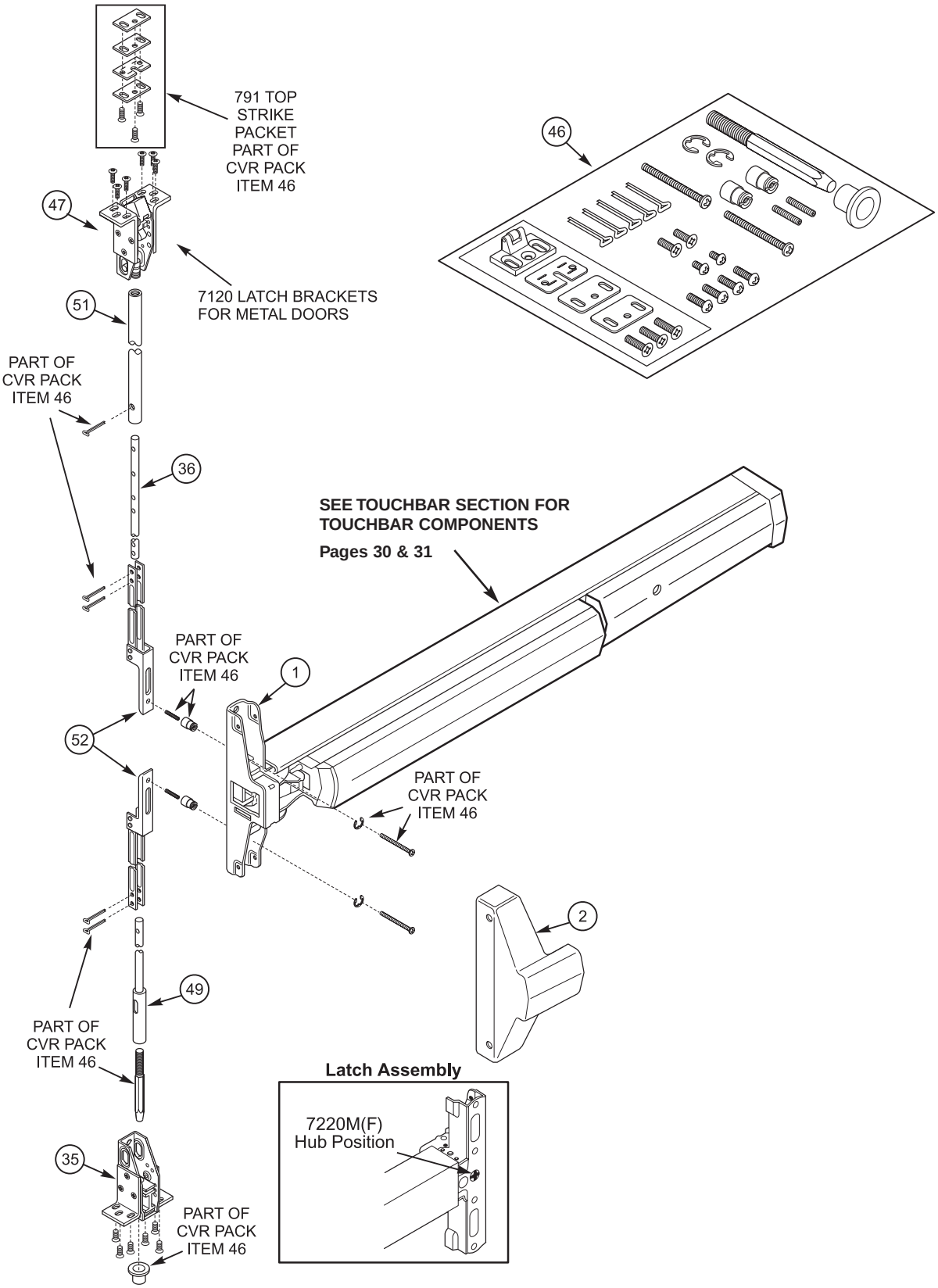

7160(F)(W)(10) CONCEALED VERTICAL ROD

ITEM	PART NO.	DESCRIPTION
1		Latch Case Assembly
	60-7020-0360-048	7160(F) (Specify Hand)
2		Cover, Latch Assembly
	60-7100-X025-FIN	7160
	Not Available	7160F UL
35	60-7020-0055-048	Bottom Bolt Case, 7160F
36	60-7220-1019-048	Top Rod
37		Rod Extension Assembly
	60-1510-0282-000	12” Rod Assembly
	60-1510-0281-000	24” Rod Assembly

ITEM	PART NO.	DESCRIPTION
46	81-9500-1581-000	CVR Pack
		Consists of the following:
	60-7010-1046-059	Bolt
	60-7010-1055-200	Strike
	60-7160-1004-999	761 Top Strike Packet
	60-7120-1047-048	Pin, Rod Yoke (2)
	60-7140-1026-059	Set Screw, Yoke Pin
	60-7020-1064-059	Yoke Pin Spacer (2)
	99-9958-0045-999	Cotter Pin (5)
	99-9999-4526-999	Ring, Retaining (2)
	81-9500-1580-058	Screw Pack
	81-0014-0430-036	2” Temp Screw (2)
47	60-7160-0060-000	Top Latch & Bracket Assembly, 7160F
47 (optional)	60-7010-0055-999	Top Latch, 7160(F)ES Electric Strike
49	60-7020-0059-000	Bottom Rod & Coupler Assembly
51	60-7220-1025-048	Top Rod Tube
52	60-7160-0006-048	Arm & Bracket Assy. (2)

7160(F)(W)(10) CONCEALED VERTICAL ROD

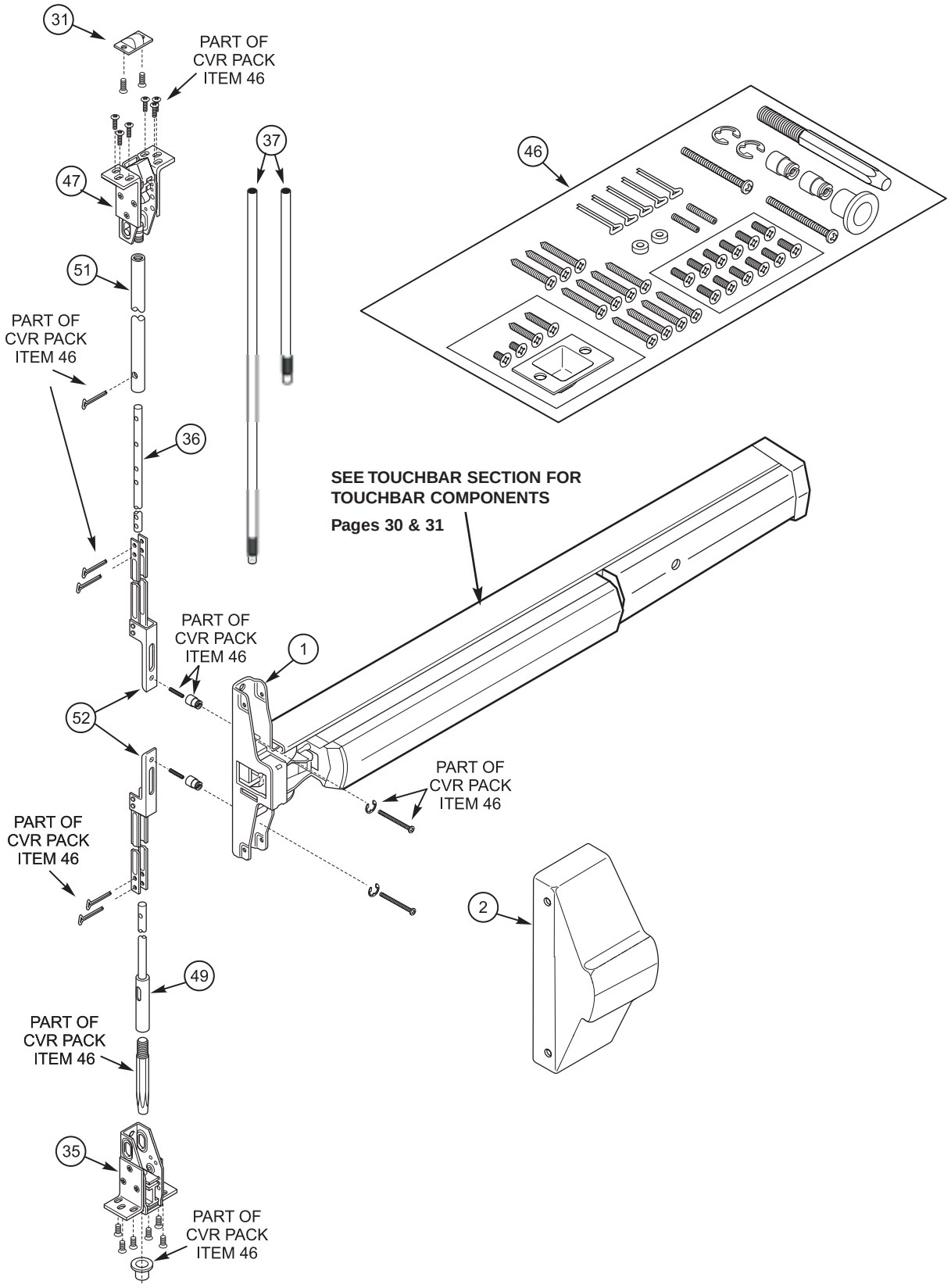

7160(F)(W)(10)LBR CONCEALED VERTICAL ROD

(Less Bottom Rod)

ITEM	PART NO.	DESCRIPTION
1		Latch Case Assembly
	60-7020-0360-048	7160(F) (Specify Hand)
2		Cover, Latch Assembly
	60-7100-X025-FIN	7160
	Not Available	7160F UL
36	60-7220-1019-048	Top Rod
37		Rod Extension Assembly
	60-1510-0282-000	12” Rod Assembly
	60-1510-0281-000	24” Rod Assembly

ITEM	PART NO.	DESCRIPTION
46	81-9500-1605-000	CVR Pack *Consists of the following:*
	60-7160-1004-999	761 Top Strike Packet
	60-7120-1047-048	Pin, Rod Yoke (2)
	60-7140-1026-059	Set Screw, Yoke Pin
	60-7020-1064-059	Yoke Pin Spacer (2)
	99-9958-0045-999	Cotter Pin (5)
	99-9999-4526-999	Ring, Retaining (2)
	81-0011-0512-058	Screw, 10-24 x 1/2 FHM-PH (14)
	81-0014-0430-036	8x32x2 Temp Screw (1)
47	60-7160-0060-000	Top Latch & Bracket Assembly, 7160F
47 (Optional)	60-7010-0055-999	Top Latch, 7160(F)ES Electric Strike
51	60-7220-1025-048	Top Rod Tube
52	60-7160-0006-048	Arm & Bracket Assembly
55	81-9500-1584-000	Popper Pack (Fire Rated Only)

7160(F)(W)(10) LBR CONCEALED VERTICAL ROD

(Less Bottom Rod)

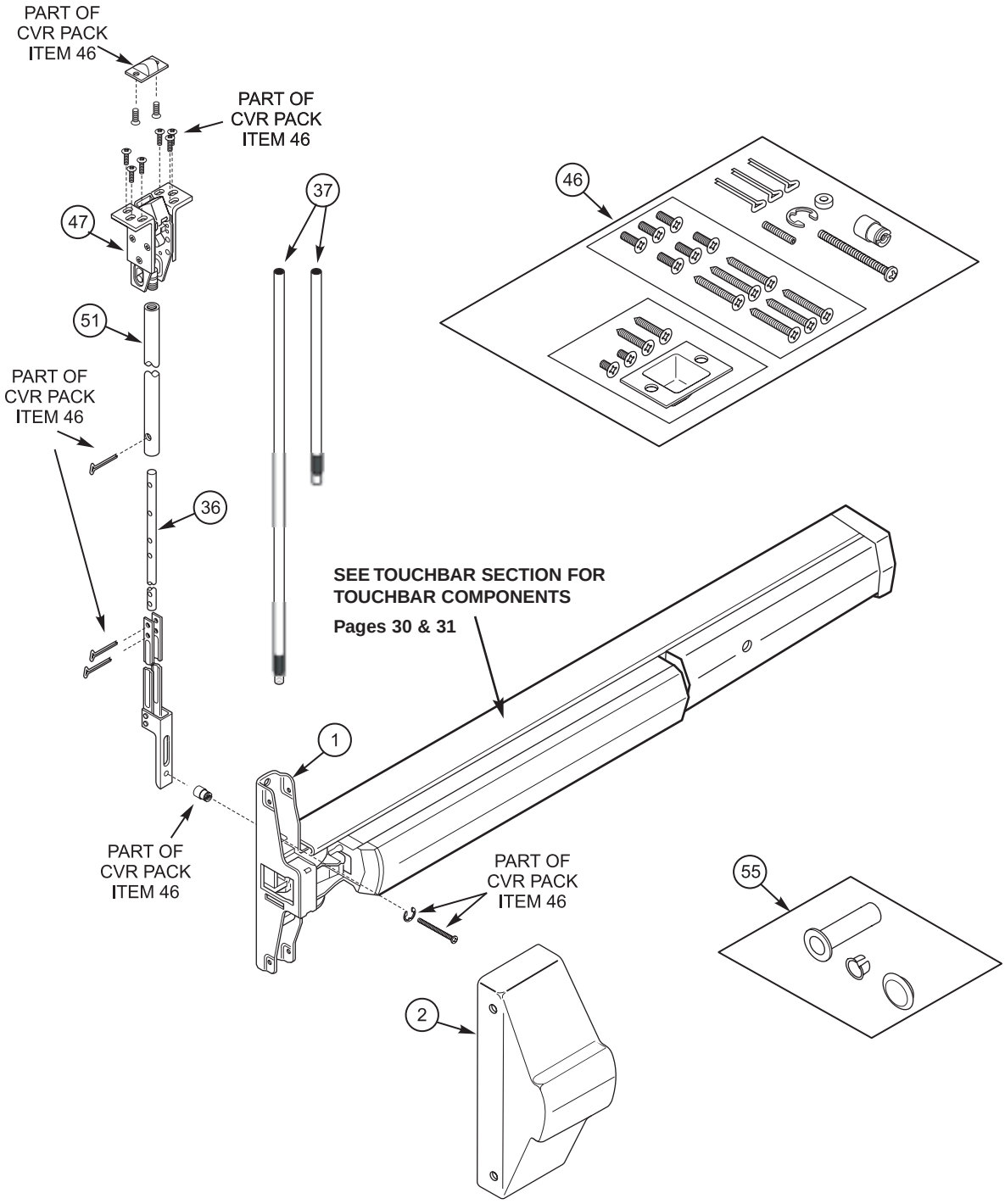

7130(F) MORTISE EXIT DEVICE

ITEM	PART NO.	DESCRIPTION
1	60-7030-0382-048	Latch Assembly
2		Cover
	60-7100-X025-FIN	7130
	Not Available	7130F UL
42		Mortise Lock Body
		Specify Hand
	60-7030-0384-048	7130-T8
	60-7030-0385-048	7130-T8F
	60-7030-0386-048	7130-K5
	60-7030-0387-048	7130-K5F
	60-7030-0388-048	7130-K8
	60-7030-0389-048	7130-K8F
	60-7030-0390-048	7130-L5
	60-7030-0391-048	7130-L5F
	60-7030-0392-048	7130-L8
	60-7030-0393-048	7130-L8F

ITEM	PART NO.	DESCRIPTION
43	60-0000-1159-FIN	Armored Front and Mounting Pack
		Consists of the following:
	60-7030-X049-FIN	Armored Front
	81-0022-0404-FIN	Screw, 8-32 x 1/4 UFPHMS (2)
	81-2012-0620-059	Screw, #12/12-24 Comb.UFPHMS (2)
45	81-9500-0562-200	798 Strike Packet

7130(F) MORTISE EXIT DEVICE

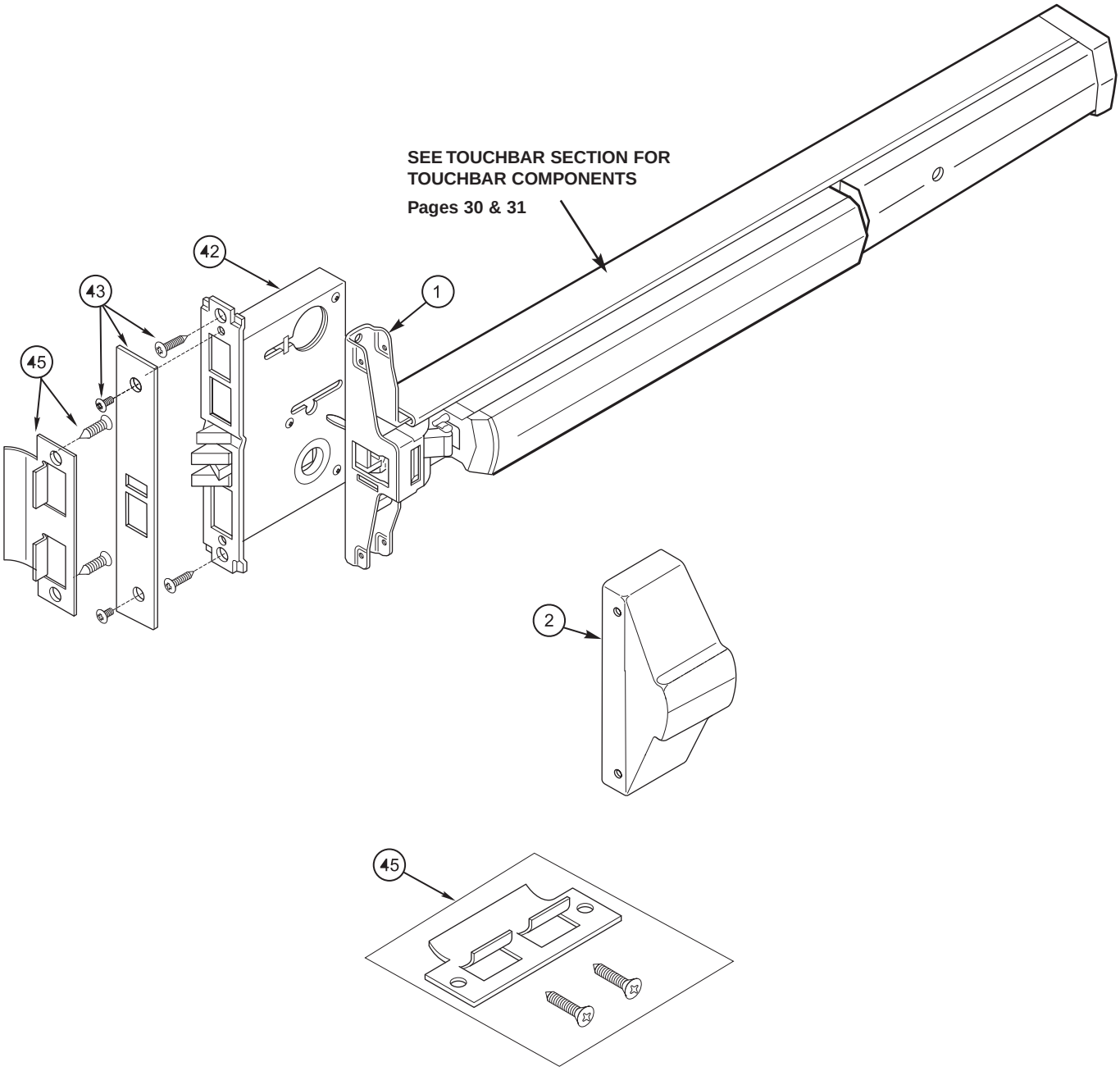

720DB RIGID BAR

ITEM	PART NO.	DESCRIPTION
4	60-7200-X066-FIN	Bottom Rail, 48"
5	60-7200-X068-FIN	Cover
7	60-7000-1336-999	Carrier Bar
11	60-7000-X360-FIN	End Cap
21	81-9500-0613-FIN	Device Mounting Pack
		Consists of the following:
	60-7000-1423-048	End Clamp (2)
	60-7000-1349-048	Screw, 1/4-20 X 1 PPHMS (4)
	81-9500-1547-FIN	Screw Packet, Cover (6)

720DB RIGID BAR

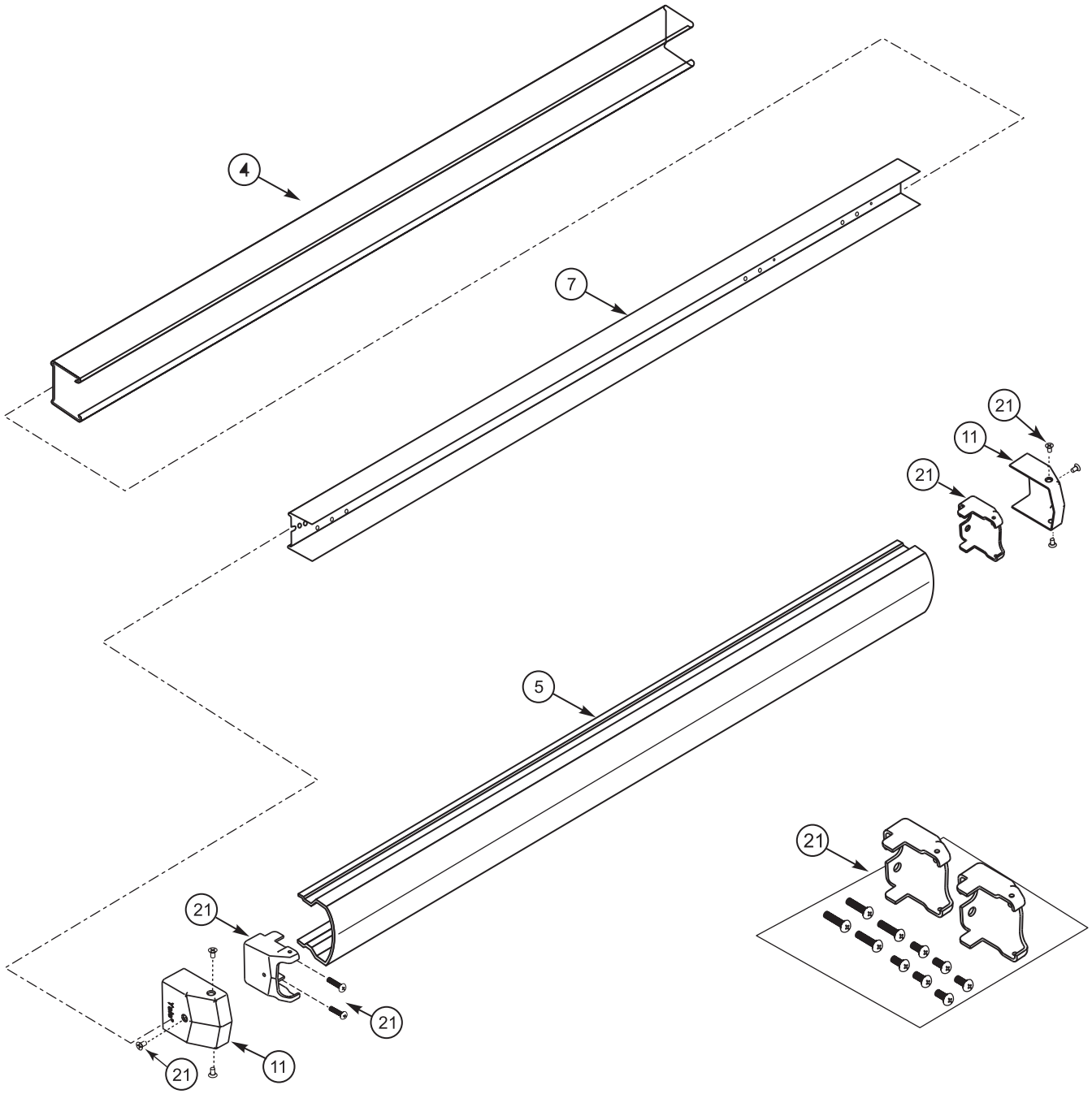

TOUCHBAR

ITEM	PART NO.	DESCRIPTION
1		Latch Case Assembly *(Reversible) Specify Hand*
	60-7000-0419-048	7100
	60-7000-0425-048	7100F
	60-7200-0354-048	7200, 7200M
	60-7200-0362-048	7200MF
	60-7150-0005-048	7150, 7150F
	60-7250-0001-048	7250, 7250M(F)
	60-7010-0360-048	7110(F), 7170(F)
	60-7210-0354-048	7210, 7210M(F)
	60-7020-0360-048	7120(F), 7160(F), 7140(F)
	60-7220-0354-048	7220, 7220M(F)
	60-7030-0382-048	7130(F) *(Includes Trim Slide)*
2		*Cover, Latch Assembly
	60-7100-X026-FIN	7100
	60-7000-X111-FIN	7200, 7200M
	60-7150-X001-FIN	7150
	60-7250-X001-FIN	7250, 7250M
	60-7110-X003-FIN	7110, 7170
	60-7110-X003-FIN	7210, 7210M
	60-7100-X025-FIN	7120, 7160, 7130
	60-7100-X025-FIN	7220, 7220M
3		Bottom Rail
	60-7000-X079-FIN	36" 7100 Series
	60-7200-X058-FIN	36" 7200 Series
	60-7200-X066-FIN	48" 7100/7200 Series
5		Bar & Carrier Assembly
	60-7000-0423-000	36" 7100 Series
	60-7200-0356-000	36" 7200 Series
	60-7000-0424-000	48" 7100/7200 Series
6		Cover, Bar
	60-7000-X083-FIN	36"
	60-7000-X084-FIN	48"
7		Cover, End
	60-7000-X359-FIN	36" std. 7100 Series
	60-7000-X362-FIN	36" 7100 Series Cylinder Dogging
	60-7200-X360-FIN	36" std. 7200 Series
	60-7200-X363-FIN	36" 7200 Series Cylinder Dogging
	60-7200-X361-FIN	All 48" std.
	60-7200-X364-FIN	All 48" Cylinder Dogging
8	60-7000-0256-200	Touch Pad Cap, Front
9	60-7000-6073-200	Touch Pad Cap, Rear

ITEM	PART NO.	DESCRIPTION
10	60-7000-9088-999	Bar Cap, Black Nylon
11	60-7000-X360-FIN	End Cap
12	60-7200-9216-999	Trim Slide (All except Mortise)
13	60-7000-1320-048	Trim Slide Retainer
14		Dogging Assembly
	60-7000-0406-048	Standard Hex Key Dog.
	60-7000-0407-048	Cylinder, Dogging
15	60-7000-1131-036	Dogging Key (5/32" hex)
16	99-9999-4123-999	Dogging Hole Plug
17	60-7000-2421-000	Cylinder Nut
18	60-2000-6153-082	Cylinder Spacer Sleeve
19		Collar, Dogging Cylinder
	None Required	1-1/8" Cylinder
	10-1765-X007-FIN	1-1/4" Cylinder
	10-1765-X012-FIN	1-1/2" Cylinder
20	As Ordered	Dogging Cylinder (Mortise)
21	81-9500-0605-FIN	End Clamp Packet *Consists of the following:*
	60-7000-1423-048	End Clamp
	60-7000-1324-048	Mounting Screws (4)
	60-7000-1131-036	Hex Dogging Key (Except Fire Rated)
	81-9500-1547-FIN	Cover Screw Packet (6)
22	60-7000-1391-999	Screw, Touch Bar Caps, Torx Cap #6-32 x 3/4" (4)
23	81-9500-1547-FIN	Screw Packet, Cover #8-32 x 5/16" FHUM-PH (4)
24	81-4414-0514-048	Screw, Dogging Assy., #10-24 x 5/8" PHT-T-PN (2)
25	81-3711-0412-048	Screw, Trim Slide, #8-32 x 1/2" FHT-PH
26	81-4014-0404-048	Screw, Latch Head to Carrier, #8-32 x 1/4" PHT-C-PH (2)
28	03-0080-5047-FIN	Sex Nut Packet (4) Fire-rated Devices incl.
54	81-3714-0508-036	Screw, #10-24 x 3/8 PPHM (4)

*Covers which bare the UL Listing mark for Fire-Rating cannot be shipped with that marking. Therefore, covers for Fire-Rated Latch Case Assemblies are not available.

TOUCHBAR

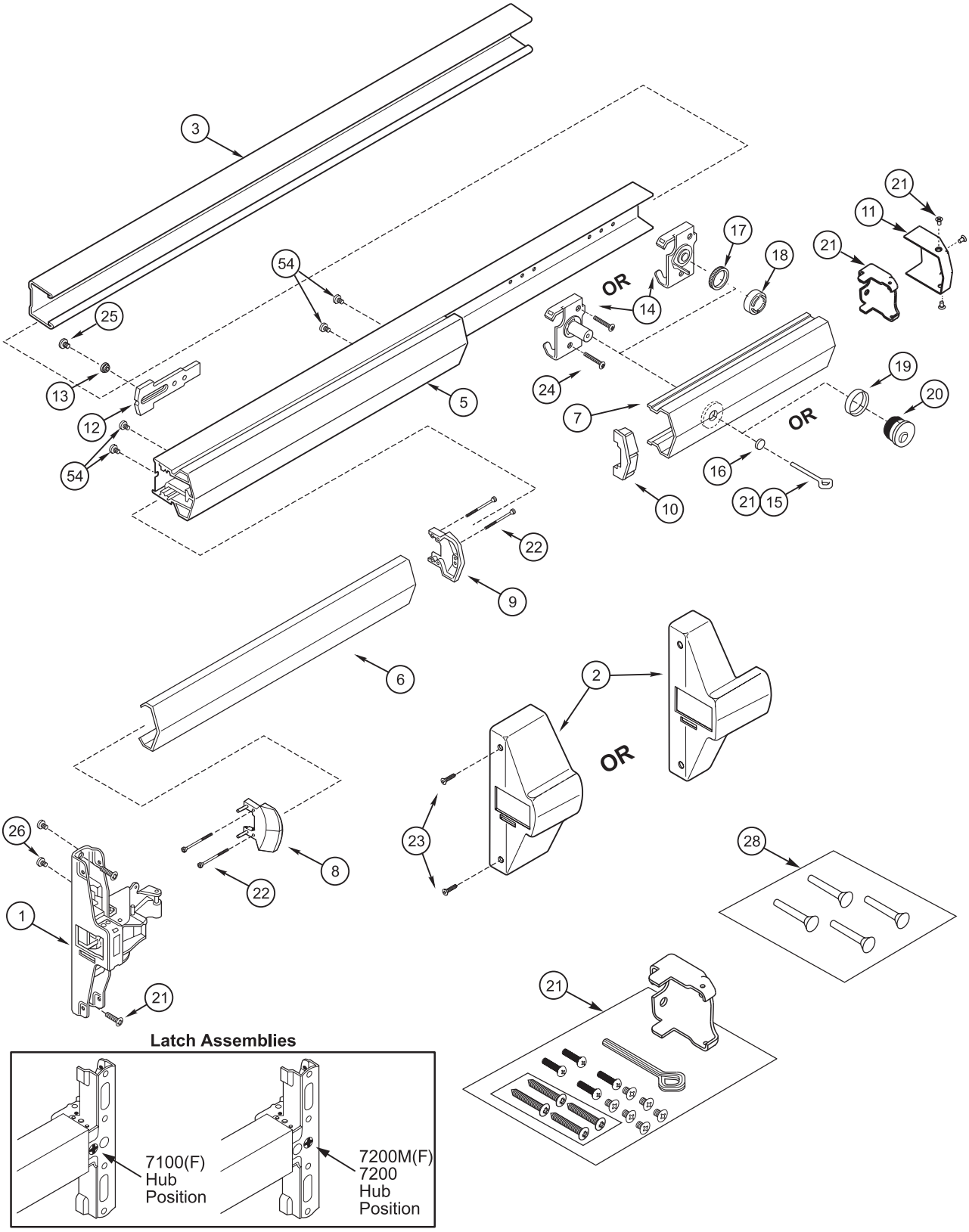
3
54
25
13
12
54
5
21
11
17
18
21
OR
14
24
7
19
20
OR
16
10
21
15
22
9
6
2
OR
23
26
8
22
1
21
28
21
Latch Assemblies
7100(F)
Hub
Position
7200M(F)
7200
Hub
Position

626F, 628F, 629F TRIM

ITEM	PART NO.	DESCRIPTION
1	60-7000-0612-FIN 60-7000-0615-FIN	Escutcheon Assembly 626F 628F, 629F
2	*See Chart page 70*	Lever
3	*See Chart page 71*	Cylinder, Rim
4	*See Chart page 71*	Cylinder Collar
5	60-7000-0215-000	Housing & Cam Assy.
6	60-7000-1235-048	Screw, Cylinder Mounting (2)
7	81-0016-2200-999	Screw, 55/59 Function
8	60-7000-0046-000	Driver Gear Assembly
9	81-4414-0308-036	Screw, Tailpiece Plate, #6 x 3/8", PHT-T-PH (2)
10	60-7000-0216-059 60-7000-0217-059	Tailpiece Assembly 1-3/4" Door Without Shim Kit 2" - 2-1/4" Door or Std. Door with Shim Kit
11	60-7000-1328-048 60-7000-1011-059	Gear, Drive Lever (626F and 628F) Rigid Lever (629F)
12	60-7000-6217-082	Hub, Lever

ITEM	PART NO.	DESCRIPTION
14	99-9958-0047-999	Cotter Pin
15	99-9999-3516-999	Nut, Spindle
16	60-7000-9001-999	Thimble Insert, Nylon (Levers) *Not Shown*
17	81-9500-1476-FIN 81-0013-0670-FIN 99-9999-7156-FIN	Screw Packet, Mtg. *Consists of the following:* Screw, 1/4-20 x 1 OPHMS (2) Washer, #14 Finish (2)
18	60-7000-1224-999 60-7000-1225-999 60-7000-1234-999	Spring, Grip Return (not shown) Levers, RHR (blue) Levers, LHR (red) Knob
19	60-7000-1306-999	Spring (not shown) Under Tailpiece
20	60-7000-1305-059	Hex Nut / Bushing for Spring (not shown)
21	60-7000-1236-059	Washer Under Tailpiece (not shown) (2)

626F, 628F, 629F TRIM

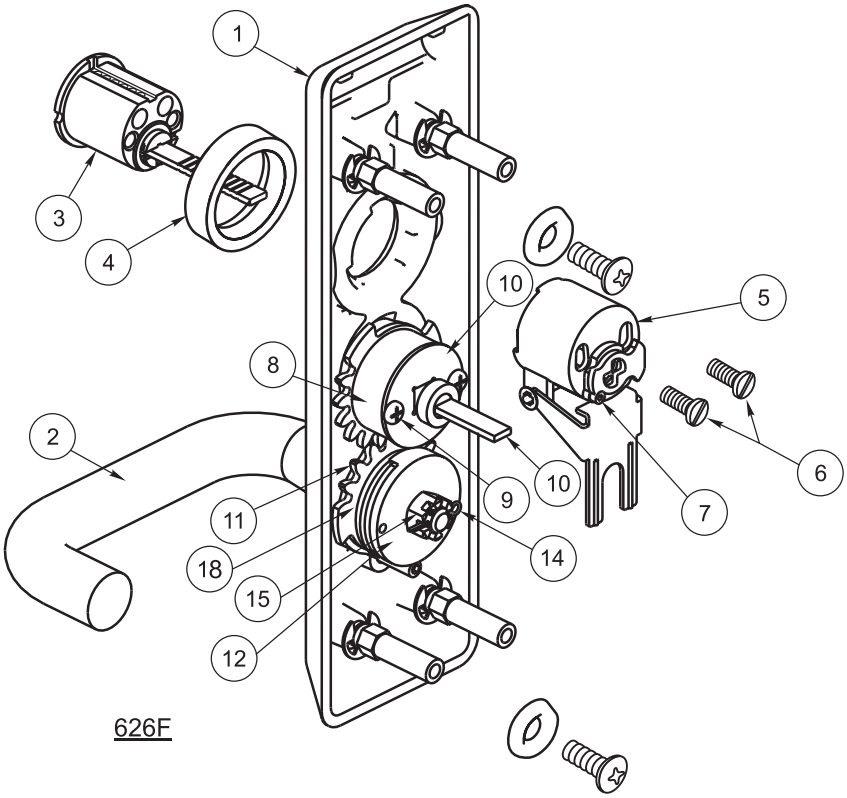

626F

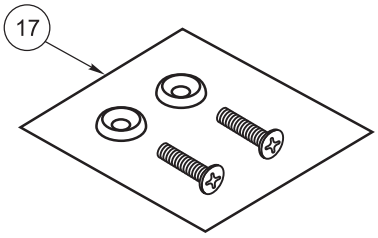

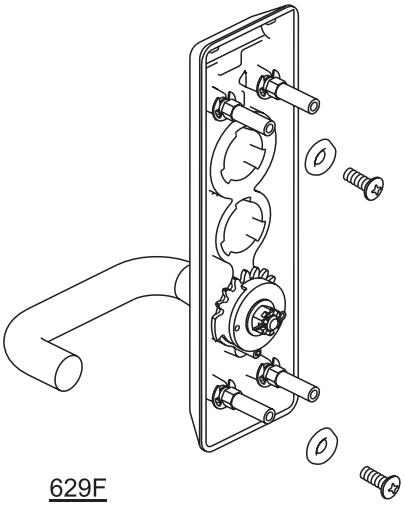

629F

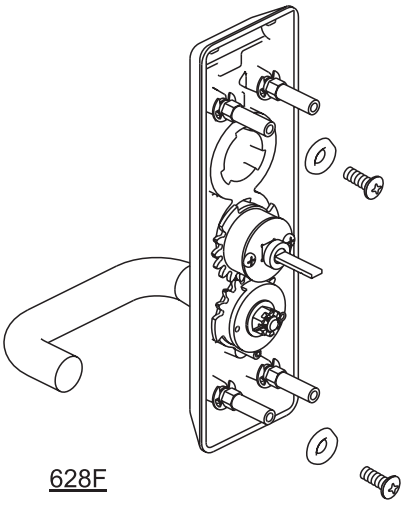

628F

(DT) Rigid Lever	(Passage) Active Lever or (DT) Free Wheeling Lever*	Cylinder Controls Lever	Access by Key and Lever
F02	**--**	**F08**	**F09**
629F	628F	626F	626F

627F TRIM

ITEM	PART NO.	DESCRIPTION
1	60-7000-0612-FIN	Escutcheon Assy. 627F
2	*See Chart page 70*	Lever
3	*See Chart page 71*	Cylinder, Rim
5	60-2000-6206-082	Housing, Cylinder
6	60-7000-1235-048	Screw, Cylinder Mounting (2)
11	60-7000-1011-059	Gear, Drive
12	60-7000-6217-082	Hub, Lever
14	99-9958-0047-999	Cotter Pin

ITEM	PART NO.	DESCRIPTION
15	99-9999-3516-999	Nut, Spindle
16	60-7000-9001-999	Thimble Insert, Nylon (Levers) *Not Shown*
17	81-9500-1476-FIN	Screw Packet, Mtg. *Consists of the following:*
	81-0013-0670-FIN	Screw, 1/4-20 x 1 OPHMS (2)
	99-9999-7156-FIN	Washer, #14 Finish (2)

627F TRIM

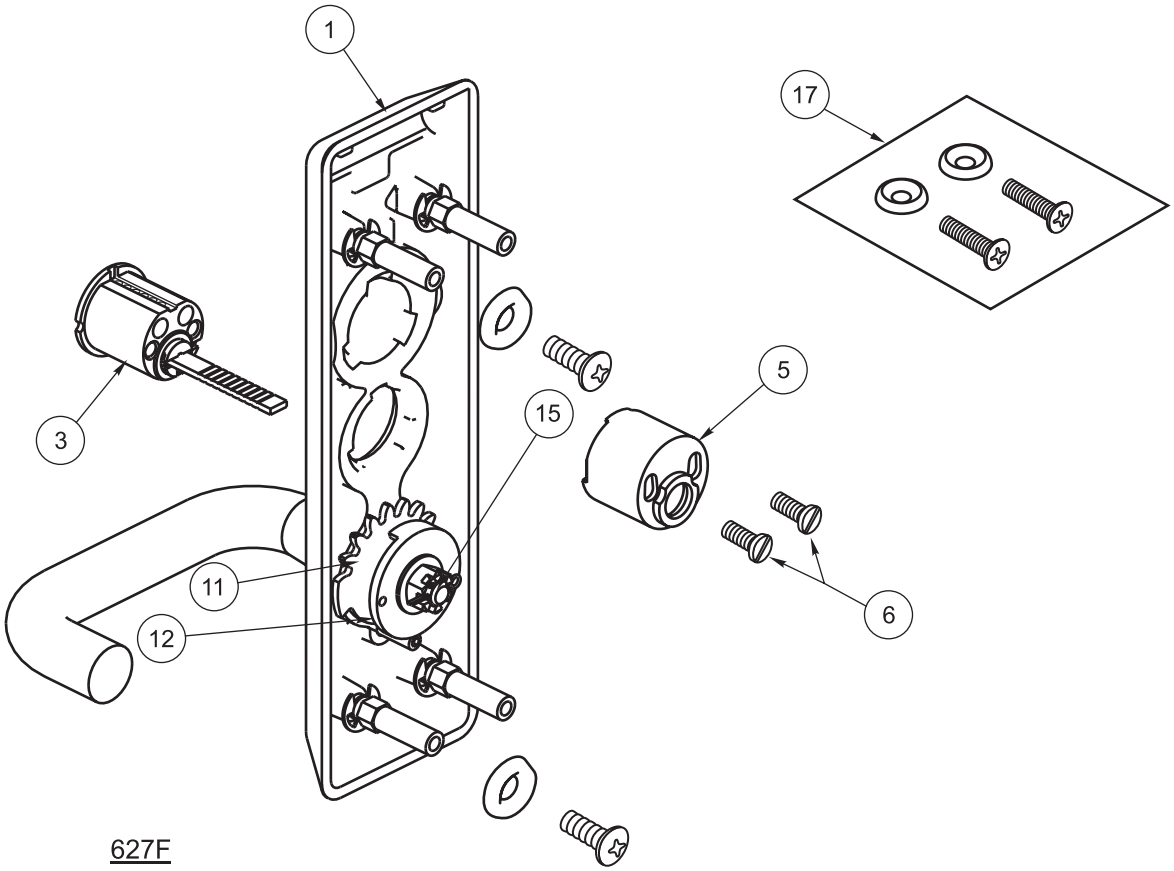

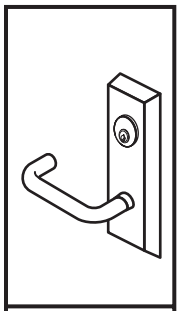

Access by Key
F03
627F

656F, 658F TRIM PARTS LIST

ITEM	PART NO.	DESCRIPTION
1		Escutcheon Assembly
	60-7030-0395-FIN	Cylinder x Lever 656F
	60-7030-0394-FIN	Blank x Lever 658F
2	*See Chart page 70*	Lever
3	*See Chart Page 71*	Cylinder, Mortise
4	*See Chart Page 71*	Collar, Cylinder
15	99-9999-3440-999	Nut, Spindle
16	60-7000-9001-999	Thimble Insert, Nylon (Levers) *Not Shown*

ITEM	PART NO.	DESCRIPTION
17	81-9500-1476-FIN	Screw Packet, Mtg. *Consists of the following:*
	81-0013-0670-FIN	Screw, 1/4-20 x 1 OPHMS (2)
	99-9999-7156-FIN	Washer, #14 Finish (2)
23	60-7030-1065-059	Washer, Spindle

656F, 658F TRIM COMPONENTS

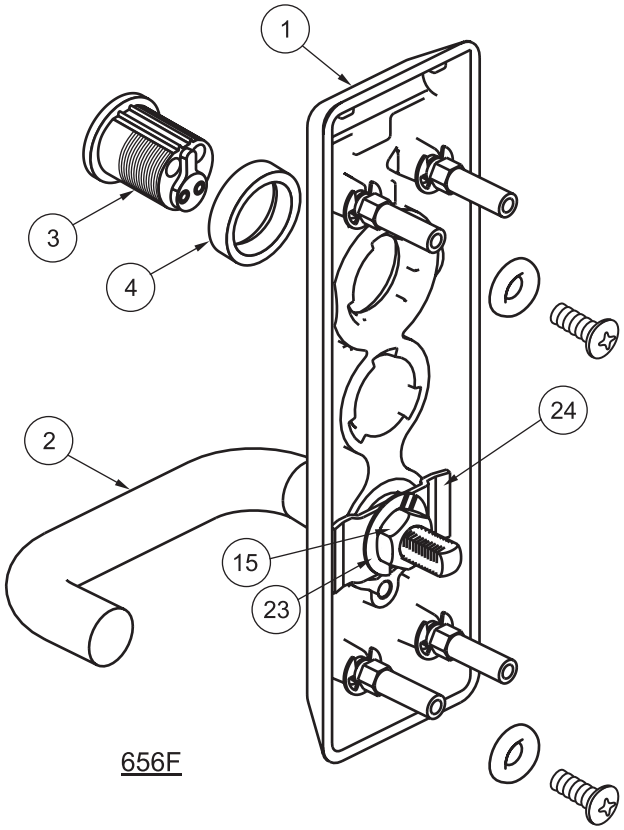

656F

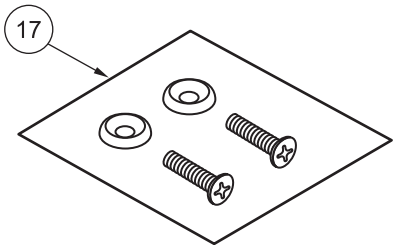

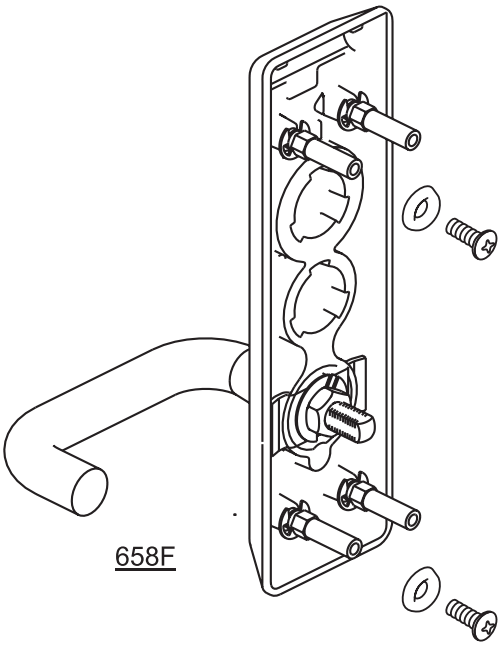

658F

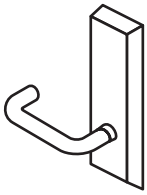		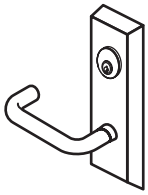	
(DT) Rigid Lever	**(Passage) Active Lever or (DT) Free Wheeling Lever***	**Cylinder Controls Lever**	**Access by Key and Lever**
F02	**--**	**F08/F09**	**F03**
658F	658F	656F	556F

620F, 621F, 651 TRIM

ITEM	PART NO.	DESCRIPTION
1		Escutcheon Assembly
	60-7000-0614-FIN	621F
	60-7000-0648-FIN	620F
	60-7030-0193-FIN	651F
3	*See Chart Page 71*	Cylinder, Rim or Mortise
4	*See Chart Page 71*	Collar, Cylinder 651F
5	60-2000-6206-082	Housing, Cylinder 621F

ITEM	PART NO.	DESCRIPTION
6	60-7000-1235-048	Screw, Cylinder 621F Mounting (2)
17	81-9500-1476-FIN	Screw Packet, Mtg. *Consists of the following:*
	81-0013-0670-FIN	Screw, 1/4-20 x 1 OPHMS (2)
	99-9999-7156-FIN	Washer, #14 Finish (2)

620F, 621F, 651 TRIM

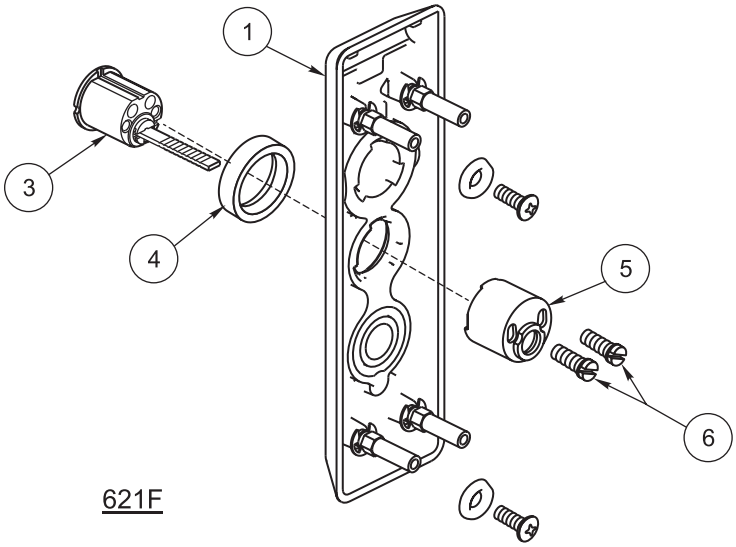

621F

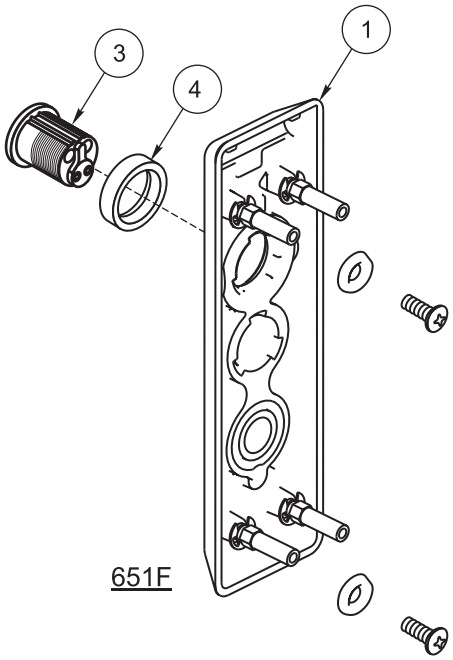

651F

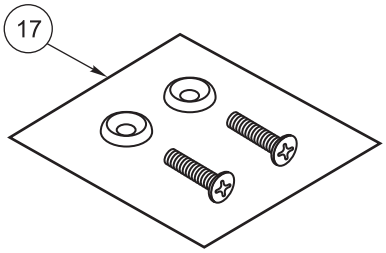

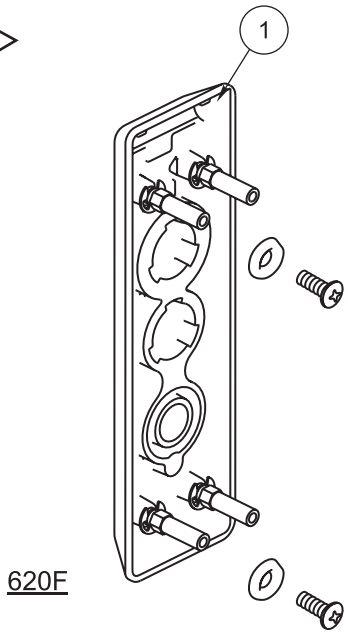

620F

(EO) Blank Plate	(NL) Access by Key	(NL) Access by Key
F01	**F03**	**F07**
620F	621F	
620F		651F

522F, 524F, 525F, 526F, 528F, 529F TRIM

ITEM	PART NO.	DESCRIPTION
1	60-7000-0414-FIN 60-7000-0415-FIN	Escutcheon Assembly 522F, 526F 524F, 525F, 528F, 529F
2	*See Chart page 70*	Lever
2	*See Chart page 70*	Knob
3	*See Chart Page 71*	Cylinder, Rim
4	*See Chart Page 71*	Cylinder Collar
5	60-7000-0215-000	Housing & Cam Assy.
6	60-7000-1235-048	Screw, Cylinder Mounting (2)
7	81-0016-2200-999	Screw, NL Function
8	60-7000-0046-000	Driver Gear Assembly
9	81-4414-0308-036	Screw, Tailpiece Plate, #6 x 3/8", PHT-T-PH (2)
10	60-7000-0216-059 60-7000-0217-059	Tailpiece Assembly 1-3/4" Door Without Shim Kit 2" - 2-1/4" Door or Std. Door with Shim Kit
11	60-7000-1328-048 60-7000-1011-059	Gear, Drive Lever Rigid Lever

ITEM	PART NO.	DESCRIPTION
12	60-7000-6217-082	Hub, Lever
14	99-9958-0047-999	Cotter Pin
15	99-9999-3516-999	Nut, Spindle
16	60-7000-9001-999	Thimble Insert, Nylon (Levers) *Not Shown*
17	81-9500-1476-FIN 81-0013-0670-FIN 99-9999-7156-FIN	Screw Packet, Mtg. *Consists of the following:* Screw, 1/4-20 x 1 OPHMS (2) Washer, #14 Finish (2)
18	60-7000-1224-999 60-7000-1225-999 60-7000-1234-999	Spring, Grip Return (not shown) Levers, RHR (blue) Levers, LHR (red) Knob
19	60-7000-1306-999	Spring (not shown) Under Tailpiece
20	60-7000-1305-059	Hex Nut / Bushing for Spring (not shown)
21	60-7000-1236-059	Washer Under Tailpiece (not shown)
49	60-7000-X055-FIN	Thimble (not shown) Levers & Knobs

522F, 524F, 525F, 526F, 528F, 529F TRIM

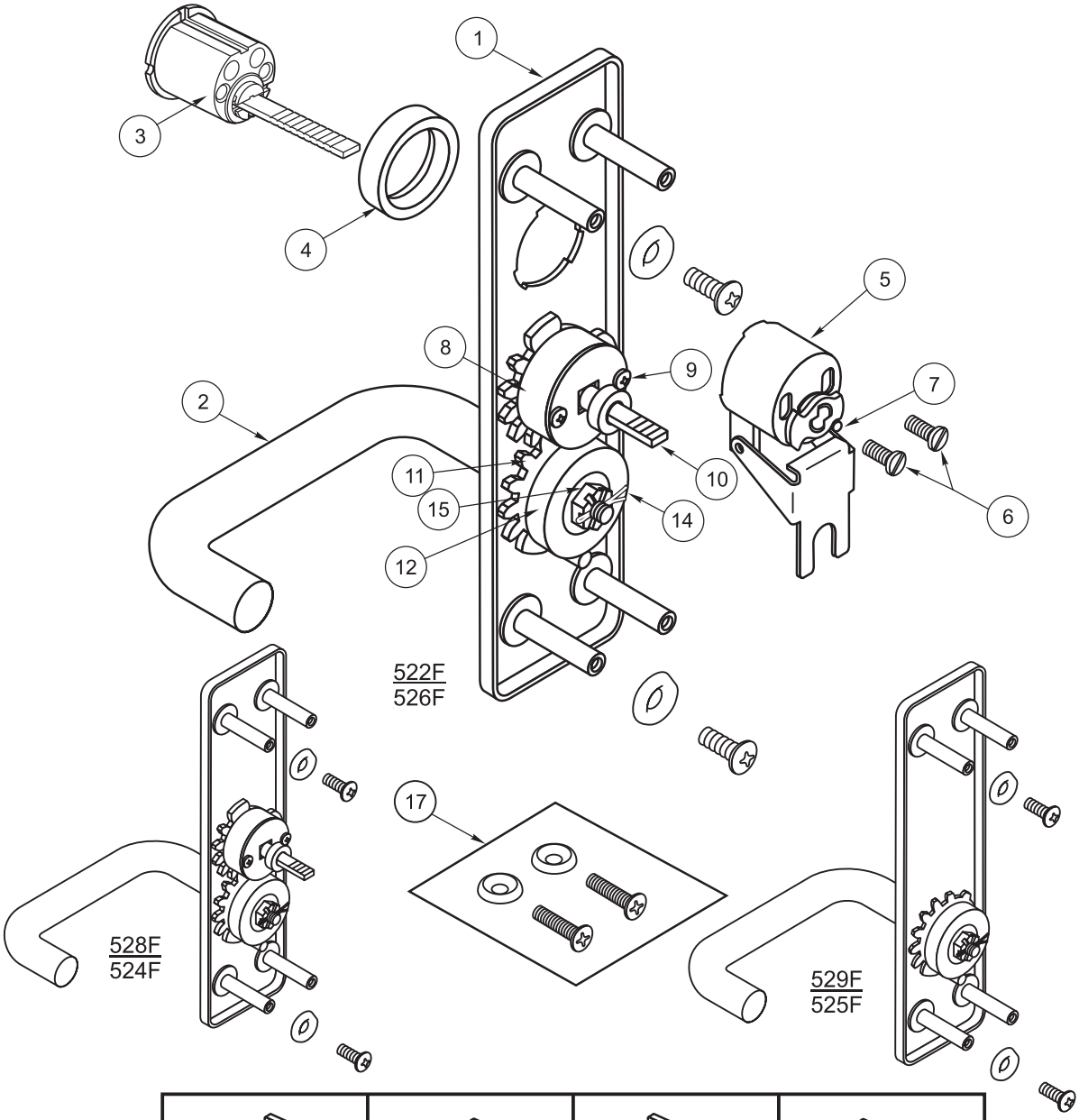

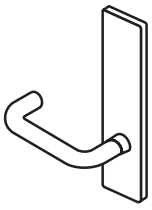		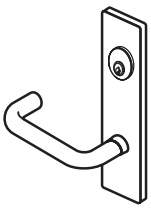					
(DT) Rigid Lever	**(Passage) Active Lever or (DT) Free Wheeling Lever***	**Cylinder Controls Lever**	**Access by Key and Lever**	**(DT) Rigid Knob**	**(Passage) Active Knob**	**Cylinder Controls Knob**	**Access by Key and Knob**
F02	--	**F08**	**F09**	**F02**	–	**F08**	**F09**
529F	528F	526F	526F	525F	524F	522F	522F

523F, 527F TRIM

ITEM	PART NO.	DESCRIPTION
1	60-7000-0414-FIN	Escutcheon Assembly
2	*See Chart Page 70*	Lever
2	*See Chart page 70*	Knob
3	*See Chart Page 71*	Cylinder, Rim
4	*See Chart Page 71*	Collar, Rim Cylinder
5	60-2000-6206-082	Housing, Cylinder

ITEM	PART NO.	DESCRIPTION
11	60-7000-1011-059	Gear, Drive
12	60-7000-6217-082	Hub, Lever
14	99-9958-0047-999	Cotter Pin
15	99-9999-3516-999	Nut, Spindle
17	81-9500-1476-FIN	Screw Packet, Mtg.
		Consists of the following:
	81-0013-0670-FIN	Screw, 1/4-20 x 1 OPHMS (2)
	99-9999-7156-FIN	Washer, #14 Finish (2)

523F, 527F TRIM

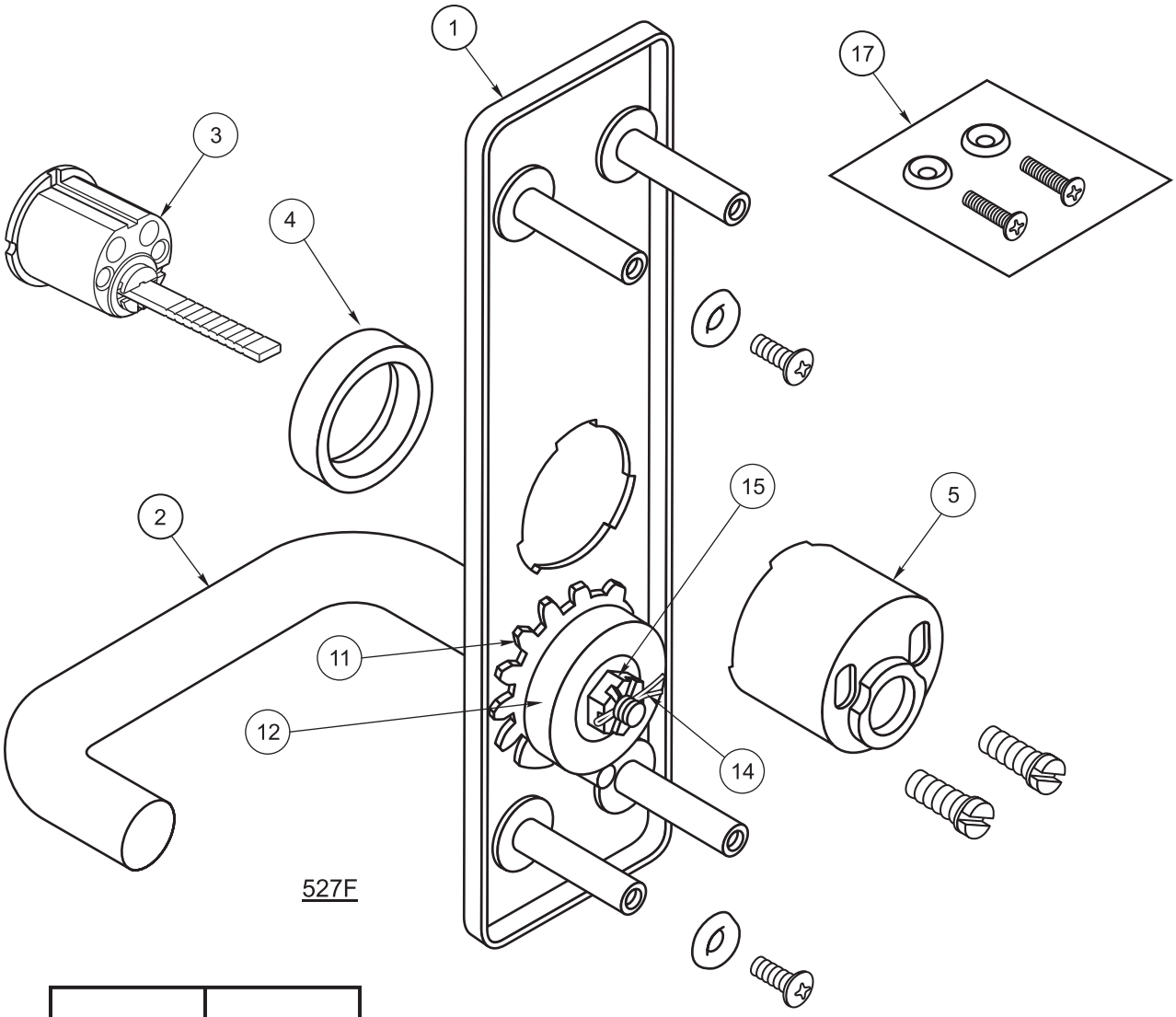

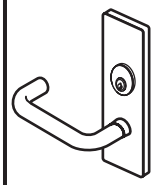	
(NL) Access by Key	**(NL) Access by Key**
F08	**F03**
527F	523F

552F, 554F, 556F, 558F TRIM

ITEM	PART NO.	DESCRIPTION
1		Escutcheon Assembly
	60-7030-0395-FIN	Cyl. x Lever or Knob
	60-7030-0394-FIN	Blank x Lever or Knob
2	*See Chart page 70*	Lever
2	*See Chart page 70*	Knob
3	*See Chart Page 71*	Cylinder, Mortise
4	*See Chart Page 71*	Collar, Cylinder
15	99-9999-3440-036	Nut, Spindle

ITEM	PART NO.	DESCRIPTION
16	60-7000-9001-999	Thimble Insert, Nylon *Not Shown*
17	81-9500-1476-FIN	Screw Packet, Mtg. *Consists of the following:*
	81-0013-0670-FIN	Screw, 1/4-20 x 1 OPHMS (2)
	99-9999-7156-FIN	Washer, #14 Finish (2)
23	60-7030-1065-059	Washer, Spindle
24	60-7030-1041-059	Bracket, Spindle

552F, 554F, 556F, 558F TRIM

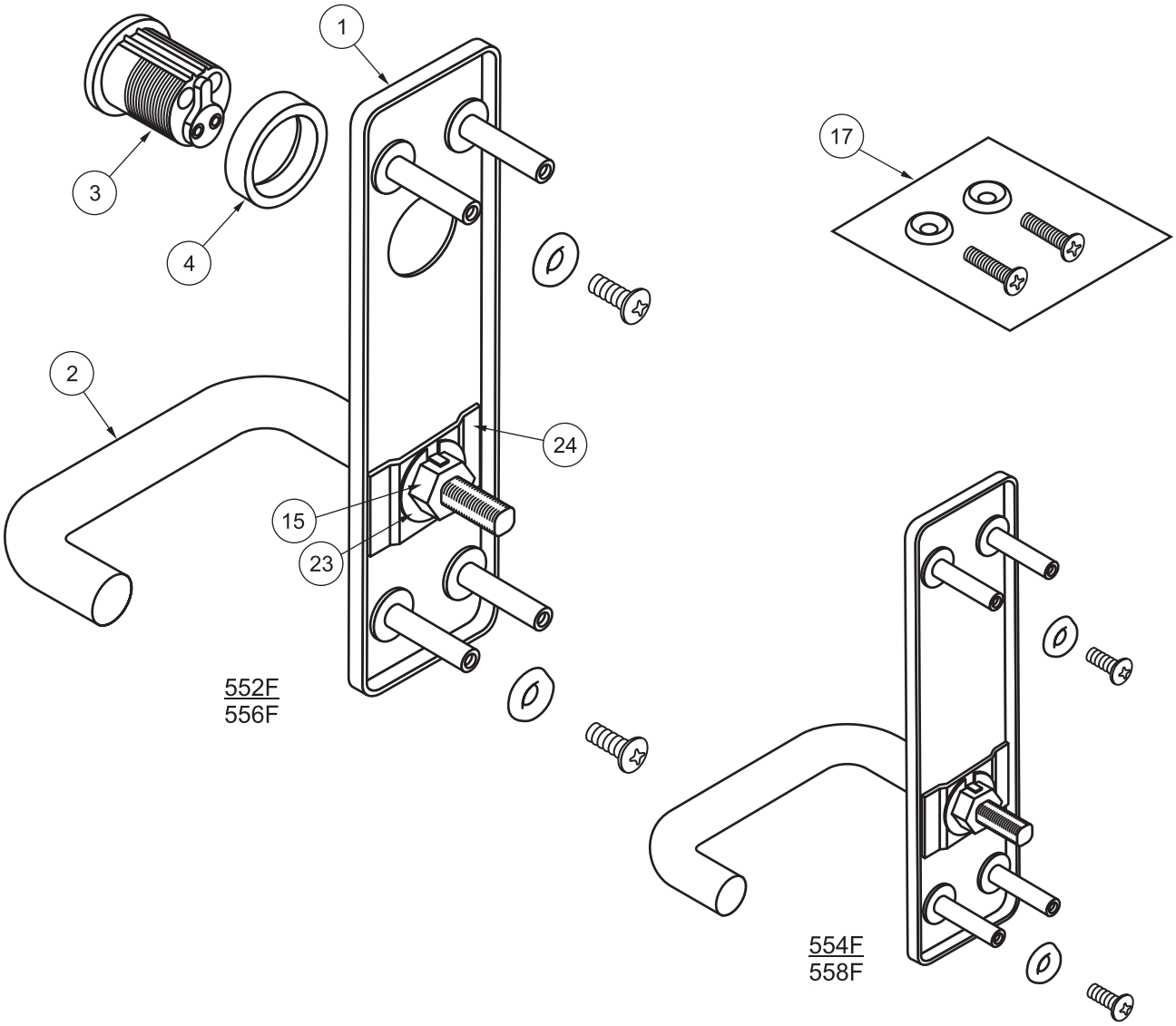

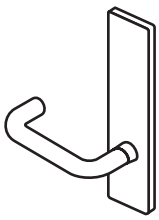		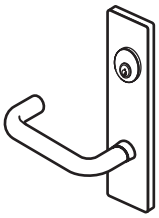					
(DT) Rigid Lever	**(Passage) Active Lever or (DT) Free Wheeling Lever***	**Cylinder Controls Lever**	**Access by Key and Lever**	**(DT) Rigid Knob**	**(Passage) Active Knob**	**Cylinder Controls Knob**	**Access by Key and Knob**
F02	**--**	**F08**	**F09**	**F02**	**--**	**F08**	**F09**
558F	558F	556F	556F	554F	554F	552F	552F

520F, 521F, 551F TRIM

ITEM	PART NO.	DESCRIPTION
1		Escutcheon Assembly
	60-7000-0142-FIN	520F
	60-7000-0148-FIN	521F
	60-7030-0400-FIN	551F
3	*See Chart Page 71*	Cylinder
4	*See Chart Page 71*	Collar, Mortise
4	*See Chart Page 71*	Collar, Rim Cylinder
5	60-2000-6206-082	Housing, Cylinder 521F

ITEM	PART NO.	DESCRIPTION
6	60-7000-1235-048	Screw, Cylinder 521F Mounting (2)
17	81-9500-1476-FIN	Screw Packet, Mtg. *Consists of the following:*
	81-0013-0670-FIN	Screw, 1/4-20 x 1 OPHMS (2)
	99-9999-7156-FIN	Washer, #14 Finish (2)

520F, 521F, 551F TRIM

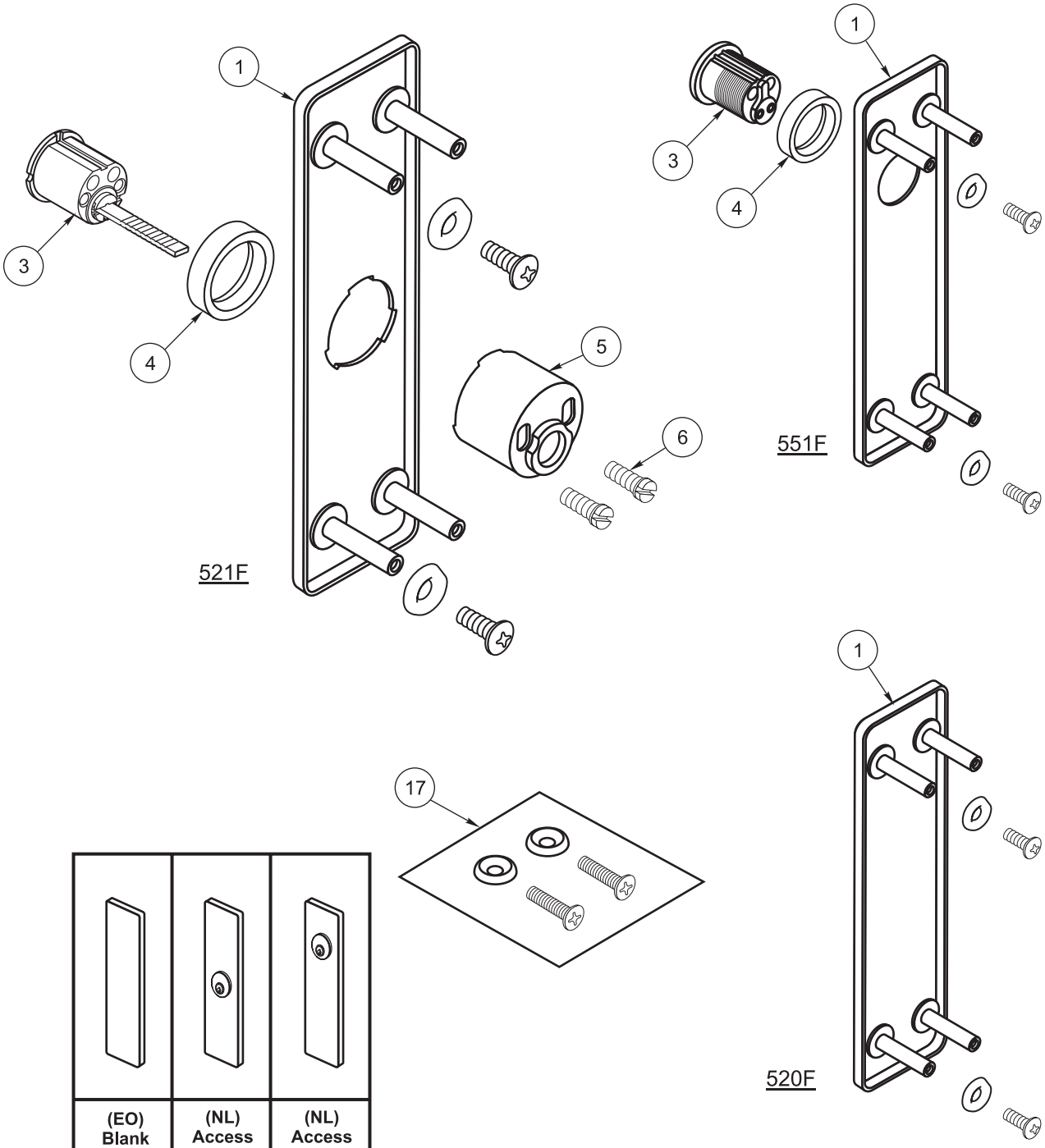

(EO) Blank Plate	(NL) Access by Key	(NL) Access by Key
F01	**F03**	**F03**
520F	521F	551F

533F, 535F TRIM

ITEM	PART NO.	DESCRIPTION
1		Escutcheon Assembly
	60-7000-0224-FIN	535F
	60-7000-0413-FIN	533F
2	60-7000-X192-FIN	Thumbpiece
3	*See Chart Page 71*	Cylinder, Rim
4	*See Chart Page 71*	Collar, Rim Cylinder
5	60-7000-0215-000	Housing & Cam Assembly
6	60-7000-1235-048	Screw, Cylinder Mounting (2)
7	81-0016-2200-999	Screw, NL Function
9	81-4414-0308-036	Screw, Tailpiece Plate, #6 x 3/8 PHT-T-PH (2)
10	60-7000-0212-059	Tailpiece Assembly
17	81-9500-1476-FIN	Screw Packet, Mtg. *Consists of the following:*
	81-0013-0670-FIN	Screw, 1/4-20 x 1 OPHMS (3)
	99-9999-7156-FIN	Washer, #14 Finish (3)

ITEM	PART NO.	DESCRIPTION
19	60-7000-1306-999	Spring (Not Shown) Under Tailpiece
20	60-7000-1305-059	Hex Nut/Bushing for Spring (Not Shown)
38	60-0010-2639-FIN	Pull, Straight
39	60-7000-1039-048	Screw Post
40	99-9999-7154-036	Lock Washer, Screw Post
41	99-9999-5697-999	Spring, Thumbpiece
42	60-7000-1190-059	Slider, Thumbpiece
43	60-7000-0214-000	Housing, Tailpiece Assy.
48	60-7000-1045-059	Pin, Thumbpiece

533F, 535F TRIM

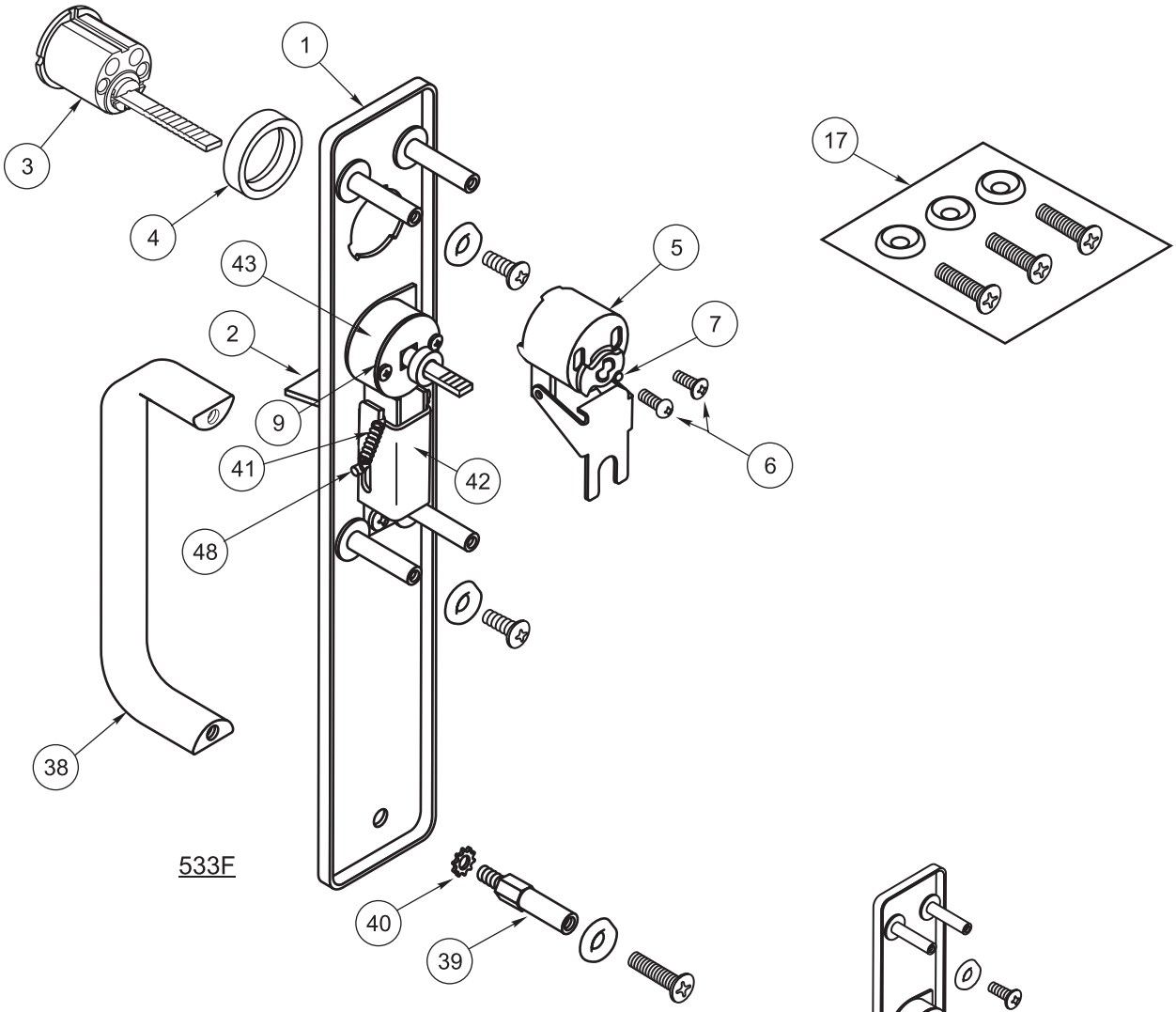

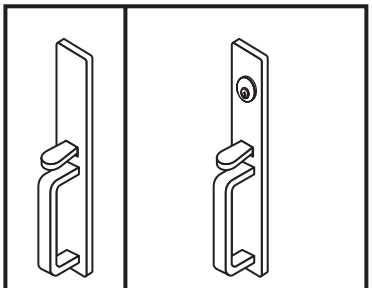

(Passage) Active T-Piece	Cylinder Controls T-Piece	Access by Key and T-Piece
--	F05	F06
535F	533F	533F

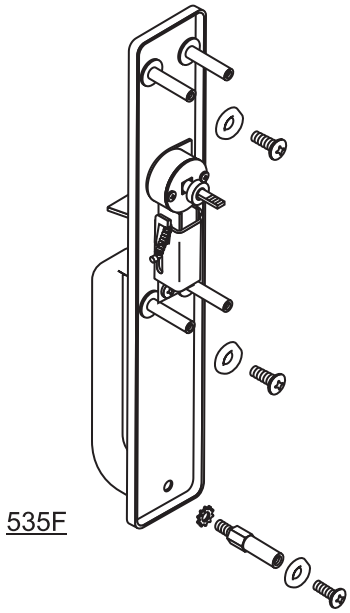

573F, 575F TRIM

ITEM	PART NO.	DESCRIPTION
1	60-7030-0396-FIN 60-7030-0397-FIN	Escutcheon Assembly 575F 573F
2	60-1530-X114-FIN	Thumbpiece
3	*See Chart Page 71*	Cylinder, Mortise
4	*See Chart Page 71*	Collar, Cylinder
17	81-9500-1405-FIN 81-9500-1453-FIN	Screw Packet, Mtg. 1-3/4” - 2” Doors 2-1/4” Doors
38	60-0010-2639-FIN	Pull, Straight
39	60-7000-1039-048	Screw Post

ITEM	PART NO.	DESCRIPTION
40	99-9999-7154-036	Lock Washer, Screw Post (2)
41	60-1530-1133-999	Spring, Thumbpiece
44	81-0010-0664-036	Screw, 1/4-20 x 5/8 RHM-PH
45	60-1500-1187-059	Tab, Thumbpiece (Not Shown)
46	60-1500-1806-059	Bracket, Thumbpiece
48	60-7000-1045-059	Pin, Thumbpiece

573F, 575F TRIM

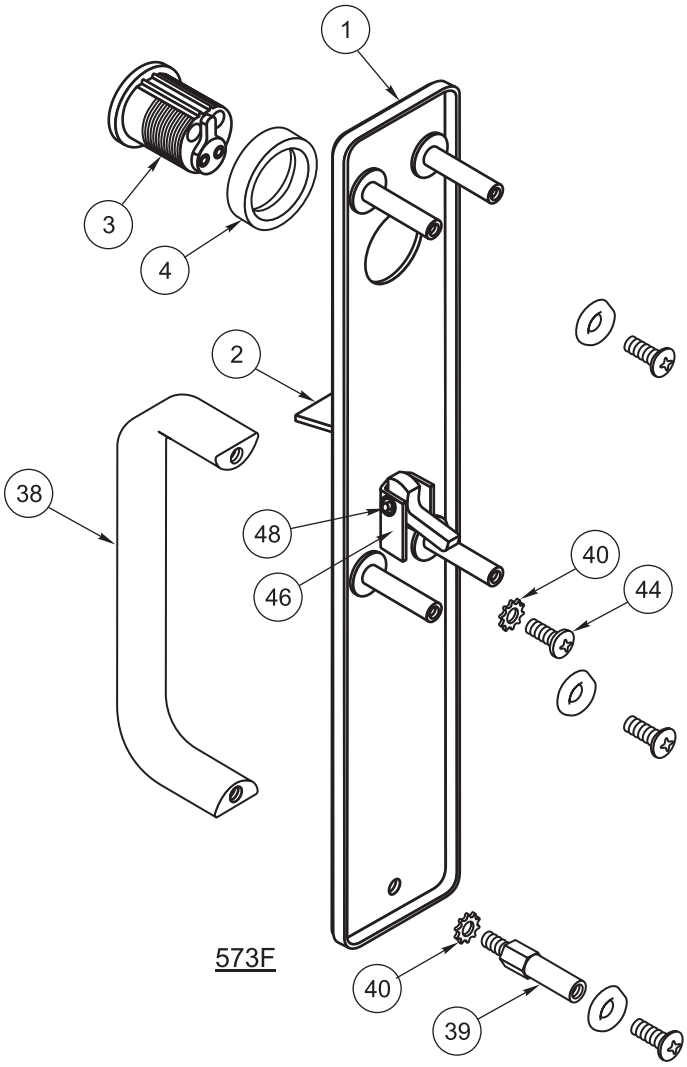

573F

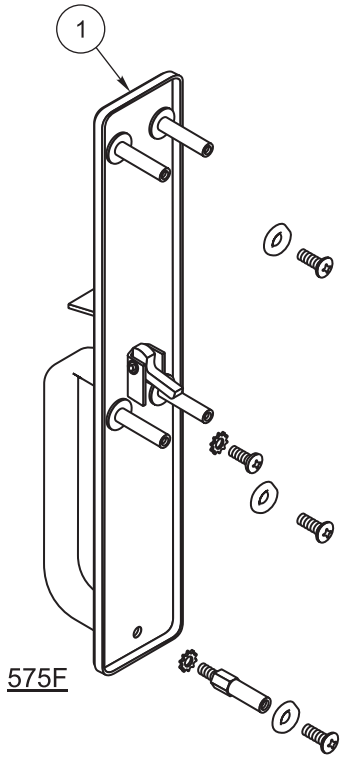

575F

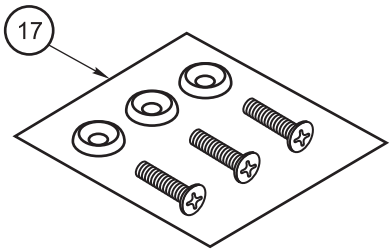

(Passage) Active T-Piece	Cylinder Controls Lever
--	F05
575F	573F

532F, 534F, 562F TRIM

ITEM	PART NO.	DESCRIPTION
1		Escutcheon Assembly
	60-7000-0049-FIN	532F
	60-7000-0052-FIN	534F
	60-7030-0398-FIN	562F
3	*See Chart Page 71*	Cylinder, Mortise or Rim
4	*See Chart Page 71*	Collar, Cylinder

ITEM	PART NO.	DESCRIPTION
5	60-2000-6206-082	Housing, Cylinder
6	60-7000-1235-048	Screw, Cylinder Mtg. (2)
17	81-9500-1466-FIN	Screw Packet, Mtg.
		Consists of the following:
	60-7000-1039-048	Threaded Post (1)
	81-0010-0664-FIN	1/4-20 x5/8” (1) RHPMS
	81-0013-0670-FIN	1/4-20 x1” (3) OHPMS
	99-9999-7154-FIN	Lockwasher (2)
	99-9999-7156-FIN	Washer #14 Finish (3)

532F, 534F, 562F TRIM

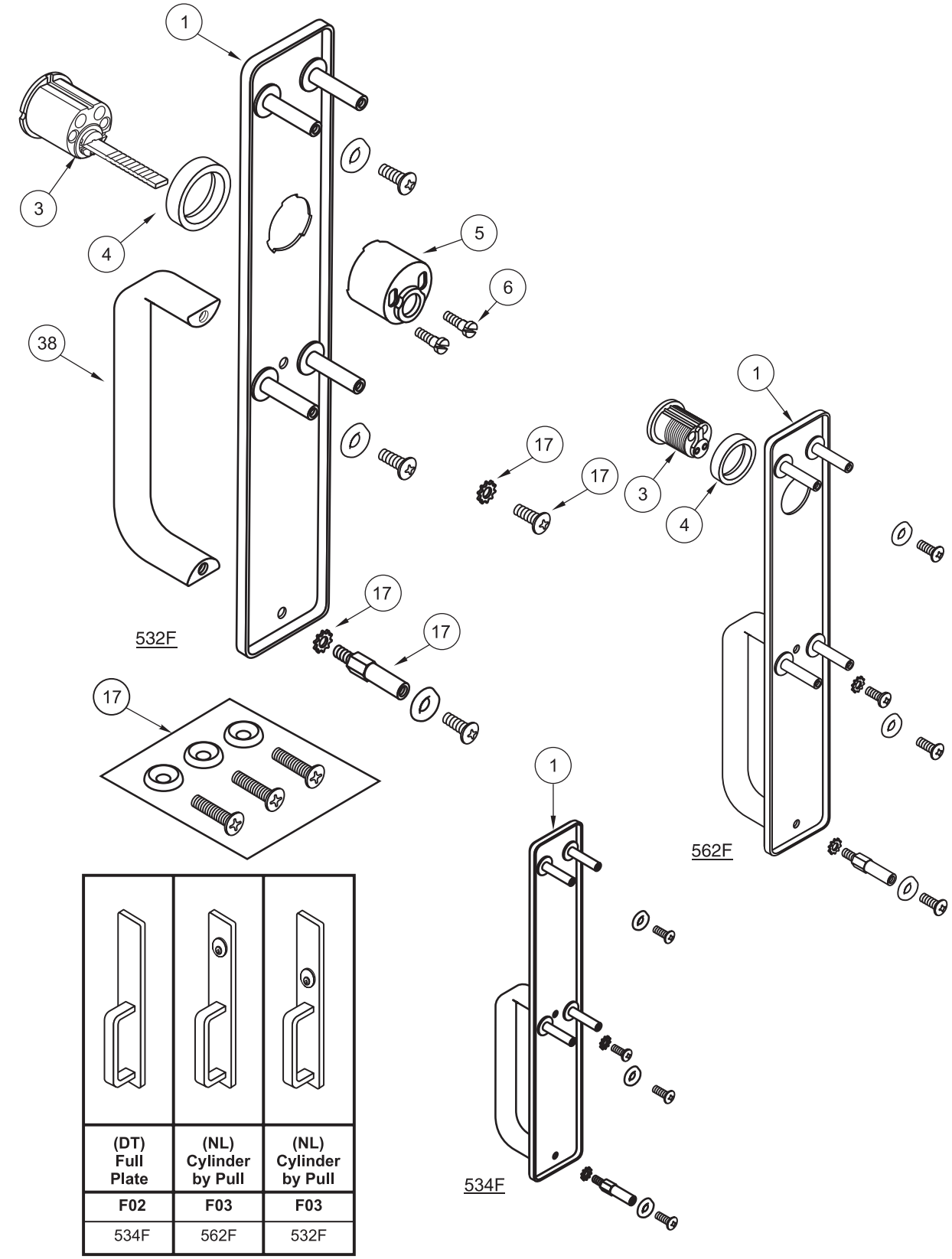

(DT) Full Plate	(NL) Cylinder by Pull	(NL) Cylinder by Pull
F02	**F03**	**F03**
534F	562F	532F

530F, 531F, 561F TRIM

ITEM	PART NO.	DESCRIPTION
1		Escutcheon Assembly
	60-7000-0163-FIN	531F
	60-7000-0143-FIN	530F
	60-7030-0399-FIN	561F
3	*See Chart Page 71*	Cylinder, Mortise or Rim
4	*See Chart Page 71*	Collar, Cylinder
5	60-2000-6206-082	Housing, Cylinder

ITEM	PART NO.	DESCRIPTION
6	60-7000-1235-048	Screw, Cylinder Mtg. (2)
17	81-9500-1405-FIN	Screw Packet, Mtg.
		Consists of the following:
	81-0013-0670-FIN	Screw, 1/4-20 x 1 OPHMS (3)
	99-9999-7156-FIN	Washer, #14 Finish (3)

530F, 531F, 561F TRIM

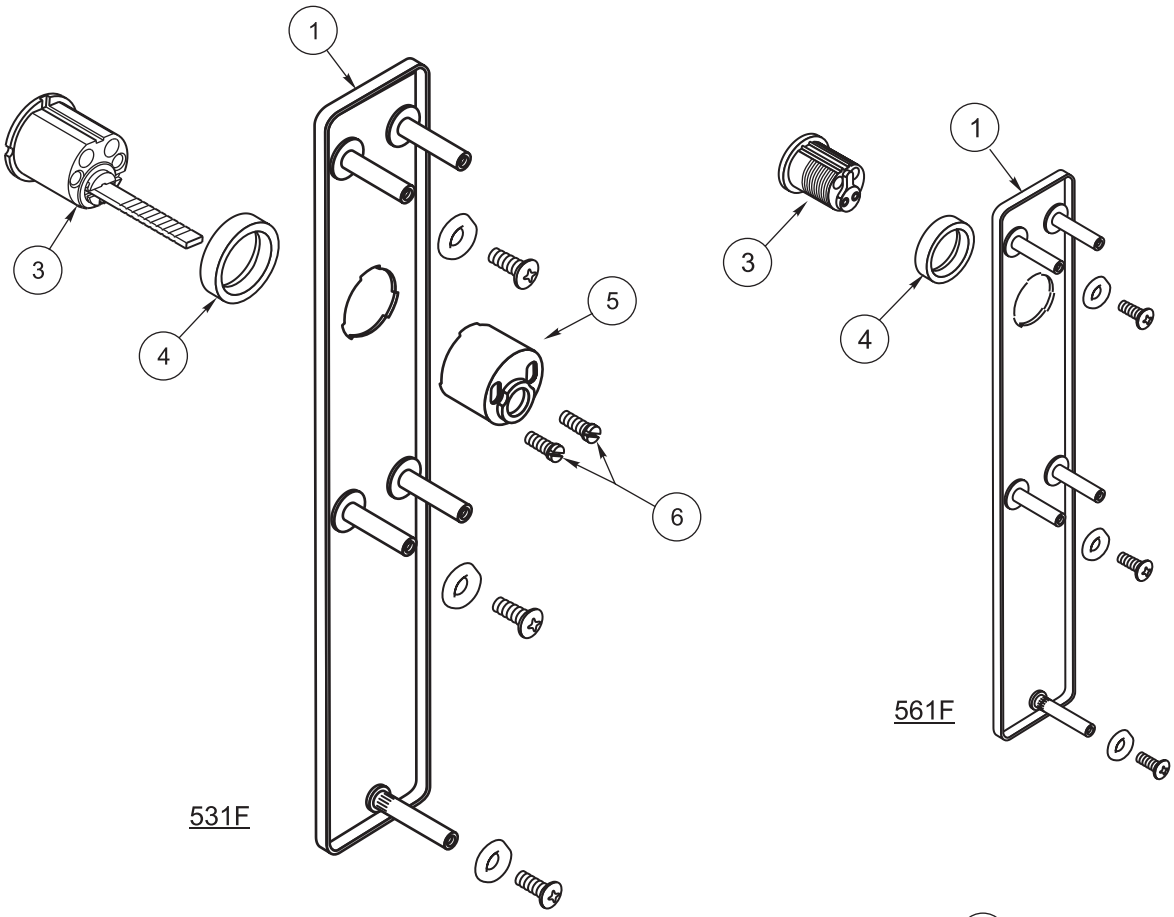

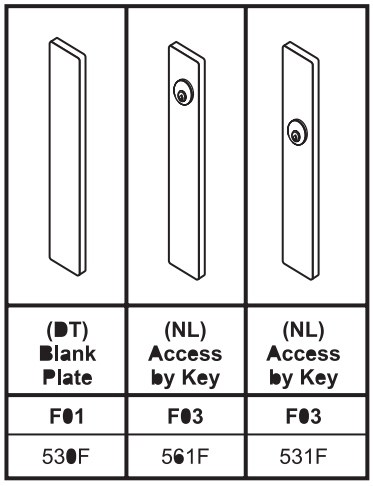

(DT) Blank Plate	(NL) Access by Key	(NL) Access by Key
F01	F03	F03
530F	561F	531F

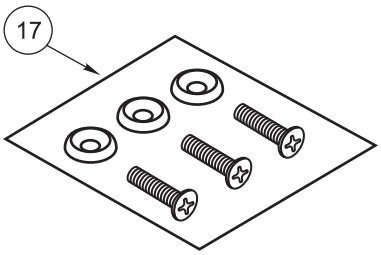

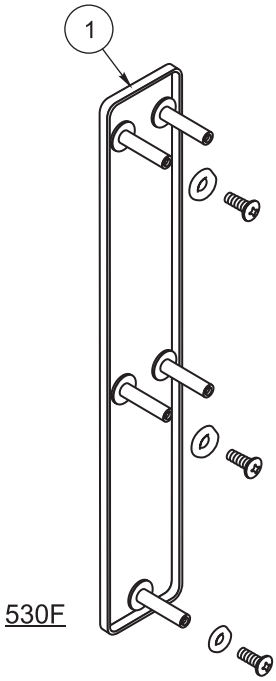

502F, 504F, 505F, 506F, 508F, 509F TRIM

ITEM	PART NO.	DESCRIPTION
1	60-7200-0128-FIN 60-7200-0129-FIN	Escutcheon Assembly 502F, 506F 504F, 505F, 508F, 509F
2	*See Chart page 70*	Lever
2	*See Chart page 70*	Knob
3	*See Chart Page 71*	Rim Cylinder
4	*See Chart Page 71*	Cylinder Collar
5	60-7200-0159-000 60-7200-6145-082	Housing & Cam Assembly 502F, 506F-Housing,Cyl. 504F, 505F, 508F, 509F
6	60-7000-1235-048	Screw, Cylinder Mounting (2)
7	81-0016-2200-999	Screw, NL Function
16	60-7000-9001-999	Thimble Insert, Nylon (Not Shown)
19	60-7000-1306-999	Spring (Not Shown) Under Tailpiece
25	60-7200-1120-059	Plate, Cover
26	99-9999-5702-999	Spring, Extension (Levers Only)

ITEM	PART NO.	DESCRIPTION
27	60-7200-1125-059	Nut, Spring Post (Levers Only)
28	60-7200-0360-000	Rack & Tailpiece Assy. Levers/Knobs
29	60-7200-1147-059	Lever, Clutch
30	60-7200-1083-059	Pin, Clutch Lever
31	99-9999-4617-999	Retainer, Clutch Lever Pin (2)
32	99-9999-3508-036	Nut, Cover Plate (2) (Not Shown)
33	60-7200-1142-000	Hub (Not Shown)
34	99-9999-0246-999	Bushing, Nylon (Not Shown)
35	60-7200-1104-059	Washer, Grip (Not Shown)
36	81-0611-0410-036	Screw, 8-32 x 7/16, Spindle
37	60-7200-1134-000 60-7200-1133-000	Spring, Rack (2) Lever Knob, Thumbturn

502F, 504F, 505F, 506F, 508F, 509F TRIM

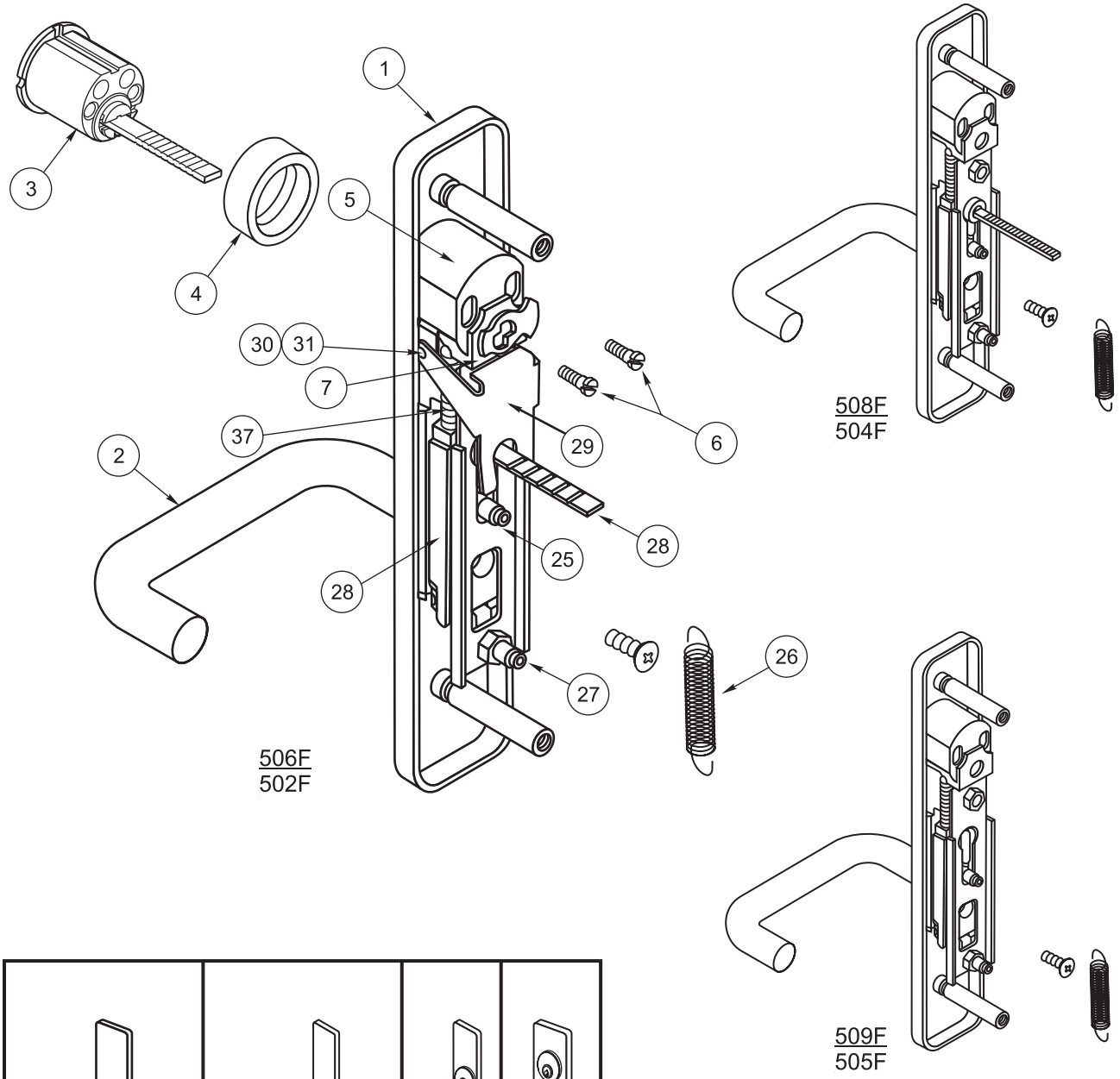

Rigid Dummy Knob	Passage Trim Knob	Rigid Dummy Lever	Passage Trim Lever	Cylinder Controls Lever	Cylinder Controls Knob
F02	--	F02	--	F08	F09
505F	504F	509F	508F	506F	502F

500F, 501F, 503F, 507F TRIM

ITEM	PART NO.	DESCRIPTION
1	60-7200-0151-FIN 60-7200-0123-FIN 60-7200-0127-FIN 60-7200-0126-FIN	Escutcheon Assembly 500F 501F 503F 507F
2	60-7200-0156-FIN	Thumbturn / Spindle Assembly
3	*See Chart Page 71*	Cylinder, Rim
4	*See Chart Page 71*	Collar, Cylinder
5	60-7200-0159-000 60-2000-6206-082	Housing & Cam Assembly 503F, 507F 501F, Housing, Cylinder
6	60-7000-1235-048	Screw, Cylinder Mounting (2)
7	81-0016-2200-999	Screw, NL Function
16	60-7000-9001-999	Thimble Insert, Nylon (Not Shown)
19	60-7000-1306-999	Spring (Not Shown) Under Tailpiece for 503F, 507F

ITEM	PART NO.	DESCRIPTION
25	60-7200-1120-059	Plate, Cover
28	60-7200-0360-000	Rack & Tailpiece Assembly
29	60-7200-1147-059	Lever, Clutch (503F)
30	60-7200-1083-059	Pin, Clutch Lever (503F)
31	99-9999-4617-999	Retainer, Clutch Lever Pin (2) (503F)
32	99-9999-3508-036	Nut, Cover Plate (2)
33	60-7200-1142-000	Hub (Not Shown)
34	99-9999-0246-999	Bushing, Nylon (Not Shown)
35	60-7200-1104-059	Washer, Grip (Not Shown)
36	81-0611-0410-036	Screw, 8-32 x 7/16 Spindle
37	60-7200-1133-000	Spring, Rack (2)

500F, 501F, 503F, 507F TRIM

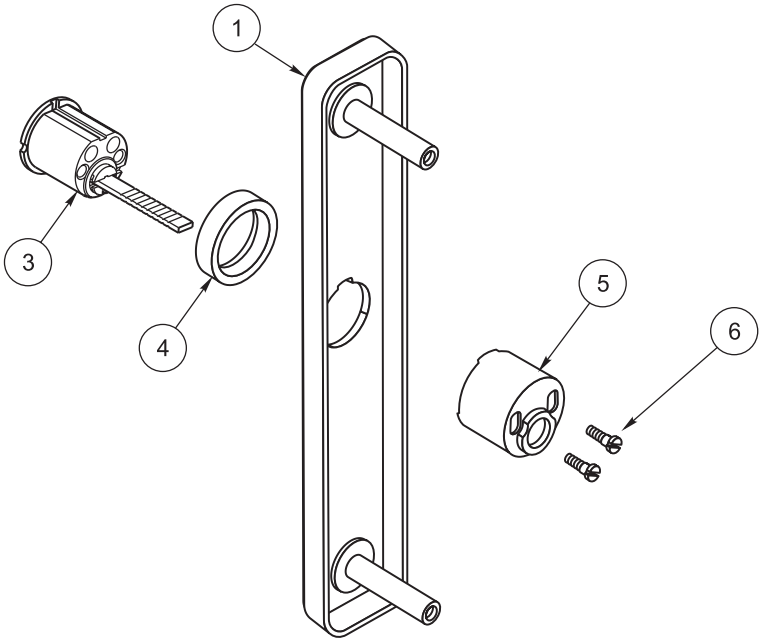

501F

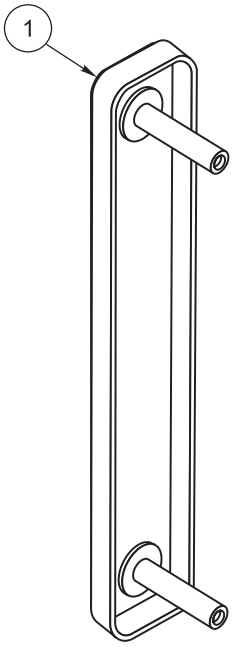

500F

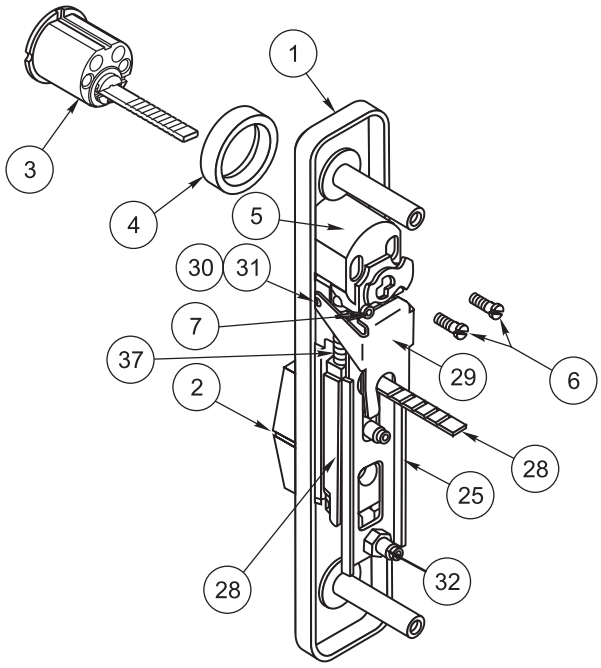

503F
507F

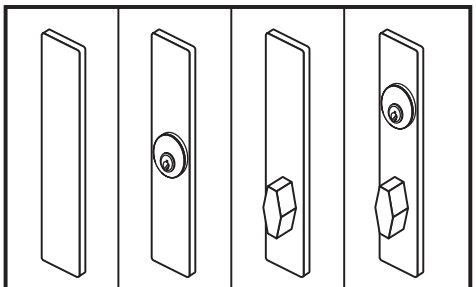

(EO) Blank Plate	(NL) Access by Key	Passage Active TTurn	Cylinder Controls Thumbturn	
--	F03	--	F11	F12
500F	501F	507F	503F	

518F, 519F TRIM

ITEM	PART NO.	DESCRIPTION
1		Escutcheon Assembly
	60-7200-0162-FIN	519F Top
	60-7200-0163-FIN	518F Top
	60-7200-0120-FIN	Bottom
2	60-7000-X192-FIN	Thumbpiece
3	*See Chart Page 71*	Cylinder, Rim
4	*See Chart Page 71*	Collar, Cylinder
5		Housing, Cylinder
	60-2000-6206-082	501F Housing, Cyl
	60-7200-0159-000	503F, 507F Housing, Cam
6	60-7000-1235-048	Screw, Cylinder Mounting (2)
7	81-0016-2200-999	Screw, NL Function
16	60-7000-9001-999	Thimble Insert, Nylon (Not Shown)
17	81-9500-1476-FIN	Screw Packet, Mtg.
		Consists of the following:
	81-0013-0670-FIN	Screw, 1/4-20 x 1 OPHMS (1)
	99-9999-7156-FIN	Washer, #14 Finish (1)
19	60-7000-1306-999	Spring (Not Shown) Under Tailpiece 518F
25	60-7200-1120-059	Plate, Cover
28	60-7200-0360-000	Rack & Tailpiece Assy

ITEM	PART NO.	DESCRIPTION
29	60-7200-1147-059	Lever, Clutch (503F)
30	60-7200-1083-059	Pin, Clutch Lever (503F)
31	99-9999-4617-999	Retainer, Clutch Lever Pin (2) (503F)
32	99-9999-3508-036	Nut, Cover Plate (2)
33	60-7200-1142-000	Hub (Not Shown)
34	99-9999-0246-999	Bushing, Nylon (Not Shown)
35	60-7200-1104-059	Washer, Grip (Not Shown)
37	60-7200-1133-000	Spring, Rack (2)
38	60-7200-X136-FIN	Pull, Offset
39	60-7000-1039-048	Screw Post (2)
40	99-9999-7154-036	Lockwasher, Screw Post (2)
50	99-9958-0044-999	Pin, 5/32 x 1-1/8, Groove (Not Shown)

518F, 519F TRIM

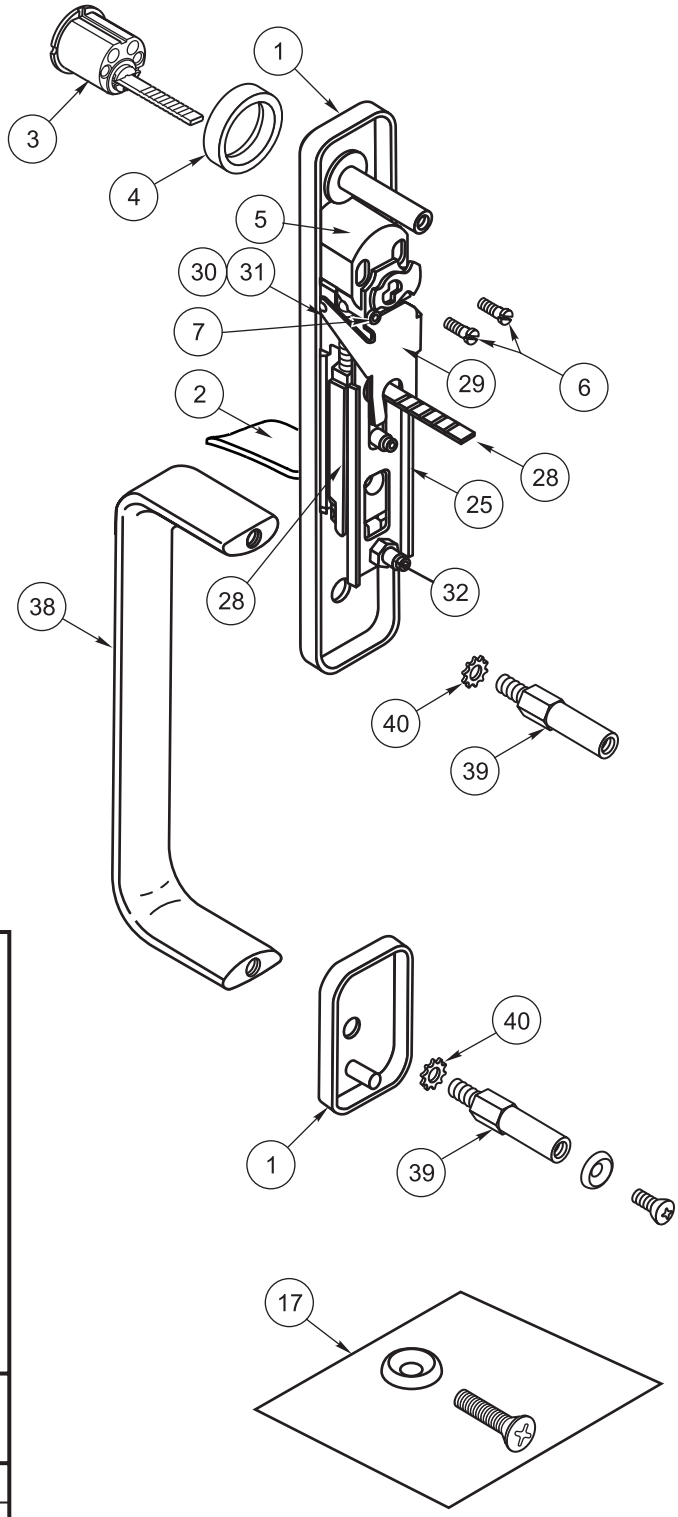

Passage Active T-Piece	Cylinder Controls T-Piece
--	F05 / 506
519F	518F

513F, 517 TRIM

ITEM	PART NO.	DESCRIPTION
1		Escutcheon Assembly
	60-7200-0154-FIN	513F Top
	60-7200-0155-FIN	517F Top
	60-7200-0120-FIN	Bottom
2	60-7200-0156-FIN	Thumbturn/Spindle Assy.
3	*See Chart Page 71*	Cylinder, Rim
4	*See Chart Page 71*	Collar, Cylinder
5		Housing , Cylinder
	60-7200-0159-000	513F
	60-2000-6206-082	517F
6	60-7000-1235-048	Screw, Cylinder Mounting (2)
7	81-0016-2200-999	Screw, NL Function
16	60-7000-9001-999	Thimble Insert, Nylon (Not Shown)
17	81-9500-1476-FIN	Screw Packet, Mtg.
		Consists of the following:
	81-0013-0670-FIN	Screw, 1/4-20 x 1 OPHMS (1)
	99-9999-7156-FIN	Washer, #14 Finish (1)
19	60-7000-1306-999	Spring (Not Shown) Under Tailpiece 513F
25	60-7200-1120-059	Plate, Cover

ITEM	PART NO.	DESCRIPTION
28	60-7200-0360-000	Rack & Tailpiece Assy
29	60-7200-1147-059	Lever, Clutch (513F)
30	60-7200-1083-059	Pin, Clutch Lever (513F)
31	99-9999-4617-999	Retainer, Clutch Lever Pin (2) (513F)
32	99-9999-3508-036	Nut, Cover Plate (2)
33	60-7200-1142-000	Hub (Not Shown)
34	99-9999-0246-999	Bushing, Nylon (Not Shown)
35	60-7200-1104-059	Washer, Grip (Not Shown)
37	60-7200-1133-000	Spring, Rack (2)
38	60-7200-X136-FIN	Pull, Offset
39	60-7000-1039-048	Screw Post (2)
40	99-9999-7154-036	Lockwasher, Screw Post (2)
50	99-9958-0044-999	Pin, 5/32 x 1-1/8, Groove (Not Shown)

513F, 517 TRIM

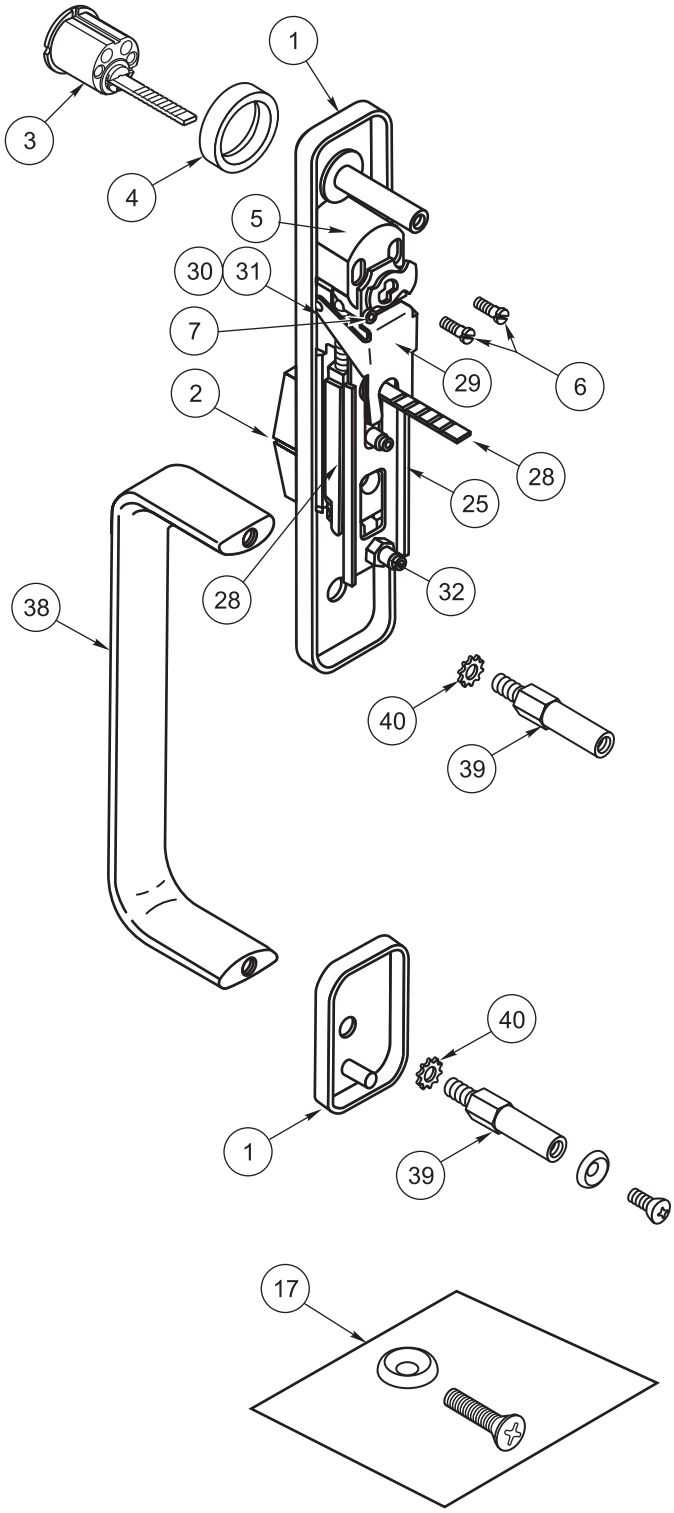

(Passage) Active T-Turn	Cylinder Controls T-Turn
--	F11 / F12
517F	513F

512F, 514F TRIM

ITEM	PART NO.	DESCRIPTION
1		Escutcheon Assembly
	60-7200-0172-FIN	514F Top
	60-7200-0165-FIN	512F Top
	60-7200-0120-FIN	Bottom
3	*See Chart Page 71*	Cylinder, Rim
4	*See Chart Page 71*	Collar, Cylinder
5	60-7200-0159-000	Housing, Cylinder
6	60-7000-1235-048	Screw, Cylinder Mounting (2)

ITEM	PART NO.	DESCRIPTION
17	81-9500-1476-FIN	Screw Packet, Mtg.
		Consists of the following:
	81-0013-0670-FIN	Screw, 1/4-20 x 1 OPHMS (1)
	99-9999-7156-FIN	Washer, #14 Finish (1)
38	60-7200-X136-FIN	Pull, Offset
39	60-7000-1039-048	Screw Post (2)
40	99-9999-7154-036	Lockwasher, Screw Post (2)

512F, 514F TRIM

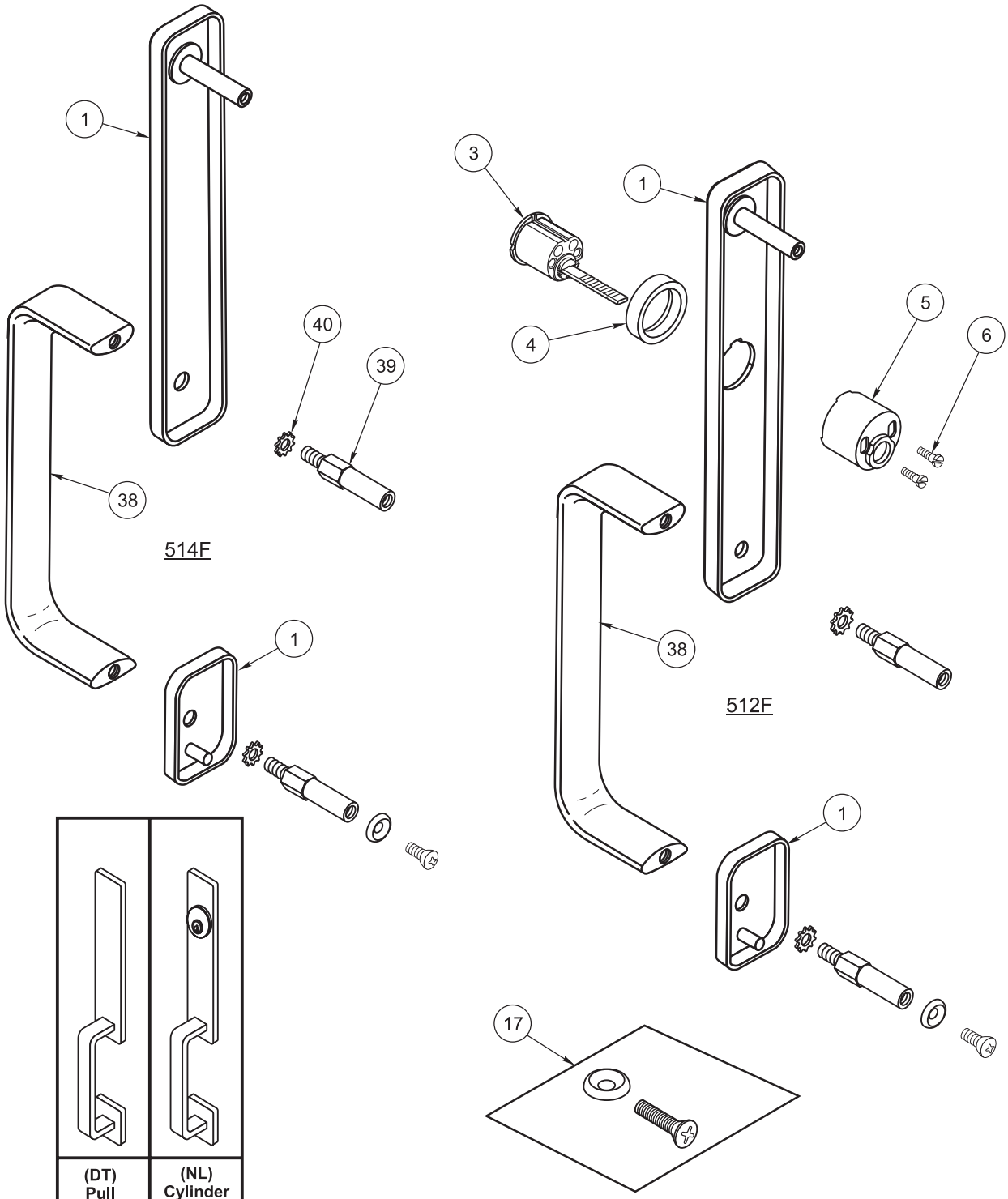

(DT) Pull Plate	(NL) Cylinder by Pull
F02	F03
514F	512F

541F, 546F, 548F, 549F TRIM

ITEM	PART NO.	DESCRIPTION
1	14-5401-2711-FIN	Rose Scalp
2		Lever
		Plain
	14-5401-6640-FIN	AU - Augusta
	14-5403-6650-FIN	MO - Monroe
	14-5403-6651-FIN	PB - Pacific Beach
		Cylinder
	14-5407-6038-FIN	AU - Augusta
	14-5407-6042-FIN	MO - Monroe
	14-5407-6062-FIN	PB - Pacific Beach
		Yale I/C (6 Pin)
	14-5407-6021-FIN	AU - Augusta
	14-5407-6045-FIN	MO - Monroe
	14-5407-6065-FIN	PB - Pacific Beach
		Yale I/C (7 Pin)
	14-5407-6022-FIN	AU - Augusta
	14-5407-6042-FIN	MO - Monroe
	14-5407-6066-FIN	PB - Pacific Beach
		Best, Arrow, Falcon I/C (6 & 7 Pin)
	14-5407-6056-FIN	AU - Augusta
	14-5407-6048-FIN	MO - Monroe
	14-5407-6068-FIN	PB - Pacific Beach
		Corbin/Russwin I/C (6)
	14-5407-6080-FIN	AU - Augusta
3	14-5407-0108-FIN	Rose Support Assembly

ITEM	PART NO.	DESCRIPTION
6	81-0015-0580-036	Screw, 10-32 x 2 PTHMS (2)
7	14-5407-1102-000	Tool, Lever Removal
8		Driver & Rod Assembly
	14-5407-0060-000	Yale
	14-5407-0161-048	Best, Arrow, Falcon I/C
9	14-5407-2053-000	Spacer
10	14-5407-9034-999	Pad, Retainer
11	14-5407-1101-048	Sleeve
12	14-5407-0460-048	Bar, Connecting (Schlage)
13	14-5407-1036-048	Cam, Cylinder
14	99-9999-3942-999	Pin, Roll
15	*See Chart Page 71*	Cylinder
16	14-5407-9201-048	Spacer, Cylinder
17	14-5407-0161-048	Spindle Assembly
18	14-5408-0902-048	Flange Assembly
19	14-5402-1626-048	Seat, Spring
20	14-5403-7581-999	Spring, Pawl
21	14-5401-1906-048	Pawl

541F, 546F, 548F, 549F TRIM

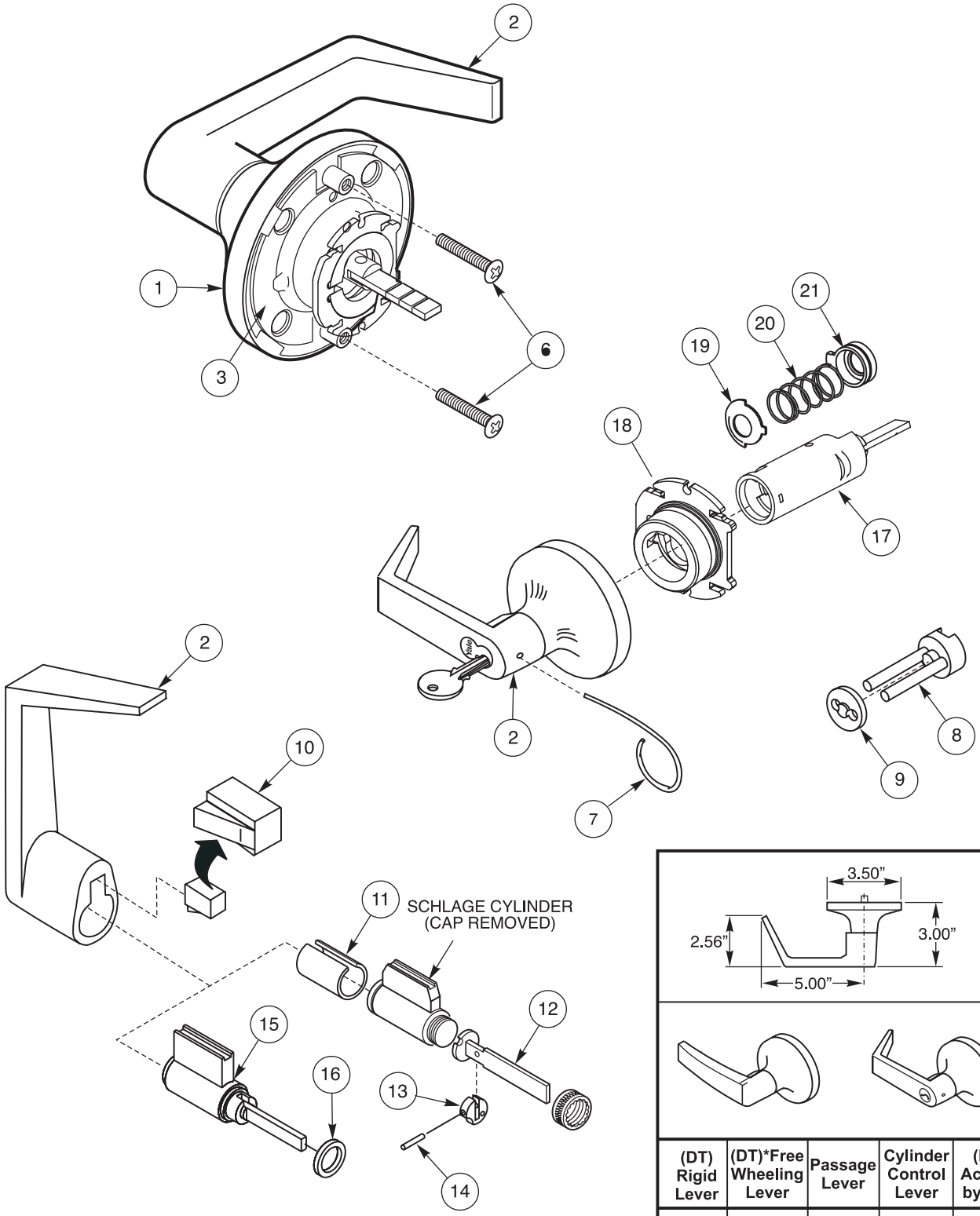

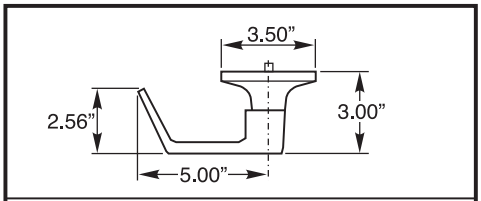

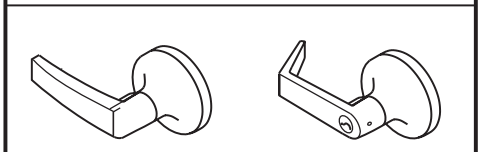

(DT) Rigid Lever	(DT)*Free Wheeling Lever	Passage Lever	Cylinder Control Lever	(NL) Access by Key
F02	**F02**	**--**	**F08**	**F03**
549F	548F	548F	546F	541F

542F, 544F TRIM

ITEM	PART NO.	DESCRIPTION
1	60-2000-X079-FIN 14-5301-X638-FIN	Knob, CA 542F 544F
2	14-5401-X077-FIN	Rose
3	14-5755-X004-FIN	Nut, Rose
4	60-2100-0022-080	Plate, Mounting
5	14-5400-0036-048	Tool, Knob Removal
6	34-1147-1003-048	Tailpiece
7	60-2000-1207-059	Retainer
8	81-0610-0154-036	Screw, Locking (2)
9	99-9999-7331-999	Washer, Lock (2)

ITEM	PART NO.	DESCRIPTION
10	81-0015-0576-036	Screw, Mounting (2)
11	1801/1802	Cylinder
12	60-2000-1194-059	Shield
13	60-2000-6192-082	Insert
14	14-5301-X664-FIN	Cap, Trim
15	81-0014-0504-036	Screw, 10-24 x 1/4 PPHMS (2)
16	60-2000-0018-048	Spindle Assembly
17	60-2000-1092-999	Spring

542F, 544F TRIM

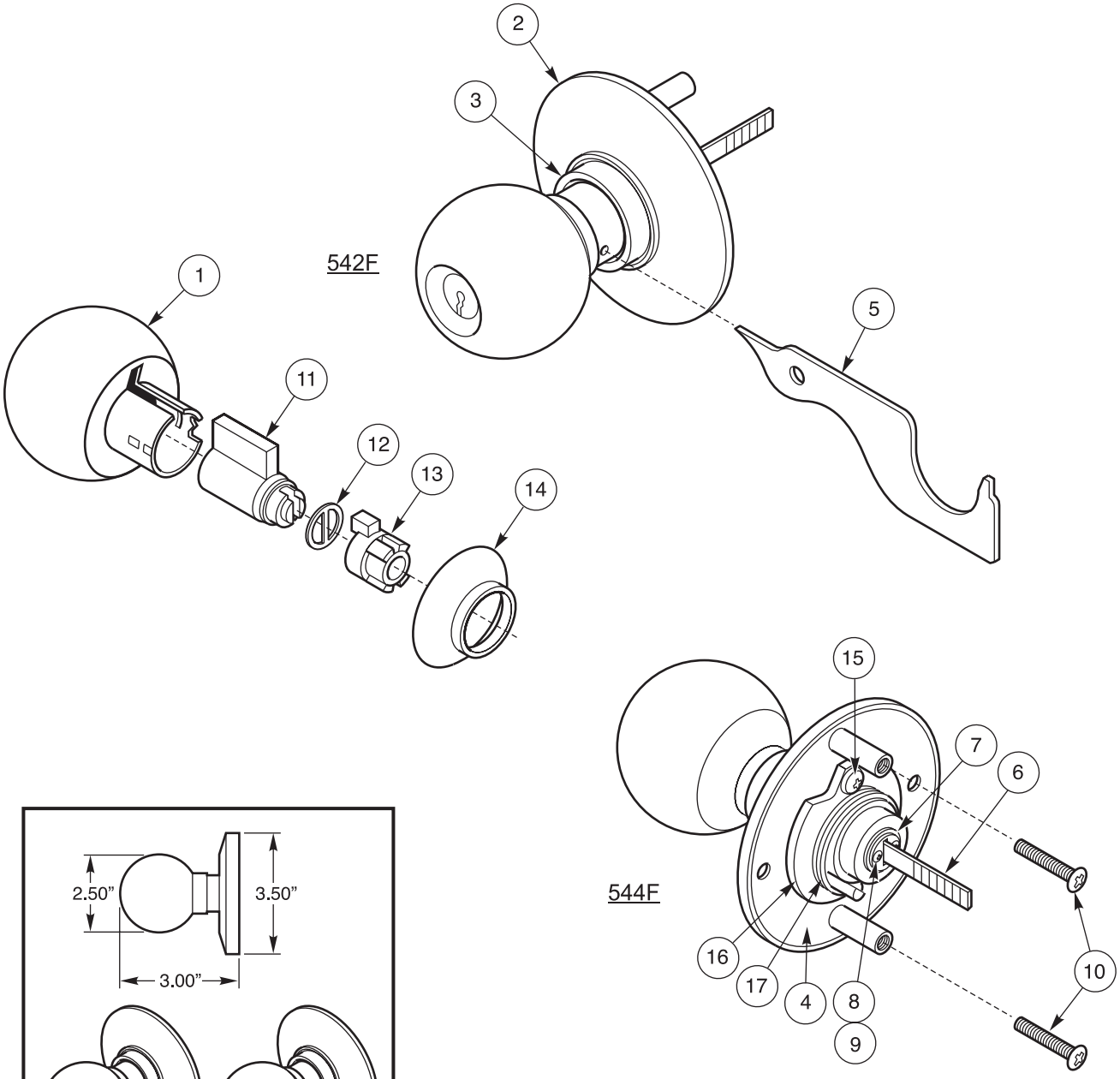

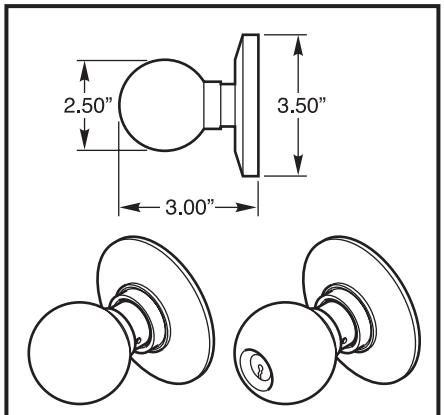

(DT) Free Wheeling Lever	Passage Knob	Cylinder Control Knob
F02	**--**	**F08**
CA544F	CA544F	CA542F

LEVERS & KNOBS

AR Arcadia Projection: 3-1/16" (78mm) Lever assembly: RHR 60-7000-0097-FIN LHR 60-7000-0098-FIN	**AU** Augusta Projection: 2-5/16" (59mm) Lever assembly: 60-7000-0095-FIN	**CR** Carmel Projection: 2-7/8" (73mm) Lever assembly: 60-7000-0140-FIN	**JN** Jefferson Projection: 2-3/8" (60mm) Lever assembly: 60-7000-0093-FIN
MO Monroe Projection: 2-3/16" (71mm) Lever assembly: 60-7000-0239-FIN	**PB** Pacific Beach Projection: 2-3/4" (70mm) Lever assembly: 60-7000-0240-FIN	**PN** Pinehurst Projection: 2-7/8" (73mm) Lever assembly: 60-7000-0198-FIN	**VI** Virginia Projection: 2-3/4" (70mm) Lever assembly: 60-7000-0236-FIN
BR Brandywine Projection: 2-11/16" (68mm) Knob assembly: 60-7000-0064-FIN	**CO** Copenhagen Projection: 3-1/8" (79mm) Knob assembly: 60-7000-0062-FIN	**LF** Litchfield Projection: 2-1/2" (64mm) Knob assembly: 60-7000-0060-FIN	

ACCESSORIES

			Application:	Cylinder(s)	Description	Cylinder Ring	Mounting Screws
Rim Cylinder	**Narrow Escutcheon Trim 500F/510F Series** Rim cylinders with special #599 cylinder rings. NOT AVAILABLE with U5109 cylinder.	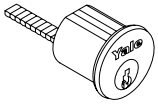	7200, 7200M, 7200MF Rim 7250, 7250M, 7250MF SquareBolt® 7210, 7210M, 7210MF SVR 7220, 7220M, 7220MF CVR	1109 / 5109 6-pin	Standard / Security	599-.419	60-7000-1235-048
				1109 / 5109 7-pin	Standard / Security	599-.419	60-7000-1235-048
				1193 / 5193 6-pin	I.C. / Sec. I.C.	599-.544	10-1193-1018-048
				1193 / 5193 7-pin	I.C. / Sec. I.C.	599-.544	10-1193-1018-048
				1709 6-pin	CMK Cylinder	599-.544	34-2311-8738-048
				1709 7-pin	CMK Cylinder	599-.700	34-2311-8738-048
	Standard Escutcheon Trim 520F/530F Series Rim Cylinders	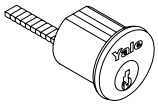	7100(F) Rim 7150(F) SquareBolt® 7110(F), 7170(F) SVR 7120(F) CVR	1109 / 5109 6-pin	Standard / Security	1765-.250	60-7000-1235-048
				U5109 6-pin	High Security	-----	60-7000-1235-048
				1109 / 5109 7-pin	Standard / Security	1765-.250	60-7000-1235-048
				U5109 7-pin	High Security	1766	60-7000-1235-048
				1709 6-pin	CMK Cylinder	1765-.656	34-2311-8738-048
				1709 7-pin	CMK Cylinder	1765-.656	34-2311-8738-048
				1193 / 5193 6-pin	Std. / Sec. I.C.	1765-.469	10-1193-1018-048
				1193 / 5193 7-pin	Std. / Sec. I.C.	1765-.656	10-1191-1018-048
	Heavy-Duty Escutcheon Trim 620F and 600 Series Electric Trim Rim Cylinders	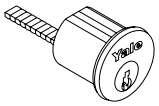	7100(F), Rim 7150(F) SquareBolt® 7110(F), 7170(F) SVR 7120(F), 7160(F) CVR	1109 / 5109 6-pin	Standard / Security	-----	60-7000-1235-048
				U5109 6-pin	High Security	-----	60-7000-1235-048
				1109 / 5109 7-pin	Standard / Security	-----	60-7000-1235-048
				U5109 7-pin	High Security	-----	60-7000-1235-048
				1709 6-pin	CMK Cylinder	1765-.250	34-2311-8738-048
				1709 7-pin	CMK Cylinder	1765-.250	34-2311-8738-048
				1193 / 5193 6-pin	Std. / Sec. I.C.	1765-.250	10-1193-1018-048
				1193 / 5193 7-pin	Std. / Sec. I.C.	1765-.344	10-1193-1018-048

Note: Mounting screw part numbers shown are the screws to mount the cylinder.

			Application:	Cylinder(s)	Description	Cylinder Ring
Mortise Cylinder	**Mortise Exit Devices Standard Escutcheon trim 550F/560F Series**		7130(F) Mortise	2153/5153, 6 or 7-pin, 1-1/4" (32mm)	Standard / Security	1765 - .062
				2196 / 5196 6-pin	Std. I.C. / Sec. I.C.	1765 - .344
				2197 / 5197 7-pin	Std. I.C. / Sec. I.C.	1765 - .531
				U5153, 6 or 7-pin, 1-1/4" (32mm)	High Security	----
	Mortise Exit Devices Heavy-Duty Escutcheon Trim 650F Series		7130(F) Mortise	2153 / 5153, 6 or 7-pin, 1-1/2" (38mm)	Standard / Security	----
				2196 / 5196 6-pin	Std. I.C. / Sec. I.C.	----
				2197 / 5197 7-pin	Std. I.C. / Sec. I.C.	1765 - .062
	Keyed Removable Mullions KRM100/100F		7100(F), 7150(F), 7200, 7250, 7200M(F), 7250(F)	2153/5153*, 6 or 7-pin, 1-1/8" (29mm)	Standard / Security	-----
				2196 / 5196 6-pin	Std. I.C. / Sec. I.C.	1765-.250
				2197 / 5197 7-pin	Std. I.C. / Sec. I.C.	1765-.250
	Cylinder Dogging		Panic-rated devices	2153 , 6-pin, 1-1/8" (29mm)	Standard	----
				2153, 7-pin 1-1/4" (32mm)	Optional 7-pin	1765 - .156
				2196, 6-pin 1-1/2" (38mm)	Std. I.C. 6-pin	1765 - .406
	SecureX™ & Alarm Kit		All Exit Devices	2197, 7-pin 1-11/16" (42mm)	Std. I.C. 7-pin	1765 - .594

As with exit device trim you must order a cylinder to go with a keyed removable mullion. The *Yale* keyed removable mullion accepts a standard 6-pin 2153 mortise cylinder with cam #2160. Other cylinders are optional.

*U5153 6 and 7-pin cylinders cannot be used with a keyed removable mullion.

		Application:	Cylinder(s)	Description
Knob or Leverset Trim 540F Series Trim Keyed trim uses Yale® cylindrical lock cylinders.	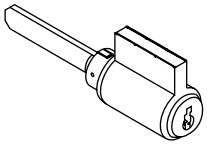	7100(F) Rim 7150(F) *SquareBolt* 7110(F), 7170(F) SVR 7120(F) CVR	1801	6-pin Knob Cyl. (Std.)
			1802	6-pin Lever Cyl. (Std.)
			1802A	7-pin Lever Cylinder
			1210	6-pin I.C. Lever Cylinder
			1220	7-pin I.C. Lever Cylinder
			5802	6-pin Security Lever Cyl.
			5802A	7-pin Security Lever Cyl.
			5210	6-pin I.C. Security Cyl.
			5220	7-pin I.C. Security Cyl.
			107S	Adaptor kit for Schlage® Cyl.
			"B" Trim Prefix	Trim with lever for Best®, Arrow® or Falcon® IC cylinder (specify 6 or 7-pin)
			"R" Trim Prefix*	Trim with lever for Corbin Russwin IC cylinder

*AU & PB levers only.

Yale KeyMark® Refer to separate catalog section for availability.

ACCESSORIES

Rim Devices

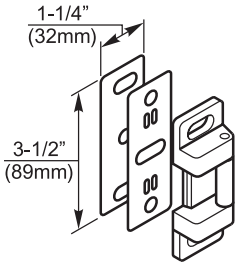

757
Standard
7100, 7200M

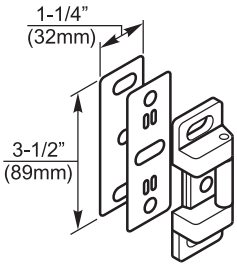

757F
Standard
7100F, 7150(F)
7200MF, 7250M(F)

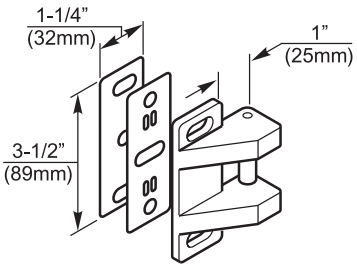

793
Optional
7100, 7150, 7200M, 7250M

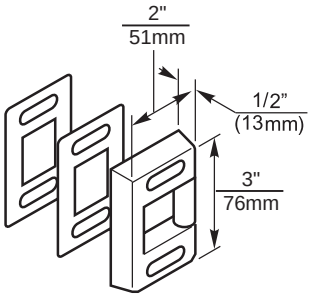

759
Standard
7200 Rim

Vertical Rod Devices

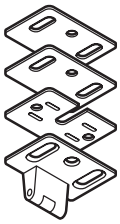

791
Standard
7110, 7120 Top

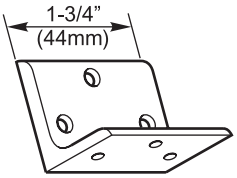

797
Bracket for SVR Top Strike
in Flush Transom Opening

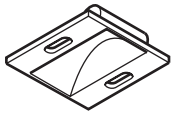

761
Standard
7160 Top

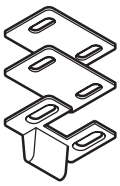

726
Standard
7170 Top

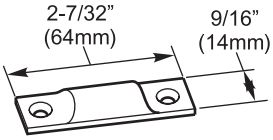

702
Floor Strike for Bottom
Pullman Latch Option

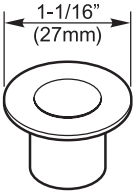

790
Standard
All Vertical Rod Devices

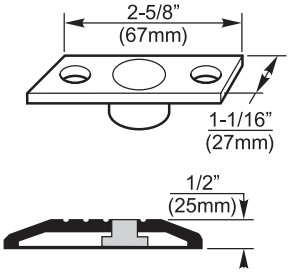

794
Floor Strike for fire openings using
saddle threshold, or flush floor mount

Mortise Devices

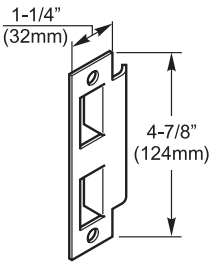

798
Standard
All Mortise (Non-Handed)

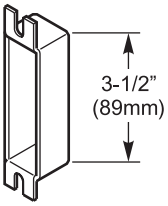

202
Standard Box
for ANSI Prep

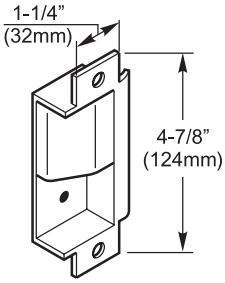

718
Open Back Strike
for Door Pair
When Code Allows Use

ACCESSORIES

Shim Kits

724, 724NS
For Surface Vertical Rod Exit Device

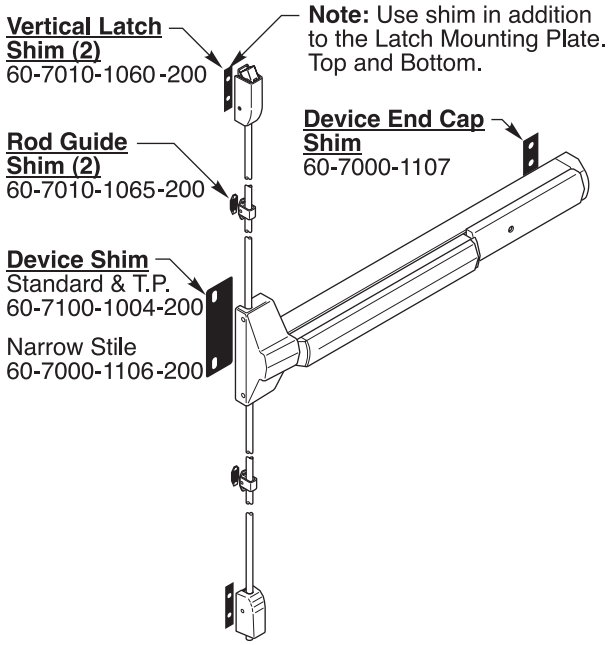

723, 723NS
For Rim, Mortise, and CVR Exit Device

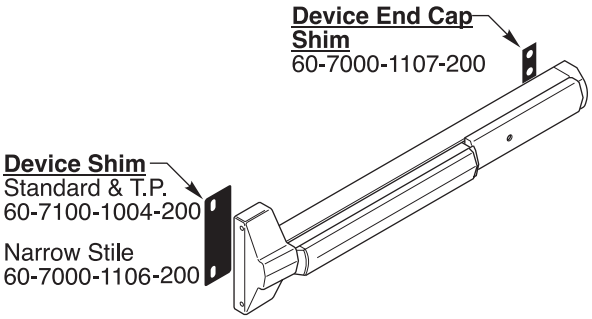

Cylinder Dogging Kits

Designed to convert a panic device from hex key dogging to cylinder dogging.

Not permitted on fire-rated devices.

Bar Length	Part Number
36”	60-7000-0426-FIN
36” NS	60-7200-0358-FIN
48”	60-7000-0427-FIN

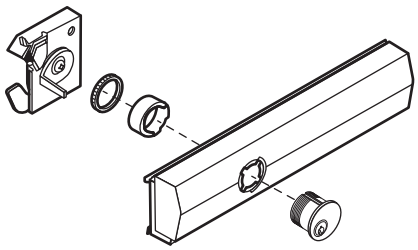

Surface and Concealed Vertical Rod Extension Kits

Used to extend the height of standard length rods for 7110(F)(8’max), 7120, 7160(F), 7170(F), and 7210 Series exit devices.

Rod Extension Assembly
2” 60-1510-0280-FIN (Panic)
6” 60-1510-0277-FIN (Panic)
12” 60-1510-0278-FIN (Panic)
12” 60-1510-0282-FIN (Fire Rated)
24” 60-1510-0281-FIN (Fire Rated)

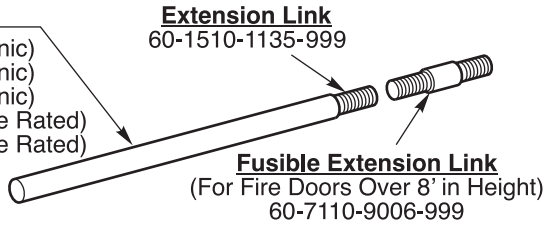

Optional Vertical Latches

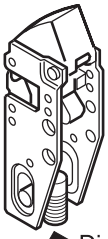

Top Pullman Latch
(Less Hold Back Feature For Use with Electric Strikes)
60-7010-0055-999

Direction of Rod Travel

Direction of Rod Travel

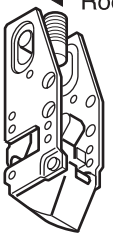

Bottom Pullman Latch
(For Use with Latch Track Thresholds)
60-7010-0051-999

MULLION PARTS

ITEM	PART NO.	DESCRIPTION
1		Mullion
	60-1500-1267-114	7’ for M100(F)
	60-1500-1265-114	8’ for M100(F)
	60-1500-1266-114	10’ for M100(F)
	60-7200-0011-FIN	Mullion Only, 8’ M300
2	60-1500-1283-078	Bracket, Upper Mounting
3		Bracket, Lower Mounting
	60-0019-1009-078	Panic
	60-2000-1164-078	Fire Rated
4	60-2000-9158-999	Anchor Pad (Fire Rated)
5	81-9500-0351-000	Screw Packet contains:
	81-0011-0616-059	Screw #12-24 x 3/4" FHM-PH (4)
	81-6219-2708-059	Set Screw 5/16-18 x 3/8" (1)
	81-6419-2714-059	Set Screw, Half Dog 5/16-18 x 5/8" (2)
	60-7000-1324-048	Screw 1/4-20 x 3/4" RHM-PH (2)
	99-9999-7161-059	Lock Washer 1/4" (2)
	99-9999-6037-999	Masonry Anchor 1/4-20 (2)
6	81-9500-0371-078	Angle Bracket Packet contains:
		Angle Bracket (1)
		Screw #12-24 x 7/16" OHM-PH (2)
7	81-9500-1417-078	Stabilizer Kit (optional) contains:
		Bracket, Stabilizer (2)
		Stabilizer (2)
		Spacer, Stabilizer (4)
		Screw, #10-24 x 3/4" FHM-PH (4)
		Screw, #10-24 x 1" FHM-PH (4)
Not Shown	81-9500-1524-114	Parts Packet contains: Items 2, 3, 4, 5 and 11
8	81-9500-1416-FIN	Mounting Bracket Packet contains:
		Mullion Mounting Plate (2)
		Screw, 1/4-20 x 1/2 FHUM-PH (6)
		Anchor, 1/4-20 Masonry (3)
9	81-9500-1414-FIN	Carriage Bolt Packet contains:
		Bolt, 1/4-20 x 1-3/4” Carriage
Not Shown	81-9500-1523-FIN	Parts Packet contains: Items 7, 8 and 9
10	00-0000-3516-000	Spacer, Mullion
11	81-9500-1561-058	Door Bracket Packet contains:
	60-2000-1156-058	Bracket, Door (2)
	81-0011-0516-058	Screw, #10-24 x 3/4 FPHMS (8)
12	00-0000-3432-000	KRM150 Retro Fit Kit contains:
	60-1500-0150-078	Bracket, Top, Final Assembly
	60-1500-0153-078	Bracket Assembly, Mounting
	60-7000-1419-078	Shim, Mullion (2)
	60-7000-1413-048	Bracket, Cylinder Anti-Rotation
Not Shown	81-9500-1585-000	KRM150 Screw Pack contains:
	81-0011-0616-999	Mounting Screw, #12 x 24 x 3/4 FHPMS (4)
	60-7000-1413-048	Bracket Cylinder Anti-Rotation
	81-0014-0406-036	Bracket Mounting Screw 8-32 x 5/16"
	81-3711-0412-048	Cylinder Screw 8 x 32 x 1/2"
13	See Page 71	Cylinder, Mortise

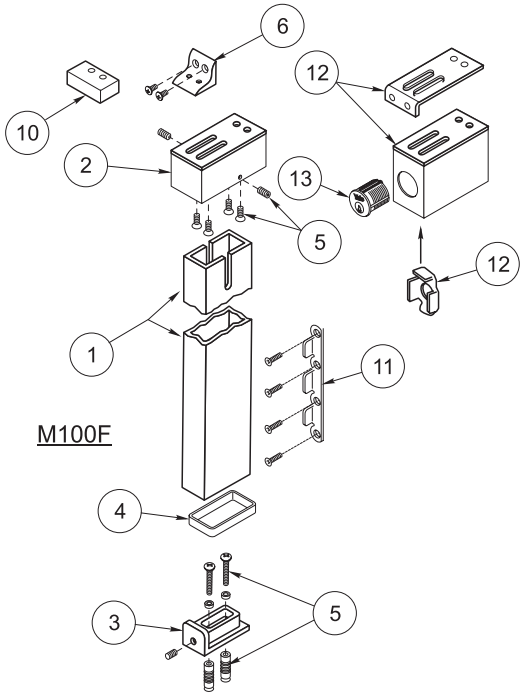

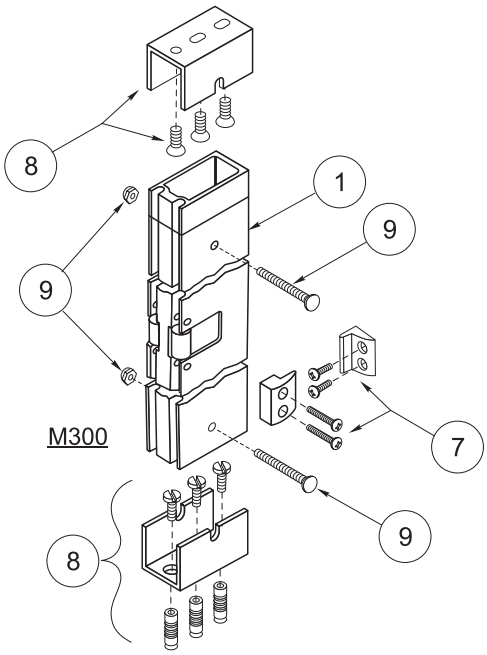

HANDING INSTRUCTIONS

Rim Devices

7100(F), 7150(F), 7200(F) Series

These devices are non-handed.

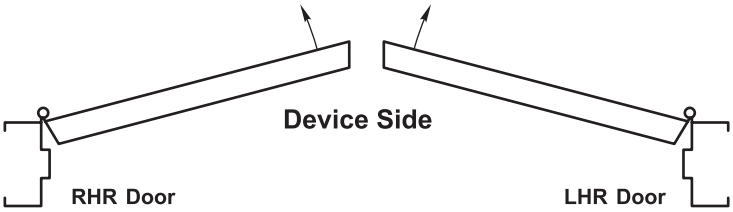

Vertical Rod Devices, Surface and Concealed

7110(F), 7120(F), 7160(F), 7170(F), 7210(F), 7220 Series

Remove four screws and vertical lifter assembly. Turn device to opposite (180 degrees) orientation, insert lifter assembly and reinstall screws.

NOTE: Lifter must fit <u>under</u> lift block as shown.

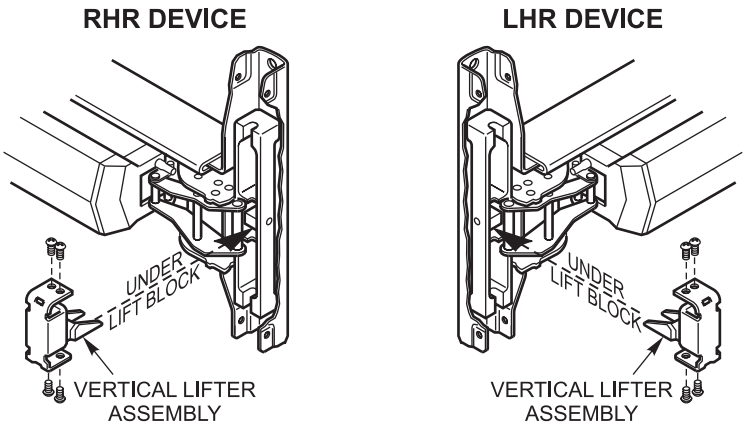

HANDING INSTRUCTIONS

Lever Handle Trim

1. Remove cotter pin.
2. Remove castle nut.
3. Observe spring orientation:

   LHR: Red spring (part # 60-7000-1225-999) Short lead is at 11 o'clock and long lead is to lever side of stump at 6 o'clock.

   RHR: Blue spring (part # 60-7000-1224-999) Short lead is at 11 o'clock and long lead is to lever side of stump at 6 o'clock.
4. Remove round housing, spring and spacer.
5. Note orientation of "gap" which governs rotation in gear and remove gear.
6. Rotate lever 180°.
7. Flip gear over and reinstall, observing proper gap orientation for new direction of rotation:

   LHR 6 - 8 o'clock

   RHR 4 - 6 o'clock
8. Install spring of opposite hand (color). Place spring around spindle with long lead against gear and to lever side of post. Place housing (gap side toward lever) over spring and spindle until square in housing begins to slide down on spindle. While applying downward pressure on housing, wind short lead of spring toward lever until housing snaps into place.
9. Replace spacer in housing. Spring, housing and spacer should now be oriented as indicated in step 3 above.

   Note: Housing gap will always be to the lever side and spring will be slightly preloaded when properly installed.
10. Be sure lever thimble is seated properly in escutcheon. Reinstall nut snugly, but do not over tighten. Lever should rotate freely.
11. Replace cotter pin.

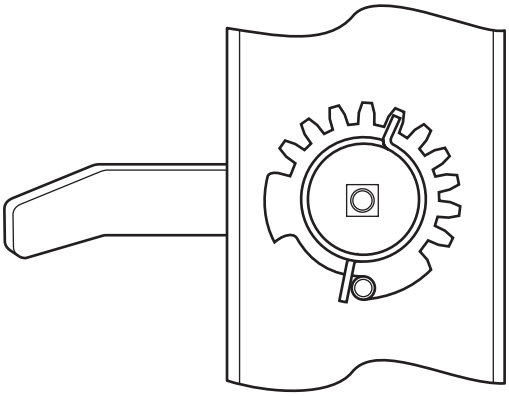

RIGHT-HAND REVERSE (BLUE SPRING)

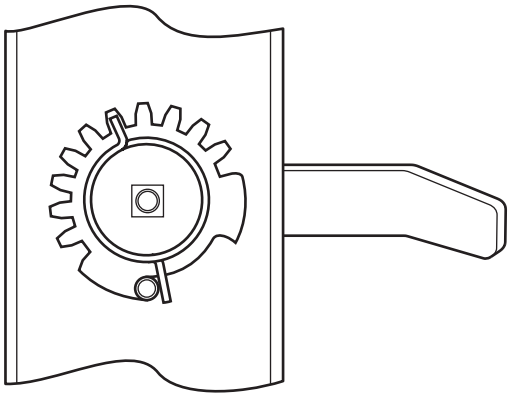

LEFT-HAND REVERSE (RED SPRING)

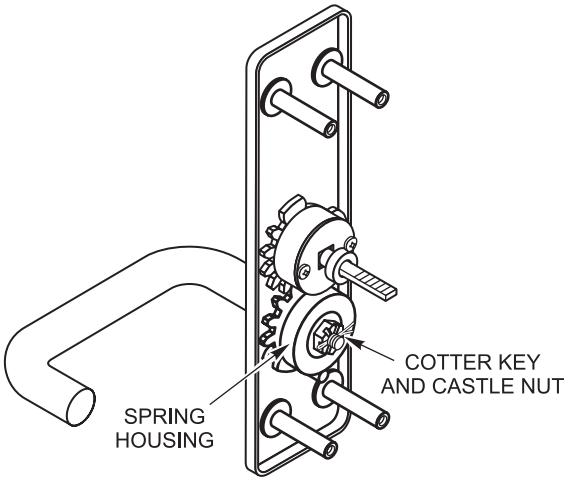

SURFACE VERTICAL ROD EXIT DEVICES

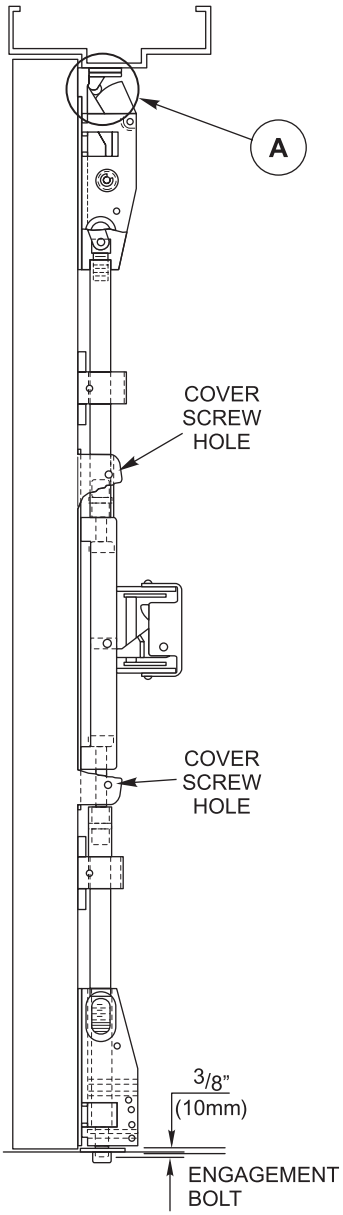

7110

If top latch does not engage properly, check alignment. When locked, latch bolt should not be preloaded by strike (**Area A**). Shim or reposition strike if necessary.

Bolts extend automatically when door closes and top strike hits tripping lever. Top bolt should retract flat. Bottom bolt should travel 1/2" and engage 3/8" into strike in down position, without dragging on floor surface in up position.

Rod Adjustment

1. Remove active case cover screws and cover.
2. Remove rod guide cover screws and rod guide covers. Tilt rods, top and bottom, out of engagement in active case and out of rod guides.
3. **Adjust top rod first.** Push up on top rod to fully retract top latch with hold back feature engaged. With device in dogged position (panic devices) or touchbar fully depressed (fire devices), adjust top rod so that the square head of the rod connector slides into engagement in the active case. Shorten rod an additional 1/2 turn.
4. **Adjust bottom rod.** With top rod engaged, top latch retracted in hold back position, and touch bar dogged or fully depressed, adjust bottom rod so that the deadbolt clears the strike by 1/16". The bottom rod should be in position in the active case with the square head of the connector hanging in the slide.
5. **Check device operation** by opening and closing the door. When present, operate the device with the outside trim. An additional minor adjustment may be required for full retraction and correct strike engagement.
6. Reinstall the rod guide covers and the active case cover.

Maintenance

1 . Periodically remove covers and coat mechanisms with an appropriate lubricant. This is regularly required in corrosive environments for proper product operation.
2. Check mounting fasteners periodically. Retighten if found loose. Apply screw locking compound or change part fasteners if screws continue to back out.
3. Periodic checks and adjustments of rods may be required to compensate for door or frame sag.

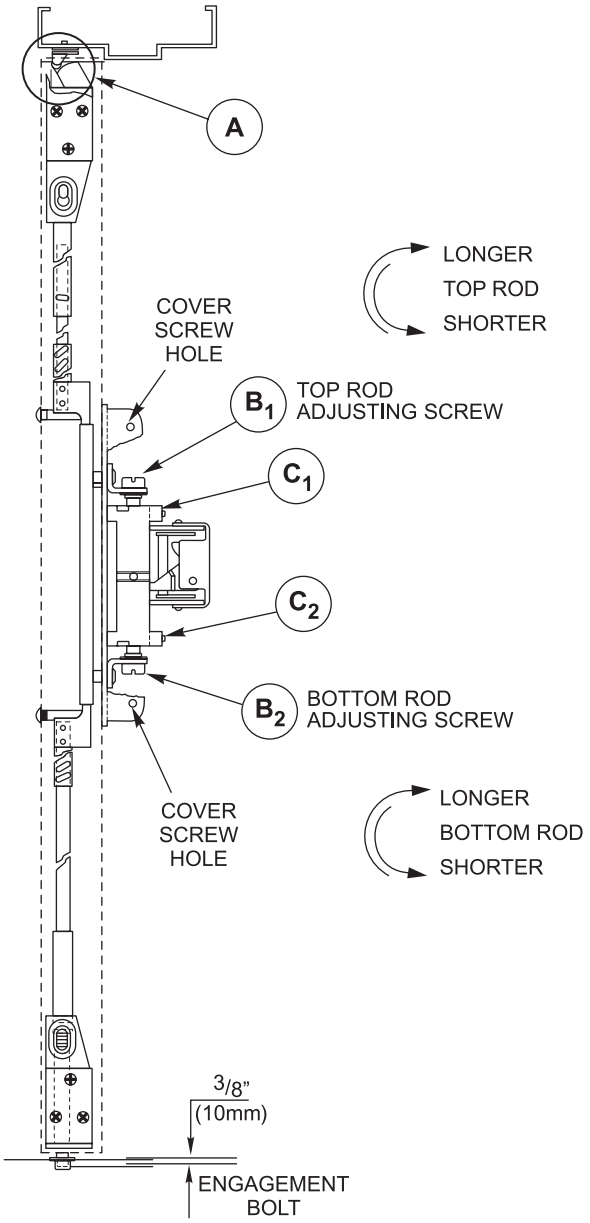

7120

Rods should move freely inside door. Bolts extend automatically when door closes and top strike is tripped. Top bolt should retract flat. Bottom bolt should travel 1/2" and engage 3/8" into strike in down position, without dragging on floor surface in up position.

If top latch does not engage properly check alignment. When locked, latch bolt should not be preloaded by strike (**Area A**). Shim or reposition strike if necessary.

Rod Adjustment for Bolt Throw

1. Remove Latch assembly cover screws and cover.
2. Use 3/32" Allen wrench to loosen set screws $\mathbf{C_1}$ and $\mathbf{C_2}$.
3. Adjusting screws $\mathbf{B_1}$ and $\mathbf{B_2}$ only provide fine rod adjustment. If screws bottom out before proper device operation, door and device must be removed. Larger adjustments may then be made either by threading rod in or out, or by moving cotter pin to different hole in rod.
4. **Adjust top rod first.** With device in dogged position (panic devices) or touchbar fully depressed (fire devices), adjust top rod so that the top latchbolt is flush and the hold back feature is engaged. Lengthen top rod an additional 1/2 turn.
5. **Adjust bottom rod.** With top latch retracted in hold back position, and touch bar dogged or fully depressed, adjust bottom rod so that the deadbolt clears the strike by 1/16". The bottom rod should be in position in the active case with the square head of the connector hanging in the slide.
6. **Check device operation** by opening and closing the door. When present, operate the device with the outside trim. An additional minor adjustment may be required for full retraction and correct strike engagement.
7. When finished, lock adjusting screws in place with Allen set screws.

   Caution: To avoid thread damage and provide positive locking, be sure Allen set screws engage flats on adjusting screws.

Maintenance

1. Periodically remove covers and coat exposed mechanisms with an appropriate lubricant. This is regularly required in corrosive environments for proper product operation.
2. Check mounting fasteners periodically. Retighten if found loose. Apply screw locking compound or change part fasteners if screws continue to back out.
3. Periodic checks and adjustments of rods may be required to compensate for door or frame sag.

TROUBLESHOOTING GUIDE

1. Many problems with the operation of exit devices are caused by factors other than the device itself. Among the most common is a misalignment or an improper fit of the door within the frame.

2. Another common source of problems is improper installation. Even if all cutouts and screw holes are properly located, exit devices must be securely fastened to properly reinforced doors. Hollow doors and frames with a structural thickness (metal skin plus reinforcement, or solid hardwood) must have at least three full screw threads to be considered reinforced.

3. Most problems with dogging occur on vertical rod devices. When the dogging function is hard to engage or will not work at all, the rods may be incorrectly adjusted allowing the mechanism to bottom out. Readjust rods per the device instructions or as outlined on the previous pages.

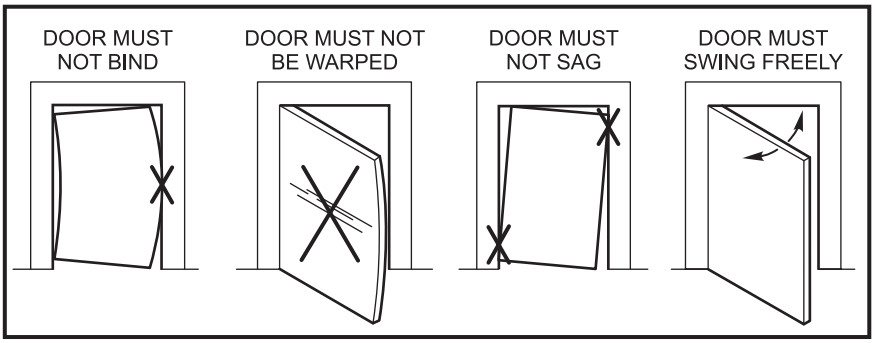

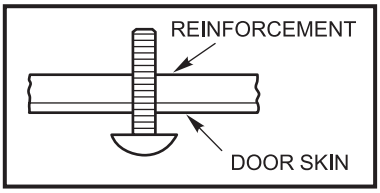

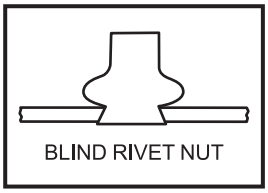

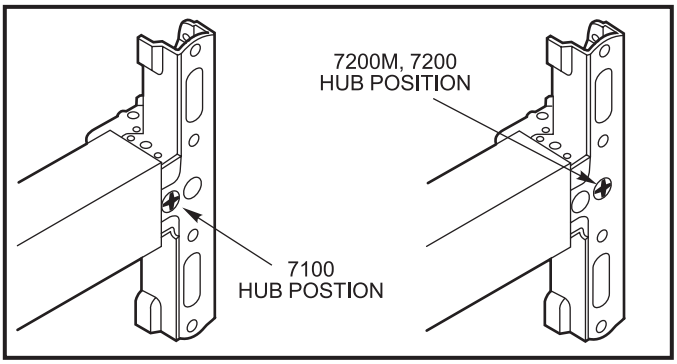

DIFFERENCE IN ACTIVE HEADS

online literature and templates

For the latest information on Yale Commercial Lock and Hardware products, visit our website at www.yalelocks.com.

Click on the "Literature" button to find:

- Catalogs
- Parts manuals
- Templates
- Specifications
- Installation instructions

Yale® customers can click on the ebusiness symbol on the website to register for an ebusiness account to:

- Check the status of orders
- Check availability of Warehouse and Quick-Ship items
- Track your order and confirm delivery
- Receive email notification of template changes

And More...

www.yalelocks.com

Yale Commercial Locks and Hardware

Address: 1902 Airport Road, Monroe, NC 28110 USA

Tel: 1-800-438-1951 ● *Fax:* 1-800-338-0965 ● www.yalelocks.com

Yale-Corbin Canada Ltd.

Address: 6940 Edwards Boulevard, Mississauga, Ontario, Canada L5T 2W2

Tel: 1-800-461-3007 ● *Fax:* 1-800-461-8989 ● www.yalecorbin.on.ca

Yale®, Yale Security Inc.®, SquareBolt®, PowerMatic® are registered trademarks of Yale Security Inc. SecureX™ is a trademark of Yale Security Inc. Folger Adam® is a registered trademark of Folger Adam Security Inc. Other product brand names may be trademarks or registered trademarks of their respective owners and are mentioned for reference purposes only. Copyright© 2002 Yale Security Inc. All rights reserved. These materials are protected under US copyright laws. All contents current at time of publication. Yale Security Inc. reserves the right to change availability of any item in this bulletin, its design, construction, and/or its materials.

The ASSA ABLOY Group is the world's leading manufacturer and supplier of locking solutions, dedicated to satisfying end-user needs for security, safety and convenience.

An ASSA ABLOY Group company

ASSA ABLOY

42210-12/02R