Yale®

For 8700 Series Locksets

Designer Mortise Trim

CATALOG

An ASSA ABLOY Group brand

ASSA ABLOY

TIME TESTED QUALITY

INTRODUCTION

Yale's Designer Trim for the 8700 Series mortise lock combines engineered security with architectural design savvy to bring you an aesthetically pleasing line of lever trims that meet the highest level of key-operated lockset protection.

Composed of eight lever designs with a choice of two escutcheons or roses, all designs are through-bolted for proper alignment and increased security.

Typical commercial applications are for anywhere that a prestigious or exquisite design statement needs to be made, which may include:

- Executive office areas
- High-end condominiums
- Hotels
- Banking centers
- Municipal buildings
- Upscale retail establishments
- Airport business clubs
- Theaters

CONTENTS

Introduction 2
Roses and Escutcheons 3
Trim Designs 4-7

LIFETIME PVD FINISH WARRANTY

Yale Security Inc. (the "Company") warrants that the Physical Vapor Deposition (PVD) finish will not corrode, tarnish, wear, discolor or peel under normal use and service for the lifetime of the part to which the PVD finish has been applied.

This warranty does not cover defects or damage arising from improper installation, lack of or improper maintenance, improper storage, shipping and handling, misuse, abuse, accident, unauthorized service, scratches, or contact with abrasive cleaners, including without limitation hyrdrogen peroxide.

The only liability of the Company in tort or contract whether under this warranty or otherwise shall be limited to repair or replacement of any product or component part which shall prove defective as covered by this warranty.

FINISHES

ANSI Code	Finish
605*	Bright brass, clear coated
606*	Satin Brass, clear coated
625	Bright Chrome Plated

***Optional PVD finish available at an additional charge. Physical Vapor Deposition (PVD) is a technologically advanced finish coating that provides the ultimate surface protection against environmental elements and everyday wear and tear.**

HOW TO ORDER

The following is a hypothetical item listed in proper sequence for complete and simplified ordering.

QTY.	A	B	C	D	E	F	G	H	I
	Design Symbol	List Number	Highest Keying Level	Description	Finish	Hand	Cylinder	Door Thickness	Supplementary Specifications
100	CBE1	8707FL	GMK	Lockset	3	RHR	2153	1-3/4	*

***For other than standard requirements, refer to the Yale® 8700 Series Mortise Lockset catalog for keying, cylinder and strikes.**

ROSES AND ESCUTCHEONS

Yale® Designer Trims are available with a choice of two escutcheons and two roses. When ordering, utilize the design symbol (example: OS) and specific escutcheon or rose symbol (E1, E2, R1 or R2). An example of a complete symbol, including lever design, would be OSE1.

E1

E2

R1

R2

Emergency
Release

Thumbturn
1-1/2" x 1" Projection

TRIM DESIGNS

OSLO

OSE1

OSR1

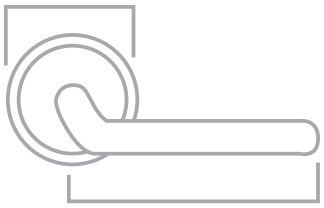

Projection: 2-3/8"

LISBON

LIE1

LIR1

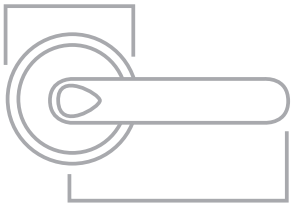

Projection: 2-5/8"

Escutcheon E1 and Rose R1 shown with above lever designs.
See page three for other roses and escutcheons.

TRIM DESIGNS

RIO

RIE1

RIR1

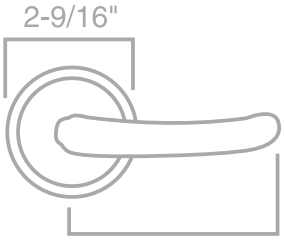

Projection: 2"

BRUSSELS

BLE1

BLR1

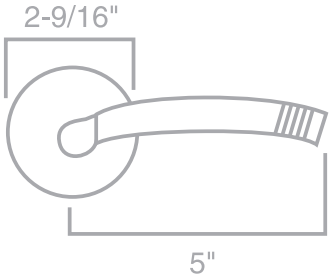

Projection: 2-1/2"

Escutcheon E1 and Rose R1 shown with above lever designs.
See page three for other roses and escutcheons.

TRIM DESIGNS

CHARLESTON

CHE1

CHR1

Projection: 2-3/8"

HAMPTON

HAE1

HAR1

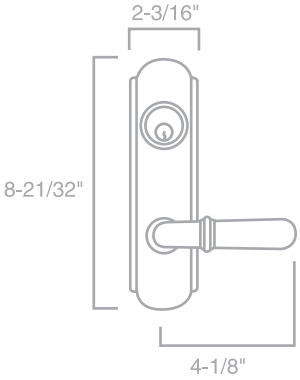

Projection: 2-5/8"

Escutcheon E1 and Rose R1 shown with above lever designs.
See page three for other roses and escutcheons.

TRIM DESIGNS

CASABLANCA

CBE1

CBR1

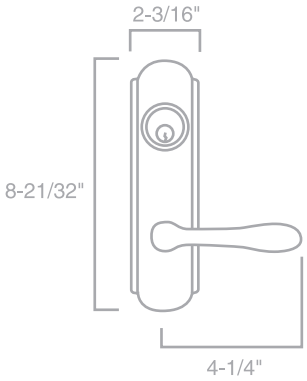

Projection: 2-7/16"

WELLINGTON

WEE1

WER1

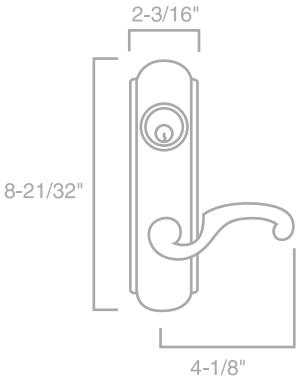

Projection: 2-1/2"

Escutcheon E1 and Rose R1 shown with above lever designs.
See page three for other roses and escutcheons.

online literature and templates

For the latest information on Yale Commercial Lock and Hardware products, visit our website at www.yalelocks.com.

Click on the "Literature" button to find:

- Catalogs
- Parts manuals
- Templates
- Specifications
- Installation instructions

Yale® customers can click on the ebusiness symbol on the website to register for an ebusiness account to:

- Check the status of orders
- Check availability of Warehouse and Quick-Ship items
- Track your order and confirm delivery
- Receive email notification of template changes

And More...

www.yalelocks.com

Yale Commercial Locks and Hardware

Address: 1902 Airport Road, Monroe, NC 28110 USA

Tel: 1-800-438-1951 • *Fax:* 1-800-338-0965 • www.yalelocks.com

Yale-Corbin Canada Ltd.

Address: 6940 Edwards Boulevard, Mississauga, Ontario, Canada L5T 2W2

Tel: 1-800-461-3007 • *Fax:* 1-800-461-8989 • www.yalecorbin.on.ca

Yale® and Yale Security Inc.® are registered trademarks of Yale Security Inc. Other product brand names may be trademarks or registered trademarks of their respective owners and are mentioned for reference purposes only. Copyright© 2002, 2003 Yale Security Inc. All rights reserved. These materials are protected under US copyright laws. All contents current at time of publication. Yale Security Inc. reserves the right to change availability of any item in this bulletin, its design, construction, and/or its materials.

The ASSA ABLOY Group is the world's leading manufacturer and supplier of locking solutions, dedicated to satisfying end-user needs for security, safety and convenience.

An ASSA ABLOY Group brand

ASSA ABLOY

42114-MA-15.0-4/03R