Yale®

DOOR CLOSERS

2300BC SERIES

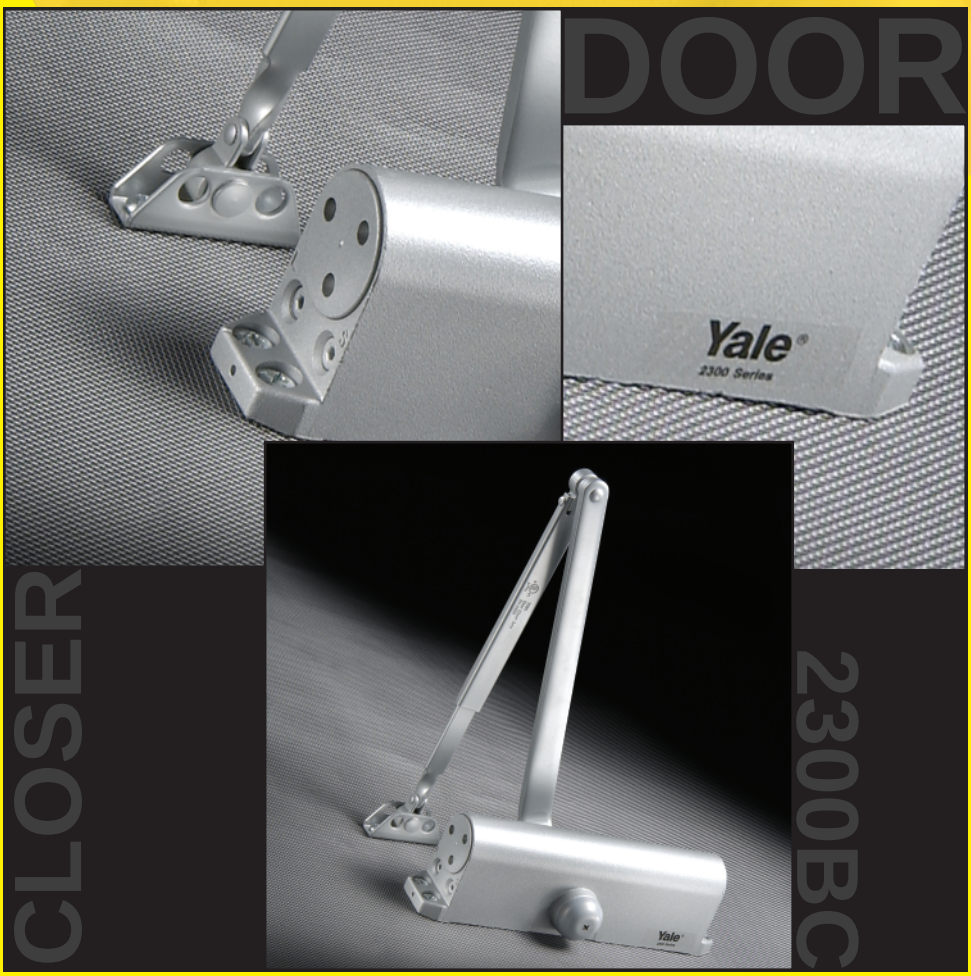

CATALOG

An ASSA ABLOY Group brand

ASSA ABLOY

THE ENGINEER'S CHOICE

YALE® 2300BC INTRODUCTION

The 2300BC is a durable, economically priced door closer designed for commercial exterior and interior doors such as storefront and industrial applications.

- Spring size 2, 3, 4, 5
- Separate and independent valve for sweep speed and latch speed
- Adjustable backcheck standard
- Regular and top jamb mount: bi-packed
- Parallel mount optional
- Friction hold open arm optional
- UL listed and compliant with UL10C for positive pressure
- 5-year limited warranty
- ANSI/BHMA A156.4 Grade 3

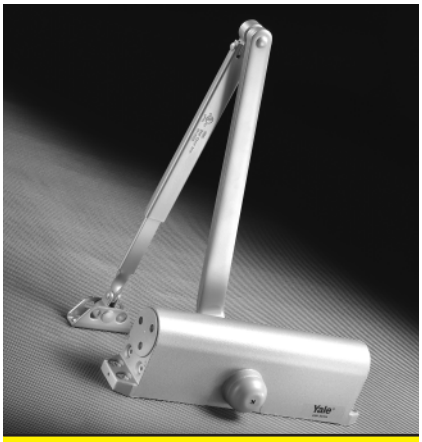

CONTENTS

Introduction 2
Compliance Standards 2
Finishes 2
Applications 3
Features 4
Accessories 5
Technical Details 6
Parts List 8
How To Order 10

COMPLIANCE STANDARDS

All series 2300BC comply to ANSI A156.4 Grade 3 Specification. All Yale® series 2300BC closers with non-hold open arms are listed by Underwriters' Laboratories for labeled fire doors. This includes compliance to UL10C and UBC-72 (1997) for 3-hour assemblies. The product is manufactured in an ISO 9001 facility. These closers are also listed by California State Fire Marshal and New York City Board of Standards and Appeals; Materials and Equipment Acceptance Division.

FINISHES

All door closers are painted with waterborne acrylics. All steel parts, mounting plates and brackets are powder coated. The closers will withstand 100 hours of salt spray.

Sprayed Finishes

Description	Specify New *Yale* (BHMA) Designation	Complements the Following Finishes	Old *Yale* Designation
Aluminum	689	628, 625, 629, 630, 651, 652	AL
Statuary Bronze	690	640, 613	STAT
Dull Bronze	691	612, 637, 639	DB
Black	693	315	315
Medium Amber	694		312
Gold	696	605, 606, 632, 633	GB
Prime Coat (Beige)	600		SRI

APPLICATIONS

REGULAR ARM

This is the only pull-side application for the 2300BC series door closer. It is the most power-efficient application for a door closer. Sufficient frame, door and/or ceiling clearance must be considered.

Since the arm assembly projects directly out from the frame, this application may present an aesthetics issue or be prone to vandalism.

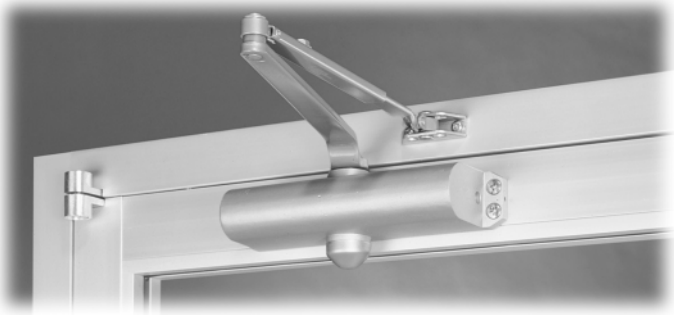

PARALLEL ARM

This application provides the most appealing design appearance for the 2300BC series door closer. It is on the push side of the door and the arm assembly extends almost parallel to the door. In the closed position, there is very little or no hardware projecting beyond the frame face in most situations.

Due to the geometry of the arm it is approximately 25% less power-efficient than a regular arm application.

The entire closer and arm assembly are mounted below the frame stop, requiring a top rail clearance on the door of 5" (127mm), without using a drop plate. A 2388 drop plate requires a top rail clearance of just 2-5/8" (67mm).

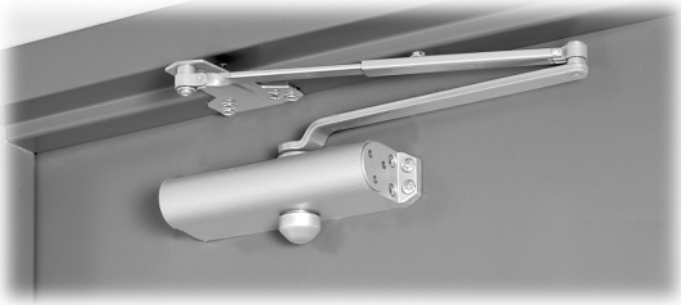

TOP JAMB

For efficiency reasons this application provides the best alternative to the regular arm application. There must be sufficient frame face and/or ceiling clearance for this application. It requires a top rail on the door of just 1-7/8" (48mm). This application provides the best door control for doors in exterior walls that swing out of a building. It will accommodate frame reveals to a maximum of 2-7/8" (73mm).

The entire door closer and arm assembly project from the frame, similar to the regular arm application, where matters of appearance can be of concern.

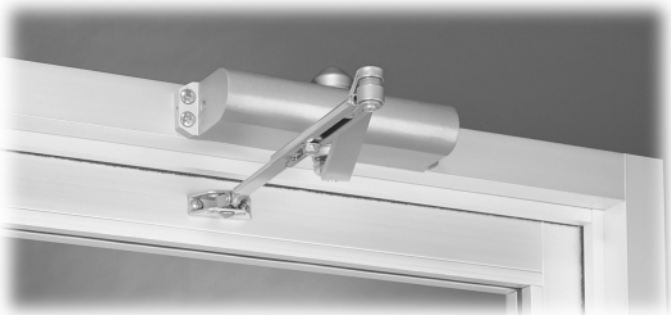

FEATURES

Aluminum Alloy Housing
Closer bodies are constructed of a special aluminum alloy, carefully selected to accommodate interactive steel components and operating conditions.

Rack & Pinion Operation
Provides a smooth constant control of the door through its full opening and closing cycle. 180° door swing can be achieved when door, frame, hardware and arm function do not interfere.

Closer Fluid
All door closers are supplied with a temperature stable, multi-viscosity fluid. This fluid will permit the door closer to perform within a wide temperature range from very high to as low as -40°F.

Non-Handed
Pinion shaft extends vertically through the closer body in both directions. This permits the closer to be positioned on either right or left hand doors for most applications.

Non-Critical Control Valves
All control valves for sweep speed, latch speed and backcheck cushioning are non-critical and are adjusted by a standard 1/8" (3mm) hex wrench.

Adjustable Backcheck Cushion Valve
Provides control of the door in the opening cycle, beginning at approximately 75° of door opening. It slows/cushions the door opening when the door is forcibly opened beyond its pre-adjusted speed limitation.

Adjust Power Shoe
Supplied as standard for a 15% (±7-1/2%) power adjustment by relocating the forearm at the shoe, for regular arm and top jamb non-hold open installations.

OPTIONAL FEATURES

Hold Open Arm
Closer arm has adjustable hold open feature (90° to 180°). This arm is non-handed. Order by suffixing “H” to the catalog number.

Fasteners
All closers are shipped with self-drilling, self-tapping and machine screws.

- Sleeve nuts (SN) are available as an option for all closers, and should be used on steel doors to prevent dimpling or where proper door reinforcement has not been provided.
- Standard sleeve nuts are for 1-3/4" (44mm) doors. 1-3/8" (35mm) or 2-1/4" (57mm) door thicknesses are available and must be specified.
- Through-bolts and grommet nuts (TBGN) are another fastener alternative for wood doors. Standard TBGN’s are for 1-3/4" (44mm) doors. 1-3/8" (35mm) or 2-1/4" (57mm) door thicknesses are available and must be specified. (TBGN's are not recommended for steel doors.)

ACCESSORIES

TOP JAMB CLOSER MOUNTING PLATE

Top Jamb - #2388 Drop Plate
For use when the door closer interferes with the ceiling or the frame face is too narrow to mount a closer body. This drop plate can be used to mount a closer on a frame face as narrow as 1-1/2" (38mm).

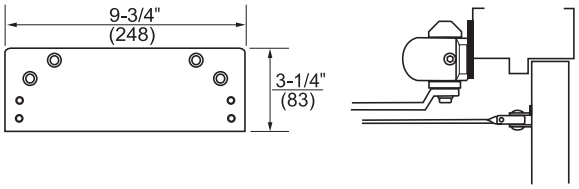

REGULAR ARM CLOSER MOUNTING PLATE

Parallel Arm - #2388 Drop Plate
For use where a narrow top rail prevents the closer from being mounted directly to the door surface. This drop plate can be used to mount a closer on a top rail as narrow as 2-5/8" (57mm).

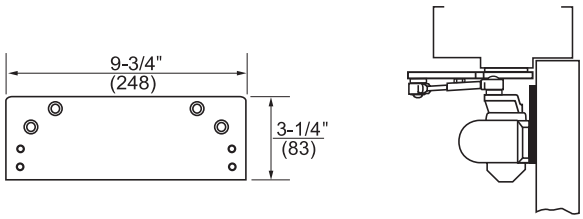

BRACKETS FOR NON-HOLD OPEN ARMS

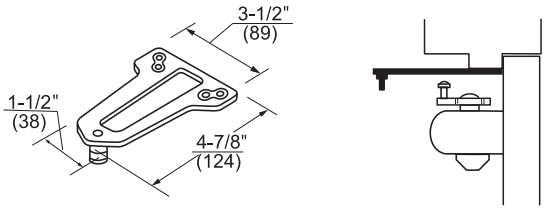

#289A Soffit Plate
This soffit plate is supplied to permit parallel arm mounting. It can be mounted where the frame soffit is as narrow as 1" (25mm).

BRACKETS FOR HOLD OPEN ARMS

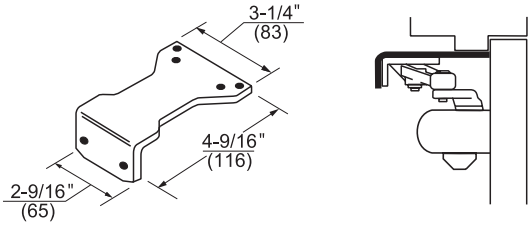

#588 Adapter Plate
This adapter plate is supplied standard with parallel arm hold open closer. It can also be used to convert hold open arms for parallel arm installation. It can be mounted where the frame soffit is as narrow as 1" (25mm).

TECHNICAL DETAILS

REGULAR ARM

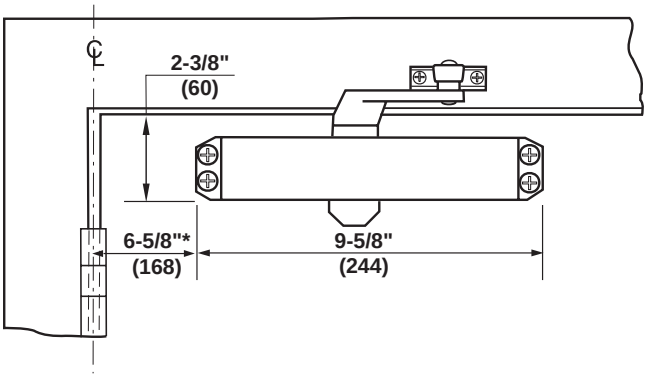

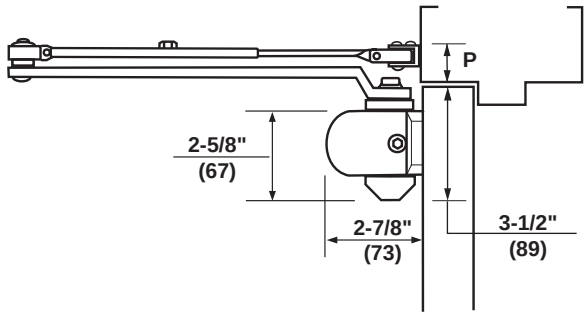

*Template position for 100° door opening

Door openings to 180° can be obtained if conditions permit.

For selection of door closer sizing, see charts on page 7.

Mounting holes for closer body are spaced 3/4" vertically x 9-1/16" horizontally.

P Minimum Ceiling Clearance	
Non-Hold Open	Hold Open
1-1/2" (38mm)	1-5/8" (41mm)

TOP JAMB

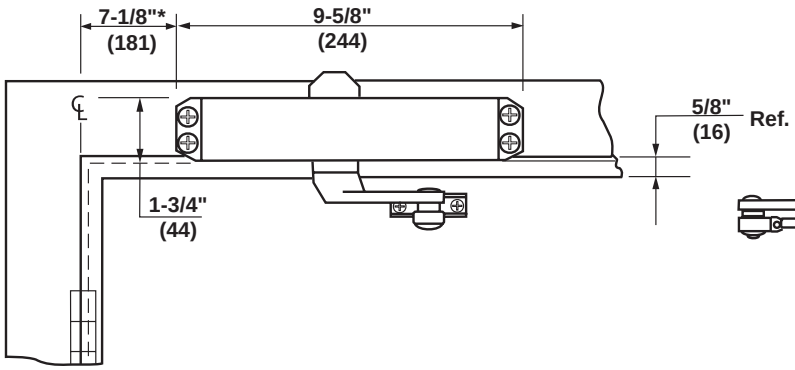

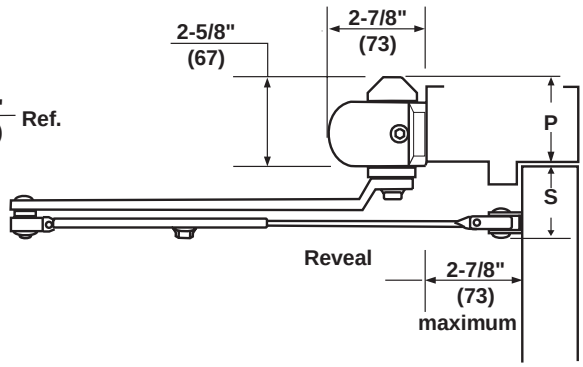

*Template position for 100° door opening

For selection of door closer sizing, see charts on page 7.

Mounting holes for closer body are spaced 3/4" vertically x 9-1/16" horizontally.

P Minimum Ceiling Clearance		S Minimum Top Rail 5/8" (16mm) Frame Stop	
Without Drop Plate	With 2388 Drop Plate	Without Drop Plate	With 2388 Drop Plate
2-5/8" (67mm)	1-3/4" (44mm)	1-7/8" (48mm)	3-3/8" (86mm)

TECHNICAL DETAILS

PARALLEL ARM

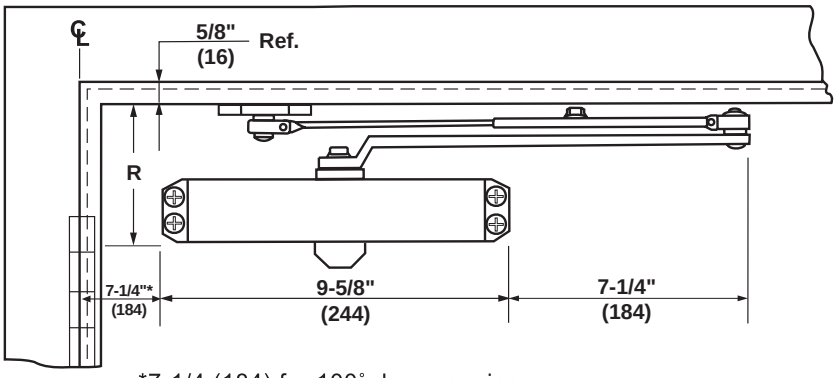

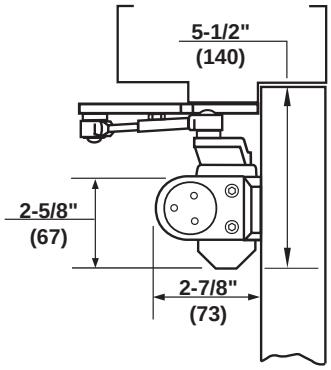

*7-1/4 (184) for 100˚ door opening.

*Template position for 100° door opening

Door openings to 180° can be obtained if conditions permit.

For selection of door closer sizing, see charts below.

Mounting holes for closer body are spaced 3/4" vertically x 9-1/16" horizontally.

Minimum Top Rail 5/8" (16mm) Frame Stop	
Without Drop Plate	With 2388 Drop Plate
5" (127mm)	2-5/8" (67mm)

DOOR CLOSER SIZE

Note: Door closing force is not adjustable. Correct size must be selected.

Interior Doors

Door Closer Size	Recommended Max. Door Width		
	Regular Arm	Top Jamb	Parallel Arm
2	34" (86cm)	34" (86cm)	32" (81cm)
3	40" (102cm)	40" (102cm)	38" (97cm)
4	48" (122cm)	48" (122cm)	46" (117cm)
5	—	—	52 (132cm)

Exterior Doors

Door Closer Size	Recommended Max. Door Width		
	Regular Arm	Top Jamb	Parallel Arm
2	30" (76cm)	30" (76cm)	28" (71cm)
3	34" (86cm)	34" (86cm)	32" (81cm)
4	40" (102cm)	40" (102cm)	36" (91cm)
5	48" (122cm)	48" (122cm)	42" (107cm)

All Dimensions are for reference only and are in inches (mm) unless otherwise noted. Door sizing information is based on installation on standard weight doors, 7'0" (213cm) high x 1-3/4" (44mm) thick; hung on anti-friction hinges and operating under normal conditions. Doors in excess of 7'8" (234cm) high or 1-3/4" (44mm) thick, templated openings beyond 150° or doors subject to wind or draft conditions will generally require the next larger size closer.

PARTS LIST

NON-HOLD OPEN ARM ASSEMBLIES

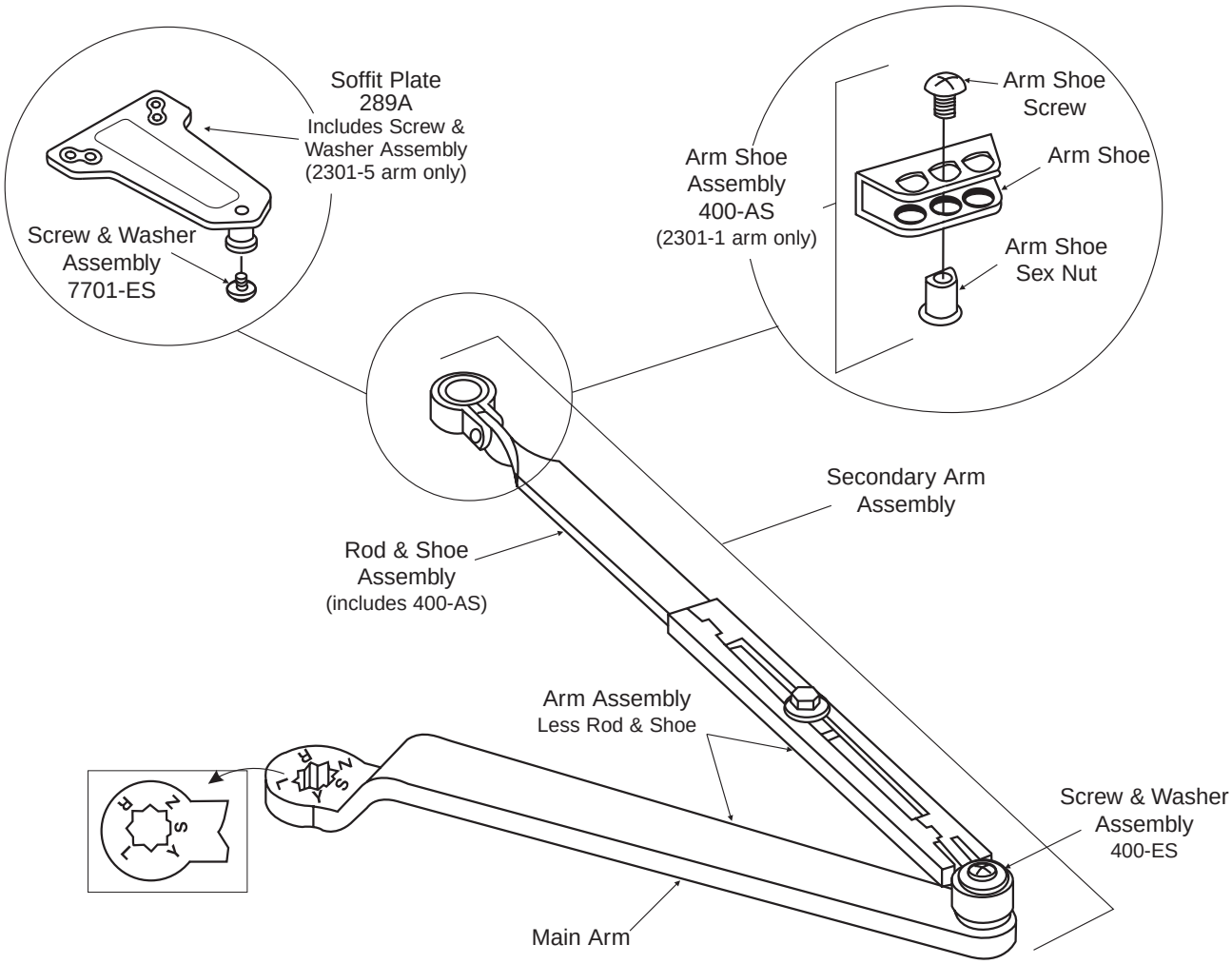

Closer Series	Complete Arm	Main Arm	Arm Assembly Less Rod and Shoe	Secondary Arm Assembly	Rod and Shoe Assembly
2300BC	2301-1	400-1M	2301-1W	2301-111	2301-11
P2300BC	2301-5			2301-115	2301-15

PARTS LIST

HOLD OPEN ARM ASSEMBLIES

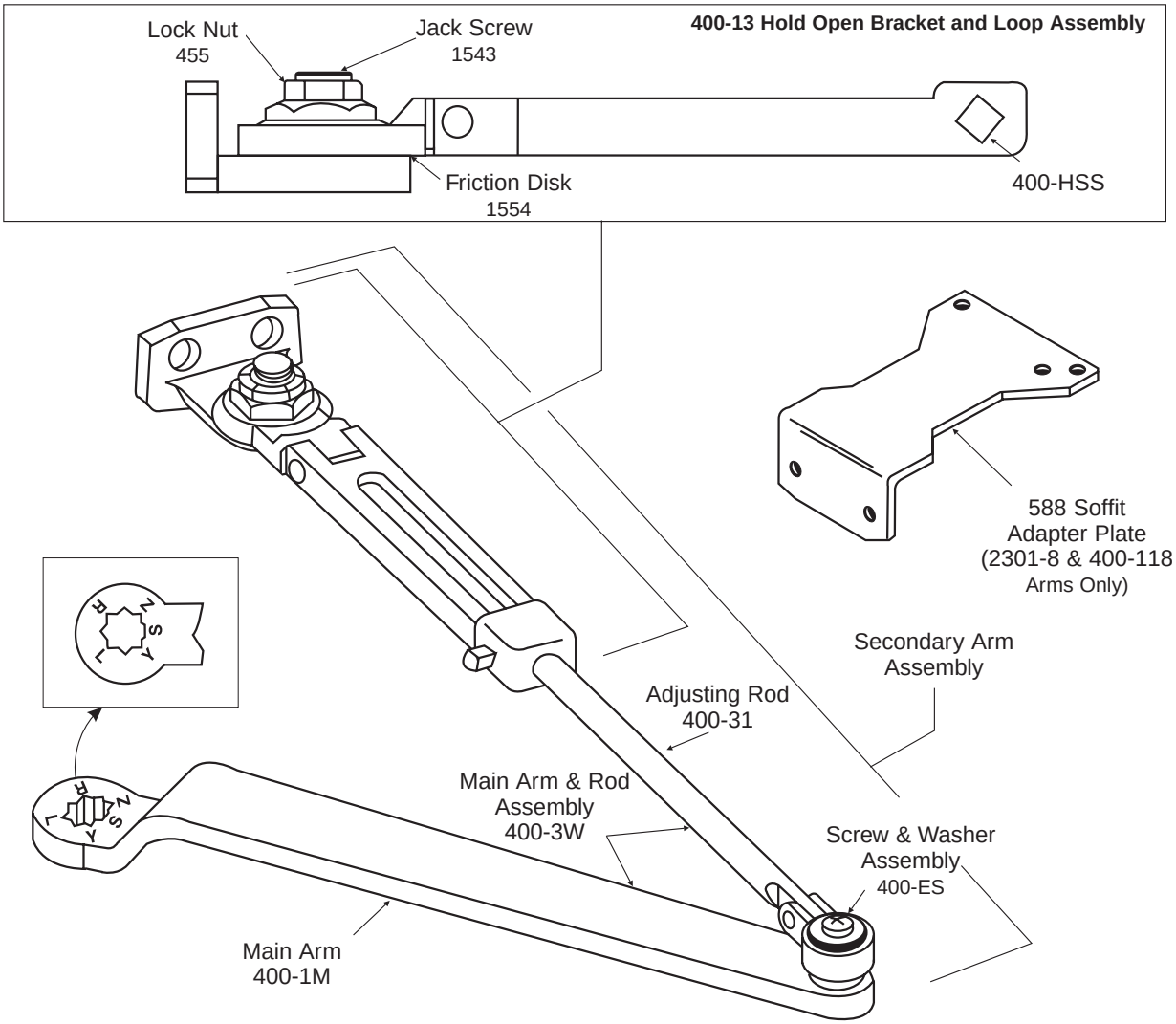

Closer Series	Complete Arm	Secondary Arm Assembly
2300BCH	2301-3	400-113
P2300BCH	2301-8	400-118

HOW TO ORDER

P Prefixes	230 First, Second & Third Digit	2 Fourth Digit Specifies Size	BC	H Suffix
No Prefix - 2300 series regular and top jamb mount P - 2300 parallel arm only	Defines closer series	2, 3, 4, 5 - Defines closer size (See sizing charts on page 7)	Adjustable backcheck cushioning (Standard)	H - Hold open arm (Optional)

NOTES

online literature and templates

For the latest information on Yale Commercial Lock and Hardware products, visit our website at www.yalelocks.com.

Click on the "Literature" button to find:

- Catalogs
- Parts manuals
- Templates
- Specifications
- Installation instructions

Yale® customers can click on the ebusiness symbol on the website to register for an ebusiness account to:

- Check the status of orders
- Check availability of Warehouse and Quick-Ship items
- Track your order and confirm delivery
- Receive email notification of template changes

And More...

www.yalelocks.com

Yale Commercial Locks and Hardware

Address: 1902 Airport Road, Monroe, NC 28110 USA

Tel: 1-800-438-1951 • *Fax:* 1-800-338-0965 • www.yalelocks.com

Yale-Corbin Canada Ltd.

Address: 6940 Edwards Boulevard, Mississauga, Ontario, Canada L5T 2W2

Tel: 1-800-461-3007 • *Fax:* 1-800-461-8989 • www.yalecorbin.on.ca

Yale® and Yale Security Inc.® are registered trademarks of Yale Security Inc. Other product brand names may be trademarks or registered trademarks of their respective owners and are mentioned for reference purposes only. Copyright© 2001, 2003 Yale Security Inc. All rights reserved. These materials are protected under US copyright laws. All contents current at time of publication. Yale Security Inc. reserves the right to change availability of any item in this bulletin, its design, construction, and/or its materials.

The ASSA ABLOY Group is the world's leading manufacturer and supplier of locking solutions, dedicated to satisfying end-user needs for security, safety and convenience.

An ASSA ABLOY Group brand

ASSA ABLOY

42069-6/03R