Yale®

ELECTRONIC LOCK

TOUCHCODE® 99

CATALOG

An ASSA ABLOY Group brand

ASSA ABLOY

SIMPLY LOGICAL

Yale's Touchcode® 99 Series electronic mortise and cylindrical locksets are designed to provide the most reliable moderately-priced keyless entry solutions available today.

Utilizing state-of-the-art electronics and keypad code technology, *Touchcode 99* is the perfect provider to access control needs in the industrial, commercial, residential and hospitality marketplace. It can be used in interior as well as protected exterior applications, adding location versatility and convenience.

This stand-alone battery-operated series allows up to 99 users, and programming of the lock is done at the keypad, making it both easy to use and simple to manage. No separate programmer and no hard wiring required.

With these and many more smart features, including visual function indicators, mechanical key override and a diverse line of lever and knob designs, simple logic makes the Touchcode 99 series the perfect choice when selecting your electronic access control hardware.

PRODUCT DESCRIPTION

Touchcode 99 is a self-contained battery-operated entry control system with a non-volatile solid state memory, meaning your codes and instructions will be there whether you remove power for five minutes or five years. The Touchcode 99 monitors battery voltage each time a code is entered and will notify the user when it is time to change the batteries by slowing down the keypress response (yellow LED blink). When the Touchcode 99 signals low voltage, there are typically several hundred entries left. Alkaline battery life typically allows one year of operation.

UNDERWRITERS LABORATORIES

Yale® T8790/T5490 Series Touchcode Locks are rated by Underwriters Laboratories for use in single point locking operations of labeled openings under UL 38G5.

Cylindrical Lock

Mortise Lock

CONTENTS

Introduction 2
Product Description 2
UL Listing 2
Finishes 2
Basic Operation 3
Battery Replacement 3
Features/Specifications 4
Functions 5
Trim Design 6-7
How To Order 7

FINISHES

ANSI Code	Finish
605	Bright brass, clear coated
606	Satin brass, clear coated
609	Satin brass, blackened, satin relieved, clear coated
612	Satin bronze, clear coated
613	Satin bronze, oxidized and oil rubbed
616	Satin bronze, blackened, satin relieved, clear coated
619	Satin nickel plated
625	Bright chrome plated
626	Satin chromium plated
629	Bright stainless steel
630	Satin stainless steel

OPERATION

BASIC OPERATION

The outside lever/knob is always locked. The inside lever/knob is always free. The *Touchcode* 99 allows up to 99 individual user codes to be valid. Codes may be from one to six digits in length, and digits may be repeated. All programming is accomplished easily from the front of the keypad utilizing LED guidance. Changing codes takes only a matter of seconds for an authorized user.

Programming Functions
- Change Master Code
- Add/Change User Code
- Delete User
- Keypress Feedback (LED ON/OFF)
- Lock OPEN (LED ON/OFF)
- Clear Memory

TOUCHODE® OPERATION

The Master Code is always user one (1). The lock can be operated by entering the master code and pressing the # sign or by entering a valid user code and pressing the # sign. When a valid user code is entered, the outside trim will unlock for three seconds and then relock.

REPLACING BATTERIES

The inside battery cover is easily removed for battery replacement. Each lock contains a power pack of eight "AA" batteries, which typically last for one year.

Battery compartment with cover

Replacing batteries

FEATURES/SPECIFICATIONS

MORTISE LOCK SERIES

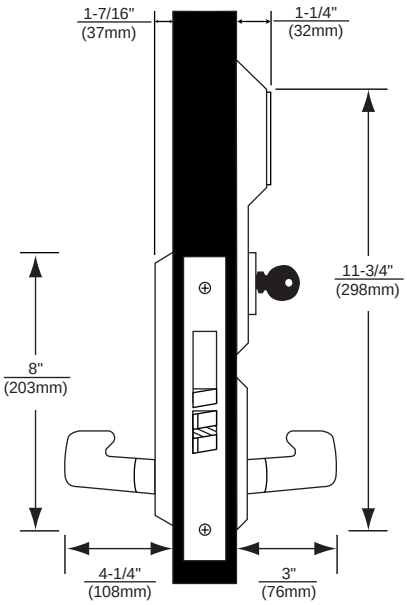

T8790FL Series Lever Handle Trim

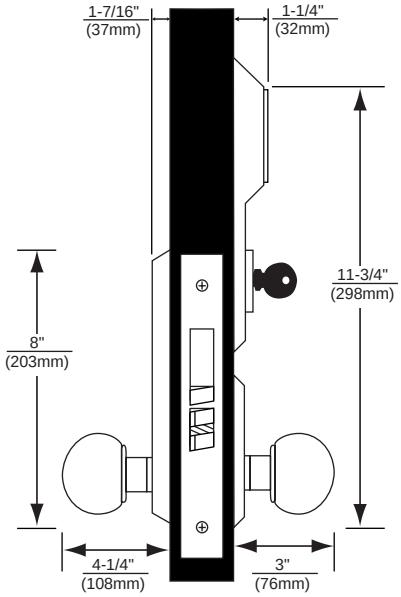

T8790 Series Knob Trim

CYLINDRICAL LOCK SERIES

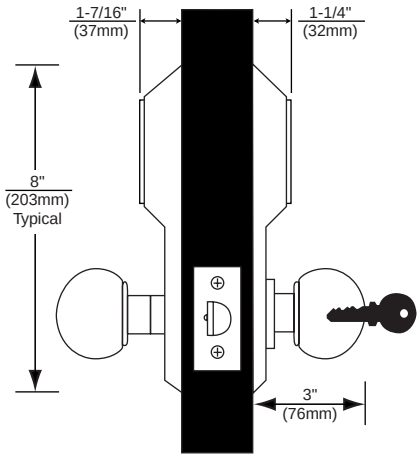

T5490 Series Knob Trim Only

Deadbolt	1" (25mm) throw, stainless steel with hardened steel anti-saw pins
Latchbolt	Two piece 3/4" (19mm) throw, stainless steel, anti-friction
Auxiliary Latch	Stainless steel, for deadlocking the latchbolt
Lever Spindle	3/8" sq. (9.5mm) T8790FL
Knob Spindle	5/16" sq. (8mm) T8790
Backset	2-3/4" (70mm)
Door Thickness	1-3/4" (45mm) minimum
Handing	RH / LH / RHR / LHR, field reversible
Lock Front	8" (203mm) x 1-1/4" (32mm)
Strike	4-7/8" (124mm) x 1-1/4" (32mm) ANSI curved lip strike

Latchbolt	1/2" (13mm) throw, solid brass deadlocking latchbolt
Backset	2-3/4" (70mm)
Door Thickness	Adjustable to accommodate doors 1-3/8" (35mm) to 2" (51mm) thick
Handing	Non-handed
Strikes	• 2-3/4" (70mm) x 1-1/8" (28.5mm) • "T" lip strike standard (#495) • 4-7/8" (124mm) x 1-1/4" (32mm) ANSI strike optional (#497)

SPECIFICATIONS

Escutcheon:	Heavy-gauge wrought brass, bronze or stainless steel
Case:	Heavy wrought steel, zinc dichromated
Escutcheon Dimensions:	8" (203mm) H x 3-3/8" (86mm) W (see above for details)
Weight:	Approximately 7 lbs. (3 Kg)
Power Pack:	Eight "AA" alkaline batteries
Environmental Tolerance:	Temperature: -20° F to 120° F (-29° C to 49° C)

FUNCTIONS

MORTISE LOCK SERIES

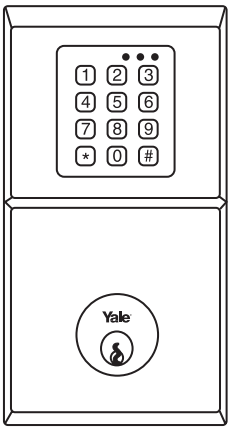

T8797(FL) Entrance Lock With Deadbolt (Lever)
T8797 Entrance Lock With Deadbolt (Knob)
Outside knob or lever always locked; inside knob or lever always active. Entrance by mechanical key or by entering a valid one- to six-digit combination followed by the # key. Outside trim will unlock for three seconds, then relock. Latch and deadbolt can be retracted with mechanical key. Thumbturn or mechanical key can project deadbolt. Inside lever or knob will retract latch and deadbolt simultaneously.

T8791(FL) Office Lock Without Deadbolt (Lever)
T8791 Office Lock Without Deadbolt (Knob)
Outside knob or lever always locked; inside knob or lever always active. Entrance by mechanical key or by entering a valid one- to six-digit combination followed by the # key. Outside trim will unlock for three seconds, then relock.

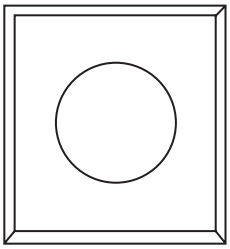

T8777(FL) Office Lock Without Deadbolt (passage)
Outside knob on lever may be locked or unlocked by inside turn button. When unlocked, acts as a passage set. When locked, entry allowed by mechanical key or by entering a valid one- to six-digit combination followed by the # key. Outside trim will unlock for three seconds, then relock. Inside trim always operative.

Cylinders:
Standard No. 2153 - 1-1/2" (38mm)
High Security No. U5153 - 1-1/2" (38mm)
Security No. 5153 - 1-1/2" (38mm)
IC No. 2196 - 1-1/2" (38mm)
Security IC No. 5196 - 1-1/2" (38mm)

CYLINDRICAL LOCK SERIES

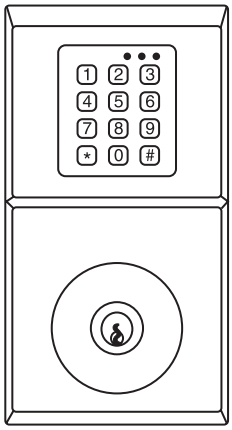

T5491 Entrance Lock
Outside knob always locked; inside knob always active. Entrance by mechanical key or by entering a valid one- to six-digit combination followed by the # key. Outside trim will unlock for three seconds, then relock.

Cylinders:
Standard No. 1801
Security No. 5801
IC (BR and CA Knobs Only) 1210
Security IC (BR and CA Knobs Only) 5210

MORTISE LEVER TRIM

Arcadia - AR

Lever: 4-3/32" (104mm)*
Rose: 2-9/16" (65.1mm)
Projection: 3-1/16" (77.8mm)
Handed: Cannot be field reversed.

Augusta - AU

Lever: 4-1/2" (114.3mm)*
Rose: 2-9/16" (65.1mm)
Projection: 2-5/16" (58.7mm)

Carmel - CR

Lever: 5-1/8" (130.2mm)*
Rose: 2-9/16" (65.1mm)
Projection: 2-7/8" (73mm)

Jefferson - JN

Lever: 4-7/16" (112.7mm)*
Rose: 2-9/16" (65.1mm)
Projection: 2-3/8" (60.3mm)

Monroe - MO

Lever: 4-5/16" (109.6mm)*
Rose: 2-9/16" (65.1mm)
Projection: 2-13/16" (71.4mm)

Pacific Beach - PB

Lever: 4-5/8" (117.5mm)*
Rose: 2-9/16" (65.1mm)
Projection: 2-3/4" (69.8mm)

Pinehurst - PNR

Lever: 5-1/8" (130.2mm)*
Rose: 2-9/16" (65.1mm)
Projection: 2-7/8" (73mm)

Virginia - VI

Lever: 3-27/32" (97.6mm)*
Rose: 2-9/16" (65.1mm)
Projection: 2-3/4" (69.8mm)

*** From center of shaft to end of handle.**

MORTISE & CYLINDRICAL TRIM/HOW TO ORDER

MORTISE LOCK KNOBS

Brandywine - BR

Knob: 2-1/4" (57.2mm)
Rose: 2-9/16" (65.1mm)
Projection: 2-11/16" (68.3mm)

Copenhagen - CO

Knob: 4-1/2" (114.3mm)
Rose: 2-9/16" (65.1mm)
Projection: 3-3/32" (78.6mm)

Litchfield - LF

Knob: 2-1/4" (57.2mm)
Rose: 2-9/16" (65.1mm)
Projection: 2-15/32" (62.7mm)

CYLINDRICAL LOCK KNOBS

Brandywine - BR

Knob: 2-1/4" (57.2mm)
Rose: 2-9/16" (65.1mm)
Projection: 2-15/16" (74.6mm)

Carolina - CA

Knob: 2-1/4" (57.2mm)
Rose: 2-9/16" (65.1mm)
Projection: 2-15/16" (74.6mm)

Litchfield - LF

Knob: 2-1/4" (57.2mm)
Rose: 2-9/16" (65.1mm)
Projection: 2-5/8" (66.7mm)

ORDERING INFORMATION

The box below lists, in proper sequence (A-E), complete and simplified ordering. The item you order may or may not require use of all indicated segments. When ordering, please refer to the alphabetical listing below to be sure that you include all the necessary information that will allow us to properly fill your order.

	A	B	C	D	E
	Designs	**Lock Functions**	**Cylinder Options**	**Hand**	**Finish**
Page Reference	6, 7	5	5	4	2
Mortise Levers	AU, AR, CR, PN JN, MO, PB, VI	T8791FL T8797FL, T8777	2196 5153 U5153 5196	RH RHR LH LHR	605/606 612/613 625/626 629/630
Mortise Knobs	BR, CO LF	T8791 T8797			
Bored Knobs	BR, CA LF	T5491	5801 (all) 1210/5210 (CA, BR) 1220/5220 (BR)	Not Handed	

online literature and templates

For the latest information on Yale Commercial Lock and Hardware products, visit our website at www.yalelocks.com.

Click on the "Literature" button to find:

- Catalogs
- Parts manuals
- Templates
- Specifications
- Installation instructions

Yale® customers can click on the ebusiness symbol on the website to register for an ebusiness account to:

- Check the status of orders
- Check availability of Warehouse and Quick-Ship items
- Track your order and confirm delivery
- Receive email notification of template changes

And More...

www.yalelocks.com

Yale Commercial Locks and Hardware

Address: 1902 Airport Road, Monroe, NC 28110 USA

Tel: 1-800-438-1951 ● *Fax:* 1-800-338-0965 ● www.yalelocks.com

Yale-Corbin Canada Ltd.

Address: 6940 Edwards Boulevard, Mississauga, Ontario, Canada L5T 2W2

Tel: 1-800-461-3007 ● *Fax:* 1-800-461-8989 ● www.yalecorbin.on.ca

ASSA ABLOY NA International

www.aanai.com

Yale®, Yale Security Inc.®, Other product brand names may be trademarks or registered trademarks of their respective owners and are mentioned for reference purposes only. Copyright© 2001, 2003 Yale Security Inc. All rights reserved. These materials are protected under US copyright laws. All contents current at time of publication. Yale Security Inc. reserves the right to change availability of any item in this bulletin, its design, construction, and/or its materials.

The ASSA ABLOY Group is the world's leading manufacturer and supplier of locking solutions, dedicated to satisfying end-user needs for security, safety and convenience.

An ASSA ABLOY Group brand

ASSA ABLOY

42054-MA-5.0-11/03R