Yale®

ARCHITECTURAL GRADE DOOR CLOSER

3000 SERIES

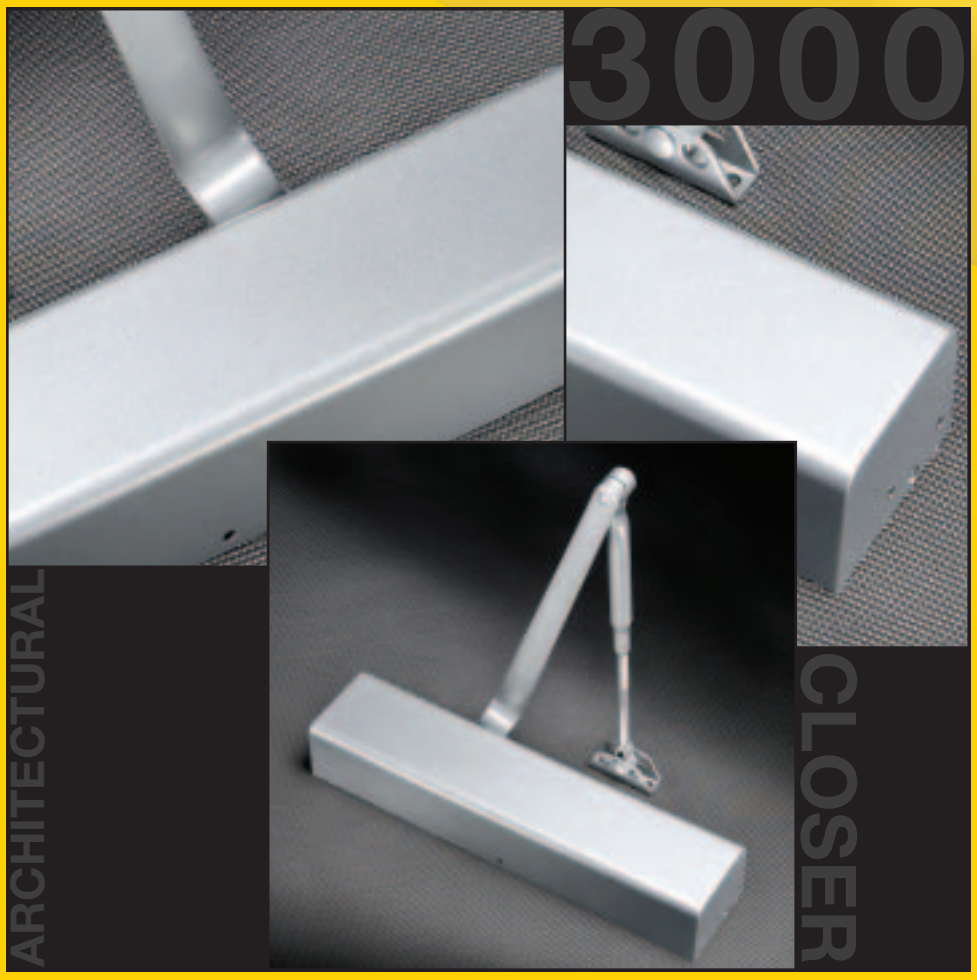

CATALOG

An ASSA ABLOY Group brand

ASSA ABLOY

THE PERFECT CHOICE

Yale's 3000 Series Architectural Door Closers offer the perfect combination of reliability, appearance and durability in today's market. With features such as staked valves, self-drilling/self-tapping screws, rack and pinion design and precise valve adjustment, and a complete range of arm and cover options, the Yale® 3000 can meet virtually any application challenge.

This U.L. listed, ANSI Grade 1 closer has a long history of proven quality. It is the ideal choice for upscale facilities that demand superior performance such as: conference centers, office buildings, courthouses, religious facilities, banks, nursing homes, restaurants, hotels and medical offices.

FINISHES

Product will be painted with a combination of waterborne acrylic and polyester powder coat. Closers will withstand 120 hours of salt spray. (The ANSI requirement is 25 hours.)

Sprayed Finishes

Description	Specify Designation (BHMA)	Complements the following finishes	Old Designation
Aluminum	689	628, 625, 629, 630, 651, 652	SB
Statuary Bronze	690	640, 613, 695	STAT
Dull Bronze	691	612, 637, 639	BL
Black	693	315	315
Medium Amber	694	312	312
Gold	696	605, 606, 632, 633	GB
Prime Coat (Beige)	600		SRI
Corrosion Inhibitor Prime Coat*	SRI		SRI

*** Available at extra cost. Closers can be ordered prime coated only, i.e. (SRI) or prime coated with finish, i.e. SRI x 690.**

CONTENTS

Introduction 2
Overview 3
Features 4-5
Optional Features 6
Applications 7-9
Technical Details 10-21
Accessories 22-33
Parts List 34-44
Suggested Specifications 45
How To Order 46

Plated Finishes*		Cover				Old Designation
		Metal	Plastic	Arch. Metal	Arch. Plastic	
Bright Brass	605E	Yes	Yes	Yes	No	US3
Satin Brass	606E	Yes	No	Yes	No	US4
Bright Bronze	611E	Yes	No	Yes	No	US9
Satin Bronze	612E	Yes	No	Yes	No	US10
Oxidized Oil Rubbed Bronze	613E	Yes	No	Yes	No	US10B
Bright Chrome	625E	Yes	Yes	Yes	No	US26
Satin Chrome	626E	Yes	No	Yes	No	US26D

*** When a plated finish is ordered, arm and cover will be plated unless "cover only" is specified.**
3100/3300 - available with plated arm only.

OVERVIEW

CUTAWAY VIEW OF CLOSER BODY

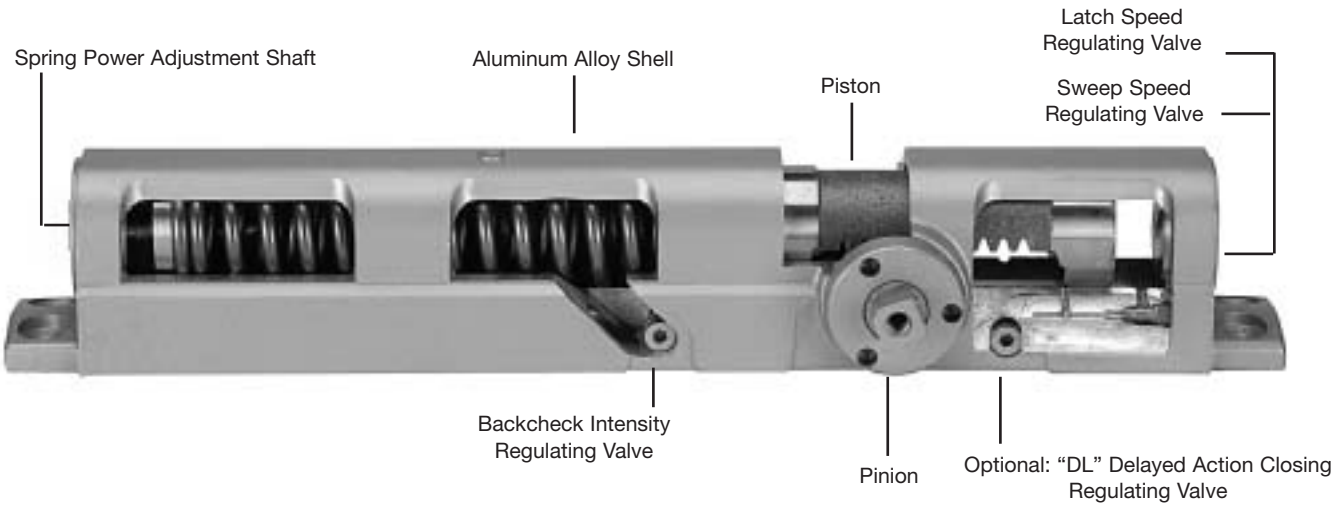

COMPLIANCE STANDARDS

Series 3301 and 3501 door closers are designed to comply with requirements of the Americans with Disabilities Act (A.D.A.) and ANSI standard A117.1. All series 3300/3500, 3301/3501 comply with ANSI A156.4 Grade 1 Specification. All Yale® series 3300/3500, 3301/3501 closers with non-hold open arms are listed by Underwriters Laboratories for labeled fire doors. This includes compliance to UL10C and UBC-72 (1997) for 3-hour assemblies. The product is manufactured in an ISO 9001 facility. These closers are also listed with the New York City Materials and Equipment Acceptance Division.

STANDARD ON ALL 3000 SERIES CLOSERS

- ANSI/BHMA A156.4, Grade 1
- 10-year warranty
- Non-handed
- UL10C
- Staked valves
- Cast aluminum body
- Rack-and-pinion design
- 1-1/4" (32mm) diameter piston
- 5/8" (16mm) diameter pinion journals
- Separate and independent, latch, sweep and backcheck intensity valves
- 2-1/8" (54mm) projection (standard covers)
- All standard arm applications (with slim, full or metal covers) allow doors to swing 180°, conditions permitting

Additional Features	3300	3500	3301	3501
Sized springs 2, 3, 4, 5, 6 with 50% additional adjustment	X	X		
Adjustable spring sizes 1 through 6			X	X
Molded slim line plastic cover standard	X		X	
Molded full plastic cover standard		X		X
Metal and architectural covers optional		X		X
Bi-pack packaging standard (regular arm and top jamb mounting; parallel mounting optional)	X	X		
Tri-pack packaging standard (regular arm, top jamb and parallel arm mounting)			X	X
ADA compliant/ANSI A117.1			X	X
Available with Holder/Stop, Holder/Stop Spring, UNI Stop, PR, ST arm and track options	X	X	X	X
Delayed action option (has pressure relief valve in piston)	X	X	X	X

FEATURES

FASTENERS

All closers with standard non-hold open and hold open arms are shipped with self-drilling/self-tapping and machine screws. Sleeve nuts (SN) may be ordered as an option.

- PR, Holder/Stop, Holder/Stop Spring, UNI Stop arms and slide tracks also have sleeve nuts as part of the standard screw packs.
- Sleeve nuts (SN) are available for all closers and should be used on steel doors to prevent dimpling, or where proper door reinforcement has not been provided.
- Standard sleeve nuts are for 1-3/4" (44mm) doors. 1-3/8" (35mm) or 2-1/4" (57mm) door thicknesses are available and must be specified.
- Through-bolts and grommet nuts (TBGN) are another fastener alternative for wood doors. Specify door thickness 1-3/4" (44mm), 1-3/8" (35mm), or 2-1/4" (57mm) when ordering.
- Lobular Torx® drive screws, for tamper resistance, are available as a special order.

FEATURES

Aluminum Alloy Housing
Closer bodies are constructed of a special aluminum alloy, carefully selected to accommodate interactive steel components and operating conditions.

Rack & Pinion Operation
Provides a smooth constant control of the door through its full opening and closing cycle. 180° door swing can be achieved when door, frame, hardware and arm function do not interfere.

Non-handed
With few exceptions all series 3300/3500 and series 3301/3501 door closers are non-handed and can be installed on either right or left hand swing doors. Pinion shaft extends vertically through the closer body in both directions. This permits the closer to be positioned on either right or left hand doors for most applications. Some options, as noted on page 5, will require that the hand of the closer be specified.

Sweep Speed Control Valve
Allows adjustment of door speed from the door's full open position down to approximately 10° from the closed position.

Latch Speed Control Valve
Allows adjustment of door speed from approximately 10° down to the door's fully closed position.

Closer Fluid
All door closers are supplied with a temperature stable, muti-viscosity fluid. This fluid will permit the door closer to perform within a wide temperature range: from very high to as low as -40°F.

Tri-packed Packaging
3301/3501 come with screws, brackets and soffit plates to allow for regular, top jamb, and parallel arm installations.

Adjustable Backcheck Valve
Provides control of the door in the opening cycle, beginning at approximately 75° of door opening. It cushions the door opening when the door is forcibly opened beyond its pre-adjusted limits.

Standard Molded Covers
Molded of high-impact U.L. listed material. This cover is non-handed for all applications. See page 5 for optional covers.

Warranty
Limited ten-year warranty for defects and life of the building on the aluminum housing.

FEATURES

DOOR CLOSER POWER OPTIONS

Series 3300/3500 Sized Door Closer
Available in five different power sizes (2, 3, 4, 5 or 6). Each power size is adjustable up to 50% stronger than the minimum closing force for that size, as outlined in ANSI standard A156.4.

Series 3301/3501 Multi-sized Door Closer
Adjustable through the power range of sizes 1 through 6, as outlined in ANSI specification A156.4.

The series 3000 also conforms to the minimum opening force requirements of the Americans with Disabilities Act (A.D.A) and ANSI standard A117.1 for interior doors.

OPTIONAL COVERS

Optional Metal Cover
This steel cover is non-handed for regular and parallel arm applications, but is handed for top jamb applications. Cover is available in sprayed or plated finishes.

Optional Architectural Covers *
Plastic
Architectural plastic covers are molded of high-impact U.L. listed material. They are non-handed and available in sprayed finishes.

Metal
The architectural metal covers are steel and non-handed for all applications. These covers are available in sprayed or plated finishes.

*** For Parallel Arm Applications — Consult factory for doors swinging more than 120°**

OPTIONAL FEATURES

DELAYED ACTION

Adjustable Delayed Action Closing
An optional hydraulic feature that adds a third speed range to the closing cycle. This feature becomes effective when the door is opened and released at any point beyond 70°. The amount of time delay depends upon the combination of the angle of door release and valve adjustment. The valve can be adjusted with a 1/8" (3mm) hex key from no delay time up to maximum delay times of:

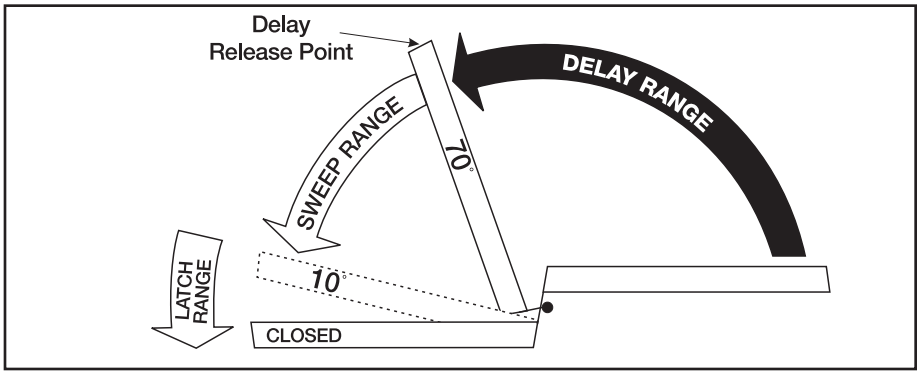

Door Opened and Released at	Approximate Time of Delay Cycle
180°	4-5 minutes
120°	2-3 minutes
90°	25-30 seconds

Pressure Relief Safety Valve
The delayed action hydraulic system contains a pressure relief valve. Any time the door is forced toward the closed direction while it is in the closing cycle, the valve will open and permit the door to close. This prevents damage to door, frame and closer.

Suggested Applications
Delayed Action closing allows slow-moving traffic to clear the opening before the door closer's normal closing cycle begins. This feature can be helpful in health care facilities such as hospitals and nursing homes. It provides sufficient time for persons on crutches or in wheelchairs to pass through a door without concern of it closing. At the same time, it can accommodate the facility's staff with movement of food service carts, beds, and other wheeled traffic.

Use of delayed action closers on many doors throughout industrial and commercial buildings can also assist the flow of traffic. Locations where additional time to clear the opening is advantageous are doors between office and factory/ warehouse facilities, doors to workshops or laboratories, to kitchen and food processing areas... to list just a few.

ARMS

Non-Hold Open
Self-closes door every time door is opened. Auxiliary stop (by others) required except when using the Holder/Stop, Holder/Stop Spring or UNI Stop arms.

Hold Open
Achieved by means of friction or ball and detent/ roller. Friction hold open has a range of 90° to 180° using template location and mechanical adjustment.

Ball and detent or roller hold open is effective in a range of 85° to 110°.

Hold open arm door closers are not permitted to be used on fire door assemblies.

Door Opening Degrees

Arm Function	Regular Arm, Top Jamb, Parallel Arm	Rigid Parallel Arm	Holder/Stop Parallel Arm	Holder/Stop Spring Parallel Arm	UNI Stop Parallel Arm	UNI Stop Top Jamb	Low Profile	Slide Track
NON-HOLD OPEN	✓	✓	85° to 110°	85° to 110°	85° to 110°	85° to 110°	✓	85° to 110°/180°
HOLD OPEN	90° to 180°	85° to 180°	85° to 110°	85° to 110°	85° to 110°	85° to 110°	N/A	85° to 110°

✓=180° trim and template permitting

APPLICATIONS

Non-hold open arm shown. Hold open arm available.

Regular Arm

This is the only pull side application where a double lever arm is used. It is the most power-efficient application for a door closer. Sufficient frame, door and/or ceiling clearance must be considered.

Since the arm assembly projects directly out from the frame, this application may present an aesthetics issue or be prone to vandalism.

Non-hold open arm shown. Hold open arm available.

Top Jamb

For efficiency reasons this application provides the best alternative to the regular arm application. There must be sufficient frame face and/or ceiling clearance for this application. It requires a top rail on the door of just 2-1/4" (57mm). This application provides the best door control for doors in exterior walls that swing out of a building.

The entire door closer and arm assembly project from the frame, similar to the regular arm application, where matters of appearance and malicious abuse can be of concern. Consideration must be given to depth of reveal.

Non-hold open arm shown. Hold open arm available.

Parallel Arm

This application provides the most appealing design appearance for a surface-mounted door closer having a double lever arm. This also makes it beneficial in vandalism-prone areas. It is on the push side of the door and the arm assembly extends almost parallel to the door. In the closed position, there is very little or no hardware projecting beyond the frame face in most situations.

Due to the geometry of the arm it is approximately 25% less power-efficient than a regular arm application. The entire closer and arm assembly are mounted below the frame stop. Top rail clearance dimensions will vary based on the type of cover used. (See page 13.)

APPLICATIONS

Pull Side

Push Side

Slide Track

Whether pull or push side mounted, slide track provides the designer with the smoothest lines available in a surface-mounted door closer. The single lever arm allows components to be located in a stack configuration to minimize projection and eliminate obtrusive arm angles.

The arm geometry reduces door closer power efficiency by approximately 25% from that of a regular arm.

Standard unit:

- Adjustable 85°- 110° (Hold Open and Non-Hold Open)
- Specify if hold open unit is required.
- 180° swing (Non-Hold Open, pull side only) is also available.

Non-Hold Open Arm shown

Rigid Parallel Arm

An enhanced variation of the standard parallel arm assembly that is intended for use in heavy traffic areas where auxiliary door stops are installed. Hold Open available — specify hand when ordering.

Hold Open Arm shown

Holder/Stop Arm

Similar to the Rigid Parallel arm, this arm incorporates a stop at the arm's soffit plate to dead stop the door at a predetermined degree of door swing between 85° and 110°, in 5° increments. Prior to dead stop the door closer's backcheck feature slows the door speed to reduce the impact of the stop action.

The Holder/Stop Arm is intended for use where an auxiliary door stop cannot be utilized and no more than moderate abuse is anticipated. Where more extreme conditions are expected, use of a UNI Stop arm is recommended.

Available with or without hold open. (Hold open strength is adjustable.)

APPLICATIONS

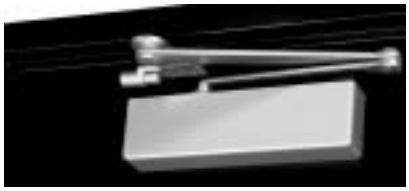

Holder/Stop Spring Arm

This arm incorporates a steel spring (with the standard Holder/Stop arm) that provides greater protection at the end of the door opening cycle.

For extreme conditions, use of a UNI stop arm is recommended. Available with or without hold open.

Parallel

Top Jamb

UNI Stop Arm

Can be used for either parallel arm or top jamb applications. UNI Stop arms combine the features of a double lever arm overhead door stop/holder with the backcheck feature of the door closer to reduce door stopping shock loads to a minimum. This arm uses a compression spring buffer at the soffit plate/arm shoe that will absorb 30 lbf. of force, 5° prior to the door's dead stop. The UNI Stop arm, coupled with the door closer's backcheck feature, proves the most controlled stop available with a surface door closer.

For parallel arm applications there are three different length arm assemblies. Each length is designed for a specific range of door widths, to provide precise door control. This further lessens the dead stop impact on the door's hinges/pivots.

Regular Rigid Heavy Duty Arm

This double lever arm features a non-adjustable secondary arm. Orbitally riveted joints prevent tampering or disassembly. Prefix "R" to model number. Available non-hold open only.

Regular Arm
Allows closer to be installed where there is as little as 1" (25mm) of frame face ceiling clearance

Parallel Arm
Allows closer to be installed 1/2" (13mm) higher up on door than standard parallel arm application.

Low Profile Arm

Supplied with 3380/3580, 3381/3581 series door closers for non-hold open installations only. Low profile arms have a reduced height elbow joint and a straight main arm. This enables the door closer to be installed in less vertical space.

TECHNICAL DETAILS

REGULAR ARM

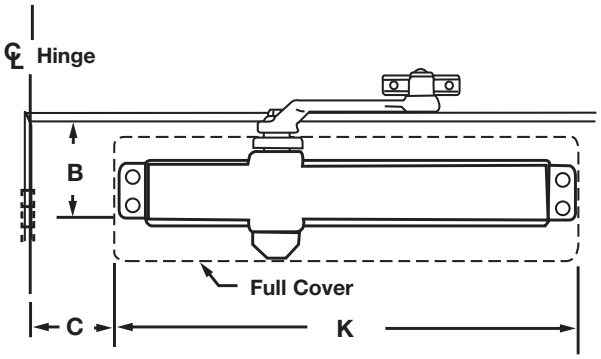

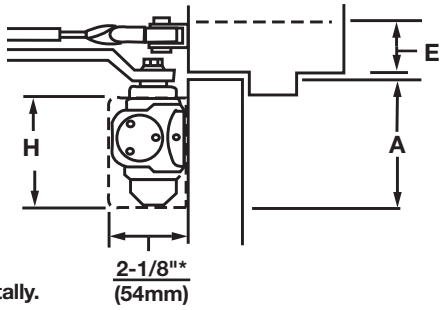

Mounting holes for closer body are spaced 3/4" (19mm) vertically x 12" (305mm) horizontally.
Note: All measurements are Inches/mm.

Closer Series	Covers	E Minimum Ceiling Clearance			B Minimum Top Rail				A Minimum Top Rail Clearance		C Template Position for 100° Door Opening	K Closer Length	H Closer Height
					W/O Drop Plate		W/3146 Drop Plate						
		NHO	Low Profile	HO	NHO/HO	Low Profile	NHO/HO	Low Profile	NHO/HO	Low Profile			
3100	No Cover	1-1/2" (38)	1" (25)	1-5/8" (41)	2-1/2" (64)	2-3/8" (60)	1-5/8" (41)	1-1/2" (38)	3-1/2" (89)	3-3/8" (86)	7-1/8" (181)	12-3/4" (324)	2-7/8" (73)
3300	Slim Line Plastic										7" (178)		
3500	Full Plastic											13" (330)	
3500M	Metal								4-1/4" (108)	4-1/8" (105)	6-3/4" (171)	13-5/8" (346)	3-3/4" (95)
3500A	Arch. Plastic								3-5/8" (92)	3-1/2" (89)	6-1/2" (165)	14" (356)	3-1/8" (79)
3500MA	Arch. Metal								3-1/2" (89)	3-3/8" (86)			3" (76)

Door Widths Inches (cm)		Model Number			
		Sized Closers		Multi-Sized Closers	
Interior	Exterior	Non-Hold Open	Hold Open	Non-Hold Open	Hold Open
30" (76)	N/A	3302, 3502	3312, 3512	3301 3501	3311 3511
36" (91)	30" (76)	3303, 3503	3313, 3513		
48" (122)	36" (91)	3304, 3504	3314, 3514		
N/A	48" (122)	3305, 3505	3315, 3515		
Unusual		3306, 3506	3316, 3516		

Note: 3000 series door closers are set at midpower range from the factory and can be adjusted for door sizes noted above.

*** Projection is for Slim Line, Full or Metal Covers. Projection for Architectural Plastic & Architectural Metal Covers = 2-1/4" (57mm).**

TECHNICAL DETAILS

TOP JAMB ARM

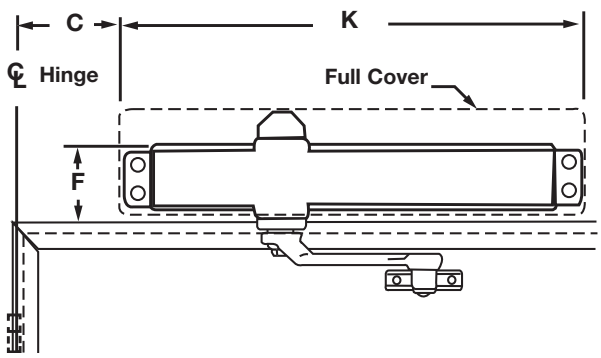

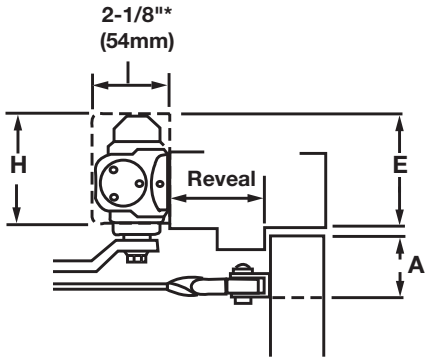

Mounting holes for closer body are spaced 3/4" (19mm) vertically x 12" (305mm) horizontally.
Note: All measurements are Inches/mm.

Closer Series	Covers	F Minimum Frame Face			E Minimum Ceiling Clearance			A Minimum Top Rail Clearance									C Template Position for 100° Door Opening	K Closer Length	H Closer Height
								W/O Drop Plate			W/3146 Drop Plate			With 3148/3547 Drop Plate					
		W/O Drop Plate	With 3146 Drop Plate	With 3148/ 3547 Drop Plate	W/O Drop Plate	With 3146 Drop Plate	With 3148/ 3547 Drop Plate	NHO	Low Profile	HO	NHO	Low Profile	HO	NHO	Low Profile	HO			
3100	No Cover	1-3/4" (44)	1-1/8" (29)	1-1/2" (38)	2-3/4" (70)	1-5/8" (41)	1-1/2" (38)	2-1/4" (57)	N/A	2-1/2" (64)	3-3/8" (86)	2-3/4" (70)	3-5/8" (92)	4-3/8" (111)	3-3/4" (95)	4-5/8" (117)	7-1/8" (181)	12-3/4" (324)	2-7/8" (73)
3300	Slim Line Plastic																7" (178)		
3500	Full Plastic																	13" (330)	
3500M	Metal		N/A	1-5/8" (41)	3-3/4" (95)	N/A	1-5/8" (41)										6-3/4" (171)	13-5/8" (346)	3-3/4" (95)
3500A	Arch. Plastic			1-1/2" (38)	3" (76)		1-1/2" (38)										6-1/2" (165)	14" (356)	3-1/8" (79)
3500MA	Arch. Metal				2-7/8" (73)														3" (76)

Note: Reveal range information is based upon 1-3/4" (44mm) doors hung on 4-1/2" wide hinges.

*** Projection is for Slim Line, Full or Metal Covers. Projection for Architectural Plastic & Architectural Metal Covers = 2-1/4" (57mm).**

TECHNICAL DETAILS

TOP JAMB ARM

Door Widths Inches (cm)		Model Number			
		Sized Closers		Multi-Sized Closers	
Interior	Exterior	Non-Hold Open	Hold Open	Non-Hold Open	Hold Open
30" (76)	N/A	TJ3302, TJ3502	TJ3312, TJ3512	3301 3501	3311 3511
36" (91)	30" (76)	TJ3303, TJ3503	TJ3313, TJ3513		
48" (122)	36" (91)	TJ3304, TJ3504	TJ3314, TJ3514		
N/A	48" (122)	TJ3305, TJ3505	TJ3315, TJ3515		
Unusual		TJ3306, TJ3506	TJ3316, TJ3516		

Note: 3000 series door closers are set at mid power range from the factory and can be adjusted for door sizes noted above.

Reveal Information			
Sized Closers	Reveal Range Inches (mm)	Maximum Door Opening	
		NHO	Hold Open
TJ3000	2-3/4" (70) to 7" (178)	150°	
TJ3010	2-3/4" (70) to 6-3/4" (171)		150°
Multi-Sized Closers			
TJ3301, TJ3501	2-3/4" (70) to 4-1/4" (108)	180°	
TJ3301, TJ3501	4-1/4" (108) to 7" (178)	150°	
TJ3311, TJ3511	2-1/8" (54) to 4-1/4" (108)		180°
TJ3311, TJ3511	4-1/4" (108) to 6-3/4" (171)		150°

Reveal Information (regular arm installed top jamb)			
Sized Closers	Reveal Range Inches (mm)	Maximum Door Opening	
		NHO	Hold Open
3000	0 to 2-7/8" (73)	180°	
3080 w/Drop Plate**	0 to 2-3/4" (70)	180°	
3010	0 to 2-3/4" (70)		180°
Multi-Sized Closers			
3301, 3501	0 to 2-7/8" (73)	180°	
3301, 3501 w/Drop Plate	0 to 2-3/4" (70)	180°	
3311, 3511	0 to 2-3/4" (70)		180°

**** Drop Plate 3146, 3148 or 3547**

Note: Reveal range information is based upon 1-3/4" (44mm) doors hung on 4-1/2" wide hinges.

TECHNICAL DETAILS

PARALLEL ARM

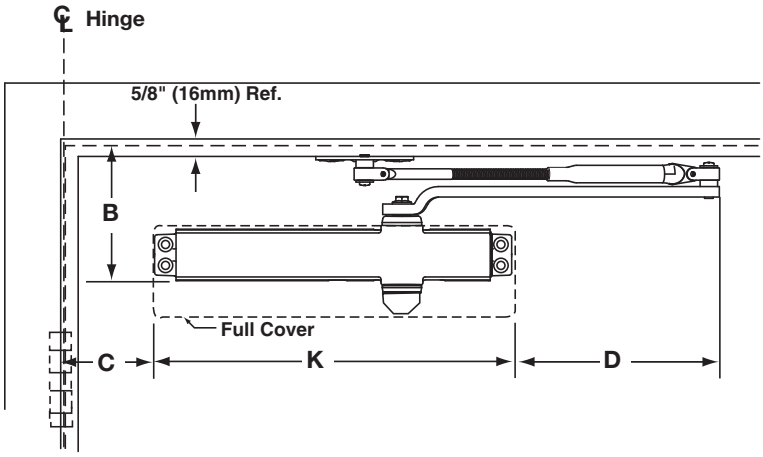

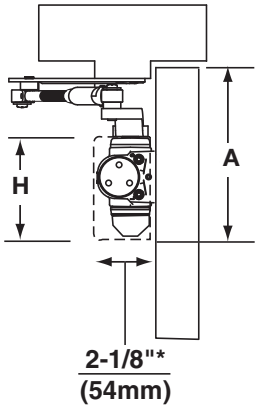

Mounting holes for closer body are spaced 3/4" (19mm) vertically x 12" (305mm) horizontally.
Note: All measurements are Inches/mm.

Closer Series	Covers	B Minimum Top Rail 5/8" (16mm) Frame Stop						A Top Rail Clearance			C Template Position for 120° Door Opening	K Closer Length	H Closer Height	D Arm Extension
		W/O Drop Plate			With 3148/3548 Drop Plate									
		NHO	Low Profile	HO	NHO	Low Profile	HO	NHO	Low Profile	HO				
3100	No Cover	5-1/4" (133)	4-5/8" (117)	5-1/4" (133)	3" (76)	2-3/8" (60)	3" (76)	6-1/4" (159)	5-5/8" (143)	6-1/4" (159)	3-3/8" (86)	12-3/4" (324)	2-7/8" (73)	8-1/8" (206)
3300	Slim Line Plastic										3-1/4" (83)	13" (330)		8" (203)
3500	Full Plastic													
3500M	Metal							6-7/8" (175)	6-1/4" (159)	6-7/8" (175)	3"** (76)	13-5/8" (346)	3-3/4" (95)	7-5/8" (194)
3500A	Arch. Plastic							6" (152)	5-3/8" (137)	6" (152)	2-3/4"** (70)	14" (356)	3-1/8" (79)	
3500MA	Arch. Metal							5-7/8" (149)	5-1/4" (133)	5-7/8" (149)			3" (76)	

****Not available for doors that swing to 180°.**

Door Widths Inches (cm)		Model Number			
		Sized Closers		Multi-Sized Closers	
Interior	Exterior	Non-Hold Open	Hold Open	Non-Hold Open	Hold Open
30" (76)	N/A	PA3302, PA3502	PA3312, PA3512	3301 3501	3311 3511
36" (91)	30" (76)	PA3303, PA3503	PA3313, PA3513		
42" (107)	36" (91)	PA3304, PA3504	PA3314, PA3514		
48" (122)	42" (107)	PA3305, PA3505	PA3315, PA3515		
N/A	48" (122)	PA3306, PA3506	PA3316, PA3516		

Note: 3000 series door closers are set at midpower range from the factory and can be adjusted for door sizes noted above.

*** Projection is for Slim Line, Full or Metal Covers. Projection for Architectural Plastic and Architectural Metal Covers = 2-1/4" (57mm).**

TECHNICAL DETAILS

RIGID PARALLEL ARM

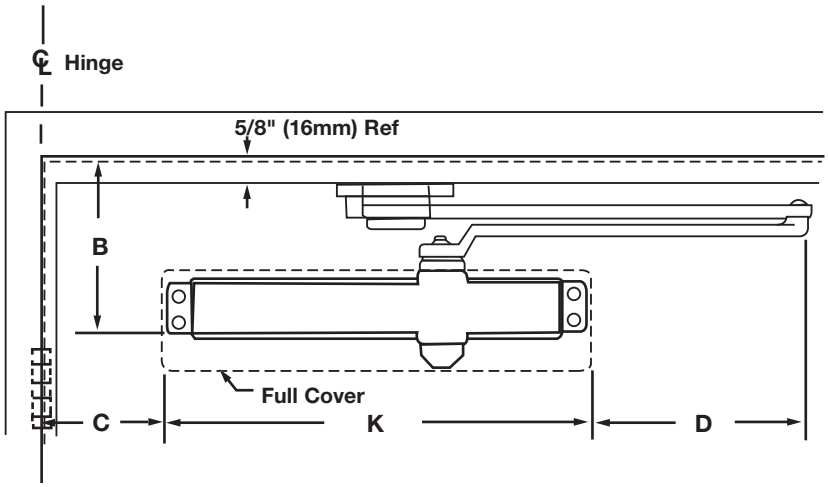

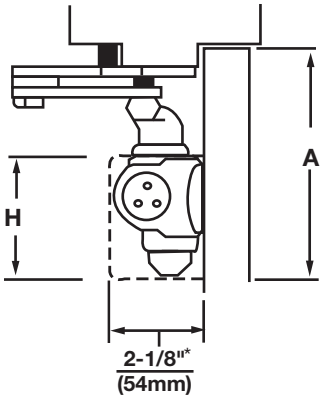

Mounting holes for closer body are spaced 3/4" (19mm) vertically x 12" (305mm) horizontally.
Note: All measurements are Inches/mm.

Closer Series	Covers	B Minimum Top Rail		A Minimum Top Rail Clearance	C Template Position for Hold Open or Stop at Listed Angle Holder-Stop 3020 Series							K Closer Length	H Closer Height	D Arm Extensions
		W/O Drop Plate	With Drop Plate		85°	90°	95°	100°	105°	110°	To 120°			
3100	No Cover	4-5/8" (117)	2-3/8" (60)	5-7/8" (149)	5" (127)	4-1/8" (105)	3-1/2" (89)	2-3/4" (70)	2-1/4" (57)	1-5/8" (41)	3-1/8" (79)	13" (330)	2-7/8" (73)	8" (203)
3300	Slim Line Plastic													
3500	Full Plastic													
3500M	Metal			6-1/2" (165)	4-3/4" (121)	3-7/8" (98)	3-1/4" (83)	2-1/2" (64)	2" (51)	1-3/8" (35)	2-7/8"** (73)	13-5/8" (346)	3-7/8" (98)	7-5/8" (194)
3500A	Arch. Plastic			6" (152)	4-5/8" (117)	3-3/4" (95)	3-1/8" (79)	2-3/8" (60)	1-7/8" (48)	1-1/4" (32)	2-3/4"** (70)	14" (356)	3-1/8" (79)	7-1/2" (191)
3500MA	Arch. Metal			5-7/8" (149)									3" (76)	

**Not available for doors that swing to 180°.

Door Size (Wood or Metal) Inches (cm)		Model Number			
		Sized Closers		Multi-Sized Closers	
Interior	Exterior	Stop Only	Hold Open	Stop Only	Hold Open
28" (71) - 32" (81)	N/A	PR3302, PR3502	PR3312, PR3512	PR3301 PR3501	PR3311 PR3511
33" (84)- 36" (91)	28" (71)- 32" (81)	PR3303, PR3503	PR3313, PR3513		
37" (94)- 41" (104)	33" (84)- 36" (91)	PR3304, PR3504	PR3314, PR3514		
42" (107)- 48" (122)	37" (94)- 41" (104)	PR3305, PR3505	PR3315, PR3515		
N/A	42" (107)- 48" (122)	PR3306, PR3506	PR3316, PR3516		

Note: 3000 series door closers are set at midpower range from the factory and can be adjusted for door sizes noted above.

*** Projection is for Slim Line, Full or Metal Covers. Projection for Architectural Plastic & Architectural Metal Covers = 2-1/4" (57mm).**

TECHNICAL DETAILS

HOLDER/STOP ARM

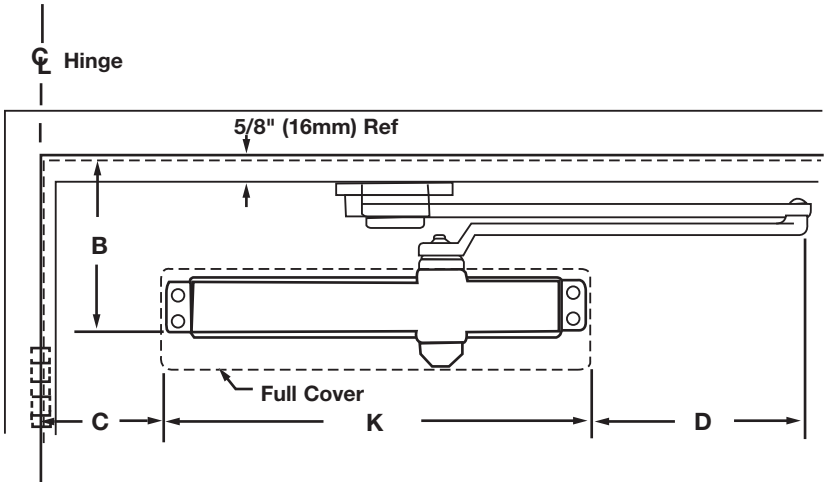

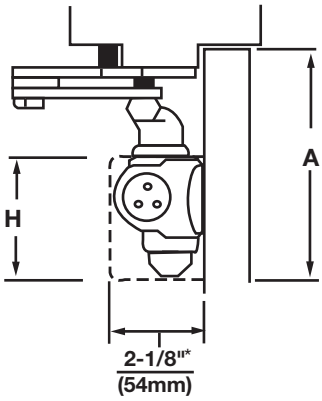

Mounting holes for closer body are spaced 3/4" (19mm) vertically x 12" (305mm) horizontally.
Note: All measurements are Inches/mm.

Closer Series	Covers	B Minimum Top Rail		A Minimum Top Rail Clearance	C Template Position for Hold Open or Stop at Listed Angle						K Closer Length	H Closer Height	D Arm Extensions
		W/O Drop Plate	With Drop Plate		85°	90°	95°	100°	105°	110°			
3100	No Cover	4-5/8" (117)	2-3/8" (60)	5-7/8" (149)	5" (127)	4-1/8" (105)	3-1/2" (89)	2-3/4" (70)	2-1/4" (57)	1-5/8" (41)	13" (330)	2-7/8" (73)	8" (203)
3300	Slim Line Plastic												
3500	Full Plastic												
3500M	Metal			6-1/2" (165)	4-3/4" (121)	3-7/8" (98)	3-1/4" (83)	2-1/2" (64)	2" (51)	1-3/8" (35)	13-5/8" (346)	3-7/8" (98)	7-5/8" (194)
3500A	Arch. Plastic			6" (152)	4-5/8" (117)	3-3/4" (95)	3-1/8" (79)	2-3/8" (60)	1-7/8" (48)	1-1/4" (32)	14" (356)	3-1/8" (79)	7-1/2" (191)
3500MA	Arch. Metal			5-7/8" (149)								3" (76)	

Door Size (Wood or Metal) Inches (cm)		Model Number			
		Sized Closers		Multi-Sized Closers	
Interior	Exterior	Stop Only	Hold Open	Stop Only	Hold Open
28" (71) - 32" (81)	N/A	3322, 3522	3322T, 3522T	3321 3521	3321T 3521T
33" (84)- 36" (91)	28" (71)- 32" (81)	3323, 3523	3323T, 3523T		
37" (94)- 41" (104)	33" (84)- 36" (91)	3324, 3524	3324T, 3524T		
42" (107)- 48" (122)	37" (94)- 41" (104)	3325, 3525	3325T, 3525T		
N/A	42" (107)- 48" (122)	3326, 3526	3326T, 3526T		

NOTE: 3000 series door closers are set at midpower range from the factory and can be adjusted for door sizes noted above.

*** Projection is for Slim Line, Full or Metal Covers. Projection for Architectural Plastic & Architectural Metal Covers = 2-1/4" (57mm).**

TECHNICAL DETAILS

HOLDER/STOP SPRING ARMS

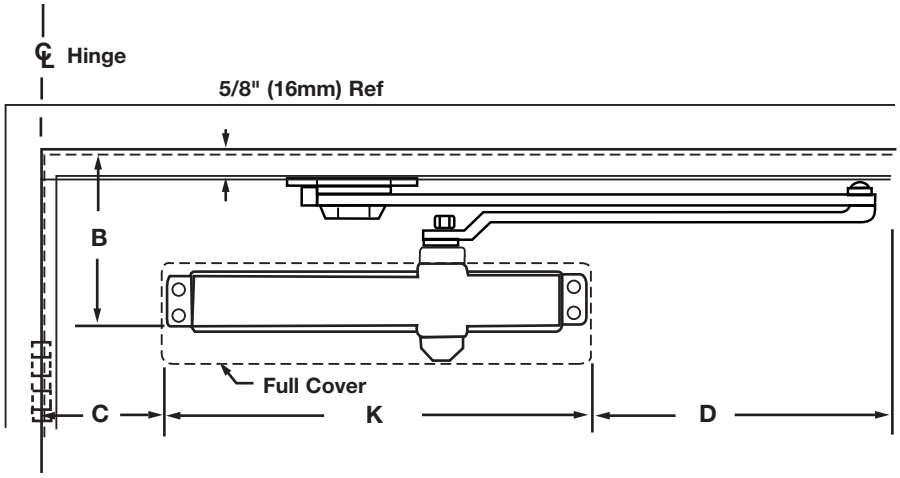

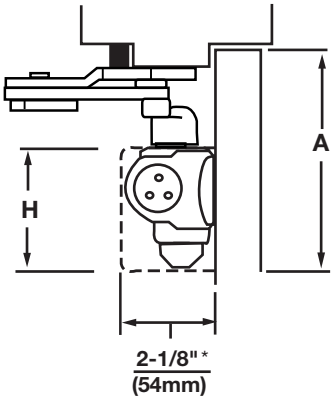

Mounting holes for closer body are spaced 3/4" (19mm) vertically x 12" (305mm) horizontally.
Note: All measurements are Inches/mm.

Closer Series	Covers	B Minimum Top Rail		A Minimum Top Rail Clearance	C Template Position for Hold Open or Stop at Listed Angle						K Closer Length	H Closer Height	D Arm Extensions
		W/O Drop Plate	With Drop Plate		85°	90°	95°	100°	105°	110°			
3100	No Cover	4-5/8" (117)	2-3/8" (60)	5-7/8" (149)	5" (127)	4-1/8" (105)	3-1/2" (89)	2-3/4" (70)	2-1/4" (57)	1-5/8" (41)	13" (330)	2-7/8" (73)	8" (203)
3300	Slim Line Plastic												
3500	Full Plastic												
3500M	Metal			6-1/2" (165)	4-3/4" (121)	3-7/8" (98)	3-1/4" (83)	2-1/2" (64)	2" (51)	1-3/8" (35)	13-5/8" (346)	3-7/8" (98)	7-5/8" (194)
3500A	Arch. Plastic			6" (152)	4-5/8" (117)	3-3/4" (95)	3-1/8" (79)	2-3/8" (60)	1-7/8" (48)	1-1/4" (32)	14" (356)	3-1/8" (79)	7-1/2" (191)
3500MA	Arch. Metal			5-7/8" (149)								3" (76)	

Door Size (Wood or Metal) Inches (cm)		Model Number			
		Sized Closers		Multi-Sized Closers	
Interior	Exterior	Stop Only	Hold Open	Stop Only	Hold Open
28" (71) - 32" (81)	N/A	3332, 3532	3332T, 3532T	3331 3531	3331T 3531T
33" (84)- 36" (91)	28" (71)- 32" (81)	3333, 3533	3333T, 3533T		
37" (94)- 41" (104)	33" (84)- 36" (91)	3334, 3534	3334T, 3534T		
42" (107)- 48" (122)	37" (94)- 41" (104)	3335, 3535	3335T, 3535T		
N/A	42" (107)- 48" (122)	3336, 3536	3336T, 3536T		

Note: 3000 series door closers are set at midpower range from the factory and can be adjusted for door sizes noted above.

*** Projection is for Slim Line, Full or Metal Covers. Projection for Architectural Plastic & Architectural Metal Covers = 2-1/4" (57mm).**

TECHNICAL DETAILS

REGULAR RIGID HEAVY DUTY ARM

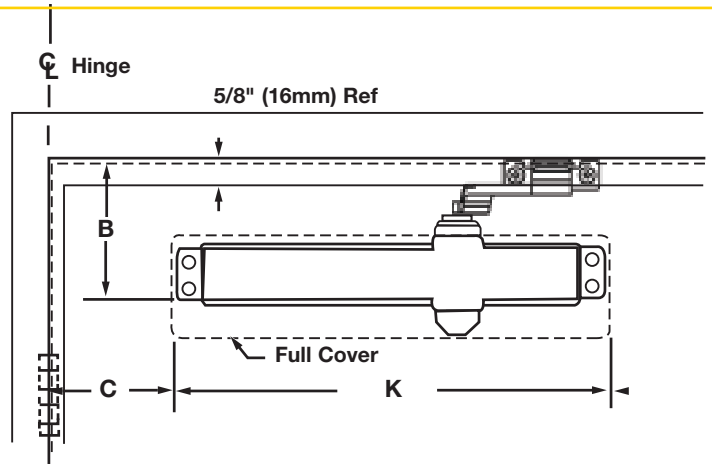

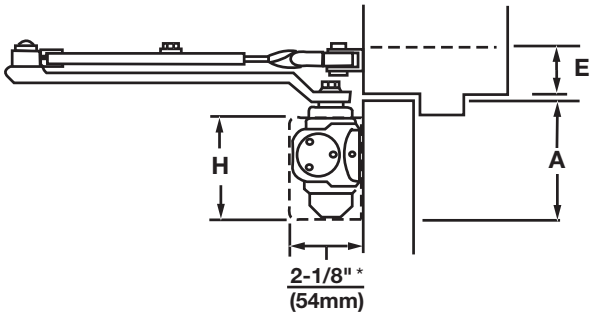

Mounting holes for closer body are spaced 3/4" (19mm) vertically x 12" (305mm) horizontally.
Note: All measurements are Inches/mm.

Door Opening	Dimensions C Inches (mm)
to 100°	6-3/8" (182)
100° to 120°	5-3/8" (137)
121° to 150°	3-3/8" (86)
151° to 180°	3-1/8" (79)

Closer Series	Covers	E Minimum Ceiling Clearance	B Minimum Top Rail		A Minimum Top Rail Clearance	C Template Position for 100 Door opening	K Closer Length	H Closer Length
			W/O Drop Plate	W/3146 Drop Plate				
		NHO	NHO	NHO	NHO			
3100	No Cover	1-3/4" (44)	2-1/2" (64)	1-5/8" (41)	3-1/2" (89)	7-1/8" (181)	12-3/4" (324)	2-7/8" (73)
3300	Slim Line Plastic					7" (178)		
3500	Full Plastic						13" (330)	
3500M	Metal				4-1/4" (108)	6-3/4" (171)	13-5/8" (346)	3-3/4" (95)
3500A	Arch. Plastic				3-5/8" (92)	6-1/2" (165)	14" (356)	3-1/8" (79)
3500MA	Arch. Metal				3-1/2" (89)			3" (76)

Door Size (Wood or Metal) Inches (cm)		Model Number	
		Non-Hold Open Only	
Interior	Exterior	Sized Closers	Multi-Sized Closers
36" (91)	30" (76)	R3302, R3502	R3301 R3501
42" (107)	36" (91)	R3303, R3503	
46" (122)	42" (107)	R3304, R3504	
54" (137)	48" (12)	R3305, R3505	
N/A	52" (132)	R3306, R3506	

Note: 3000 series door closers are set at midpower range from the factory and can be adjusted for door sizes noted above.

TECHNICAL DETAILS

UNI STOP - PARALLEL ARM

Mounting holes for closer body are spaced 3/4" (19mm) vertically x 12" (305mm) horizontally.

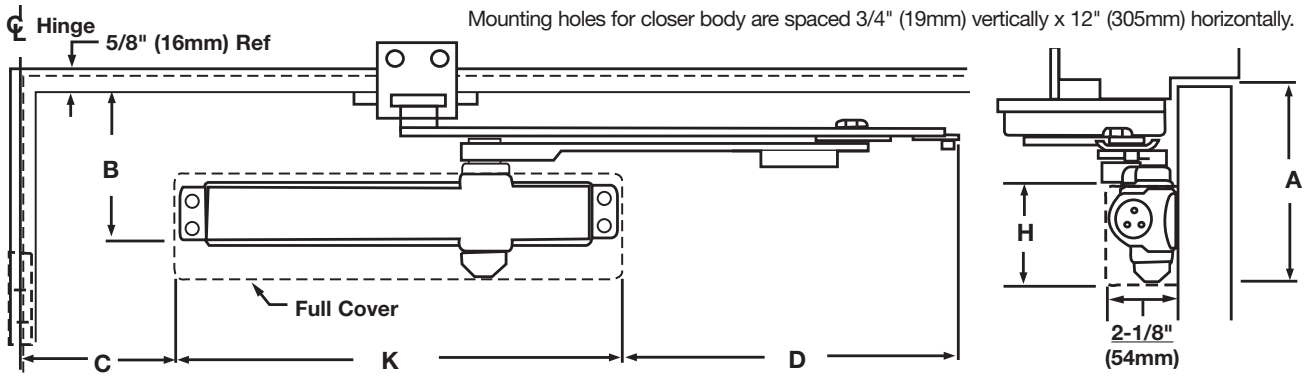

Closer Series	Door Width	Covers	B Minimum Top Rail W/O Drop Plate	B Minimum Top Rail With Drop Plate	A Minimum Top Rail Clearance	C - Template Position for Hold Open or Stop at Listed Angle 85°	90°	95°	100°	105°	110°	K Closer Length	H Closer Height	D Arm Extensions
3300	28-32	Slim Line Plastic	4-3/4" (121)	2-1/2" (64)	5-3/4" (146)	4-5/8" (117)	4" (102)	3-1/2" (89)	3-1/8" (79)	2-3/4" (70)	2-3/8" (60)	13" (330)	2-7/8" (73)	8-3/8" (213)
	33-41					7" (178)	6-1/4" (159)	5-3/4" (146)	5-1/4" (133)	4-3/4" (121)	4-3/8" (111)			9-7/8" (251)
	42-48					9-1/4" (235)	8-3/8" (213)	7-3/4" (197)	7-1/8" (181)	6-5/8" (168)	6-1/4" (159)			11-1/4" (286)
3500	28-32	Full Plastic				4-5/8" (117)	4" (102)	3-1/2" (89)	3-1/8" (79)	2-3/4" (70)	2-3/8" (60)			8-3/8" (213)
3500M		Metal			6-3/8" (162)	4-3/8" (111)	3-3/4" (95)	3-1/4" (83)	2-7/8" (73)	2-1/2" (64)	2-1/8" (54)	13-5/8" (346)	3-7/8" (98)	8" (203)
3500A		Arch. Plastic			5-1/2" (140)	7-5/8" (194)	7" (178)	6-1/2" (165)	6-1/8" (156)	5-3/4" (146)	5-3/8" (137)	14" (356)	3-1/8" (79)	7-7/8" (200)
3500MA		Arch. Metal			5-3/8" (137)								3" (76)	7-1/2" (191)
3500	33-41	Full Plastic			5-3/4" (146)	7" (178)	6-1/4" (159)	5-3/4" (146)	5-1/4" (133)	4-3/4" (121)	4-3/8" (111)	13" (330)	2-7/8" (73)	9-7/8" (251)
3500M		Metal			5-3/4" (146)	6-3/4" (171)	6" (152)	5-1/2" (140)	5" (127)	4-1/2" (114)	4-1/8" (105)	13-5/8" (346)	3-7/8" (98)	9-1/2" (241)
3500A		Arch. Plastic			5-1/2" (140)	10" (254)	9-3/8" (238)	8-3/4" (222)	8-1/4" (210)	7-3/4" (197)	7-3/8" (187)	14" (356)	3-1/8" (79)	9-3/8" (238)
3500MA		Arch. Metal			5-3/8" (137)								3" (76)	9" (229)
3500	42-48	Full Plastic			5-3/4" (146)	9-1/4" (235)	8-3/8" (213)	7-3/4" (197)	7-1/8" (181)	6-5/8" (168)	6-1/4" (159)	13" (330)	2-7/8" (73)	11-1/4" (286)
3500M		Metal			6-3/8" (162)	9" (229)	8-1/8" (206)	7-1/2" (191)	6-7/8" (175)	6-3/8" (162)	6" (152)	13-5/8" (346)	3-7/8" (98)	10-7/8" (276)
3500A		Arch. Plastic			5-1/2" (140)	12-1/4" (311)	11-1/2" (292)	10-7/8" (276)	10-1/4" (260)	9-3/4" (248)	9-1/4 (235)	14" (356)	3-1/8" (79)	10-3/4" (273)
3500MA		Arch. Metal			5-3/8" (137)								3" (76)	10-3/8" (264)

Door Widths (Wood or Metal) Inches (cm)		Model Number				
		Sized Closers		Multi-Sized Doors		
Interior	Exterior	Stop Only	Hold Open	Stop Only	Hold Open	
28" (71) - 32" (81)	N/A	UNI3302, UNI3502	UNI3312, UNI3512	UNI3301 UNI3501	UNI3311 UNI3511	x Specify Door Width
33" (83) - 36" (91)	28" (71) - 32" (81)	UNI3303, UNI3503	UNI3313, UNI3513			
37" (94) - 41" (104)	33" (83) - 36" (91)	UNI3304, UNI3504	UNI3314, UNI3514			
42" (107) - 48" (122)	37" (94) - 41" (104)	UNI3305, UNI3505	UNI3315, UNI3515			
N/A	42" (107) - 48" (122)	UNI3306, UNI3506	UNI3316, UNI3516			

TECHNICAL DETAILS

UNI STOP - TOP JAMB ARM

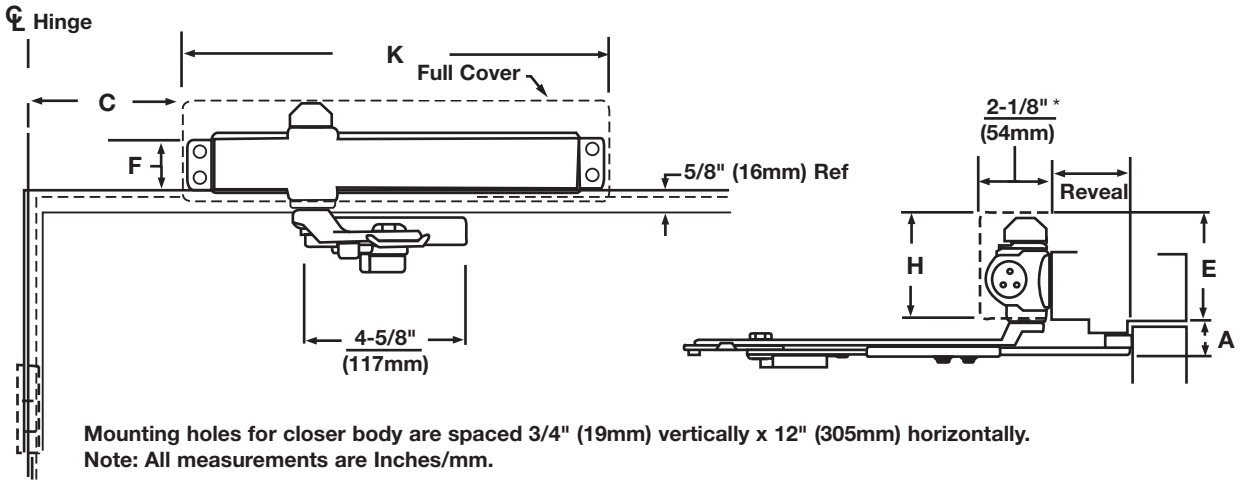

Mounting holes for closer body are spaced 3/4" (19mm) vertically x 12" (305mm) horizontally.
Note: All measurements are Inches/mm.

Closer Series	Covers	F Minimum Frame Face		E Minimum Ceiling Clearance		A Minimum Top Rail Clearance		C Template Position for Hold Open or Stop at Listed Angle						K Closer Length	H Closer Height
		W/O Drop Plate	With 3148/ 3547 Drop Plate	W/O Drop Plate	With Drop Plate	W/O Drop Plate	With 3148/ 3547 Drop Plate	85°	90°	95°	100°	105°	110°		
3300	Slim Line Plastic	1-3/4" (44)	1-1/2" (38)	2-3/4" (70)	1-1/2" (38)	1-7/8" (48)	3-3/4" (95)	9-1/2" (241)	8-7/8" (225)	8-1/4" (210)	7-3/4" (197)	7-3/8" (187)	7" (178)	13" (330)	2-7/8" (73)
3500	Full Plastic														
3500M	Metal		1-5/8" (41)	3-3/4" (95)	1-5/8" (41)			9-1/4" (235)	8-5/8" (219)	8" (203)	7-1/2" (191)	7-1/8" (181)	6-3/4" (171)	13-5/8" (346)	3-7/8" (98)
3500A	Arch. Plastic		1-1/2" (38)	3" (76)	1-1/2" (38)			8-7/8" (225)	8-1/4" (210)	7-5/8" (194)	7-1/8" (181)	6-5/8" (168)	6-1/4" (159)	14" (356)	3-1/8" (79)
3500MA	Arch. Metal			2-7/8" (73)											

Door Widths (Wood or Metal) Inches (cm)		Model Number				
		Sized Closers		Multi-Sized Doors		
Interior	Exterior	Stop Only	Hold Open	Stop Only	Hold Open	
28" (71) - 30" (76)	N/A	UNIJ3302, UNIJ3502	UNIJ3312, UNIJ3512	UNIJ3301 UNIJ3501	UNIJ3311 UNIJ3511	x Specify Frame Reveal
31" (79) - 36" (91)	28" (71) - 30" (76)	UNIJ3303, UNIJ3503	UNIJ3313, UNIJ3513			
37" (94) - 42" (107)	31" (79) - 36" (91)	UNIJ3304, UNIJ3504	UNIJ3314, UNIJ3514			
43" (109) - 48" (122)	37" (94) - 42" (107)	UNIJ3305, UNIJ3505	UNIJ3315, UNIJ3515			
N/A	43" (109) - 48" (122)	UNIJ3306, UNIJ3506	UNIJ3316, UNIJ3516			

Note: 3000 series door closers are set at midpower range from the factory and can be adjusted for door sizes noted above.

*** Projection is for Slim Line, Full or Metal Covers. Projection for Architectural Plastic & Architectural Metal Covers = 2-1/4" (57mm).**

TECHNICAL DETAILS

PULL SIDE SLIDE TRACK

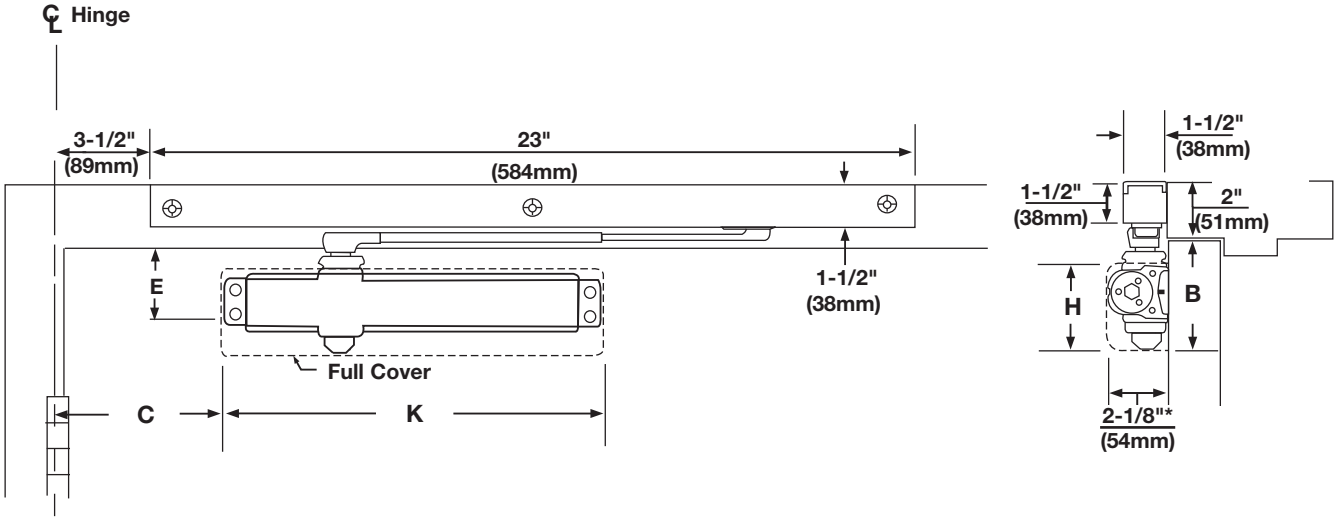

Mounting holes for closer body are spaced 3/4" (19mm) vertically x 12" (305mm) horizontally.
Note: All measurements are Inches/mm.

Closer Series	E Minimum Top Rail		B Minimum Top Rail Clearance				C Template Position				K Closer Length				H Closer Height			
	W/O Drop Plate	With 3146 Drop Plate	Slim or Full Cover	Metal Cover	Arch. Plastic	Arch. Metal	Slim or Full Cover	Metal Cover	Arch. Plastic	Arch. Metal	Slim or Full Cover	Metal Cover	Arch. Plastic	Arch. Metal	Slim or Full Cover	Metal Cover	Arch. Plastic	Arch. Metal
3300ST Series 3500ST Series	2-1/2" (64)	1-5/8" (41)	3-1/2" (89)	4-1/8" (105)	3-5/8" (92)	3-1/2" (89)	5-1/8" (130)	4-7/8" (124)	4-3/8" (111)	4-3/8" (111)	13" (330)	13-5/8" (346)	14" (356)	14" (356)	2-7/8" (73)	3-3/4" (95)	3-1/8" (79)	3" (76)

Maximum Door Width (Wood or Metal) Inches (cm)		Model Number				
		Sized Closers			Multi-Sized Closers	
		Non-Hold Open		Hold Open	Non-Hold Open	Hold Open
Interior	Exterior	85°- 110°	85°- 180°	85°- 110°		
32" (81)	N/A	3304ST, 3504ST	3304ST-180, 3504ST-180	3314ST, 3514ST	3301ST 3501ST	3511ST 3511ST
38" (97)	32" (81)	3305ST, 3305ST	3305ST-180, 3505ST-180	3315ST, 3515ST		
48" (122)	38" (97)	3306ST, 3306ST	3306ST-180, 3506ST-180	3316ST, 3516ST		

Note: 3000 series door closers are set at midpower range from the factory and can be adjusted for door sizes noted above.

*** Projection is for Slim Line, Full or Metal Covers. Projection for Architectural Plastic & Architectural Metal Covers = 2-1/4" (57mm).**

TECHNICAL DETAILS

PUSH SIDE SLIDE TRACK

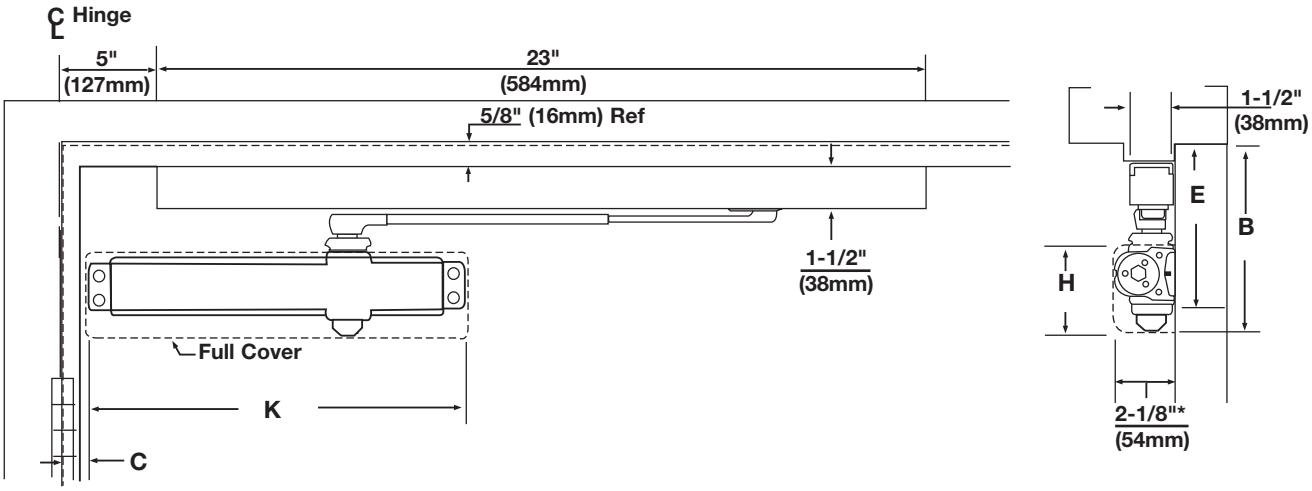

Mounting holes for closer body are spaced 3/4" (19mm) vertically x 12" (305mm) horizontally.
Note: All measurements are Inches/mm.

Closer Series	E Minimum Top Rail		B Minimum Top Rail Clearance				C Template Position				K Closer Length				H Closer Height			
	W/O Drop Plate	With 3148 Drop Plate	Slim or Full Cover	Metal Cover	Arch. Plastic	Arch. Metal	Slim or Full Cover	Metal Cover	Arch. Plastic	Arch. Metal	Slim or Full Cover	Metal Cover	Arch. Plastic	Arch. Metal	Slim or Full Cover	Metal Cover	Arch. Plastic	Arch. Metal
P3300ST Series	5" (127)	2-3/4" (70)	6" (152)	6-5/8" (168)	6-1/8" (156)	6" (152)	7/8" (22)	5/8" (16)	1/8" (3)	1/8" (3)	13" (330)	13-5/8" (346)	14" (356)	14" (356)	2-7/8" (73)	3-3/4" (95)	3-1/8" (79)	3" (76)
P3500ST Series																		

Maximum Door Width (Wood or Metal) Inches (cm)		Model Number			
		Sized Closers		Multi-Sized Closers	
		Non-Hold Open	Hold Open	Non-Hold Open	Hold Open
Interior	Exterior	85°-100°	85°-100°	85°-100°	85°-100°
32" (81)	N/A	P3304ST, P3504ST	P3314ST, P3514ST	P3301ST P3501ST	P3311ST P3511ST
38" (97)	32" (81)	P3305ST, P3505ST	P3315ST, P3515ST		
48" (122)	38" (97)	P3306ST, P3506ST	P3316ST, P3516ST		

Note: 3000 series door closers are set at midpower range from the factory and can be adjusted for door sizes noted above.

*** Projection is for Slim Line, Full or Metal Covers. Projection for Architectural Plastic & Architectural Metal Covers = 2-1/4" (57mm).**

ACCESSORIES

REGULAR ARM

CLOSER MOUNTING PLATES SLIM LINE OR FULL COVER INSTALLATIONS

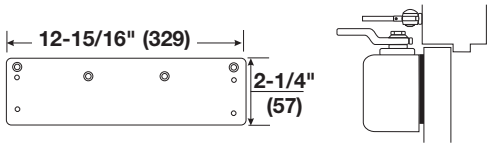

Narrow Top Rail - #3146 Drop Plate: For use where the narrow top rail of the door prevents the closer from being mounted directly on to the door surface. This drop plate must be used for any Series 3000 closer mounted on a top rail between 1-9/16" and 2-7/16" (40mm and 62mm) in height, or any Series 3080 closer mounted on a top rail between 1-7/16" and 2-5/16" (36mm and 59mm) in height.

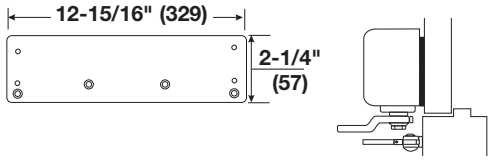

Concealed Door Holder - #3146 Drop Plate: For use where a concealed door holder prevents normal mounting of the closer to the door. This is the same plate used for narrow rail mounting, but is inverted for this application to permit the mounting screws to clear the bottom of the door-holder preparation in the top rail of the door. This places the centerline of the plate's upper mounting screws at 2-3/16" (56mm) from the top of the door.

FULL COVER INSTALLATIONS

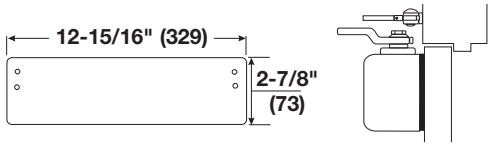

Exposed Back - #3445 Molded Full Cover Decorative Back Plate: For use on doors with glass lights where a closer with a molded full cover is installed and the closer back is exposed. This plate covers the back of the installation to give a pleasing appearance from the reverse side.

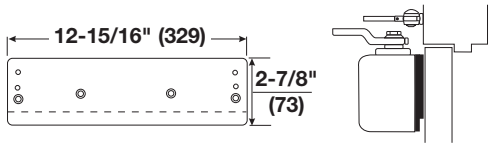

Exposed Back/Narrow Top Rail -
Exposed Back Concealed Door Holder -
#3446 Molded Full Cover Drop Plate Kit: For use with molded full cover installation when a 3146 Plate is needed as a drop plate on a narrow top rail, or as a clearance plate for a concealed door holder, and the closer back is exposed. Kit contains a 3146 Drop Plate and a 3445 Decorative Plate.

METAL COVER INSTALLATIONS

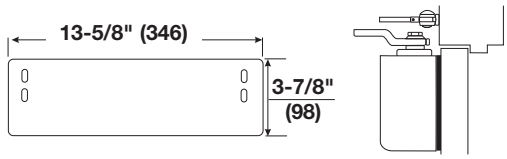

Exposed Back - #3545 Metal Cover Decorative Back Plate: For use on doors with glass lights where a closer with a metal full cover is installed and the closer back is exposed. This plate covers the back of the installation to give a pleasing appearance from the reverse side.

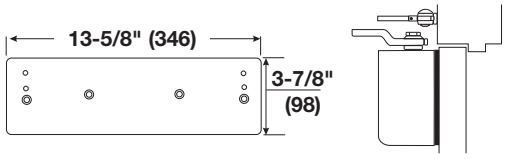

Concealed Door Closer - #3546 Metal Cover Drop Plate: For use where a concealed door holder prevents the normal mounting of the closer to the door. This plate permits the mounting screws to clear the bottom of the door-holder preparation in the top rail of the door. This places the centerline of the plate's upper mounting screws at 2-3/16" (56mm) from the top of the door.

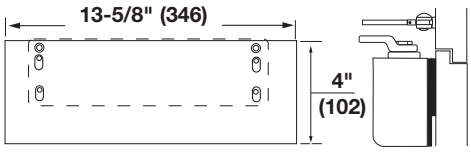

Exposed Back/Narrow Top Rail - #3549 Metal Cover Drop Plate Kit: For use with metal full cover installations, when an 3146 Plate is needed as a drop plate on a narrow top rail and the closer back is exposed. Kit contains a 3146 Drop Plate and a 3545 Decorative Plate.

Note: All measurements are Inches/mm.

ACCESSORIES

REGULAR ARM

CLOSER MOUNTING PLATES ARCHITECTURAL PLASTIC OR METAL COVER INSTALLATIONS

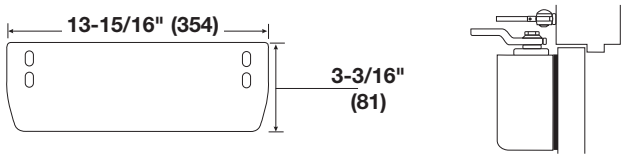

Exposed Back - #3545A Architectural Plastic or Architectural Metal Cover Decorative Back Plate: For use on doors with glass lights where a closer with an architectural plastic or metal cover is installed and the closer back is exposed. This plate covers the back of the installation to give a pleasing appearance from the reverse side.

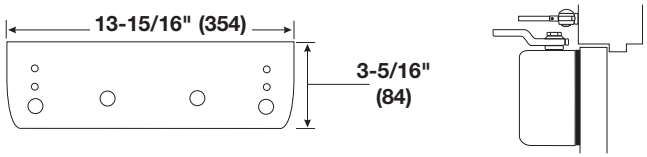

Concealed Door Holder - #3546A Architectural Plastic or Architectural Metal Cover Drop Plate: For use where a concealed door holder prevents the normal mounting of the closer to the door. This plate permits the mounting screws to clear the bottom of door-holder preparation in the top rail of the door. This places the centerline of the plate's upper mounting screws at 2-3/16" (56mm) from the top of the door.

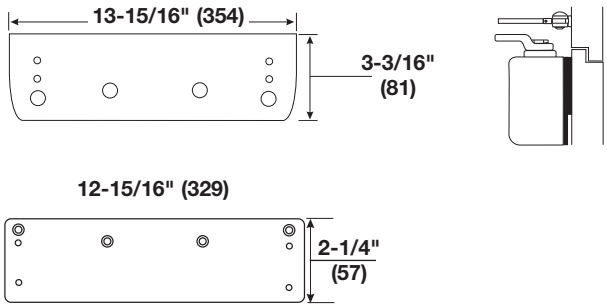

Exposed Back/Narrow Top Rail - #3549A Architectural Plastic or Architectural Metal Cover Drop Plate Kit: For use with architectural plastic or metal cover installations when a 3146 plate is needed as a drop plate on a narrow top rail and the closer back is exposed. Kit contains a 3146 Drop Plate and a 3545A Decorative Plate.

ACCESSORIES

REGULAR ARM

BRACKETS FOR NON-HOLD OPEN ARMS

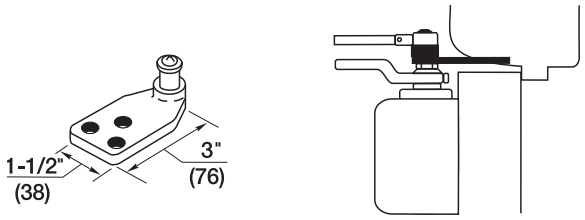

Molded / Bull Nose Trim - #291 Bracket: For use where the door frame has molded or bull nose trim which will not accept a standard non-hold open shoe. The bracket is mortised into the frame rabbet, and projects beyond the face of the frame. It will accommodate a frame rabbet up to 2" (51mm) deep.

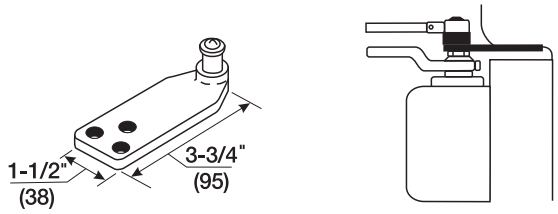

Molded / Bull Nose Trim - #291A Bracket: This bracket is similar to, but longer than, the 291 bracket. It is designed to accommodate frame rabbets from 2" to 2-7/8" (51mm to 73mm) deep.

BRACKETS FOR HOLD OPEN ARMS

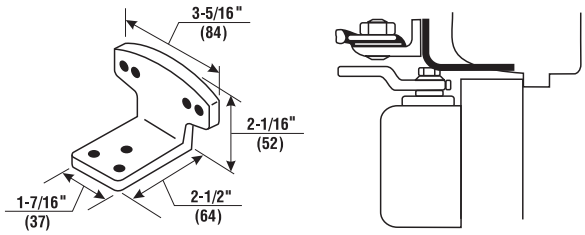

Molded / Bull Nose Trim - #292 Bracket: For use where the door frame has molded or bull nose trim which will not accept a standard hold open shoe. It is mortised into the frame rabbet, and projects beyond the face of the frame. It will accommodate a rabbet up to 2" (51mm) deep. This bracket is used in combination with the standard hold open mounting shoe.

Note: All measurements are Inches/mm.

ACCESSORIES

TOP JAMB ARM

CLOSER MOUNTING PLATES SLIM LINE OR FULL COVER INSTALLATIONS

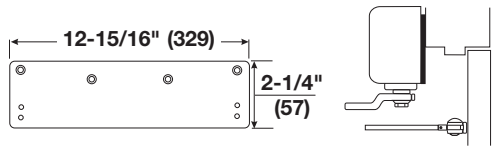

Low Ceiling Clearance - #3146 Drop Plate: For use where low ceiling clearance prevents normal top jamb mounting. This plate is used when clearance is from 1-7/8" to 2-7/8" (48mm to 73mm). Where ceiling clearance is less than 1-7/8" (48mm) see #3148 Drop Plate below.

Overhead Door Holder - #3146 Drop Plate: For use where a surface or concealed overhead door holder prevents normal top jamb mounting. This plate drops the closer and allows arm mounting screws to clear the bottom of the door holder. This places the centerline of the arm mounting screws at 2-7/8" (73mm) from the top of the door.

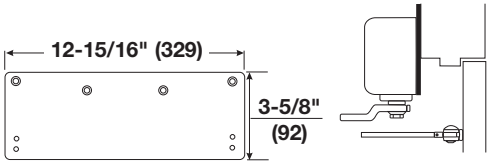

Low Ceiling Clearance - #3148 Drop Plate: For use where the ceiling clearance is between 1-1/2" and 1-3/4" (38mm and 44mm).

METAL COVER INSTALLATIONS

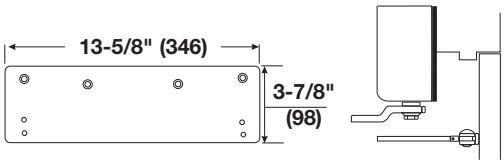

Low Ceiling Clearance -
Overhead Door Holder -
#3547 Metal Full Cover Drop Plate: For use where a low ceiling clearance prevents normal top jamb mounting. This plate is used when the clearance is between 1-5/8" and 3-7/8" (41mm and 98mm). Or for use where a surface or concealed overhead door holder prevents normal top jamb mounting of a closer with a metal full cover. This plate drops the closer and allows arm mounting screws to clear the bottom of the door holder. This places the centerline of the arm mounting screws at 3-7/8" (98mm) from the top of the door.

ARCHITECTURAL PLASTIC OR METAL COVER INSTALLATIONS

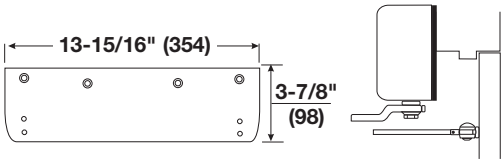

Low Ceiling Clearance -
Overhead Door Holder -
#3547A Architectural Plastic or Architectural Metal Cover Drop Plate: For use where low ceiling clearance prevents normal top jamb mounting. This plate is used when the clearance is between 1-5/8" and 3-7/8" (41mm and 98mm). Also for use where a surface or concealed overhead door holder prevents normal top jamb mounting of a closer with an architectural plastic or metal full cover. This plate drops the closer and allows arm mounting screws to clear the bottom of the door holder. This places the centerline of the arm mounting screws at 3-7/8" (98mm) from the top of the door.

Note: All measurements are Inches/mm.

ACCESSORIES

PARALLEL ARM

CLOSER MOUNTING PLATES SLIM LINE OR FULL COVER INSTALLATIONS

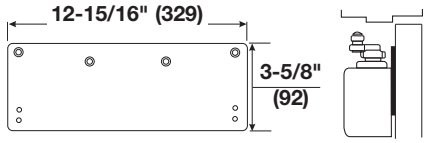

Narrow Top Rail - #3148 Drop Plate: For use where a narrow top rail prevents the closer from being mounted directly to the door surface. This drop plate can be used to mount a closer on a top rail as narrow as 2-7/8" (73mm) in height.

FULL COVER INSTALLATIONS

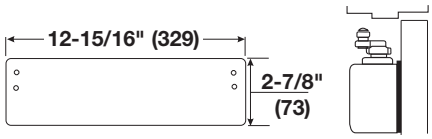

Exposed Back - #3445 Molded Full Cover Decorative Back Plate: For use on doors with glass lights where a closer with molded full cover is installed and the closer back is exposed. This plate covers the back of the installation to give a pleasing appearance from the reverse side.

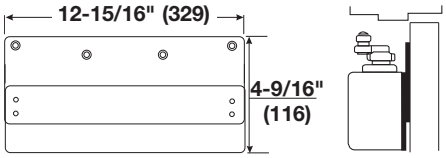

Exposed Back/Narrow Top Rail - #3448 Molded Full Cover Drop Plate Kit: For use on doors with glass lights where a closer with molded full cover is installed and the back of the closer is exposed. Kit consists of a 3148 Drop Plate and a 3445 Decorative Back Plate. This covers the back of the installation and gives a pleasing appearance from the reverse side.

METAL COVER INSTALLATIONS

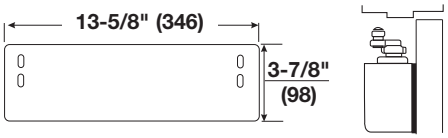

Exposed Back - #3545 Metal Full Cover Decorative Back Plate: For use on doors with glass lights where a closer with full metal cover is installed and the back of the closer is exposed. This plate covers the back of the installation and gives a pleasing appearance from the reverse side.

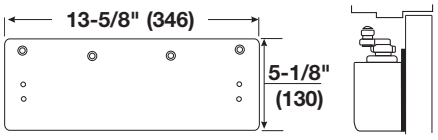

Exposed Back/Narrow Top Rail - #3548 Metal Full Cover Drop Plate: For use on doors with glass lights where a closer with metal full cover is installed on a narrow top rail, and the back of the cover is exposed. This drop plate can be used to mount a closer on a top rail as narrow as 2-7/8" (73mm) in height. This plate covers the back of the installation and gives a pleasing appearance from the reverse side.

ARCHITECTURAL PLASTIC OR METAL COVER INSTALLATIONS

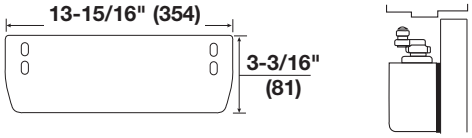

Exposed Back - #3545A Architectural Plastic or Architectural Metal Cover Decorative Back Plate: For use on doors with glass lights where a closer with an architectural plastic or metal cover is installed and the closer back is exposed. This plate covers the back of the installation to give a pleasing appearance from the reverse side.

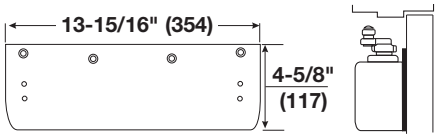

Exposed Back/Narrow Top Rail - #3548A Architectural Plastic or Architectural Metal Cover Drop Plate: For use on doors with glass lights where a closer with an architectural plastic or metal cover is installed on a narrow top rail, and the back of the cover is exposed. This drop plate can be used to mount a closer on a top rail as narrow as 2-7/8" (73mm) in height. This plate covers the back of the installation to give a pleasing appearance from the reverse side.

Note: All measurements are Inches/mm.

ACCESSORIES

PARALLEL ARM - BRACKETS FOR NON-HOLD OPEN ARMS

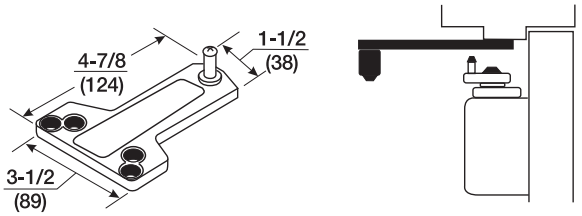

Standard Installation - #289A Soffit Plate: This soffit plate is supplied standard with parallel arm closers. It can be mounted where the frame soffit is as narrow as 1" (25 mm).

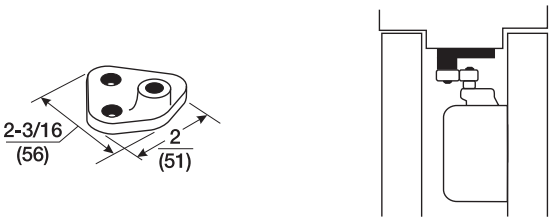

Mounting between Doors - #413A Soffit Bracket: For use where insufficient space between companion doors does not permit use of other soffit plates. This bracket permits mounting of the closer between doors with as little as 3" (76mm) of header space. Permits closer arm to clear up to 5/8" (16mm) high stop.

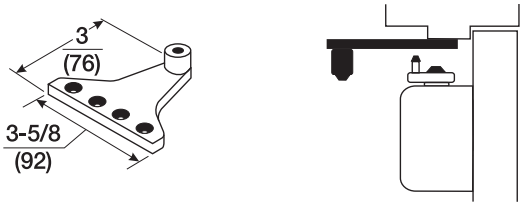

Narrow Frame/Removable Stop - #297 Soffit Plate: For use where a narrow frame or frame with removable stop does not permit use of the standard soffit plate. This soffit plate may be mounted on the frame soffit or the frame rabbet where the stop does not exceed 5/8" (16mm) in height. All of the screw holes are in a straight line, requiring as little as 1-1/4" (32mm) of frame reveal to mount bracket and maintain good closer arm geometry. Where the frame soffit is as wide as 2" (51mm), this soffit plate may be used to clear weather-stripping that is up to 1-3/8" (35mm) wide and 5/8" (16mm) in height.

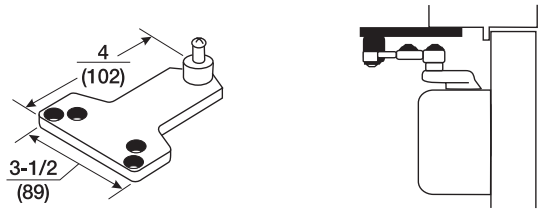

Blade/Applied Stop - #299 Soffit Plate: For use where a blade or applied stop does not permit installation of the standard soffit plate. Mounts to either the frame soffit or rabbet. Since this soffit plate projects 7/8" (22mm) less than a standard soffit plate, it requires a minimum frame reveal of 1-1/2" (38mm). Permits closer to clear up to a 5/8" (16mm) stop.

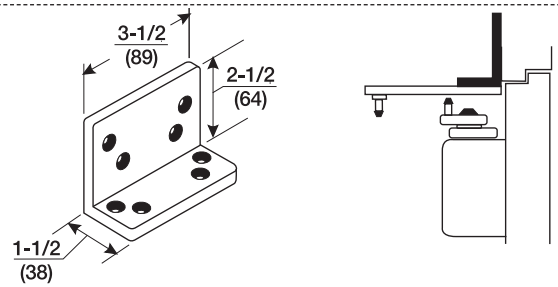

Flush Transom - #589L Angle Bracket: For use where rabbeted or flush transom conditions prevent installation of a soffit plate. Used in combination with the 289 soffit plate, or may be used in combination with the 290 soffit plate when it is necessary for the closer arm to clear a separate overhead door holder.

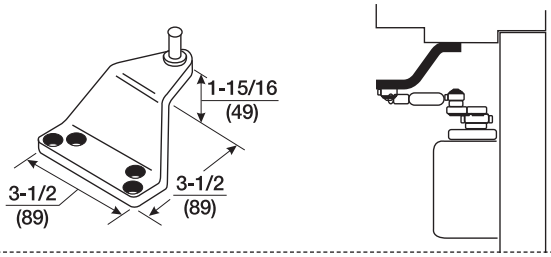

Extra-clearance - #290 Offset Soffit Plate: For use where the need for additional clearance prevents use of the standard soffit plate. This plate mounts to the frame soffit to provide up to 2" (51mm) of clearance when a separate overhead door holder is used. Standard mounting requires a 2-5/8" (67mm) wide frame soffit. It may also be used where unusually high frame stops or weather-stripping prevent the use of other soffit plates.

Note: All measurements are Inches/mm.

ACCESSORIES

PARALLEL ARM - BRACKETS FOR HOLD OPEN ARMS

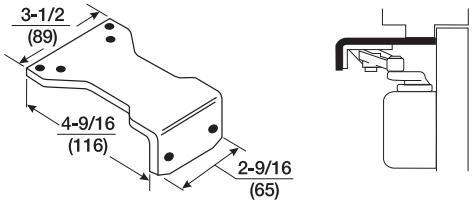

Parallel Hold Open - #588 Adapter Plate: Supplied standard with all parallel arm hold open closers. It can also be used to convert regular arm or top jamb hold open arms to parallel arm installation. It can be mounted where the frame soffit is as narrow as 1" (25mm).

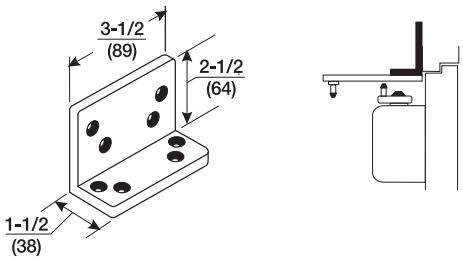

Flush Transom - #589L Angle Bracket: For use where rabbeted or flush transom conditions prevent installation of a soffit plate. Used in combination with the 588 adapter plate, this bracket fastens to the overhead transom to provide a mounting surface for the soffit plate assembly.

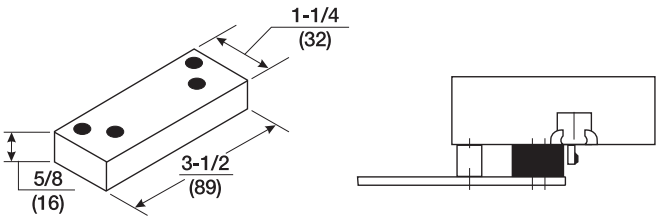

Clearance/Support Blade Stop - #891 Spacer Block: For use where the door frame has a blade stop and the soffit plate must be mounted on the frame rabbet. This accessory is used in combination with the standard spacer block to provide clearance of the blade stop. Also used with non-hold open arms.

Note: All measurements are Inches/mm.

ACCESSORIES

RIGID PARALLEL, HOLDER/STOP, HOLDER/STOP SPRING ARMS

CLOSER MOUNTING PLATES SLIM LINE OR FULL COVER INSTALLATIONS

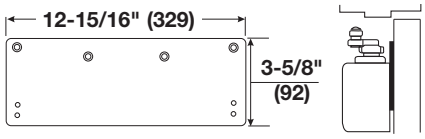

Narrow Top Rail - #3148 Drop Plate: For use where a narrow top rail prevents the closer from being mounted directly to the door surface. This drop plate can be used to mount a closer on a top rail as narrow as 2-9/16" (65mm) in height.

FULL COVER INSTALLATIONS

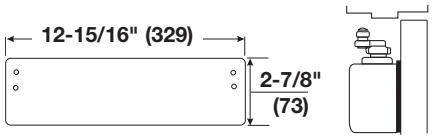

Exposed Back - #3445 Molded Full Cover Decorative Back Plate: For use on doors with glass lights where a closer with molded full cover is installed and the closer back is exposed. This plate covers the back of the installation to give a pleasing appearance from the reverse side.

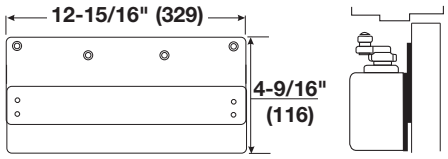

Exposed Back/Narrow Top Rail - #3448 Molded Full Cover Drop Plate Kit: For use on doors with glass lights where a closer with molded full cover is installed and the back of the closer is exposed. Kit consists of a 3148 Drop Plate and a 3445 Decorative Back Plate. This covers the back of the installation and gives a pleasing appearance from the reverse side.

METAL COVER INSTALLATIONS

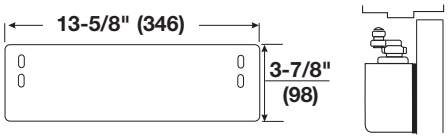

Exposed Back - #3545 Metal Full Cover Decorative Back Plate: For use on doors with glass lights where a closer with full metal cover is installed and the back of the closer is exposed. This plate covers the back of the installation and gives a pleasing appearance from the reverse side.

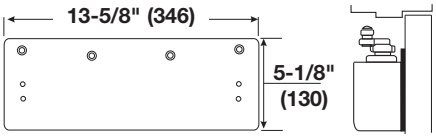

Exposed Back/Narrow Top Rail - #3548 Metal Full Cover Drop Plate: For use on doors with glass lights where a closer with metal full cover is installed on a narrow top rail, and the back of the cover is exposed. This drop plate can be used to mount a closer on a top rail as narrow as 2-9/16" (65mm) in height. This plate covers the back of the installation and gives a pleasing appearance from the reverse side.

ARCHITECTURAL PLASTIC OR METAL COVER INSTALLATIONS

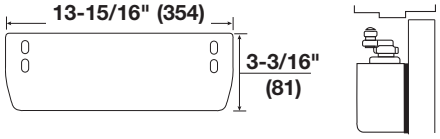

Exposed Back - #3545A Architectural Plastic or Architectural Metal Cover Decorative Back Plate: For use on doors with glass lights where a closer with an architectural plastic or metal cover is installed and the closer back is exposed. This plate covers the back of the installation to give a pleasing appearance from the reverse side.

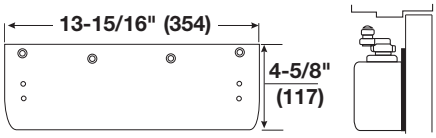

Exposed Back/Narrow Top Rail - #3548A Architectural Plastic or Architectural Plastic or Architectural Metal Cover Drop Plate: For use on doors with glass lights where a closer with an architectural plastic or metal cover is installed on a narrow top rail, and the back of the cover is exposed. This drop plate can be used to mount a closer on a top rail as narrow as 2-9/16" (65mm) in height. This plate covers the back of the installation to give a pleasing appearance from the reverse side.

Note: All measurements are Inches/mm.

ACCESSORIES

RIGID PARALLEL, HOLDER/STOP, HOLDER/STOP SPRING ARMS

BRACKETS FOR NON-HOLD OPEN ARMS & HOLD OPEN ARMS

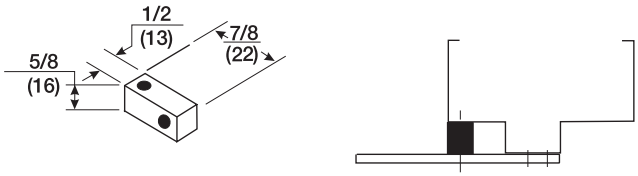

Standard - #293S Spacer Block: For use where a narrow frame soffit does not provide adequate support for the soffit plate. Supplied as standard with all parallel rigid arm closers.

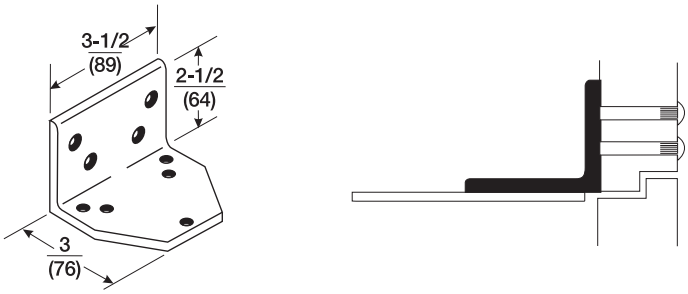

Flush Rabbeted Transom - #293L Angle Bracket: For use where flush transom conditions prevent mounting of the standard soffit plate. This bracket is used in combination with the standard soffit plate.

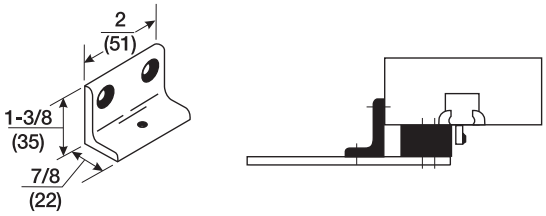

Narrow Frame - #890 Support Bracket: For use where the frame is narrow and the soffit plate cannot be mounted directly to the frame soffit or rabbet. Used in combination with the #891 Spacer Block on blade stop frames to provide extra support and needed clearance of the blade stop.

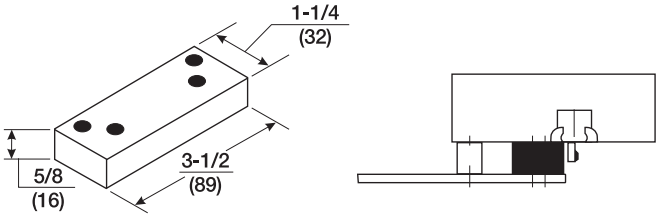

Clearance/Support Blade Stop - #891 Spacer Block: For use where the door frame has a blade stop and the soffit plate must be mounted on the frame rabbet. This accessory is used in combination with the standard spacer block to provide clearance of the blade stop.

Note: All measurements are Inches/mm.

ACCESSORIES

UNI STOP ARM

CLOSER MOUNTING PLATES PARALLEL ARM

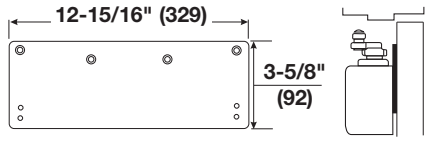

Narrow Top Rail - #3148 Drop Plate: For use where a narrow top rail prevents the closer from being mounted directly to the door surface. This drop plate can be used to mount a closer on a top rail as narrow as 2-7/16" (62mm) in height.

FULL COVER INSTALLATIONS

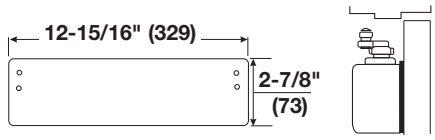

Exposed Back - #3445 Molded Full Cover Decorative Back Plate: For use on doors with glass lights where a closer with molded full cover is installed and the closer back is exposed. This plate covers the back of the installation to give a pleasing appearance from the reverse side.

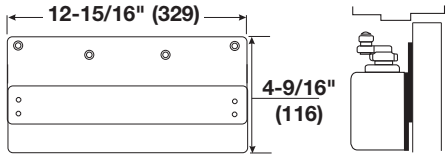

Exposed Back/Narrow Top Rail - #3448 Molded Full Cover Drop Plate Kit: For use on doors with glass lights where a closer with molded full cover is installed and the back of the closer is exposed. Kit consists of a 3148 Drop Plate and a 3445 Decorative Back Plate. This covers the back of the installation and gives a pleasing appearance from the reverse side.

METAL COVER INSTALLATIONS

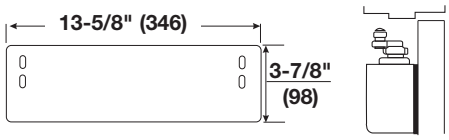

Exposed Back - #3545 Metal Full Cover Decorative Back Plate: For use on doors with glass lights where a closer with full metal cover is installed and the back of the closer is exposed. This plate covers the back of the installation and gives a pleasing appearance from the reverse side.

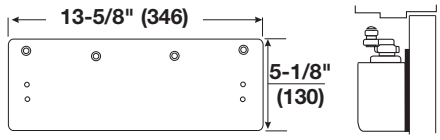

Exposed Back/Narrow Top Rail - #3548 Metal Full Cover Drop Plate: For use on doors with glass lights where a closer with metal full cover is installed on a narrow top rail, and the back of the cover is exposed. This drop plate can be used to mount a closer on a top rail as narrow as 2-9/16" (65mm) in height. This plate covers the back of the installation and gives a pleasing appearance from the reverse side.

ARCHITECTURAL PLASTIC OR METAL COVER INSTALLATIONS

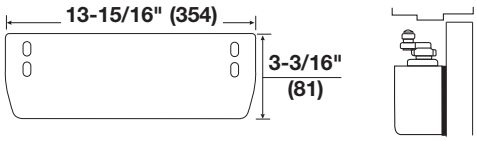

Exposed Back - #3545A Architectural Plastic or Architectural Metal Cover Decorative Back Plate: For use on doors with glass lights where a closer with an architectural plastic or metal cover is installed and the closer back is exposed. This plate covers the back of the installation to give a pleasing appearance from the reverse side.

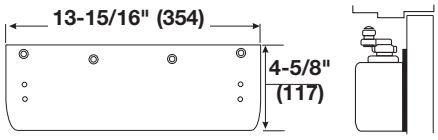

Exposed Back/Narrow Top Rail - #3548A Architectural Plastic or Architectural Plastic or Architectural Metal Cover Drop Plate: For use on doors with glass lights where a closer with an architectural plastic or metal cover is installed on a narrow top rail, and the back of the cover is exposed. This drop plate can be used to mount a closer on a top rail as narrow as 2-7/16" (62mm) in height. This plate covers the back of the installation to give a pleasing appearance from the reverse side.

Note: All measurements are Inches/mm.

ACCESSORIES

UNI STOP ARM

CLOSER MOUNTING PLATE

SOFFIT PLATE REINFORCING BRACKETS (FOR PARALLEL ARM)

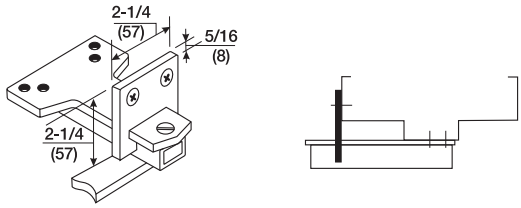

Additional Support - #6190 Reinforcing Bracket: Standard for use with all parallel arm UNI Stop door controls. Provides additional support to the soffit plate on installations with door frame reveals from 1-7/8" to 4-5/8" (48mm to 117mm).

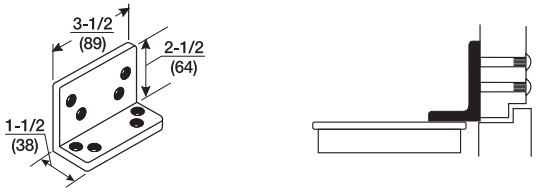

Flush Rabbeted Transom - #589L Angle Bracket: Optional for use with all parallel arm UNI Stop door controls. For use where rabbeted or flush transom conditions prevent installation of the soffit plate assembly. This bracket fastens to the overhead transom to provide a mounting surface for the soffit plate assembly.

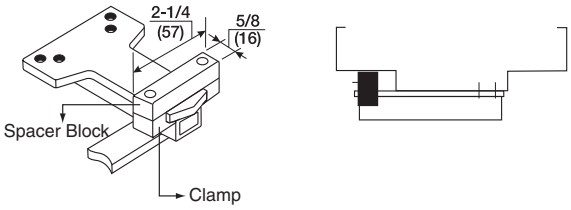

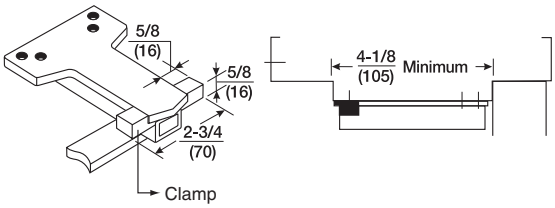

Wide Frame - #6191 Reinforcing Kit: Optional for use with all parallel arm UNI Stop door controls. Used to support the soffit plate on installations with wide frames. Clamps may be used with or without the spacer block, depending on frame conditions.

Note: All measurements are Inches/mm.

ACCESSORIES

UNI STOP ARM

CLOSER MOUNTING PLATES TOP JAMB

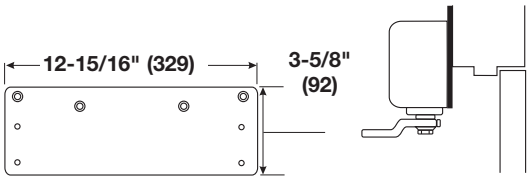

Narrow Top Rail - #3148 Drop Plate: For use where a narrow top rail prevents the closer from being mounted directly to the door surface. This drop plate can be used to mount a closer on a top rail as narrow as 2-7/16"(62mm) in height.

FULL COVER INSTALLATIONS

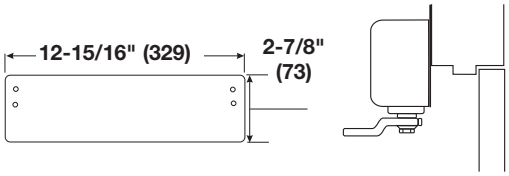

Exposed Back - #3445 Molded Full Cover Decorative Back Plate: For use on doors with glass lights where a closer with molded full cover is installed and the closer back is exposed. This plate covers the back of the installation to give a pleasing appearance from the reverse side.

METAL COVER INSTALLATIONS

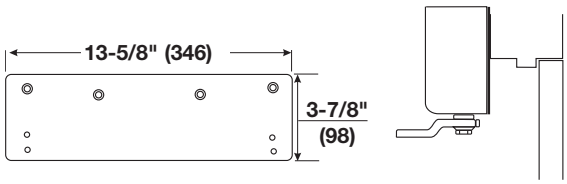

Low Ceiling Clearance -
Overhead Door Holder -
#3547 Metal Full Cover Drop Plate: For use where a low ceiling clearance prevents normal top jamb mounting. This plate is used when the clearance is between 1-5/8" and 3-3/4" (41mm and 95mm). Or for use where a surface or concealed overhead door holder prevents normal top jamb mounting of a closer with a metal full cover. This plate drops the closer and allows arm mounting screws to clear the bottom of the door holder. This places the centerline of the arm mounting screws at 3-7/8" (98mm) from the top of the door.

ARCHITECTURAL PLASTIC OR METAL COVER INSTALLATIONS

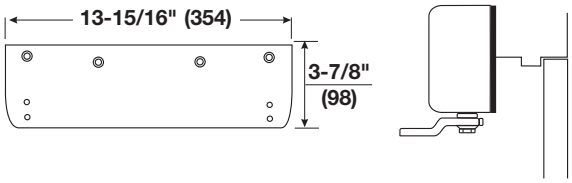

Low Ceiling Clearance -
Overhead Door Holder -
#3547A Architectural Plastic or Architectural Metal Cover Drop Plate: For use where low ceiling clearance prevents normal top jamb mounting. This plate is used when the clearance is between 1-5/8" and 3-3/4" (41mm and 95mm). Or for use where a surface or concealed overhead door holder prevents normal top jamb mounting of a closer with an architectural plastic or metal full cover. This plate drops the closer and allows arm mounting screws to clear the bottom of the door holder. This places the centerline of the arm mounting screws at 3-7/8" (98mm) from the top of the door.

Note: All measurements are Inches/mm.

PARTS

DOOR CLOSER BODY ASSEMBLIES

Closer Model	Catalog Number
3100 (size 2,3,4,5 or 6)	310XLAP
3300 (size 2,3,4,5 or 6)	
3500 (size 2,3,4,5 or 6)	
3301 or 3501	3101LAP

X= Specify Closer Size
LAP = Less All Parts

Covers	Type of Material			
Closer Series	**Plastic**	**Metal**	**Arch. Plastic**	**Arch. Metal**
3300 3301	3200P*	N/A	N/A	N/A
3500 3501	3400P	3400M	3400A	3400MA

FASTENERS

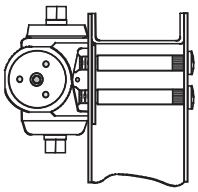

(Side view)

Steel Door Application Sex-nut / Sleeve-nut : "SN" (4 per pack) or Sex-nut / Sleeve-nut & Screw: "SNB" (4 per pack)		
Door	**SN's**	**SNB's**
1-3/8"	SN-138	SNB138-38
1-3/4"	SN-134	SNB134-38
2-1/4"	SN-214	SNB214-38
S.S. SNB's 1-3/4"	SN-134SS	SNB134SS-38

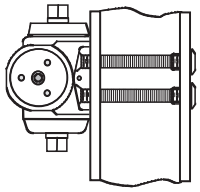

(Side view)

Aluminum and Wooden Door Application (Aluminum Door Shown) Through-bolt & Grommet Nut : "TBGN" (4 per pack)	
Door	**TBGN's**
1-3/8"	TBGN138-38
1-3/4"	TBGN134-38
2-1/4"	TBGN214-38

Note: All measurements are Inches/mm.

COVERS

Cover Model	Cover Drawing
Slim Line* **3200P** 1-3/4" high x 2-1/8" deep x 13" long (44 x 54 x 330)	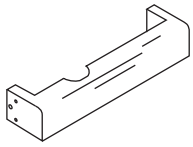
Full Plastic **3400P** 2-7/8" high x 2-1/8" deep x 13" long (73 x 54 x 330)	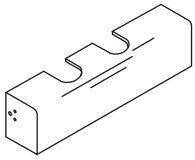
Full Metal **3400M** 3-7/8" high x 2-1/8" deep x 13-5/8" long (98 x 54 x 346)	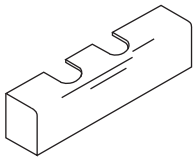
Architectural Plastic **3400A** 3-3/32" high x 2-1/4" deep x 13-7/8" long (79 x 57 x 352)	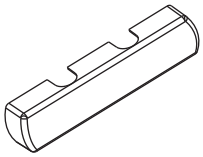
Architectural Metal **3400MA** 3" high x 2-3/16" deep x 13-15/16" long (76 x 56 x 354)	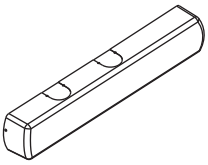

Arm Type	Torx® Screw Packs
Reg., Par. & Top Jamb	TX38
Rigid Parallel, Holder/Stop	PRTX38
Regular Rigid Heavy-Duty Arm	RTX38
Uni Stop Arm	UNITX38

***Pinion cap not included with Slim Line cover. Part #1639**

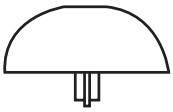

PARTS

NON-HOLD OPEN ARM ASSEMBLIES

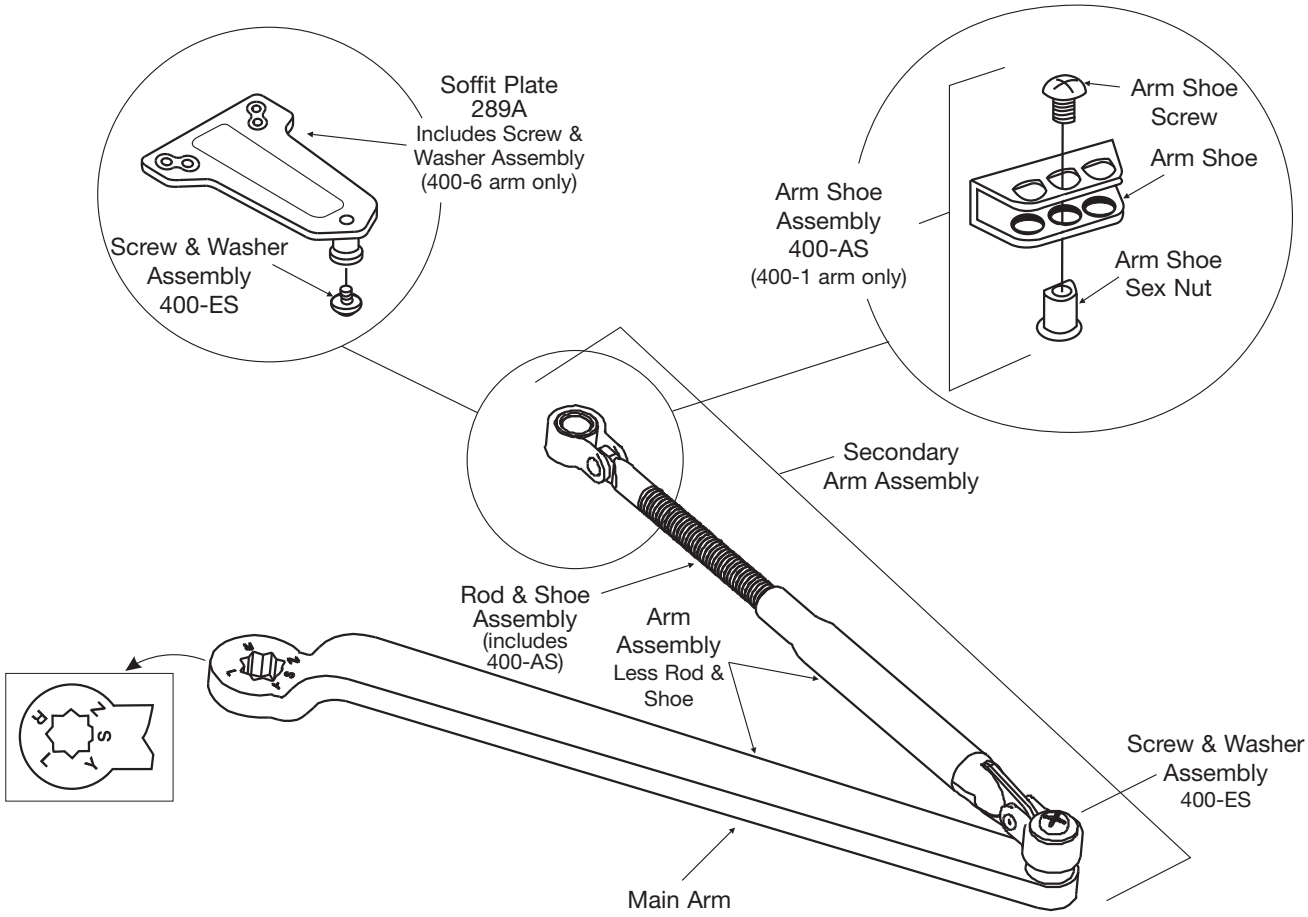

Note: Mounting hardware included with all parts orders.

Closer Series	Complete Arm Assembly	Main[1] Arm Assembly (length)(mm) (includes 400-ES)	Secondary Arm Assembly (includes 400-ES)	Arm Assembly Less Rod and Shoe	Rod & Shoe[2] Assembly (length)(mm)
3000	400-1	400-1M (11)(279)	400-111	400-1W	400-11 (8-7/8")(225)
TJ3000	400-1A		400-121		400-11A (12-9/16")(319)
P3000	400-6		400-116		400-16 (8-7/8")(225)
P3000[3]	400-6A		400-116A		400-16A (12-9/16")(319)
3000	400-26 (Tri-Packed® packaging includes 400-1 plus 289A plate)				

1. C/L to C/L length shown in parentheses.
2. C/L of connecting link to end of rod shown in parentheses.
3. For 180° door swing when using a special template for doors hung on 6" to 8" (162mm to 203mm) wide throw hinges.

PARTS

HOLD OPEN ARM ASSEMBLIES

400-13 Holder Shoe & Loop Assembly

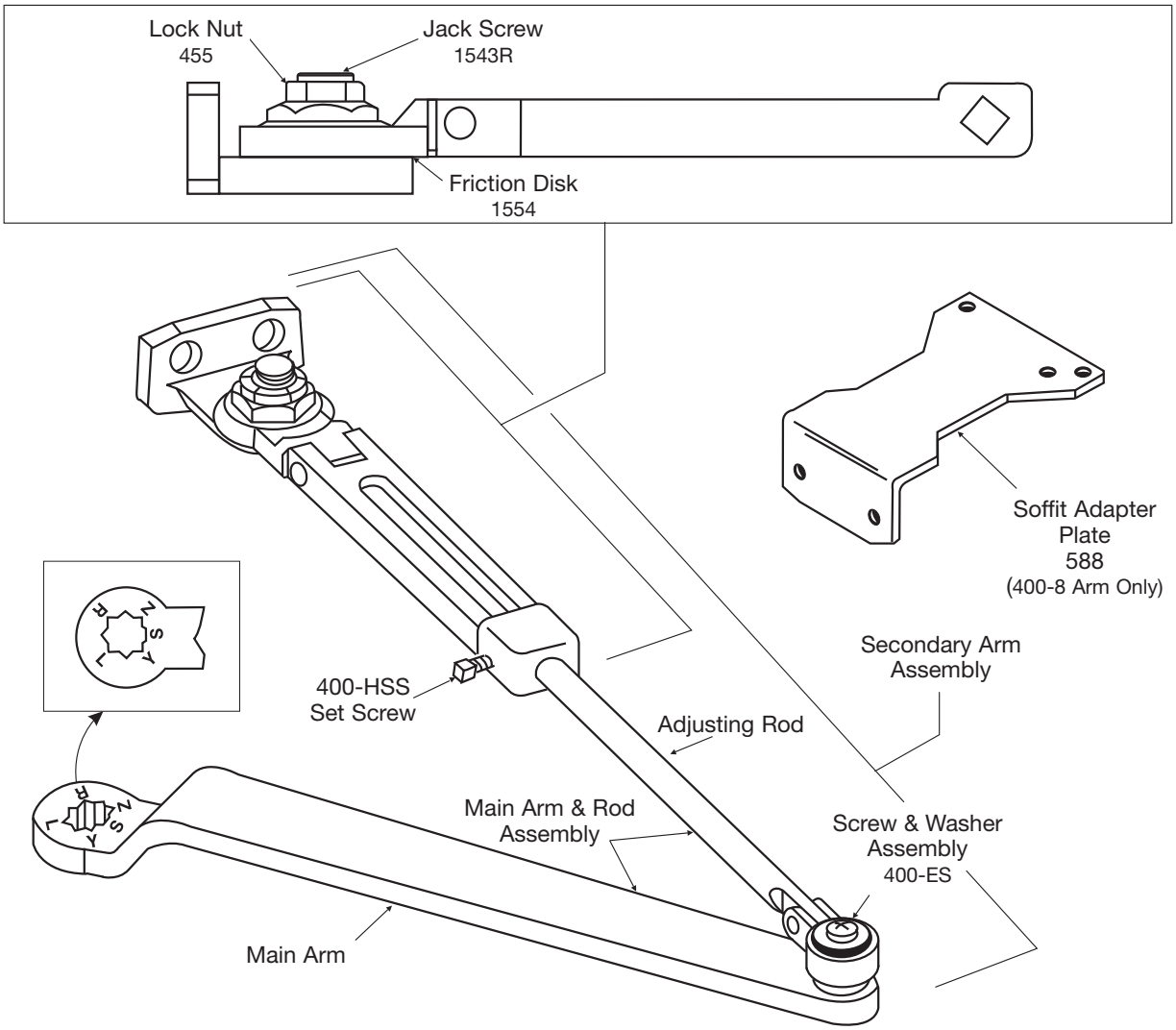

Note: Mounting hardware included with all parts orders.

Closer Series	Complete Arm Assembly	Main Arm[1] (Length)(mm) (includes 400-ES)	Secondary Arm (includes 400-ES)	Main Arm & Rod Assembly	Holder Shoe & Loop Assembly	Adjusting Arm[2] (length)(mm)
3010	400-3/ 400-8[3]	400-1M (11")(279)	400-113/400-118 (Reg.) / (Par.)	400-3W	400-13	400-31 (7-3/8")(187)
TJ3010	400-3A		400-123	400-3WA		400-31A (10-13/16")(275)

400-18- Holder Shoe & Loop Assembly (400-13) with Soffit Adapter Plate (588)

1. C/L to C/L length shown in parentheses.
2. C/L of connecting link to end of rod shown in parentheses.
3. Same as 400-3 but includes #588H soffit adapter plate.

PARTS

RIGID PARALLEL ARM ASSEMBLIES

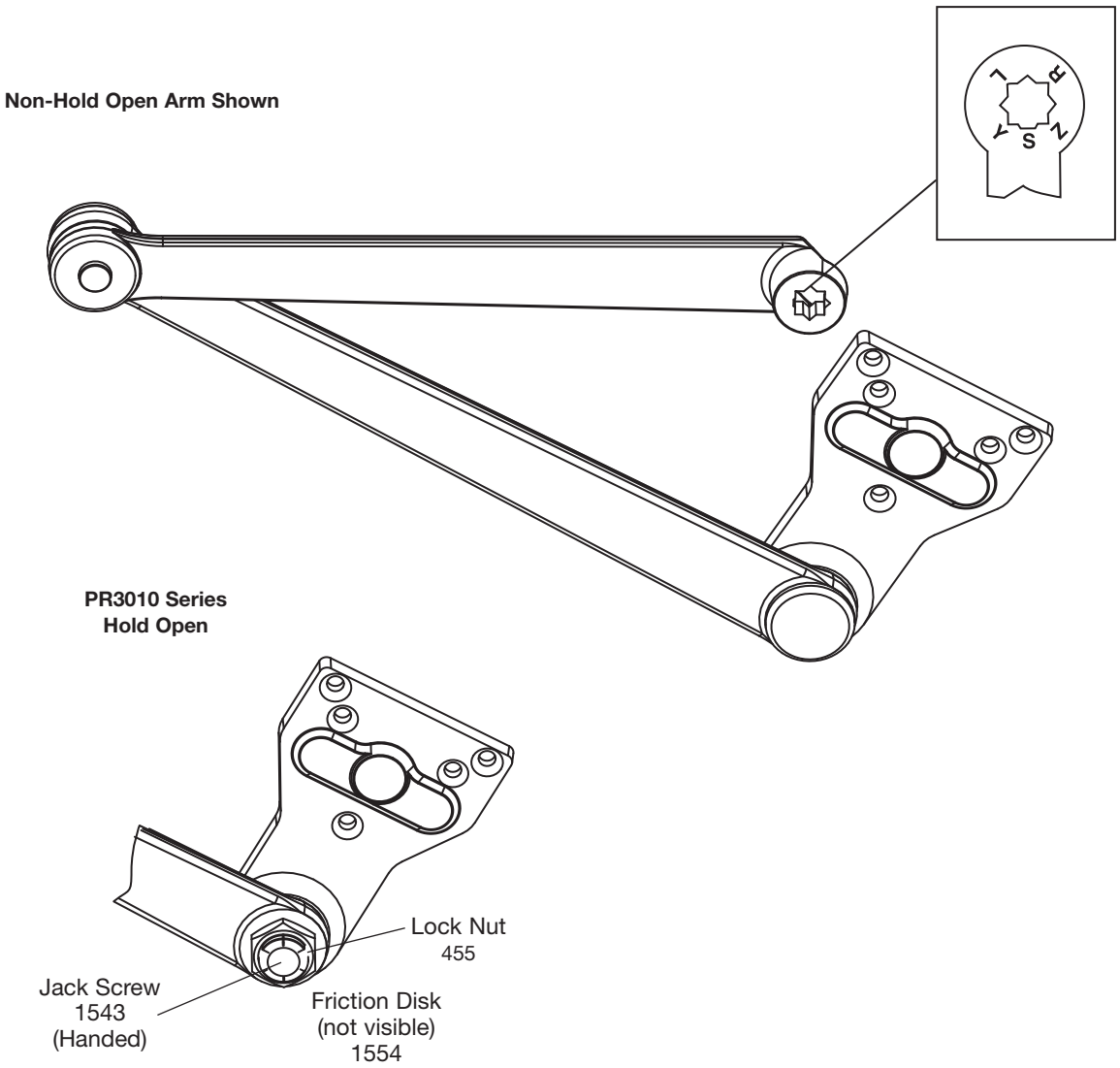

Note: Mounting hardware included with all parts orders.

Closer Series PR3000	Complete Arm Assembly
Non-Hold Open	PR400-5
Hold Open	PR400-8R (Right Hand)
	PR400-8L (Left Hand)

PARTS

HOLDER/STOP ARM ASSEMBLIES

Hold Open Arm Shown

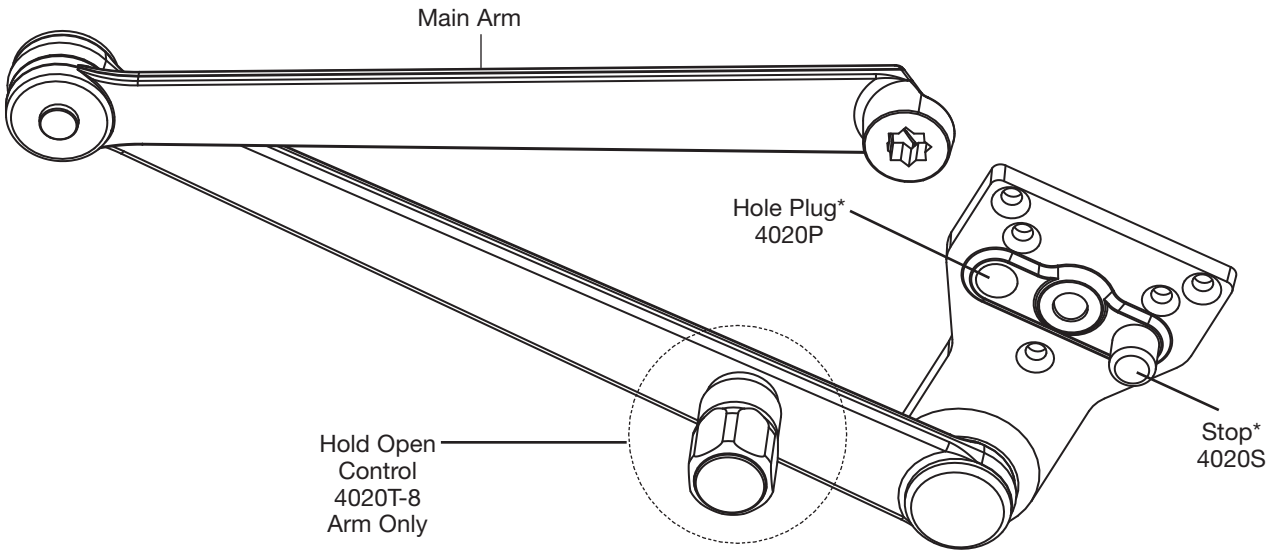

Note: Mounting hardware included with all parts orders.

Closer Series	Arm Function	Complete Arm Package
3020	Non-Hold Open	4020-5
3020T	Thumbturn Hold Open	4020T-8

*** These parts and screw pack are included with complete arm assemblies.**

PARTS

HOLDER/STOP SPRING ARM ASSEMBLIES

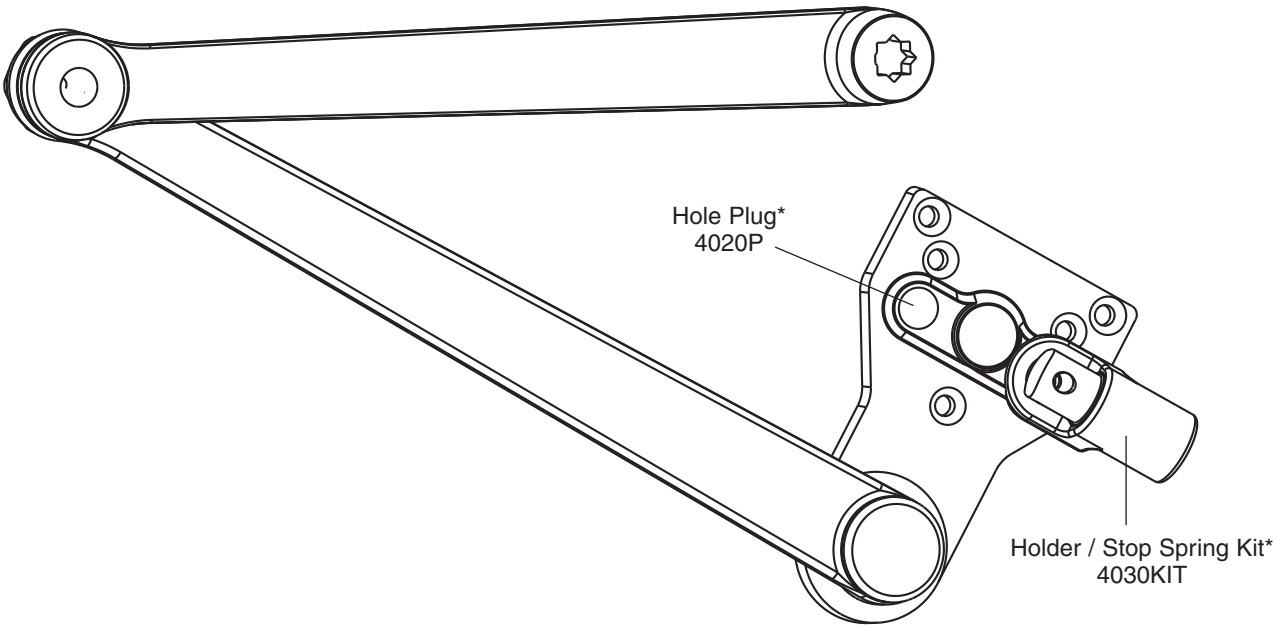

Note: Mounting hardware included with all parts orders.

Closer Series	Arm Function	Complete Arm Package
3330 / 3530	Non-Hold Open	4030-5
3330T / 3530T	Thumbturn Hold Open	4030T-8

*** These parts and screw pack are included with complete arm assemblies.**

PARTS

UNI STOP ARM ASSEMBLIES

Parallel Arm Hold Open & Non-Hold Open Series

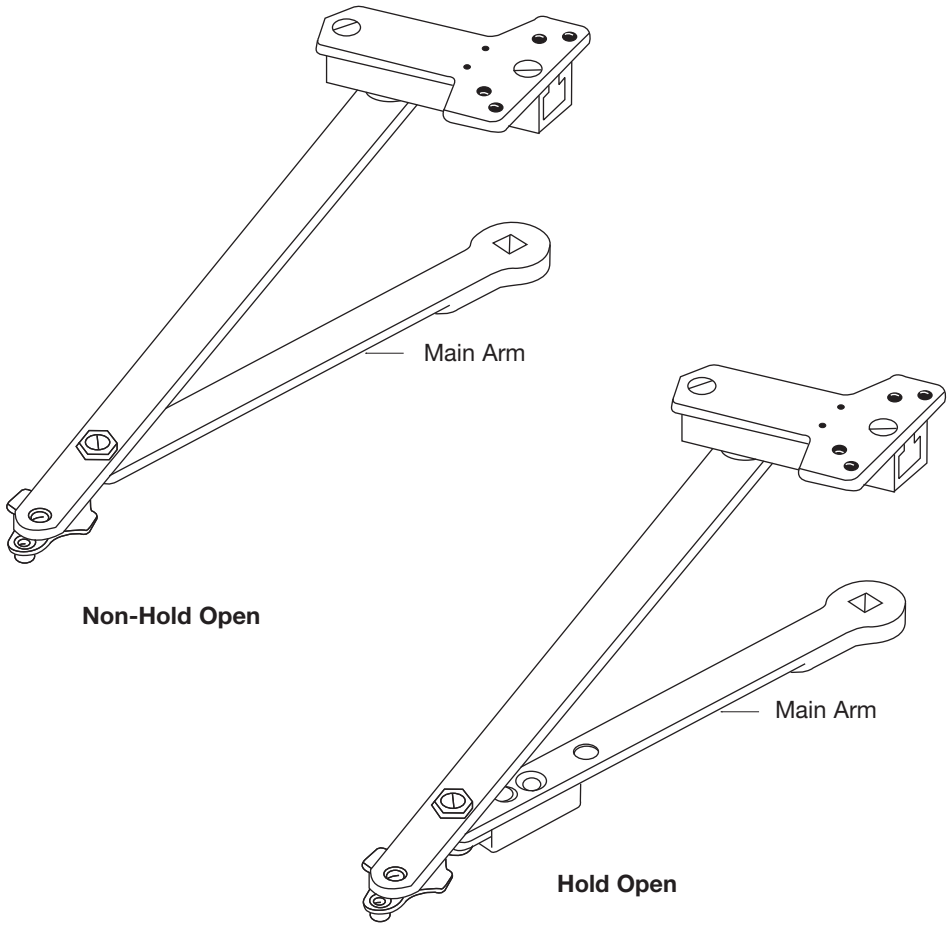

Note: Mounting hardware included with all parts orders.

Complete Arm Assembly		Door Width (cm)	Main Arm length (mm)
Non-Hold Open	Hold Open		
6100-11	6100-1	28" - 32" (71- 81)	9-1/2" (41)
6100-13	6100-3	33"- 41" (84 - 104)	11" (279)
6100-14	6100-4	42" - 48" (107 - 122)	12-1/2" (318)

PARTS

UNI STOP ARM ASSEMBLIES

Top Jamb Hold Open & Non-Hold Open Series

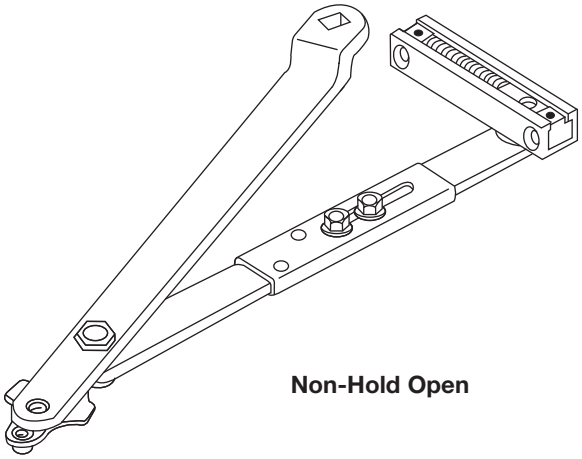

Non-Hold Open

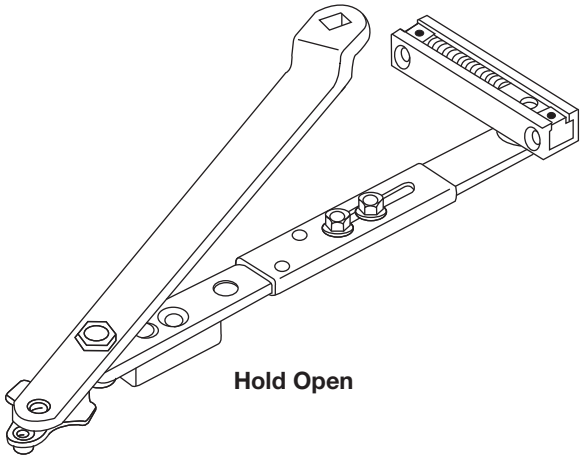

Hold Open

Note: Mounting hardware included with all parts orders.

Complete Arm Assembly		For Frame Reveals (mm)
Non-Hold Open	Hold Open	
J6100-4	J6100-7	2-1/8" - 3-1/4" (54 - 83)
J6200-4	J6200-7	1/2" - 2" (13 - 51)
J6400-4	J6400-7	3-3/8" - 4-1/4" (86 - 108)
J6500-41	J6500-71	4-3/8" - 5-3/8" (111 - 137)
J6500-42	J6500-72	5-1/2" - 6-3/8" (140 - 162)
J6500-43	J6500-73	6-1/2" - 7-3/8" (165 - 187)
J6600-4	J6600-7	0 - 3/8" (0 - 10)

REGULAR RIGID HEAVY-DUTY ARM

REGULAR RIGID HEAVY-DUTY ARM

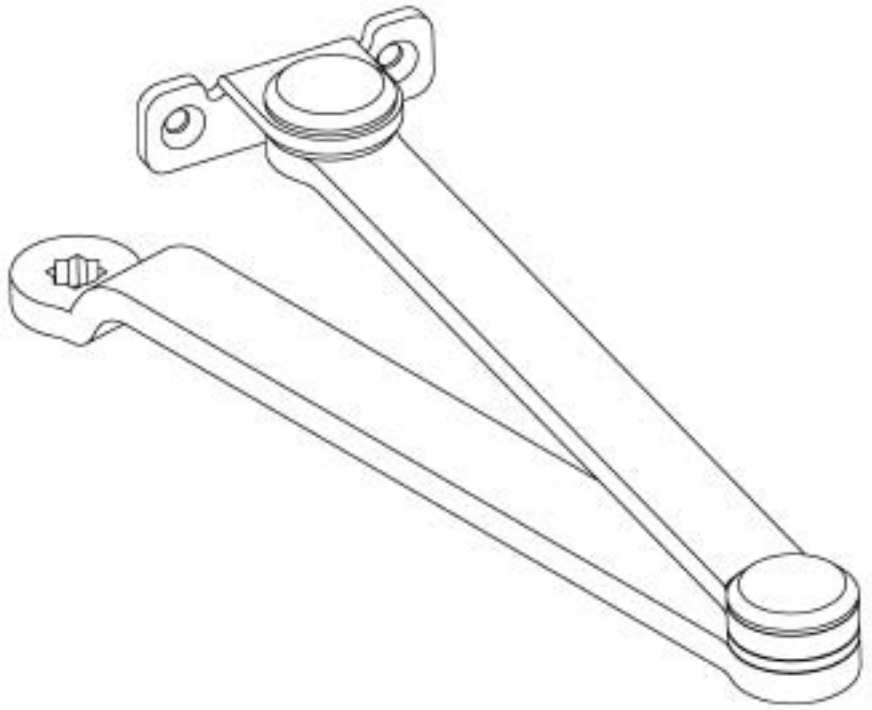

Note: Mounting hardware included with all parts orders.

Closer Series	Arm Function	Complete Arm Package
R3300 / R3500	Non-Hold Open	R400-1

PARTS

LOW PROFILE ARM ASSEMBLIES

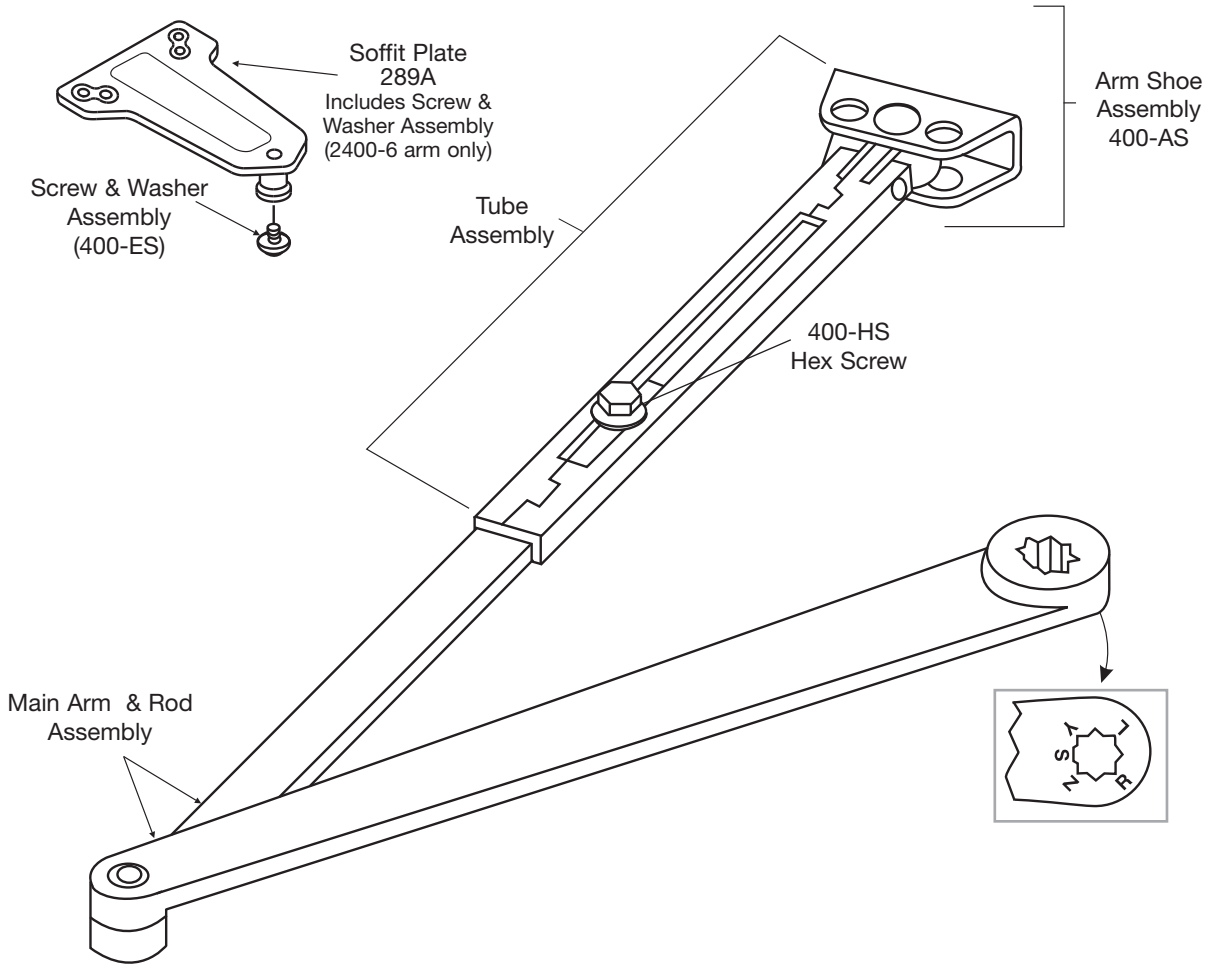

Note: Mounting hardware included with all parts orders.

Arm Application	Complete Arm Assembly	Main Arm & Adjusting Rod Assembly	Tube & Shoe/Soffit Assembly
Regular Arm	2400-1	2400-1MR	2400-1TS (With 400-AS)
Parallel Arm	2400-6		2400-6TS (With 289A)
Tri-Packed® Packaging	2400-26		

PARTS

TRACK & ARM ASSEMBLIES

Non-Hold Open	
Model	**Slide Track Assembly**
Pull side mounted	400ST-1T
Push side mounted	400ST-5T
Pull side mounted (180°)	400ST-1T180

Hold Open	
Model	**Slide Track Assembly**
Pull side mounted	400ST-3T
Push side mounted	400ST-8T

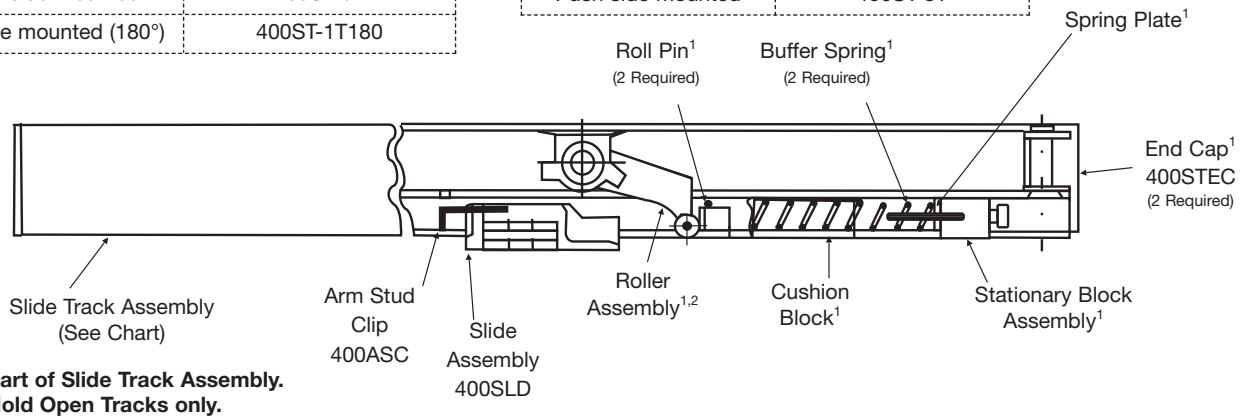

1. Part of Slide Track Assembly.
2. Hold Open Tracks only.

Standard Arm Assembly
400ST-1A[1,2]

Arm Tube Assembly
400ST-1AT[1]

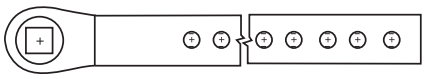

Adjusting Rod Assembly
400ST-1AR[1]

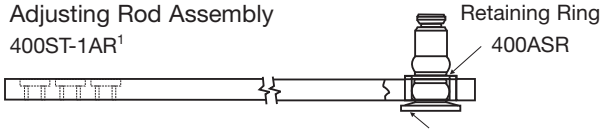

Double Egress Arm Assembly
400PT-DE-1R (Right Hand)[1,2]
400PT-DE-1L (Left Hand)[1,2]

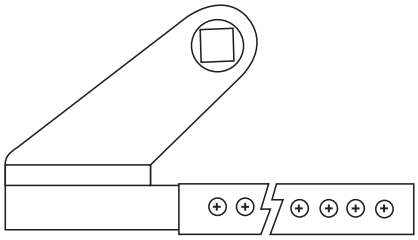

Adjusting Rod Assembly
400ST-1AR[1]

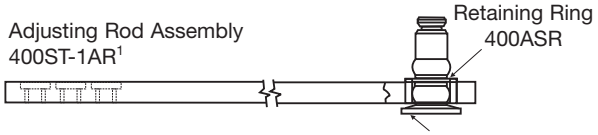

Arm Tube Assembly
400ST-1ATR[1] (right hand)
400ST-1ATL[1] (left hand)

STP Arm Assembly
400STP-1A[1,2]

Arm Tube Assembly
400STP-1AT[1]

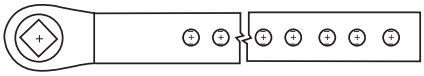

Adjusting Rod Assembly
400ST-1AR[1]

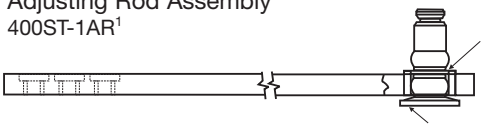

1. Includes arm length adjusting screw.
2. Includes arm tube & adjusting rod assembly.

Note: Mounting hardware included with all parts orders.

SUGGESTED SPECIFICATIONS

3301/3501 Series
Closers for interior and exterior doors shall be full rack-and-pinion type with cast aluminum alloy shell. Closers shall be surface mounted and shall project no more than 2-1/8" from the surface of the door with standard cover. Closers shall be non-handed to permit installation on doors of either hand. Closer fluid shall contain lubricity and anti-oxidation agents. Closer fluid shall maintain stable viscosity to allow door closer to perform in temperatures ranging from extremely high to as low as -40°F. Closers shall have multi-size spring power adjustment to permit setting of spring from (BF) 1 through 6 with additional spring power available. Closers shall have two non-critical valves, hex key adjusted, to independently regulate sweep and latch speed. Closers shall have adjustable backcheck intensity controlled by a hex key adjusted valve.

[Closers shall have adjustable delayed action closing controlled by a hex key adjustable valve.]

Regular arm and top jamb closers shall have a non-hold open shoe permitting 15% (+ or – 7-1/2%) power adjustment. **Closers shall be enclosed in a [molded resin cover] [plated or sprayed metal cover], Closers to be Yale® [3301/3501] [3501M] [3501MA] [3501A].

**For special arms insert that specification here (see column three on this page).

3300/3500 Series
Closers for interior and exterior doors shall be full rack-and-pinion type with cast aluminum alloy shell. Closers shall be surface mounted and shall project no more than 2-1/8" from the surface of the door with standard cover. Closers shall be non-handed to permit installation of doors of either hand. Closer fluid shall contain lubricity and anti-oxidation agents. Closer fluid shall maintain stable viscosity to allow door closer to perform in temperatures ranging from extremely high to as low as -40°F. Closers shall have power adjustment to permit a 50% increase in power over the minimum closing force for any size. Closers shall have two non-critical valves, hex key adjusted, to independently regulate sweep and latch speed. Closers shall have adjustable backcheck intensity controlled by a hex key adjusted valve.

[Closers shall have adjustable delayed action closing controlled by a hex key adjustable valve.]

Regular arm and top jamb closers shall have a non-hold open shoe permitting 15% (+ or – 7-1/2%) power adjustment.** Closers shall be enclosed in a [molded resin cover] [plated or sprayed metal cover], Closers to be Yale® [3300/3500] [3500M] [3500A] [3500MA].

**For special arms insert that specification here (see column three on this page).

****UNI Stop Arm**
Door closers shall have field reversible door stop effective at one point selected at installation, from 90° - 115° in five-degree increments. Door stop shall be cushioned by a shock-absorbing heavy duty spring action effective at the [soffit plate] [arm shoe] pivot. [Closers shall be provided for parallel arm installation using rigid steel main arm and secondary arm lengths proportional to the door width.] [Closers shall be provided for top jamb installation using steel, rigid main arm and telescoping secondary arm adequate for the frame reveal of the openings.]

****Holder/Stop Arm**
Door closers shall have a field reversible door stop. Door closer shall have a feature with selectable on and off ball and detent hold open. Hold open tension shall be adjustable effective at one point selected at installation, from 85° - 110° in five degree increments. Door stop mechanism shall be non-handed and attach to soffit plate. [Hold open mechanism shall have engage/disengage selection actuated by thumbturn]. Closers shall be provided for parallel arm installation using rigid steel main and secondary arm.

****Holder/Stop Spring Arm**
Door closers shall have built in door stop [and holder] effective at one point selected at intallation, from 85° - 110° in five degree increments. Door stop mechanism shall have a buffer spring that engages prior to the dead stop feature, reducing shock loads to the door and frame assembly. Door stop mechanism shall be non-handed and attached to soffit plate. [Hold open mechanism shall have engage/disengage selection actuated by thumbturn]. Closers shall be provided for parallel installation using rigid steel main and secondary arm.

HOW TO ORDER

Specifies Cover Options

"1" – Without cover
"3" – Closer with slim line cover
"5" – Closer with full cover

Specifies Closer Size

"1" – Normal Power Range – adjustable sizes 1 through 6
"2" – ANSI size 2
"3" – ANSI size 3
"4" – ANSI size 4
"5" – ANSI size 5
"6" – ANSI size 6

Prefix	3	3	0	0	Suffix	x Finish (refer to page 2

Defines Closer Series

Specifies Type of Arm

"0" – Standard
"1" – Specifies hold open arms (except Holder/Stop closers)
"2" – Specifies Holder/Stop arm
"3" – Specifies Holder/Stop Spring arm
"8" – Specifies low profile arm (non-hold open closers only)

Type of Installation:

None – 3301/3501 - Installs Regular arm, Parallel arm or Top Jamb to 3" reveal
3300/3500 – Installs Regular arm or Top Jamb (to 3" reveal)

TJ – Top Jamb, reveals 2-3/4" to 7", 150° opening.

J - Top Jamb mount Slide Track closers only

P – Push (stop) side slide track only

PA – 3300/3500 – Parallel arm only
3301/3501 – Parallel arm with specialty brackets
3380/3580 – Low Profile Parallel arm

PR – Rigid Parallel arm - specify hand for hold open function

PRO – Rigid Parallel Offset arm – specify hand for hold open function

R – Rigid heavy duty arm (Torx screws not included – N/A in stainless steel).

UNI – Uni Stop arm (parallel arm only – specify door width)

UNIJ – Uni Stop arm (top jamb only – specify frame reveal)

Options

M – Metal Cover (optional); 3500 and 3501 closers only. Specify hand for Top Jamb application.
A – Architectural Plastic Cover (optional); 3500 and 3501 only.
MA – Architectural Metal Cover (optional); 3500 and 3501 only.
T – Thumbturn hold open on Holder/Stop and Holder/Stop Spring arms
DL – Adjustable Delayed Action Closing

online literature and templates

For the latest information on Yale Commercial Lock and Hardware products, visit our website at www.yalecommercial.com.

Click on the "Literature" button to find:

- Catalogs
- Parts manuals
- Templates
- Specifications
- Installation instructions

Yale® customers can click on the ebusiness symbol on the website to register for an ebusiness account to:

- Check the status of orders
- Check availability of Quick-Ship items
- Track your order and confirm delivery
- Receive email notification of template changes

And More...

www.yalecommercial.com

Yale Commercial Locks and Hardware

Address: 100 Yale Avenue, Lenoir City, TN 37771-3226 USA

Tel: 1-800-438-1951 ● *Fax:* 1-800-338-0965 ● www.yalecommercial.com

Yale-Corbin Canada Ltd.

Address: 6940 Edwards Boulevard, Mississauga, Ontario, Canada L5T 2W2

Tel: 1-800-461-3007 ● *Fax:* 1-800-461-8989 ● www.yalecorbin.on.ca

ASSA ABLOY NA International

www.aanai.com

Yale® and Yale Security Inc.® are registered trademarks of Yale Security Inc. Other products brand names may be trademarks or registered trademarks of their respective owners and are mentioned for reference purposes only. Copyright© 2001, 2005 Yale Security Inc. All rights reserved. These materials are protected under US copyright laws. All contents current at time of publication. Yale Security Inc. reserves the right to change availability of any item in this bulletin, its design, construction, and/or its materials.

The ASSA ABLOY Group is the world's leading manufacturer and supplier of locking solutions, dedicated to satisfying end-user needs for security, safety and convenience.

An ASSA ABLOY Group brand

ASSA ABLOY

42072-MA-10.0-7/05R