Yale®

NARROW PROJECTION FULL-COVER DOOR CLOSER

400/4400 SERIES

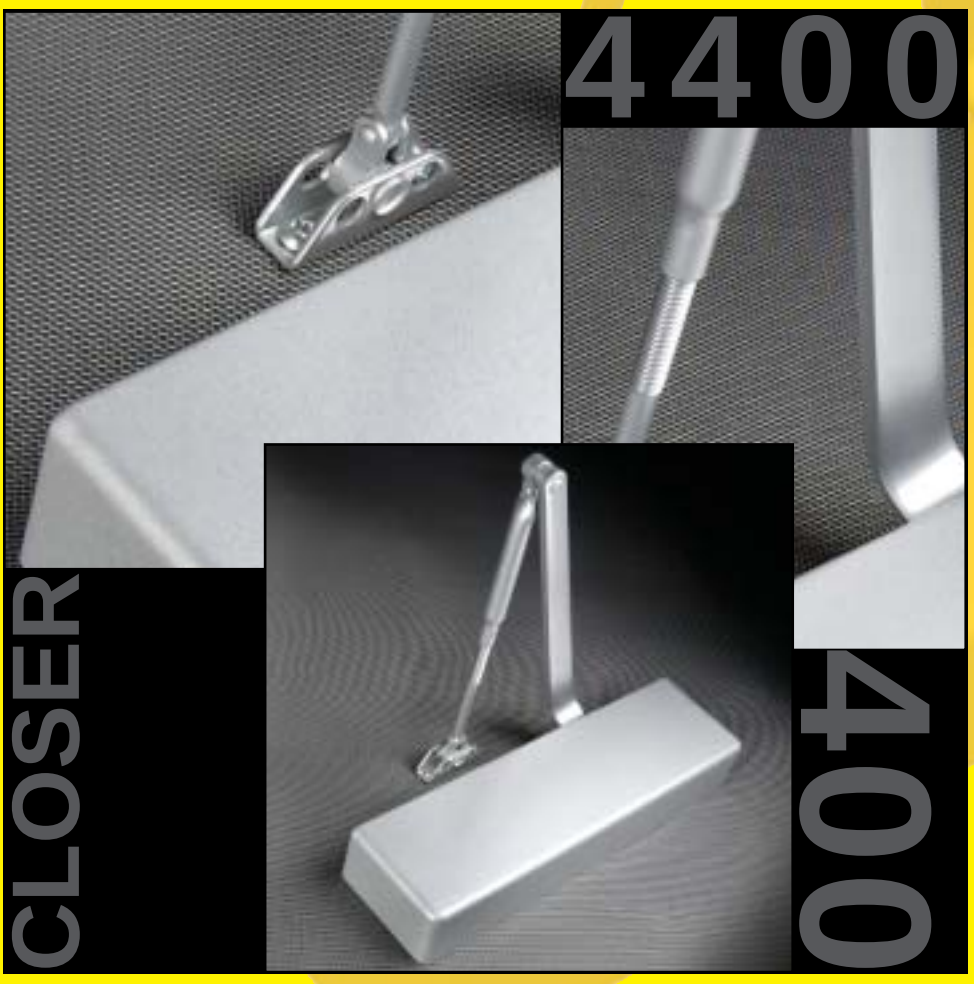

CATALOG

An ASSA ABLOY Group brand

ASSA ABLOY

THE ENGINEER'S CHOICE

Yale's 400/4400 Series Institutional Door Closers offer customers the ideal combination of superior performance, quality and strength. With new pinion and piston materials, improved valve design, and staked valves, the closers are the most efficient, dependable closers in the industry. The addition of a size 1-6 spring for the 4400's also simplifies the process of specifying and ordering product.

This U.L. listed, ANSI/BHMA Grade 1 closer has a proven history. It is an ideal choice for interior or exterior doors in facilities that demand reliability such as schools, office buildings, hospitals, department stores and airports.

FINISHES

Product will be painted with a combination of waterborne acrylic and polyester powder coat. Closers will withstand 120 hours of salt spray. (The ANSI requirement is 25 hours.)

Sprayed Finishes

Description	Specify New Yale® Designation (BHMA)	Complements the following finishes	Old Yale® Designation
Aluminum	689	628, 625, 629, 630, 651, 652	SB
Statuary Bronze	690	640, 613, 695	STAT
Dull Bronze	691	612, 637, 639	BL
Black	693	315	315
Medium Amber	694	312	312
Gold	696	605, 606, 632, 633	GB
Prime Coat (Beige)*	600		SRI
Corrosion Inhibitor Prime Coat	SRI		SRI

*** Available at extra cost. Closers can be ordered prime coated only, i.e. (SRI) or prime coated with finish, i.e. SRI x 690.**

Plated Finishes		Cover		
		Metal	Plastic	
Bright Brass	605E	Yes	Yes	US3
Satin Brass	606E	Yes	No	US4
Bright Bronze	611E	Yes	No	US9
Satin Bronze	612E	Yes	No	US10
Oxidized Oil Rubbed Bronze	613E	Yes	No	US10B
Bright Chrome	625E	Yes	Yes	US26
Satin Chrome	626E	Yes	No	US26D

*** When a plated finish is ordered, arm and cover will be plated unless "cover only" is specified.**

CONTENTS

Introduction 2
Overview 3
Features 4-5
Optional Features 6
Suggested Specifications 7
Applications 8-10
Technical Details 11-23
Accessories 24-30
Parts List 31-43
How To Order 44-46

OVERVIEW

CUTAWAY VIEW OF CLOSER BODY

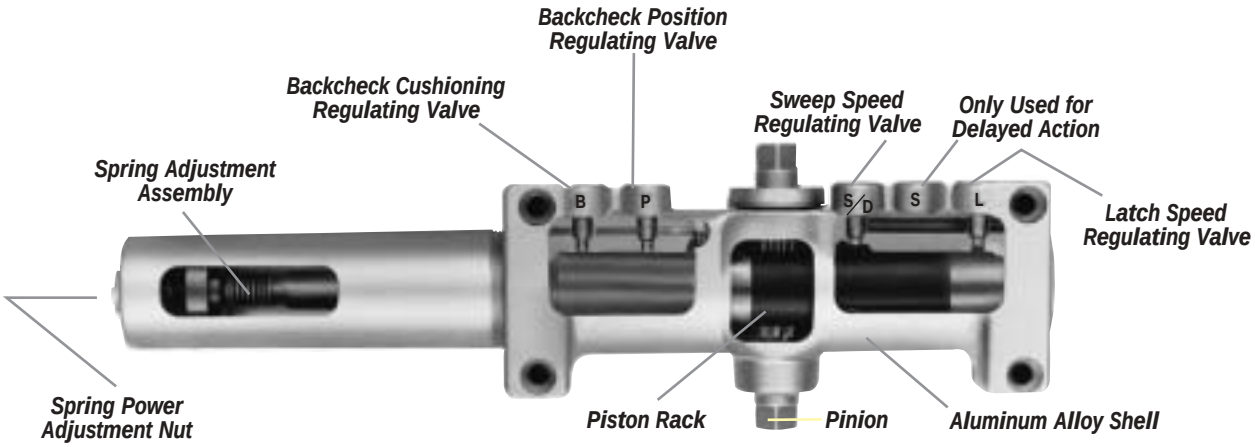

COMPLIANCE STANDARDS

4400 Series door closers are designed to comply with requirements of the Americans with Disabilities Act (A.D.A.) and ANSI standard A117.1. All series 400/4400 comply with ANSI/BHMA A156.4 Grade 1 Specification. All Yale® series 400/4400 closers with non-hold open arms are listed by Underwriters Laboratories for labeled fire doors. This includes compliance to UL10C and UBC-72 (1997) for 3-hour assemblies. The product is manufactured in an ISO 9001 facility. These closers are also listed by the New York City Materials and Equipment Acceptance Division.

STANDARD ON ALL 400/4400 SERIES CLOSERS

- ANSI A156.4, Grade 1
- 10-year warranty
- Non-handed
- UL10C compliant
- Staked valves
- Cast aluminum body
- Rack-and-pinion design
- 1-1/2" (38mm) diameter piston
- 5/8" (16mm) diameter pinion journals
- Separate and independent, latch, sweep and backcheck intensity valves
- 2-1/8" (54mm) projection
- All standard arm applications allow doors to swing 180°, conditions permitting

Choice of Features	4400	400
Adjustable spring sizes 1 through 6	X	
Sized springs 2, 3, 4, 5, & 6 with 50% power adjustment		X
Tri-packed (regular arm, top jamb, and parallel arm mounting)	X	
Bi-packed (regular arm and top jamb mounting)		X
Corrosion-resistant model available	X	
Metal cover (optional)	X	X
Enhanced backcheck (optional)	X	X
Delayed action with pressure relief valve (optional)	X	X
Available with PR, Holder/Stop, UNI Stop, ST and STP arm and track options	X	X

FEATURES

FASTENERS

All closers with standard non-hold open and hold open arms are shipped with self-drilling/self-tapping and machine screws. Sleeve nuts (SN) may be ordered as an option.

- PR, Holder/Stop, UNI Stop arms and slide tracks have machine screws and sleeve nuts for the closer body as part of the standard screw packs.
- Sleeve nuts (SN) are available for all closers and should be used on steel doors to prevent dimpling, or where proper door reinforcement has not been provided.
- Standard sleeve nuts are for 1-3/4" (44mm) doors. 1-3/8" (35mm) or 2-1/4" (57mm) door thicknesses are available and must be specified.
- Through-bolts and grommet nuts (TBGN) are another fastener alternative for wood or aluminum doors. Specify door thickness 1-3/4" (44mm), 1-3/8" (35mm), or 2-1/4" (57mm) when ordering.
- Lobular Torx® drive screws, for tamper resistance, are standard with series SCR400, SCR4400. Available as a special order for all other series closers.

Note: If other fasteners are required, the factory must be consulted to determine if those fasteners can be provided. If the fasteners can be supplied, this information must be clearly stated on the purchase order.

FEATURES

Aluminum Alloy Housing
Closer bodies are constructed of a special aluminum alloy, carefully selected to accommodate interactive steel components and operating conditions.

Rack & Pinion Operation
Provides a smooth constant control of the door through its full opening and closing cycle. 180° door swing can be achieved when door, frame, hardware and arm function do not interfere.

Non-handed
With few exceptions all 400 series and 4400 series door closers are non-handed and can be installed on either right or left-hand swing doors. Pinion shaft extends vertically through the closer body in both directions. This permits the closer to be positioned on either right or left hand doors for most applications. Some options, as noted on page 5, will require that the hand of the closer be specified.

Sweep Speed Control Valve
Allows adjustment of door speed from the door's full open position down to approximately 10° from the closed position.

Latch Speed Control Valve
Allows adjustment of door speed from approximately 10° down to the door's fully closed position.

Closer Fluid
All door closers are supplied with a temperature stable, muti-viscosity fluid. This fluid will permit the door closer to perform within a wide temperature range: from very high to as low as -40°F.

Tri-Packed
4400 series come with screws, brackets and soffit plates to allow for regular, top jamb, and parallel arm installations.

Adjustable Backcheck Cushion Valve
Provides control of the door in the opening cycle, beginning at approximately 75° of door opening. It cushions the door opening when the door is forcibly opened beyond its pre-adjusted limits.

Adjustable Backcheck Position Valve
Allows the door opening position, where backcheck cushioning begins to be adjusted to a greater door angle up to a maximum of 20º farther (approximately 95º).

Standard Molded Covers
Molded of high-impact U.L. listed material. This cover is non-handed for all applications. See page 5 for optional metal cover.

Warranty
Limited ten-year warranty for defects and life of the building on the aluminum housing.

FEATURES

DOOR CLOSER POWER OPTIONS

Series 400 Sized Door Closer
Available in five different power sizes (2, 3, 4, 5 or 6). Each power size is adjustable up to 50% stronger than the minimum closing force for that size, as outlined in ANSI standard A156.4 with option PT 4C.

Series 4400 Multi-sized Door Closer
Adjustable through the power range of sizes 1 through 6; as outlined in ANSI standard A156.4. with option PT 4H.

The series 4400 also conforms to the minimum opening force requirements for The American with Disabilities Act (ADA) and ANSI standard A117.1 for interior doors.

OPTIONAL COVERS

Optional Metal Cover
This steel cover is non-handed for regular and parallel arm applications, but is handed for top jamb applications. Cover is available in sprayed or plated finishes.

OPTIONAL FEATURES

Corrosion-Resistant Door Closer
The series 4400S door closers with molded plastic cover are available for use where corrosive conditions exist. This series is provided with zinc die-cast adjustment valves, a 440 grade stainless steel pinion shaft, an all-aluminum body and bronze closer arm bushing; all other components and fasteners are of 302/303 grade stainless steel. This product is available for standard regular arm, top jamb and parallel arm, non-hold open applications only.

Security Cover
Is supplied standard with all series SCR400 and SCR4400 door closers. This extruded aluminum cover with zinc die-cast end caps is handed for all applications. The cover is fastened to the closer body at two points on top and to the door closer cover bracket at two points on the bottom. See Security Closer Catalog for more information.

OPTIONAL FEATURES

DELAYED ACTION

Adjustable Delayed Action Closing
An optional hydraulic feature that adds a third speed range to the closing cycle. This feature becomes effective when the door is opened and released at any point beyond 70°. The amount of time delay depends upon the combination of the angle of door release and valve adjustment. The valve can be adjusted with a 1/8" (3mm) hex key from no delay time up to maximum delay times of:

Door Opened and Released at	Approximate Time of Delay Cycle
180°	4-5 minutes
120°	2-3 minutes
90°	25-30 seconds

Pressure Relief Safety Valve
The delayed action hydraulic system contains a pressure relief valve. Any time the door is forced toward the closed direction while it is in the closing cycle, the valve will open and permit the door to close. This prevents damage to door, frame and closer.

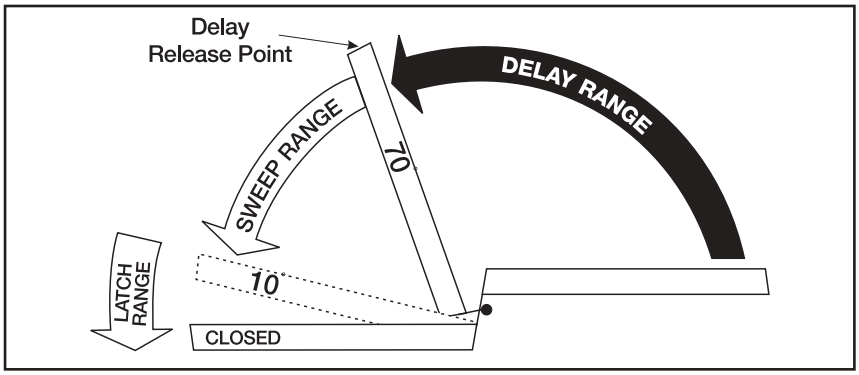

Suggested Applications
Delayed Action closing allows slow-moving traffic to clear the opening before the door closer's normal closing cycle begins. This feature can be helpful in health care facilities such as hospitals and nursing homes. It provides sufficient time for persons on crutches or in wheelchairs to pass through a door without concern of it closing. At the same time, it can accommodate the facility's staff with movement of food service carts, beds, and other wheeled traffic.

Use of delayed action closers on many doors throughout industrial and commercial buildings can also assist the flow of traffic. Locations where additional time to clear the opening is advantageous are doors between office and factory/ warehouse facilities, doors to workshops or laboratories, to kitchen and food processing areas... to list just a few.

ARMS

Non-Hold Open
Self-closes door every time door is opened. Auxiliary stop (by others) required except when using the Holder/Stop or UNI Stop arms.

Hold Open
Achieved by means of friction or ball and detent/ roller. Friction hold open has a range of 90° to 180° using template location and mechanical adjustment.

Ball and detent or roller hold open is effective in a range of 85° to 110°.

Hold open arm door closers are not permitted to be used on fire door assemblies.

Door Opening Degrees

Arm Function	Regular Arm, Top Jamb, Parallel Arm	Rigid Parallel Arm	Holder/Stop Parallel Arm	UNI Stop Parallel Arm	UNI Stop Top Jamb	Low Profile	Slide Track
NON-HOLD OPEN	✓	✓	85° to 110°	85° to 110°	85° to 110°	✓	85° to 110°/180°
HOLD OPEN	90° to 180°	85° to 180°	85° to 110°	85° to 110°	85° to 110°	N/A	85° to 110°

✓=180° trim and template permitting

SUGGESTED SPECIFICATIONS

4400 SERIES

Closers for interior and exterior doors shall be full rack-and-pinion type with cast aluminum alloy shell. Closers shall be surface mounted and shall project no more that 2-1/8" from the surface of the door. Closers shall be non-handed to permit installation on doors of either hand. Closer fluid shall contain lubricity and anti-oxidation agents. Closer fluid shall maintain stable viscosity to allow door closer to perform in temperatures ranging from extremely high to as low as -40°F. Closers shall have multi-size spring power adjustment to permit setting of spring from size 1 through 6. Closers shall have two non-critical valves, hex key adjusted, to independently regulate sweep and latch speed. Closers shall have backcheck cushioning controlled by a hex key adjusted valve. Closers shall have backcheck position controlled by a hex key adjusted valve.

[Closers shall have adjustable delayed-action closing controlled by a hex key adjustable valve.]

[Closers shall be highly corrosion resistant and shall have all external body components of aluminum, zinc alloy or stainless steel material and all fasteners of stainless steel.]

Regular arm and top jamb closers shall have a non-hold open shoe permitting 15% (± 7-1/2%) power adjustment.**Closers shall be enclosed in a [molded resin cover], [plated or sprayed metal cover]. Closers to be Yale® [4400] [4400M] [4400S].

**For special arms insert the appropriate specification here (see below).

400 SERIES

Closers for interior and exterior doors shall be full rack-and-pinion type with cast aluminum alloy shell. Closers shall be surface mounted and shall project no more that 2-1/8" from the surface of the door. Closers shall be non-handed to permit installation of doors of either hand. Closer fluid shall contain lubricity and anti-oxidation agents. Closer fluid shall maintain stable viscosity to allow door closer to perform in temperatures ranging from extremely high to as low as -40°F. Closers shall have power adjustment to permit a 50% increase in power over the minimum closing force for any size. Closers shall have two non-critical valves, hex key adjusted, to independently regulate sweep and latch speed. Closers shall have backcheck cushioning controlled by a hex key adjusted valve. Closers shall have backcheck position controlled by a hex key adjusted valve.

[Closers shall have adjustable delayed action closing controlled by a hex key adjustable valve.]

Regular arm and top jamb closers shall have a non-hold open shoe permitting 15% (+/ – 7-1/2%) power adjustment.** Closers shall be enclosed in a [molded resin cover] [plated or sprayed metal cover] Closers to be Yale® [400] [400M].

**For special arms insert the appropriate specification here (see below).

**UNI™ STOP ARM

Door closers shall have built in door stop [and holder] effective at one point selected at installation, from 90° - 115° in five-degree increments. Door stop shall be cushioned by a shock-absorbing heavy-duty spring action effective at the [soffit plate] [arm shoe] pivot. [Closers shall be provided for parallel arm installation using rigid steel main arm and secondary arm lengths proportional to the door width.] [Closers shall be provided for top jamb installation using steel, rigid main arm and telescoping secondary arm adequate for the frame reveal of the openings.]

**HOLDER/STOP™ ARM

Door closers shall have built in door stop [and holder] effective at one point selected at installation, from 85° - 110° in five degree increments. Door stop mechanism shall be non-handed and attach to soffit plate. [Hold open mechanism shall have engage/disengage selection actuated by thumbturn.] Closers shall be provided for parallel arm installation using rigid steel main and secondary arm.

APPILICATIONS

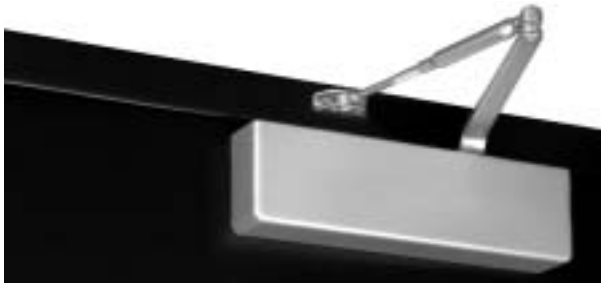

Non-hold open arm shown.
Hold open arm available.

Regular Arm

This is the only pull-side application where a double lever arm is used. It is the most power efficient application for a door closer. Sufficient frame, door and/or ceiling clearance must be considered.

Since the arm assembly projects directly out from the frame, this application may present an aesthetics issue or be prone to vandalism.

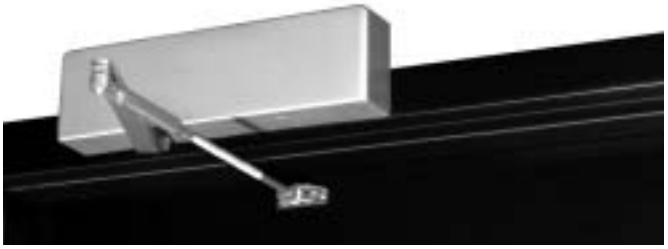

Non-hold open arm shown.
Hold open arm available.

Top Jamb

For efficiency reasons this application provides the best alternative to the regular arm application. There must be sufficient frame face and/or ceiling clearance for this application. It requires a top rail on the door of just 2-1/8” (54mm). This application provides the best door control for doors in exterior walls that swing out of a building.

The entire door closer and arm assembly project from the frame, similar to the regular arm application, where the matters of appearance and malicious abuse can be of concern. Consideration must be given to depth of reveal.

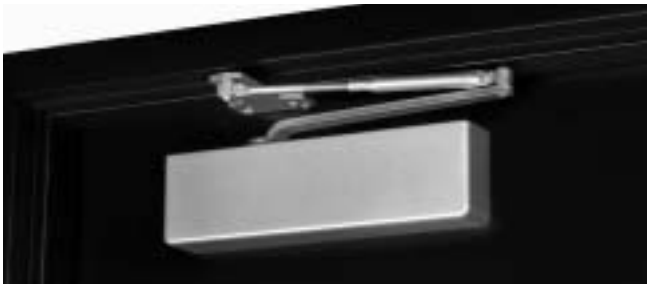

Non-hold open arm shown.
Hold open arm available.

Parallel Arm

This application provides the most appealing design appearance for a surface-mounted door closer having a double lever arm. This also makes it beneficial in vandalism-prone areas. It is on the push side of the door and the arm assembly extends almost parallel to the door. In the closed position, there is very little or no hardware projecting beyond the frame face in most situations.

Due to the geometry of the arm it is approximately 25% less power efficient than a regular arm application.

The entire closer and arm assembly are mounted below the frame stop, requiring a top rail clearance on the door of between 6-5/8" (168mm), when using a low profile arm, to 7-1/4" (184mm), when using the hold open arm.

APPLICATIONS

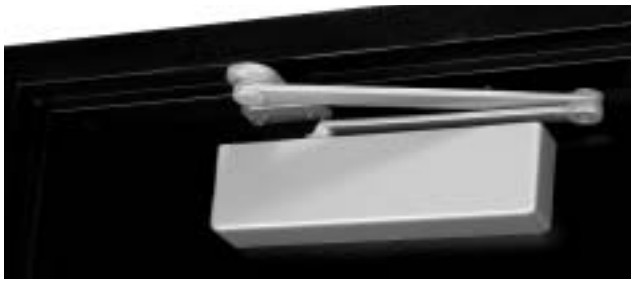

Non-hold open arm shown

Rigid Parallel Arm

An enhanced variation of the standard parallel arm assembly that is intended for use in heavy traffic areas where auxiliary door stops are installed. Hold open available - specify hand when ordering.

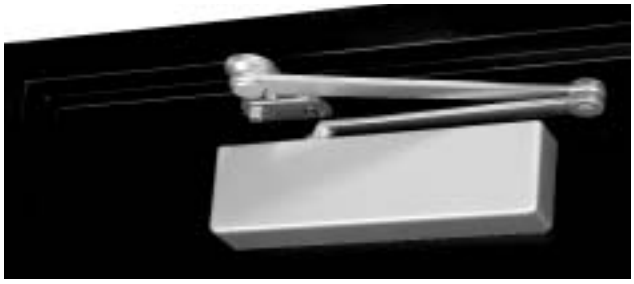

Hold open arm shown

Holder/Stop Arm

Similar to the Rigid Parallel arm, this arm incorporates a stop at the arm's soffit plate to dead stop the door at a predetermined degree of door swing between 85° and 110°, in 5° increments. Prior to dead stop the door closer's backcheck feature slows the door speed to reduce the impact of the stop action.

Holder/Stop Arm is intended for use where an auxiliary door stop cannot be utilized and no more than moderate abuse is anticipated. Where more extreme conditions are expected, use of a UNI Stop arm is recommended.

Thumbturn hold open available. (Hold open strength is adjustable.)

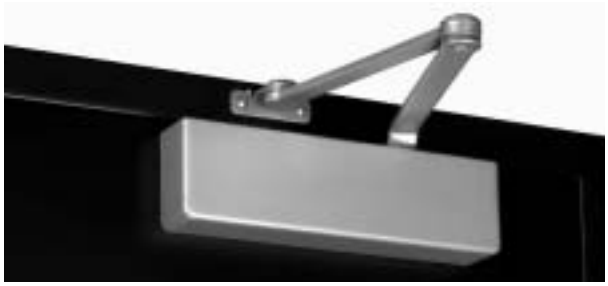

Regular Rigid Heavy-Duty Arm

This double lever arm features a non-adjustable secondary arm. Orbitally riveted joints prevent tampering or disassembly. The rigid heavy-duty arm is standard with the security closers featuring a regular arm (SCR4400 or SCR400) but is also available with standard product. Prefix "R" to model number. Available non-hold open only.

APPLICATIONS

Parallel arm

Top jamb

Uni Stop™ Arm

Can be used for either parallel arm or top jamb applications. Uni Stop arms combine the features of a double lever arm overhead door stop/holder with the backcheck feature of the door closer to reduce door stopping shock loads to a minimum. A compression spring buffer at the soffit plate/arm shoe absorbs 30 lbs. of force, 5° prior to the door's dead stop. Coupled with the door closer's backcheck feature, this is the most controlled stop available with a surface door closer.

For parallel arm applications there are three different length arm assemblies. Each length is designed for a specific range of door widths, to provide precise door control. This further lessens the dead stop impact on the door's hinges/pivots.

For top jamb applications, depth of reveal must be specified.

Regular arm

Parallel arm

Low Profile Arm

Supplied with 2400/4480 series door closers for non-hold open installations only. These arms have a reduced height elbow joint and a straight main arm. This enables the door closer to be installed in less vertical space:

Regular Arm Allows closer to be installed where there is as little as 1" (25mm) of frame face or ceiling clearance.

Parallel Arm Allows closer to be installed 1/2" (13mm) higher up on door then standard parallel arm application.

REGULAR ARM

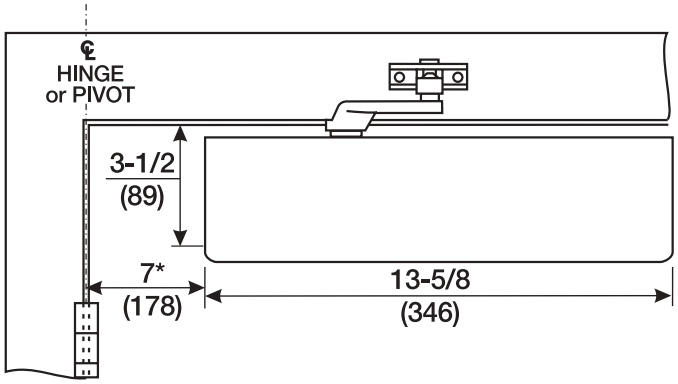

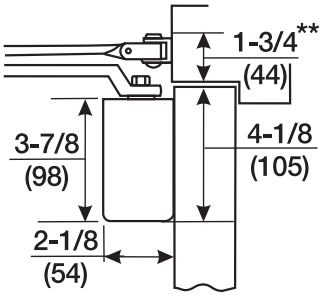

Mounting holes for closer body are spaced 2-3/8" (60mm) vertically x 6-3/4" (171mm) horizontally.

* For doors opening up to 100°
** This dimension will vary. Standard non-hold open arm illustrated.

Maximum Door Width					
Inches (cm)		Sized Closer		Multi-Sized Closer	
		Non-Hold Open	Hold Open	Non-Hold Open	Hold Open
Interior	Exterior	Model Number			
32" (81)	30" (76)	402	1402	4400	4410
38" (97)	34" (86)	403	1403		
48" (122)	42" (107)	404	1404		
54" (137)	48" (122)	405	1405		
Unusual Conditions		406	1406		

Note: 4400 door closers can be adjusted for door sizes noted. All multi-size door closers are set at mid power range from the factory.

TOP JAMB ARM

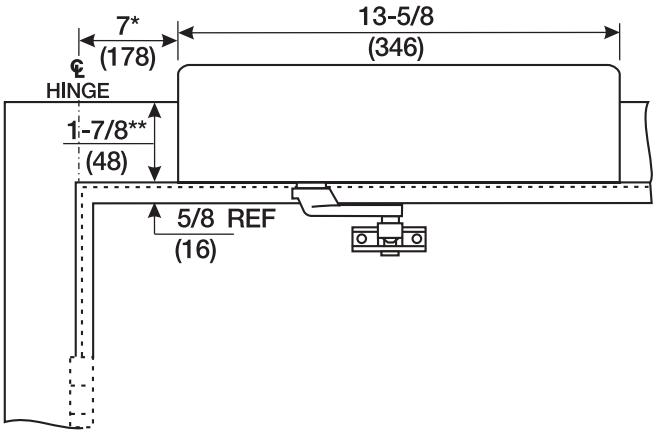

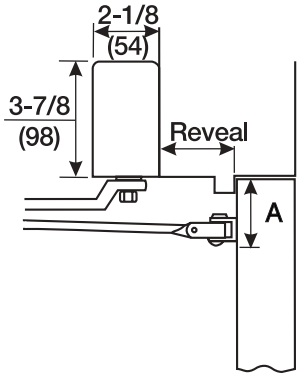

Mounting holes for closer body are spaced 2-3/8" (86mm) vertically x 6-3/4" (171mm) horizontally.

* For doors opening up to 100°
** Minimum frame face with 486 drop plate.
3-1/4" (83mm) required when drop plate is not used.

Model Number		Reveal Range Inches	Maximum Door Opening
Sized Closer	**Multi-Sized Closer**	**Non-Hold Open Arm**	
400/400M	4400/4400M	0" to 3" (0 to 76mm)	180°
TJ400	TJ4400	2-3/4" to 7" (70 to 178mm)	150°
TJL400	TJL4400	2-3/4" to 7" (70 to 178mm)	180°
TJ2480 x 487	TJL4480 x 487	0" to 2-3/4" (0 to 70mm)	180°
Sized Closer	**Multi-Sized Closer**	**Hold Open Arm**	
1400 1400M	4410 4410M	0" to 3" (0 to 76mm)	180°
TJ1400	TJL4410	2-3/4" to 6-3/4 (70 to 171mm)	150°
TJL1400	TJL4410	2-3/4" to 6-3/4" (70 to 171mm)	180°

A Minimum top rail of door					
Without drop plate or with 486 back plate (mm)			**With 487 drop plate (mm)**		
TJ400/ TJ400M TJ4400/ TJ4400M	TJ1400/ TJ1400M TJL4410/ TJL4410M	TJ2400 TJL4480	TJ400/ TJ400M TJ4400/ TJ4400M	TJ14OO TJ1400M TJL4410/ TJL4410M	TJ2400 TJL4480
2" (51)	2-1/2" (64)	N/A	4-1/8" (105)	4-5/8" (117)	3-5/8" (92)

Maximum Door Width					
Inches (cm)		**Sized Closer**		**Multi-Sized Closer**	
		Non-Hold Open	**Hold Open**	**Non-Hold Open**	**Hold Open**
Interior	**Exterior**	**Model Number**			
32" (81)	30" (76)	TJ402	TJ1402	4400	4410
38" (97)	34" (86)	TJ403	TJ1403		
48" (122)	42" (107)	TJ404	TJ1404		
54" (137)	48" (122)	TJ405	TJ1405		
Unusual Conditions		TJ406	TJ1406		

Note: 4400 door closers can be adjusted for door sizes noted. All multi-size door closers are set at mid power range from the factory.

PARALLEL ARM

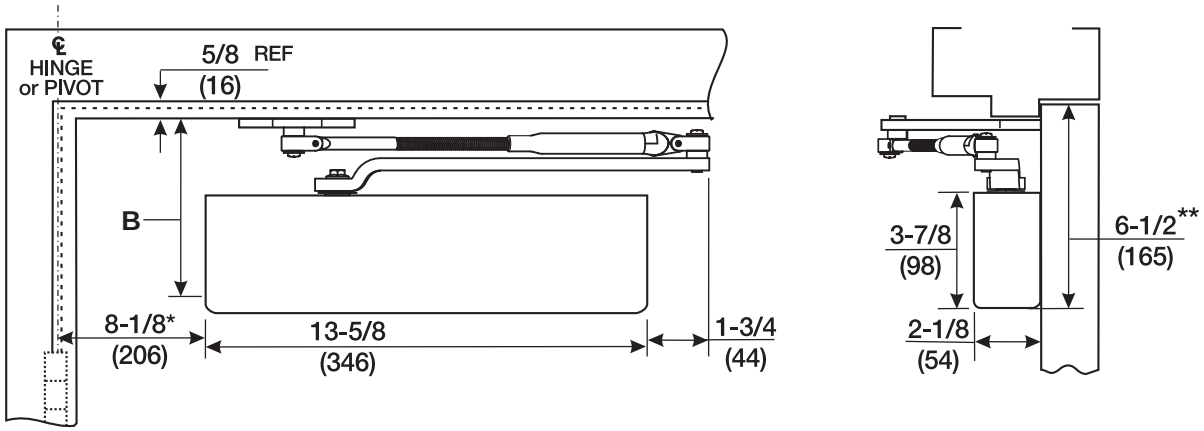

Mounting holes for closer body are spaced 2-3/8" (86mm) vertically x 6-3/4" (171mm) horizontally.

* For doors opening up to 100°
** This dimension will vary. Standard non-hold open arm illustrated.

B Minimum top rail of door with 5/8" (16mm) frame stop				
Without drop plate (mm)			With 487 drop plate (mm)	
PA400 4400	PA1400 4410	PA2400 4480	PA1400 4410	PA2400 4480
5-7/8" (149)	6-1/4" (159)	5-3/8" (137)	2-3/4" (70)	1-7/8" (48)

Maximum Door Width					
Inches (cm)		Sized Closer		Multi-Sized Closer	
		Non-Hold Open	Hold Open	Non-Hold Open	Hold Open
Interior	Exterior	Model Number			
30" (76)	—	PA402	PA1402	4400	4410
36" (91)	30" (76)	PA403	PA1403		
42" (107)	36" (91)	PA404	PA1404		
48" (122)	42" (107)	PA405	PA1405		
54" (122)	48" (122)	PA406	PA1406		

Note: 4400 door closers can be adjusted for door sizes noted. All multi-size door closers are set at mid power range from the factory.

RIGID PARALLEL ARM

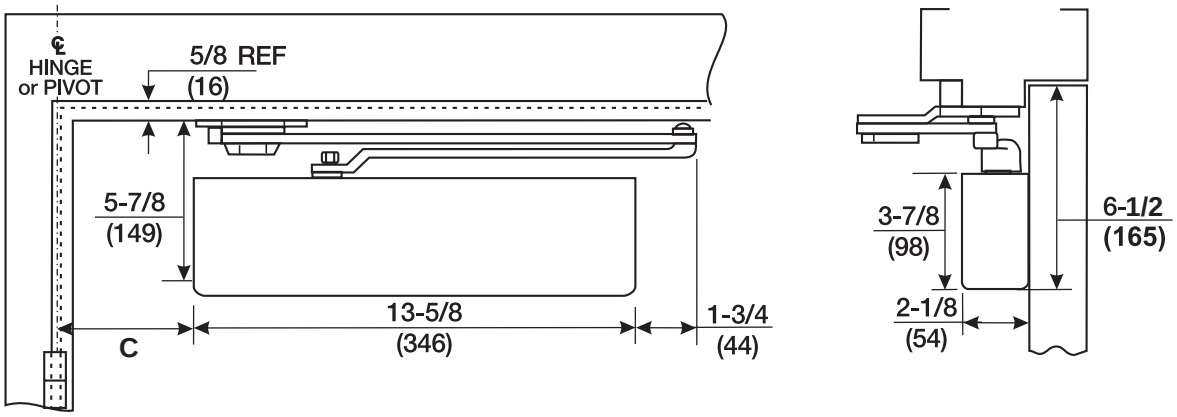

Mounting holes for closer body are spaced 2-3/8" (60mm) vertically x 6-3/4" (171mm) horizontally.

C Template Position Hold Open or Non-Hold Open (mm)		
0° to 100°	101° to 120°	121° to 180°
8-1/8" (206)	7-1/8" (181)	6-1/8" (156)

Maximum Door Width					
Inches (cm)		Sized Closer		Multi-Sized Closer	
		Non-Hold Open	Hold Open	Non-Hold Open	Hold Open
Interior	Exterior	Model Number			
30" (76)		PR402	PR1402	PR4400	PR4410
36" (91)	32" (81)	PR403	PR1403		
42" (107)	36" (91)	PR404	PR1404		
48" (122)	42" (107)	PR405	PR1405		
—	48" (122)	PR406	PR1406		

Note: 4400 door closers can be adjusted for door sizes noted. All multi-size door closers are set at mid power range from the factory.

HOLDER/STOP ARM

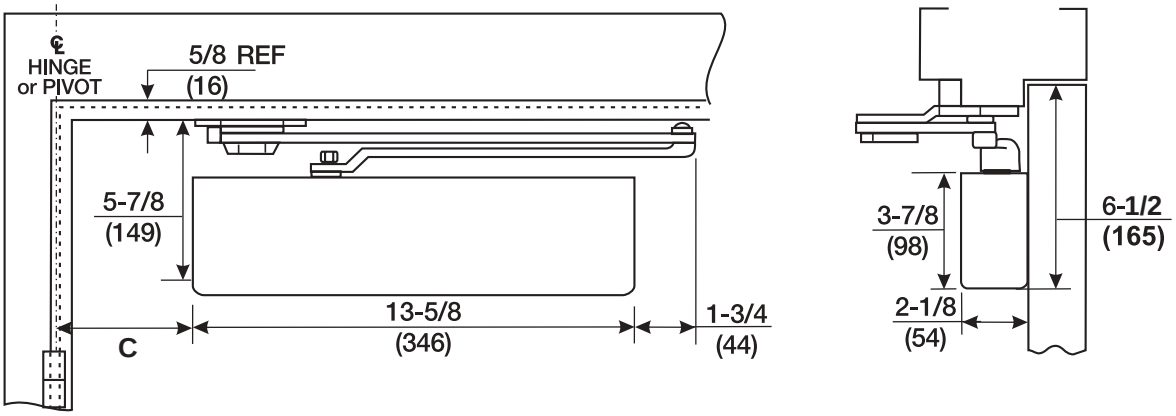

Mounting holes for closer body are spaced 2-3/8" (60mm) vertically x 6-3/4" (171mm) horizontally.

C Template Position for Hold Open or Stop at Listed Angle (mm)					
85°	90°	95°	100°	105°	110°
9-5/8 (244)	8-3/4 (222)	8-1/4 (210)	7-3/8 (187)	6-7/8 (175)	6-1/4 (159)

Maximum Door Width					
Inches (cm)		Sized Closer		Multi-Sized Closer	
		Non-Hold Open	Thumbturn Hold Open	Non-Hold Open	Thumbturn Hold Open
Interior	Exterior	Model Number			
30" (76)		4022	4022T	4420	4420T
36" (91)	32" (81)	4023	4023T		
42" (107)	36" (91)	4024	4024T		
48" (122)	42" (107)	4025	4025T		
	48" (122)	4026	4026T		

Note: 4400 door closers can be adjusted for door sizes noted. All multi-size door closers are set at mid power range from the factory.

REGULAR RIGID HEAVY DUTY ARM

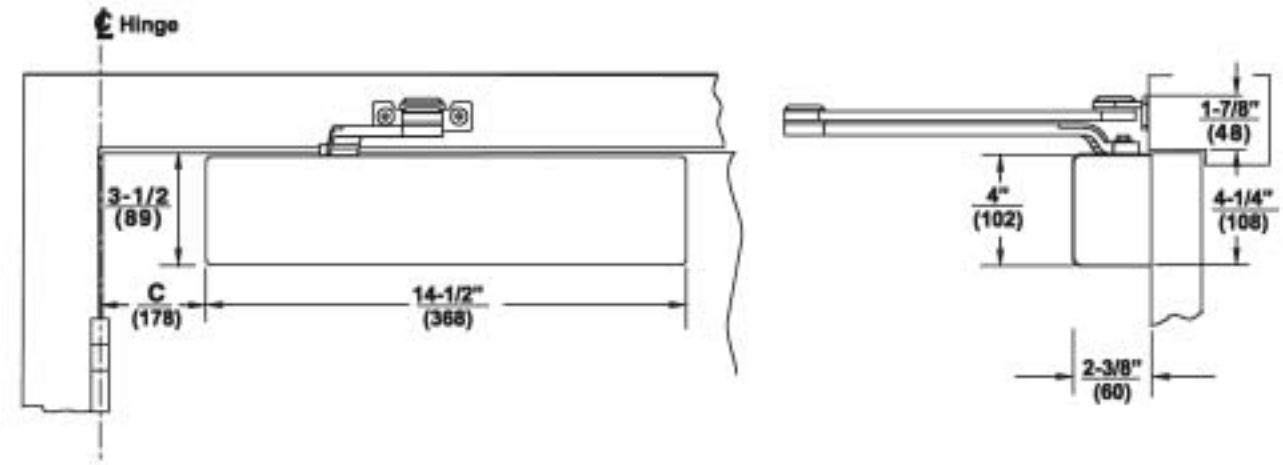

Mounting holes for closer body are spaced 2-3/8" (60mm) vertically x 6-3/4" (171mm) horizontally.

Door Opening	Dimensions C Inches (mm)
to 100°	6-3/8" (182)
100° to 120°	5-3/8" (137)
121° to 150°	3-3/8" (86)
151° to 180°	3-1/8" (79)

Maximum Door Width			
Inches (cm)		Sized Closer	Multi-Sized Closer
		Non-Hold Open	
Interior	Exterior	Model Number	
36" (91)	30" (76)	R402	R4400
42" (107)	36" (91)	R403	
46" (122)	42" (107)	R404	
54" (137)	48" (122)	R405	
	52" (132)	R406	

Note: 4400 door closers can be adjusted for door sizes noted. Multi-size door closers are set at mid power range from the factory.

UNI STOP™ PARALLEL ARM

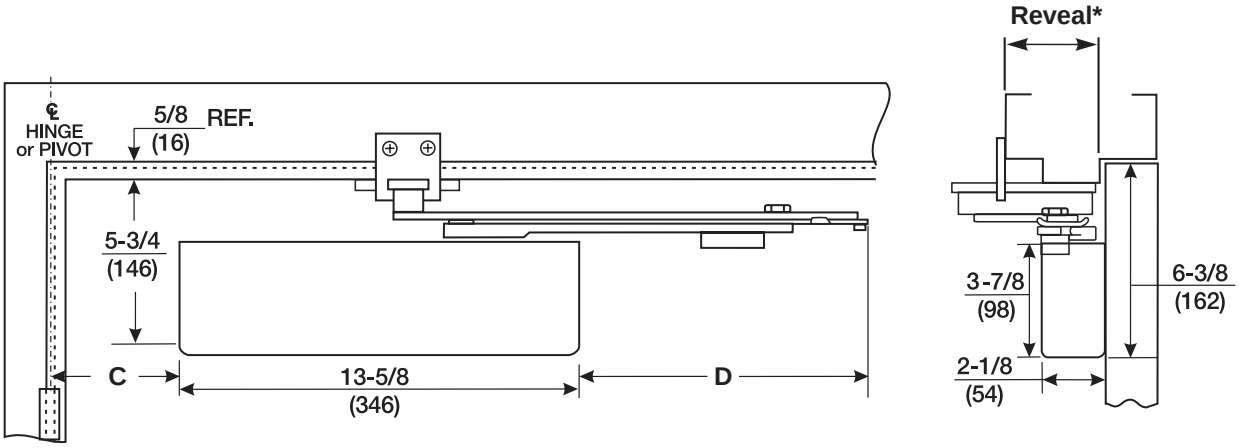

Mounting holes for closer body are spaced 2-3/8" (86mm) vertically x 6-3/4" (171mm) horizontally.
Door width must be specified when ordering.
* Reveals 1-7/8" to 4-5/8" (48mm to 117 mm) standard, uses 6190 bracket.
Reveals in excess of 4-5/8" (117mm) requires use of 6191 reinforcing kit.
Reveals to 1/8" (3mm) requires use of 589L angle bracket.

Door Width Inches (cm)	Dimensional Information Shown in Inches (mm)						
	C Template Position for Hold Open at Listed Angle or Dead Stop at listed Angle Plus 5°						D Arm Extension Beyond Closer
	85°	90°	95°	100°	105°	110°	
28-32" (71-81)	4" (102)	3-3/8" (86)	2-7/8" (73)	2-1/2" (64)	2-1/8" (54)	1-3/4" (44)	8-5/8" (219)
33-41" (84-104)	6-3/8" (162)	5-3/4" (146)	5-1/8" (130)	4-5/8" (117)	4-1/8" (105)	3-3/4" (95)	10-1/8" (257)
42-48" (107-122)	8-5/8" (219)	7-7/8" (200)	7-1/4" (184)	6-5/8" (168)	6-1/8" (156)	5-5/8" (143)	11-1/2" (292)

Maximum Door Width					
Inches (cm)		Sized Closer		Multi-Sized Closer	
		Non-Hold Open	Hold Open	Non-Hold Open	Hold Open
Interior	Exterior	Model Number			
30" (76)		UNI402	UNI1402	UNI4400	UNI4410
36" (91)	30" (76)	UNI403	UNI1403		
42" (107)	36" (91)	UNI404	UNI1404		
48" (122)	42" (107)	UNI405	UNI1405		
	48" (122)	UNI406	UNI1406		

Note: 4400 door closers can be adjusted for door sizes noted. All multi-size door closers are set at mid power range from the factory.

UNI STOP™ TOP JAMB ARM

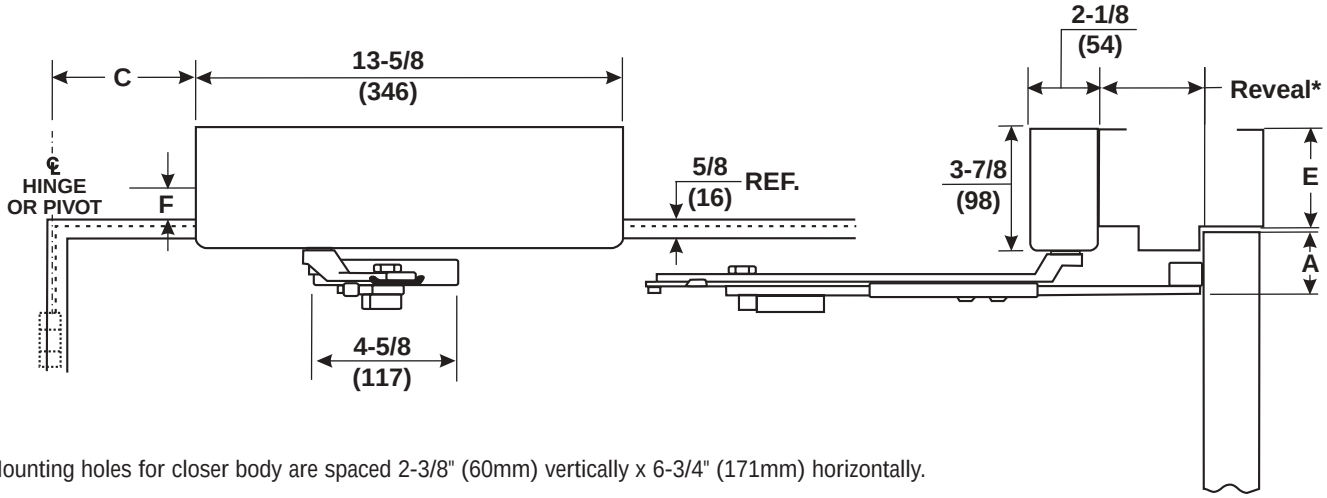

Mounting holes for closer body are spaced 2-3/8" (60mm) vertically x 6-3/4" (171mm) horizontally.

* Reveals up to a maximum of 7-3/8" (187mm).

Reveal must be specified when ordering

Dimensional Information Shown in Inches (mm)											
F[1] Minimum Frame Face		E Minimum Ceiling Clearance		A Minimum Top Rail Clearance		C Template Position for Hold Open at Listed Angle or Hold Open at Listed Angle Plus 5°					
WITH 486 BACK PLATE	WITH 487 BACK PLATE	WITH 486 BACK PLATE	WITH 487 BACK PLATE	WITH 486 BACK PLATE	WITH 487 BACK PLATE	85°	90°	95°	100°	105°	110°
1-5/8" (41)	1-7/8" (48)	3-1/8" (79)	1-7/8" (48)	2-1/4" (57)	3-1/2" (89)	9-1/8" (232)	8-1/2" (216)	7-7/8" (200)	7-3/8" (187)	7" (178)	6-5/8" (168)

1. 486 backplate supplied standard with closer

Maximum Door Width					
Inches (cm)		Sized Closer		Multi-Sized Closer	
		Non-Hold Open	Hold Open	Non-Hold Open	Hold Open
Interior	Exterior	Model Number			
34" (86)		UNIJ402	UNIJ1402	UNIJ4400	UNIJ4410
42" (107)	34" (86)	UNIJ403	UNIJ1403		
48" (122)	42" (107)	UNIJ404	UNIJ1404		
54" (137)	48" (122)	UNIJ405	UNIJ1405		
	54" (137)	UNIJ406	UNIJ1406		

Note: 4400 door closers can be adjusted for door sizes noted. Multi-size door closers are set at mid power range from the factory.

PULL SIDE SLIDE TRACK

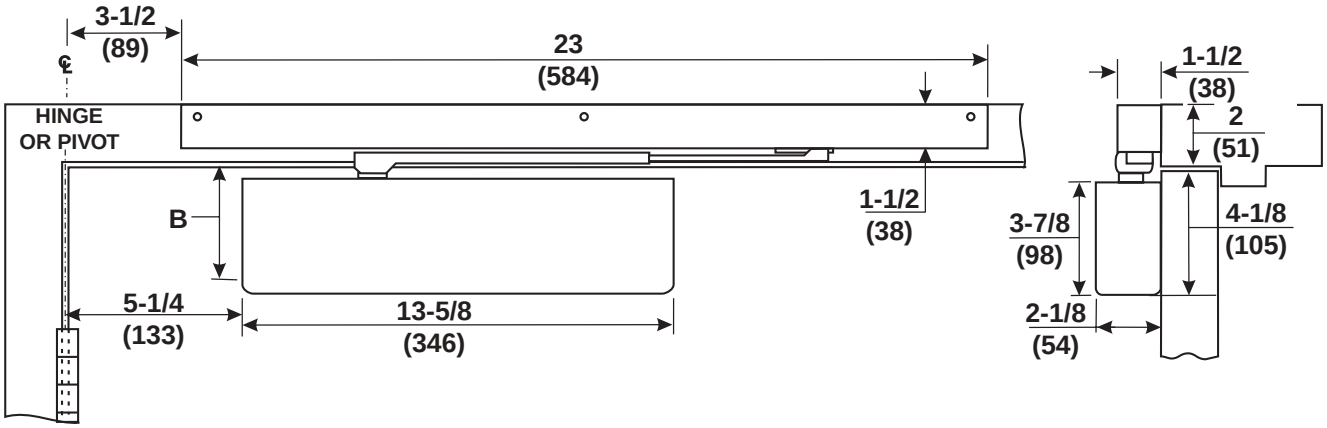

Mounting holes for closer body are spaced 2-3/8" (86mm) vertically x 6-3/4" (171mm) horizontally.

B Minimum top rail of door with frame stop	
Without drop plate	**With 486 drop plate**
3-1/2" (111mm)	2-5/8" (67mm)

Max. Door Width Inches (cm)		Model Number					
		Sized Closer			Multi-Sized Closer		
		Non-Hold Open		Hold Open 85°-100°	Non-Hold Open		Hold Open 85°-100°
Interior	Exterior	85°-100°	85°-180°		85°-100°	85°-180°	
32" (81)	—	404ST	404ST-180	1404ST	4400ST	4400ST-180	4410ST
38" (97)	32" (81)	405ST	405ST-180	1405ST			
48" (122)	38" (97)	406ST	406ST-180	1406ST			

Note: 4400 door closers can be adjusted for door sizes noted. Multi-size closers are set at mid power range from the factory.

PUSH SIDE SLIDE TRACK

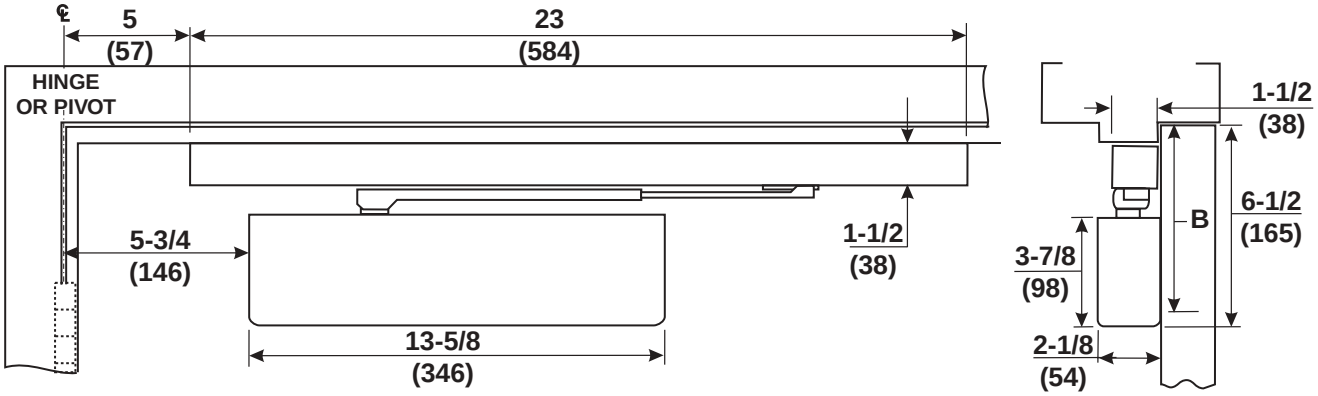

Mounting holes for closer body are spaced 2-3/8" (86mm) vertically x 6-3/4" (171mm) horizontally.

B Minimum top rail of door with frame stop	
Without drop plate	**With 486 drop plate**
6" (152mm)	2-5/8" (67mm)

Max. Door Width Inches (cm)		Model Number			
		Sized Closer		Multi-Sized Closer	
Interior	**Exterior**	**Non-Hold Open 85°-100°**	**Hold Open 85°-100°**	**Non-Hold Open 85°-100°**	**Hold Open 85°-100°**
32" (81)	—	P404ST	P1404ST	P4400ST	P4410ST
38" (97)	32" (81)	P405ST	P1405ST		
48" (122)	38" (97)	P406ST	P1406ST		

Note: 4400 door closers can be adjusted for door sizes noted. Multi-size closers are set at mid power range from the factory.

LOW PROFILE PULL SIDE SLIDE TRACK

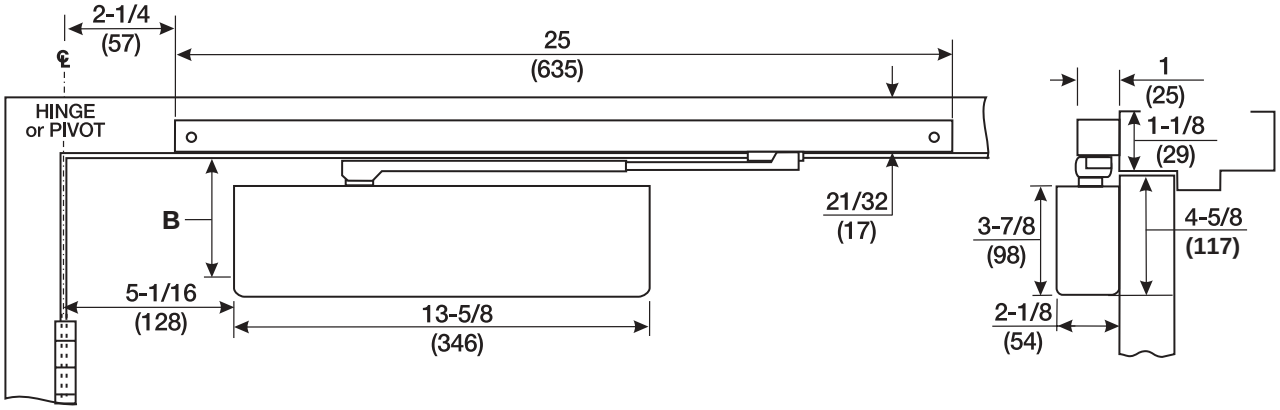

Mounting holes for closer body are spaced 2-3/8" (60mm) vertically x 6-3/4" (171mm) horizontally.

B Minimum top rail of door with frame stop	
Without drop plate	**With 486 drop plate**
3-1/2" (89mm)	2" (51mm)

Max. Door Width Inches (cm)				
Interior	**Sized Closers**		**Multi-Sized Closers**	
	Non-Hold Open	**Hold Open**	**Non-Hold Open**	**Hold Open**
	Model Number			
32" (81)	P444ST	P454ST	P4440ST	P4450ST
38" (97)	P445ST	P455ST		
48" (122)	P446ST	P456ST		

Note: 4400 door closers can be adjusted for door sizes noted. Multi-size closers are set at mid power range from the factory.

LOW PROFILE PUSH SIDE SLIDE TRACK

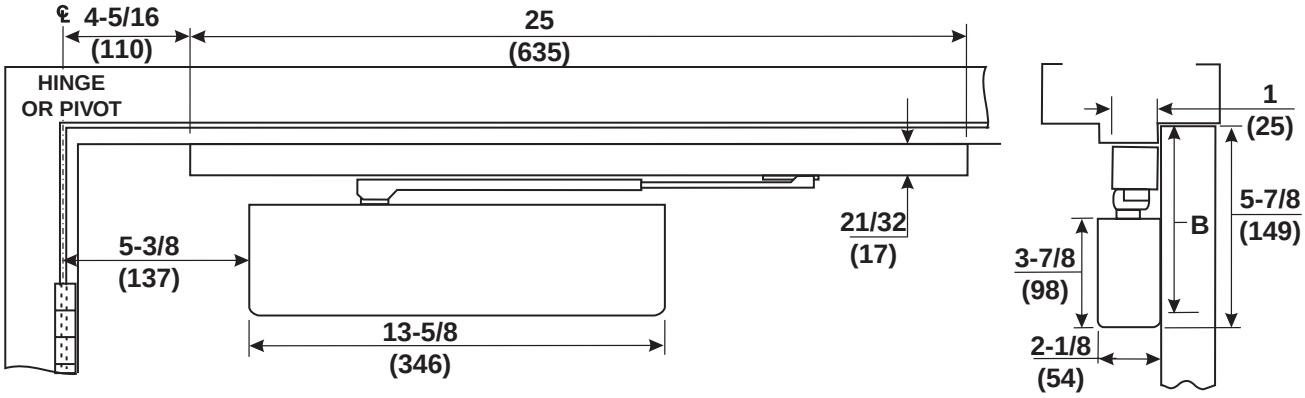

Mounting holes for closer body are spaced 2-3/8" (60mm) vertically x 6-3/4" (171mm) horizontally.

B Minimum top rail of door with frame stop	
Without drop plate	**With 486 drop plate**
5-1/4" (133mm)	3-5/8" (92mm)

Max. Door Width Inches (cm)				
Interior	**Sized Closers**		**Multi-Sized Closers**	
	Non-Hold Open	**Hold Open**	**Non-Hold Open**	**Hold Open**
	Model Number			
32" (81)	444ST	454ST	4440ST	4450ST
38" (97)	445ST	455ST		
48" (122)	446ST	456ST		

Note: 4400 door closers can be adjusted for door sizes noted. Multi-size closers are set at mid power range from the factory.

POCKET DOOR 406STP

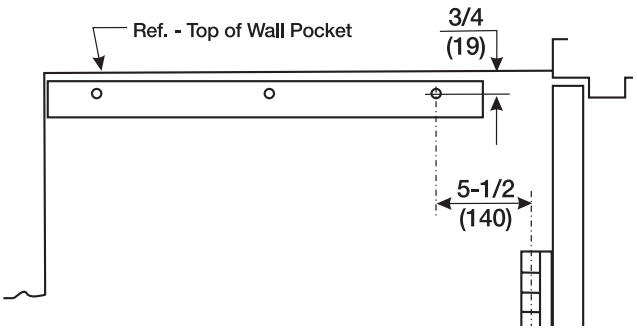

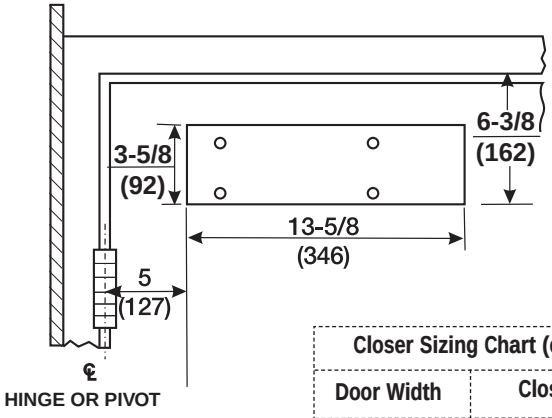

Closer Sizing Chart (cm)	
Door Width	**Closer**
42" (107)	406STP
48" (122)	406EP-STP

IMPORTANT
Wall Reinforcement (by others)
Must Be Sufficient to Withstand Door Action

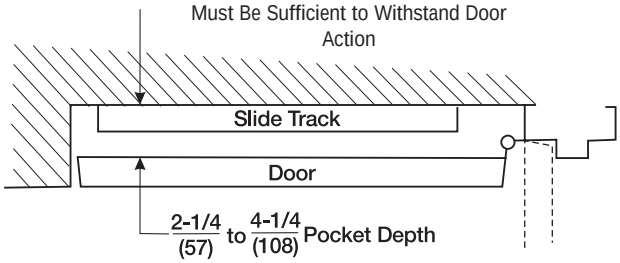

406STP or 406EP-STP Series Closers
Slide Track Closer for 90° Wall Pocket Installation
For Pocket Depths 2-1/4" to 4-1/4" (57mm to 108mm)
(See Chart for Closer Sizing)

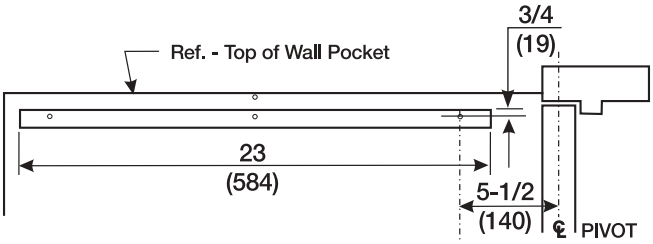

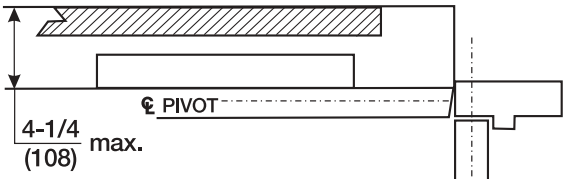

IMPORTANT
Wall Reinforcement (by others)
Must Be Sufficient to Withstand Door Action

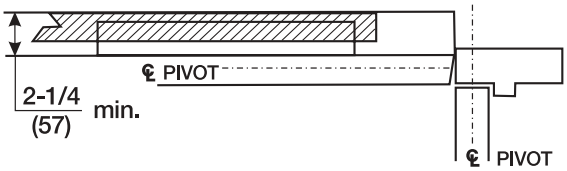

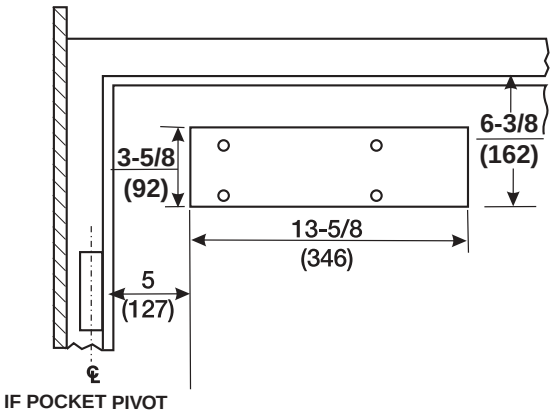

See chart (above) for closer sizing.

REGULAR ARM

CLOSER MOUNTING PLATE

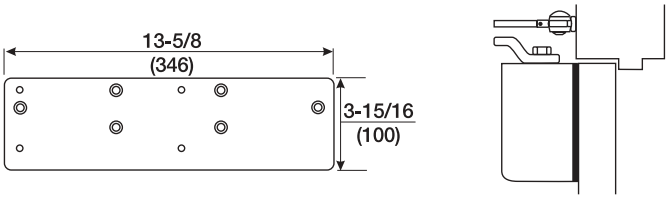

Narrow Top Rail - #486 Drop Plate: For use where the narrow top rail of the door prevents the closer from being mounted directly to the door surface. This drop plate must be used for closer mounted on a top rail between 1-7/8" and 3-3/8" (48mm and 86mm) in height.

BRACKETS FOR NON-HOLD OPEN ARMS

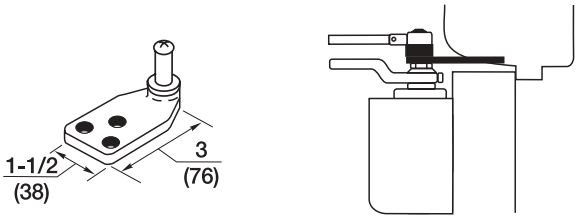

Molded/Bull Nose Trim - #291: For use where the door frame has molded or bull nose trim which will not accept a standard non-hold open shoe. The bracket is mortised into the frame rabbet, and projects beyond the face of the frame. It will accommodate a frame rabbet up to 2" (51mm) deep.

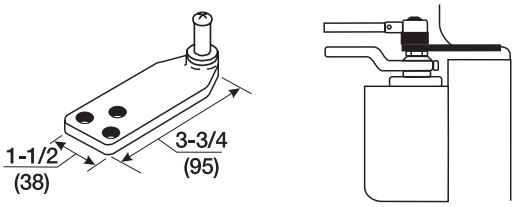

Molded/Bull Nose Trim - #291A Bracket: This bracket is similar to - but longer than - the 291 bracket. It is designed to accommodate frame rabbets from 2" to 2-7/8" (51mm to 73mm) deep.

BRACKETS FOR HOLD OPEN ARMS

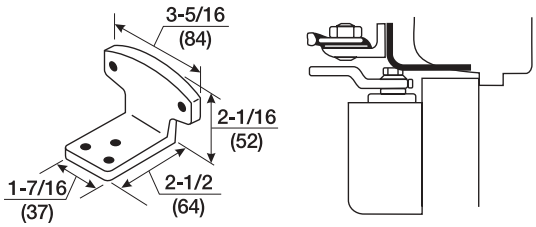

Molded/Bull Nose Trim - #292 Bracket: For use where the door frame has molded or bull nose trim which will not accept a standard hold open shoe. It is mortised into the frame rabbet, and projects beyond the face of the frame. It will accommodate a rabbet up to 2" (51mm) deep. This bracket is used in combination with the standard hold open mounting shoe.

REGULAR ARM

CORNER BRACKETS FOR CLOSER MOUNTING

For closer sizing information use the Parallel Arm Sizing Chart on page 13. The use of a corner bracket requires a door closer of the opposite hand from that of the door when ordering handed closers.

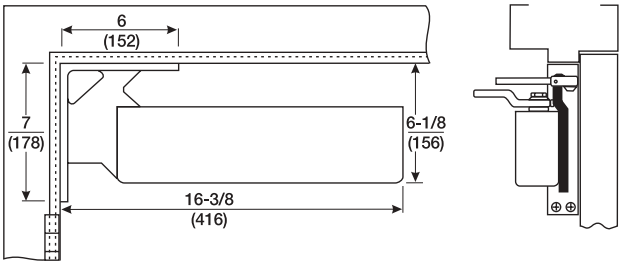

Mounting Opposite Hinge Side - #498 Standard Drop Corner Bracket: For use where it is desired to mount a regular arm non-hold open closer.

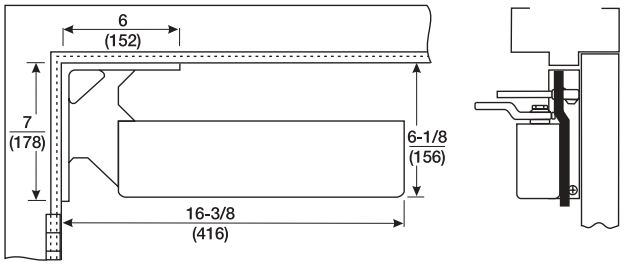

Extra-Drop Mounting Opposite Hinge Side - #2498 Corner Bracket: For use where it is desired to mount a regular arm hold open closer, or where it is necessary for a regular arm non-hold open closer to clear a separate overhead door holder. This bracket drops the closer 1-1/8" (29mm) lower than the 498 Corner Bracket.

TOP JAMB

CLOSER MOUNTING PLATES

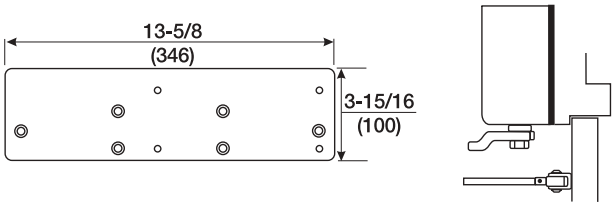

Narrow Frame - #486 Back Plate: For use where a narrow frame face prevents the closer from being mounted directly to the frame. This back plate must be used for closer mounted on a frame between 1-7/8" and 3-1/8" (48mm and 79mm) in height.

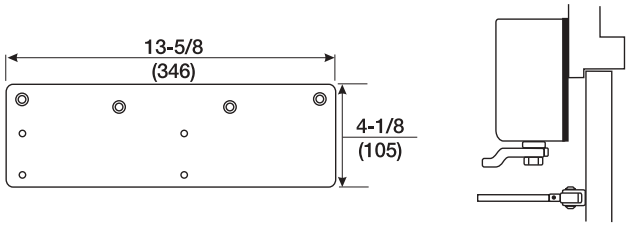

Low Ceiling Clearance - Overhead Door Holder - #487 Drop Plate: For use where the ceiling clearance is between 1-7/8" and 3-7/8" (48mm and 98mm) or where a surface or concealed overhead door holder prevents normal top jamb mounting. This plate drops the closer and allows the arm mounting screws to clear the bottom of the door holder. This places the centerline of the arm mounting screws at 3-1/8" (79mm) from the top of the door.

PARALLEL ARM

CLOSER MOUNTING PLATE

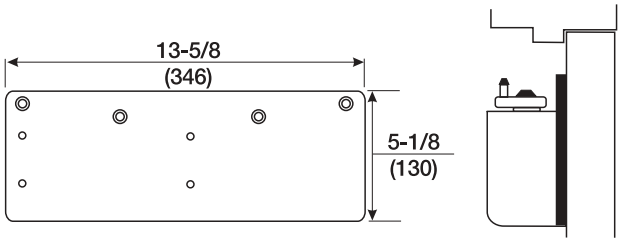

Narrow Top Rail - #488 Drop Plate: For use where a narrow top rail prevents the closer from being mounted directly to the door surface. This drop plate can be used to mount a closer on a top rail as narrow as 2-1/2" (64mm) in height.

BRACKETS FOR NON-HOLD OPEN ARMS

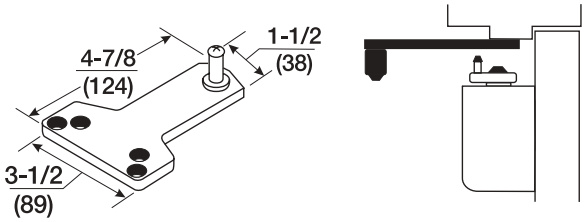

Standard Installation - #289A Soffit Plate: This soffit plate is supplied standard with parallel arm closers. It can be mounted where the frame soffit is as narrow as 1" (25 mm). Specify 289A-SS for stainless steel soffit plate.

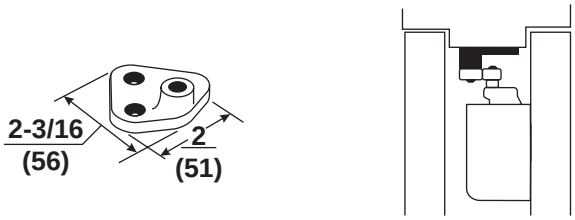

Mounting Between Doors - #413A Soffit Bracket: For use where insufficient space between companion doors does not permit use of other soffit plates. This bracket permits mounting of the closer between doors with as little as 3" (76mm) of header space. Permits closer arm to clear up to 5/8" (16mm) high stop.

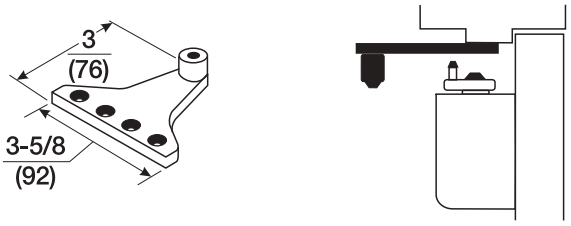

Narrow Frame/Removable Stop - #297 Soffit Plate: For use where a narrow frame or frame with removable stop does not permit use of the standard soffit plate. This soffit plate may be mounted on the frame soffit or the frame rabbet where the stop does not exceed 5/8" (16mm) in height. All of the screw holes are in a straight line, requiring as little as 1-1/4" (32mm) of frame reveal to mount bracket and maintain good closer arm geometry. Where the frame soffit is as wide as 2" (51mm), this soffit plate may be used to clear weather-stripping that is up to 1-3/8" (35mm) wide and 5/8" (16mm) in height.

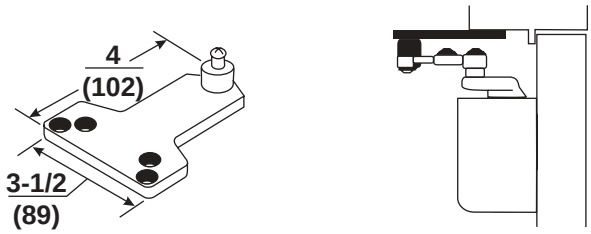

Blade / Applied Stop - #299 Soffit Plate: For use where a blade or applied stop does not permit installation of the standard soffit plate. Mounts to either the frame soffit or rabbet. Since this soffit plate projects 7/8" (22mm) less than a standard soffit plate, it requires a minimum frame reveal of 1-1/2" (38mm). Permits closer to clear up to a 5/8" (16mm) stop.

PARALLEL ARM

BRACKETS FOR NON-HOLD OPEN ARMS (CONTINUED)

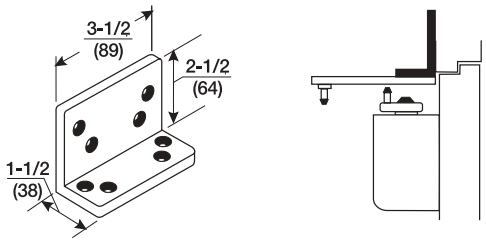

Flush Transom - #589L Angle Bracket: For use where rabbeted or flush transom conditions prevent installation of a soffit plate. Used in combination with the 1618 soffit plate, or may be used in combination with the 2018S soffit plate when it is necessary for the closer arm to clear a separate overhead door holder.

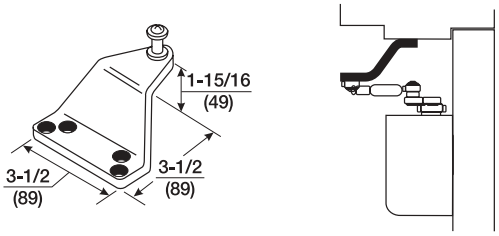

Extra-clearance - #290 Offset Soffit Plate: For use where the need for additional clearance prevents use of the standard soffit plate. This plate mounts to the frame soffit to provide up to 2" (51mm) of clearance when a separate overhead door holder is used. Standard mounting requires a 2-5/8" (67mm) wide frame soffit. It may also be used where unusually high frame stops or weather-stripping prevent the use of other soffit plates.

BRACKETS FOR HOLD OPEN ARMS

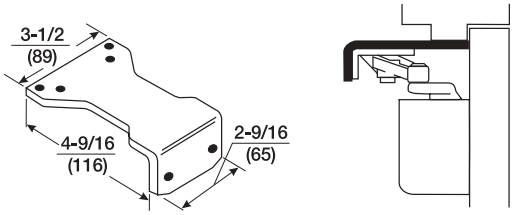

Parallel Hold Open - #588 Adapter Plate: This Adapter Plate is supplied standard with all parallel arm hold open closers. It can also be used to convert regular arm or top jamb hold open arms to parallel arm installation. It can be mounted where the frame soffit is as narrow as 1" (25mm).

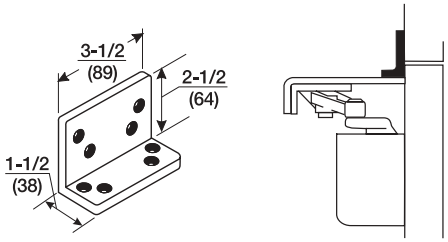

Flush Transom Hold Open - #589L Angle Bracket: For use where rabbeted or flush transom conditions prevent installation of the standard 588 hold open adapter plate. It is used in combination with the 588 adapter plate.

RIGID PARALLEL ARM

CLOSER MOUNTING PLATE

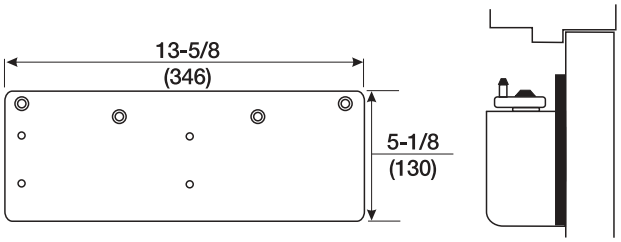

Narrow Top Rail - #488 Drop Plate: For use where a narrow top rail prevents the closer from being mounted directly to the door surface. This drop plate can be used to mount a closer on a top rail as narrow as 2-1/2" (64mm) in height.

BRACKETS FOR NON-HOLD OPEN ARMS & HOLD OPEN ARMS

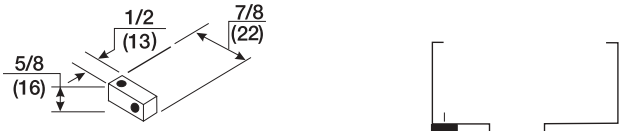

Standard - #293S Spacer Block: For use where a narrow frame soffit does not provide adequate support for the soffit plate. Supplied as standard with all parallel rigid arm closers.

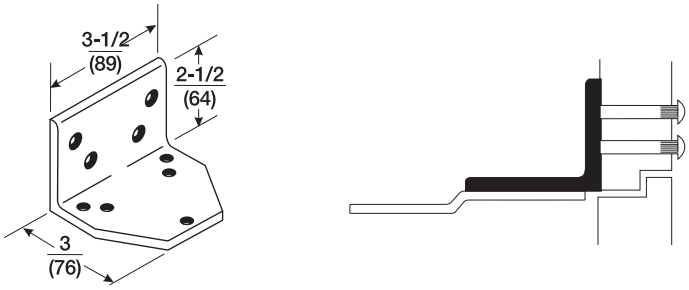

Flush Rabbeted Transom - #293L Angle Bracket: For use where flush transom conditions prevent mounting of the standard soffit plate. This bracket is used in combination with the standard soffit plate.

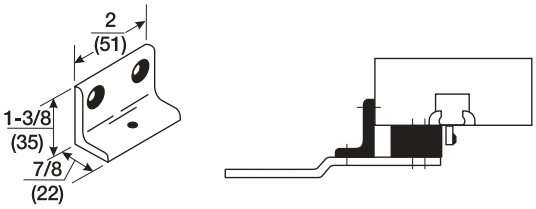

Narrow Frame - #890 Support Bracket: For use where the frame is narrow, and the soffit plate cannot be mounted directly to the frame soffit or rabbet. Used in combination with the #891 Spacer Block on blade stop frames to provide extra support and needed clearance of the blade stop.

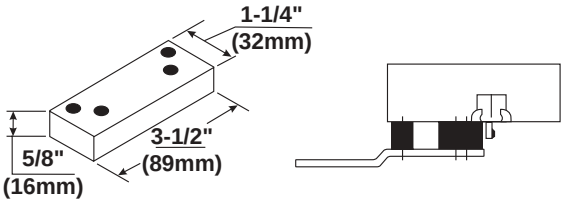

Clearance/Support Blade Stop - #891 Spacer Block: For use where the door frame has a blade stop and the soffit plate must be mounted on the frame rabbet. This accessory is used in combination with the standard Spacer Block to provide clearance of the blade stop.

HOLDER STOP ARMS

CLOSER MOUNTING PLATE

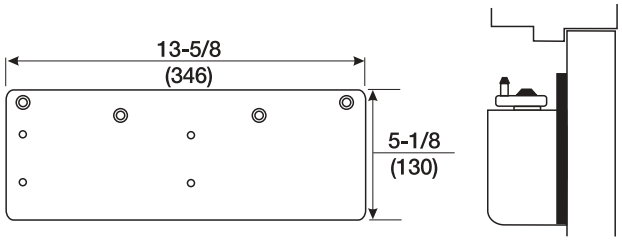

Narrow Top Rail - #488 Drop Plate: For use where a narrow top rail prevents the closer from being mounted directly to the door surface. This drop plate can be used to mount a closer on a top rail as narrow as 2-1/2" (64mm) in height.

BRACKETS FOR NON-HOLD OPEN ARMS & HOLD OPEN ARMS

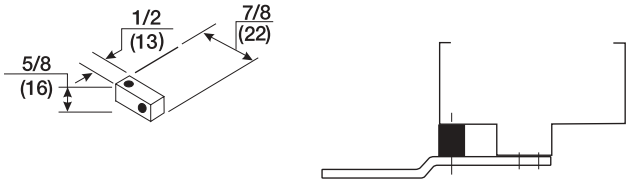

Standard - #293S Spacer Block: For use where a narrow frame soffit does not provide adequate support for the soffit plate. Supplied as standard with all parallel rigid arm closers.

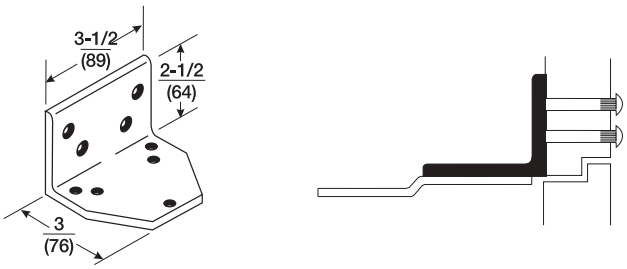

Flush Rabbeted Transom - #293L Angle Bracket: For use where flush transom conditions prevent mounting of the standard soffit plate. This bracket is used in combination with the standard soffit plate.

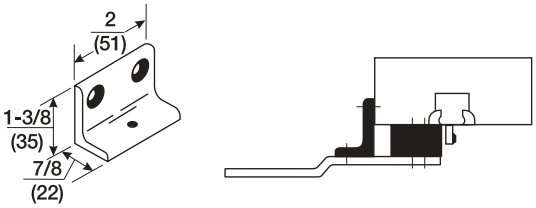

Narrow Frame - #890 Support Bracket: For use where the frame is narrow, and the soffit plate cannot be mounted directly to the frame soffit or rabbet. Used in combination with the #891 Spacer Block on blade stop frames to provide extra support and needed clearance of the blade stop.

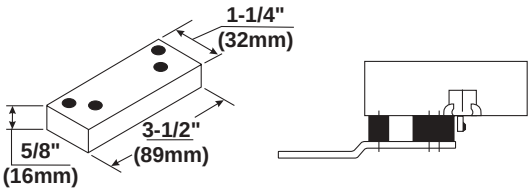

Clearance/Support Blade Stop - #891 Spacer Block: For use where the door frame has a blade stop and the soffit plate must be mounted on the frame rabbet. This accessory is used in combination with the standard Spacer Block to provide clearance of the blade stop.

UNI STOP ARM

CLOSER MOUNTING PLATE (FOR PARALLEL ARM)

Narrow Top Rail - #488 Drop Plate: For use where a narrow top rail prevents the closer from being mounted directly to the door surface. This drop plate can be used to mount a closer on a top rail as narrow as 2-3/8" (60mm) in height.

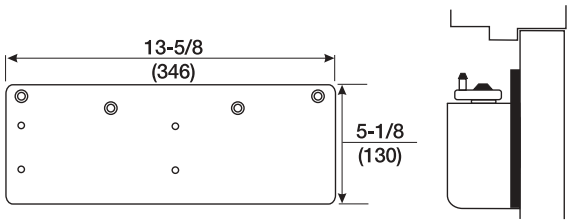

SOFFIT PLATE REINFORCING BRACKETS (FOR PARALLEL ARM)

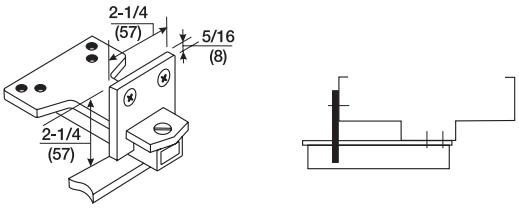

Additional Support - #6190 Reinforcing Bracket: Standard for use with all Parallel Arm Uni Stop Door Controls. Provides additional support to the soffit plate on installations with door frame reveals from 1-7/8" to 4-5/8" (48mm to 117mm).

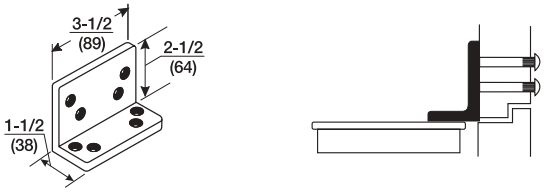

Flush Rabbeted Transom - #589L Angle Bracket: Optional for use with all Parallel Arm Uni Stop Door Controls. For use where rabbeted or flush transom conditions prevent installation of the soffit plate assembly. This bracket fastens to the overhead transom to provide a mounting surface for the soffit plate assembly.

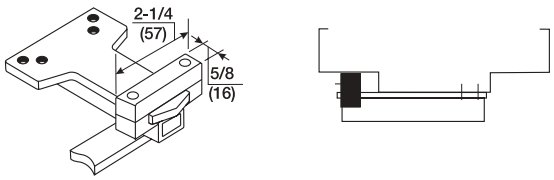

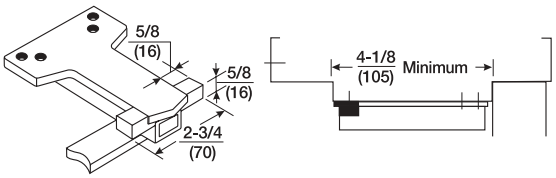

Wide Frame - #6191 Reinforcing Kit: Optional for use with all Parallel Arm Uni Stop Door Controls. Used to support the soffit plate on installations with wide frames. Clamps may be used with or without the spacer block, depending on frame conditions.

CLOSER MOUNTING PLATE (FOR TOP JAMB)

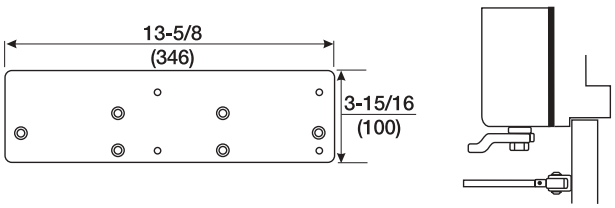

Standard Installation - #486 Back Plate: Can be mounted where a frame face is as narrow as 1-5/8" (41mm) in height.

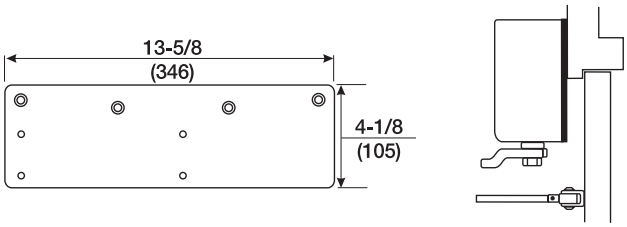

Minimum Ceiling Clearance - #487 Drop Plate: For use where the ceiling clearance is as little as 1-7/8" (48mm).

DOOR CLOSER BODY ASSEMBLIES

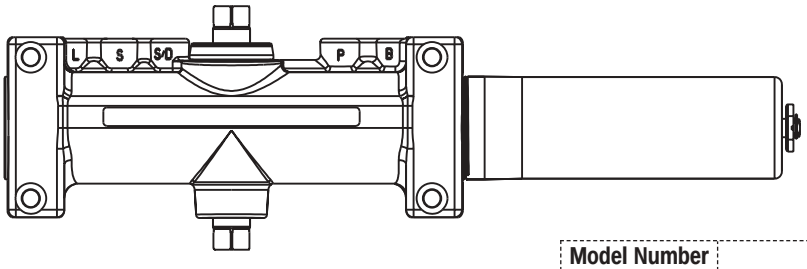

Model Number	Description
4400LAP	Multi Size Closer Body
4400DLLAP	With delayed action
40*LAP	Sized Closer Body
40*DLLAP	With delayed action
406EPLAP	Closer with extra power

* Specify closer size
LAP = Less All Parts

Note: To replace a closer body that has the old metal cover, (mfg. date prior to June 3, 2004) specify 4400M LAP when ordering.

SPECIALTY FASTENERS

STEEL DOOR APPLICATION

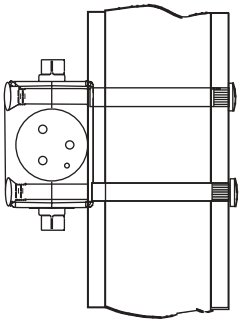

Sex Nut/Sleeve Nut & Screw: "SNB" (4 per pack)

Door Thickness	SN's	SNB's
1-3/8"	SN-138	SNB138-47
1-3/4"	SN-134	SNB134-47
2-1/4"	SN-214	SNB214-47
S.S. SNB'S 1-3/4" (Stainless Steel)	SN-134SS	SNB134SS-47

ALUMINUM AND WOOD DOOR APPLICATION (ALUMINUM DOOR SHOWN)

Sex Nut/Sleeve Nut: "SN" (4 per pack)

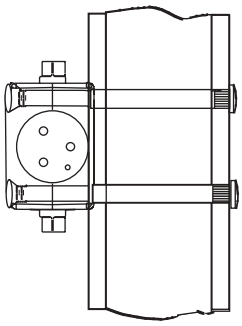

Through-Bolt & Grommet Nut: "TBGN" (4 per pack)

Door Thickness	TBGN's
1-3/8"	TBGN138-47
1-3/4"	TBGN134-47

Torx® Screw Packs	
Arm Type	**400/4400 Series**
Reg., Par. & Top Jamb	TX47
Rigid Parallel, Holder/Stop	PRTX47
Regular Rigid Heavy-Duty Arm	RTX47
Uni Stop Arm	UNITX47

Closer Series	Closer Covers (Material)	Model Number
400 4400 TJ400 TJ4400	Plastic	400P
400 4400	Metal	400M
TJ400 TJ4400	Metal	TJ400M x Hand

NON-HOLD OPEN ARM ASSEMBLIES

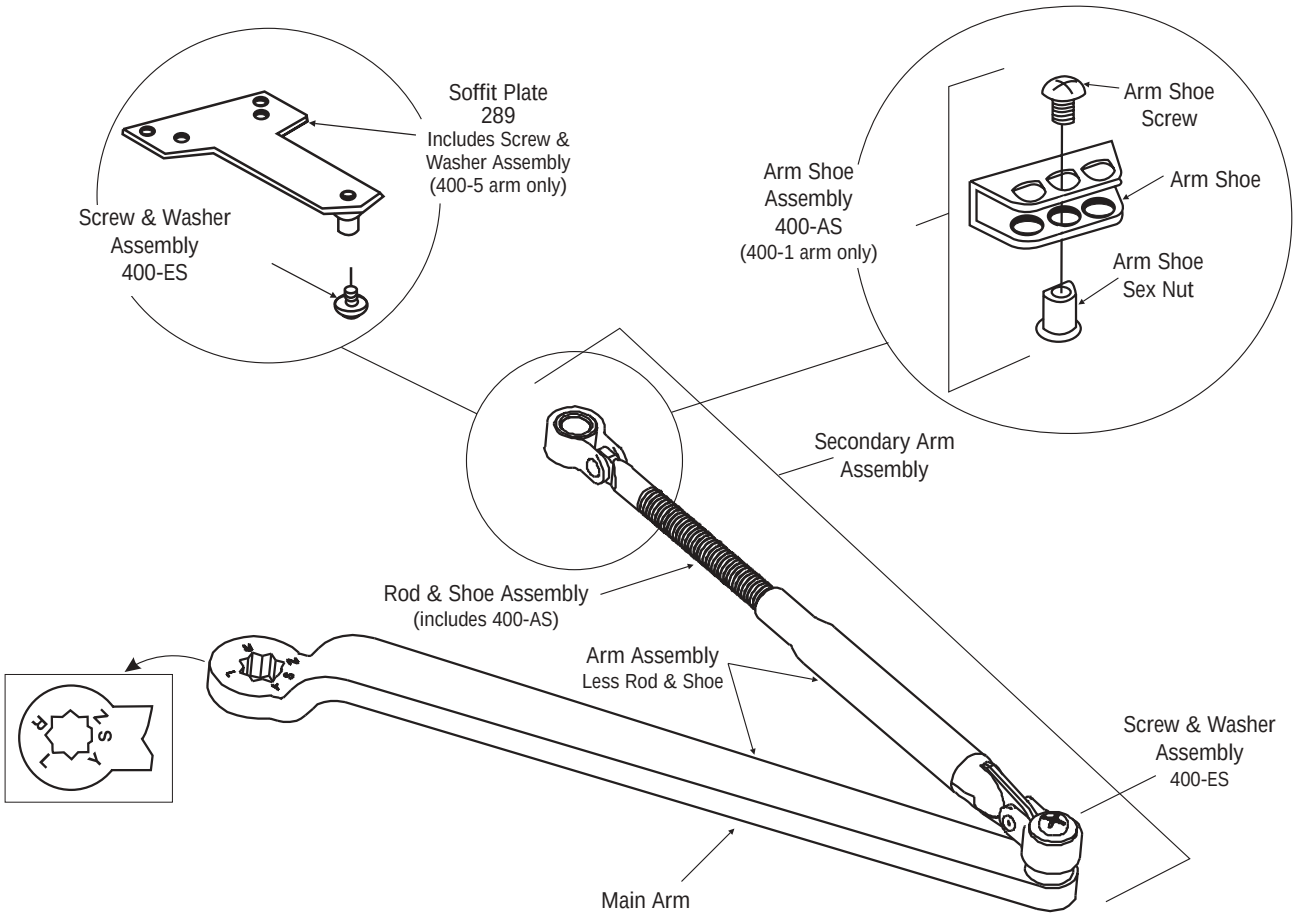

Note: Mounting hardware included with all parts orders.

Closer Series	Complete Arm Assembly	Main Arm Assembly① (length)(mm) (includes 400-ES)	Secondary Arm Assembly (includes 400-ES)	Arm Assembly Less Rod and Shoe	Rod & Shoe Assembly② (length) (mm)
400/4400	400-1	400-1M (11)(279)	400-111	400-1W	400-11 (8-7/8)(225)
TJ400/TJ4400	400-1A		400-121		400-11A (12-9/16)(319)
TJL400/TJL4400	400-1B	400-2M (13-1/2)(343)	400-131	400-2W	400-11B (15-3/16)(386)
PA400/PA4400	400-5	400-1M (11)(279)	400-115		400-15 (8-7/8)(225)
PA400/PA4400③	400-5A		400-115A	400-1W	400-15A (12-9/16)(319)
4400	400-25 (tri pack includes 400-1 plus 289 plate)	① C to C length shown in parentheses. ② C of connecting link to end of rod shown in parentheses. ③ For 180° door swing when using a special template for doors hung on 6" to 8" (152mm to 203mm) wide throw hinges.			

STAINLESS STEEL ARM ASSEMBLIES

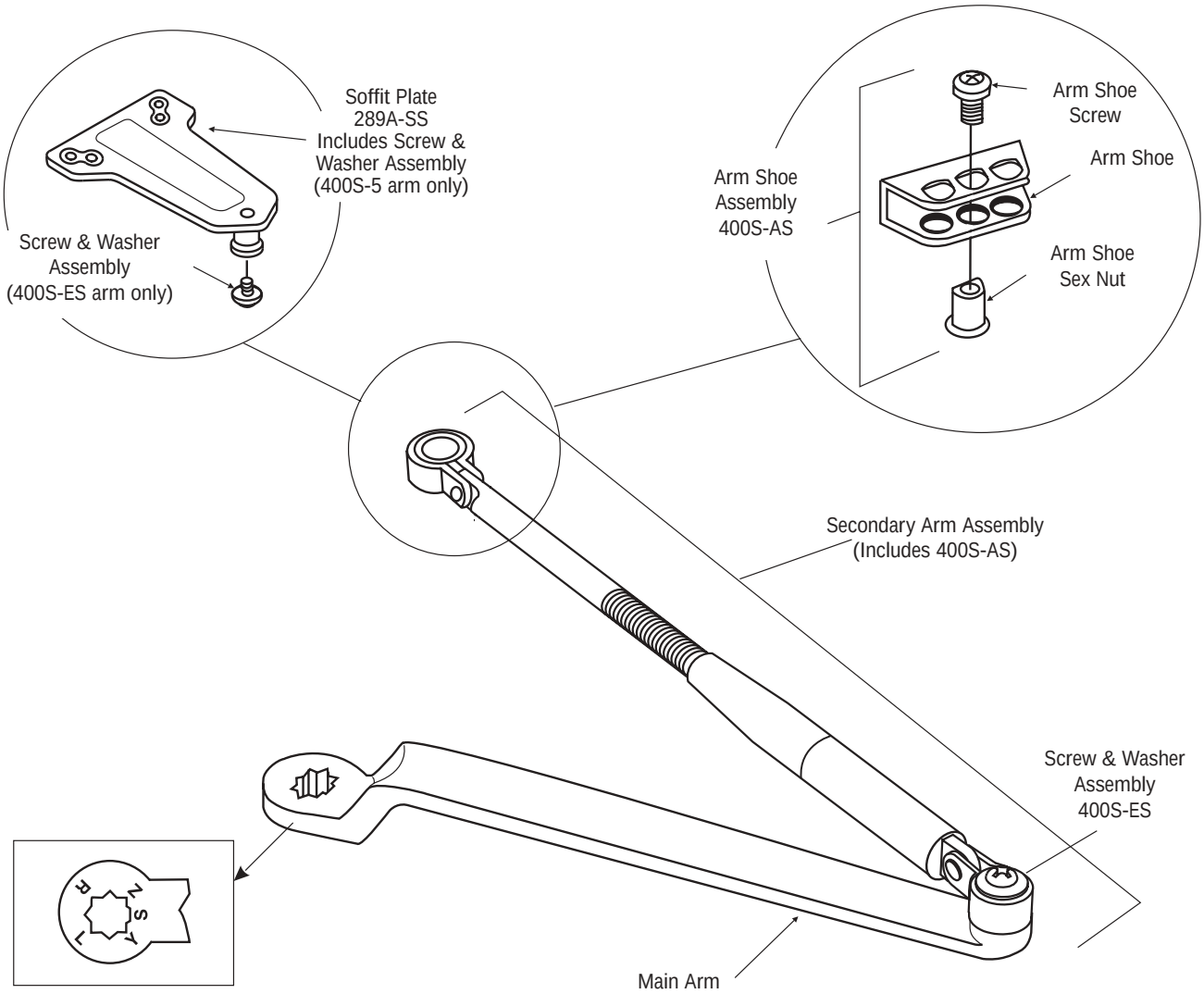

Closer Series	Complete Arm Assembly	Main Arm Assembly① (length)(mm) (includes 400S-ES)	Secondary Arm Assembly (includes 400S-ES)
4400S	400S-1	400S-1M (11)(279)	400S-111
TJ4400S	400S-1A		400S-121
PA4400S	400S-5		400S-115

Note: Mounting hardware included with all parts orders.

① **C to C length shown in parentheses.**

HOLD OPEN ARM ASSEMBLIES

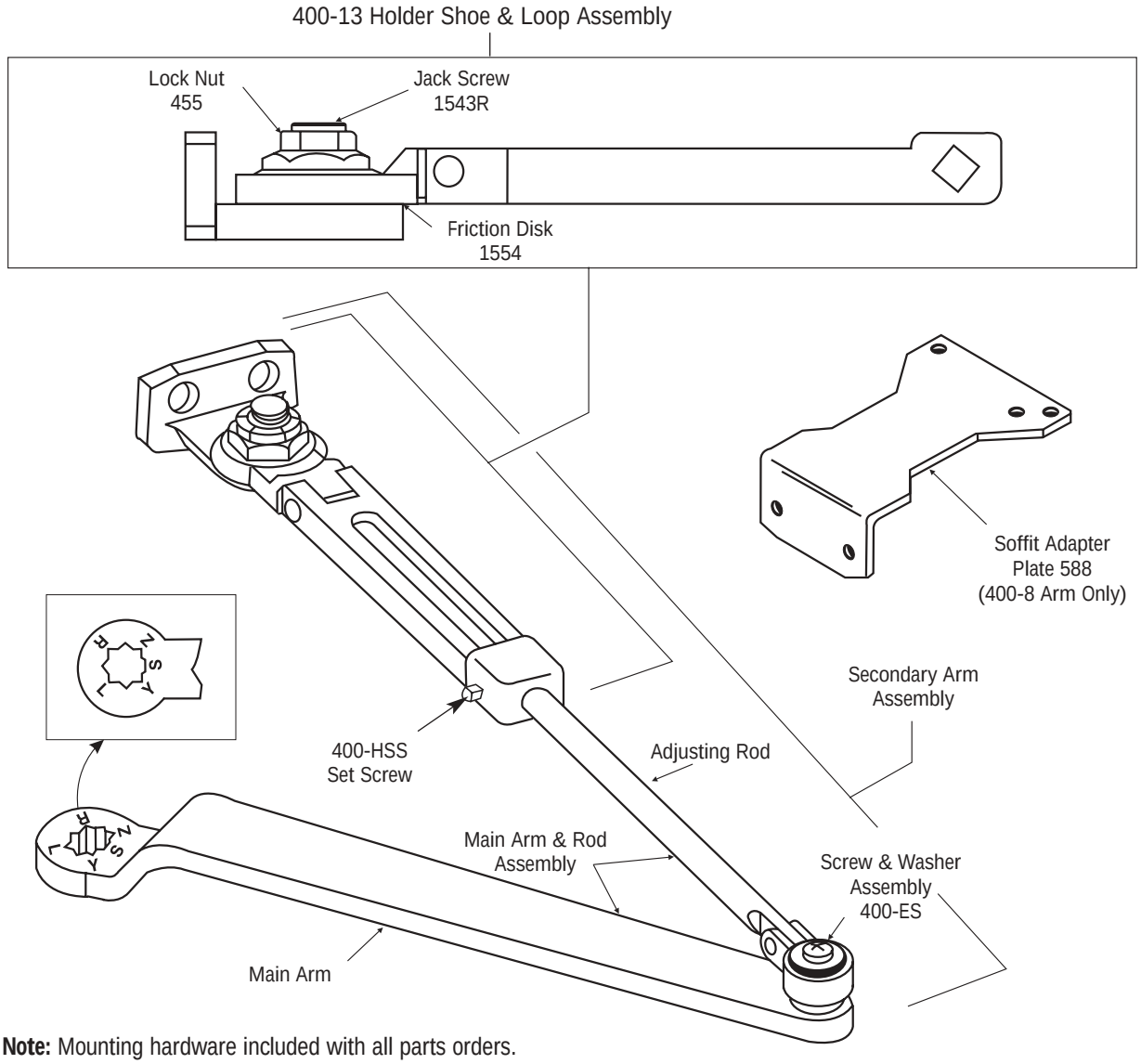

Note: Mounting hardware included with all parts orders.

Closer Series Assembly	Complete Arm Assembly	Main Arm① (Length)(mm) (includes 400-ES)	Secondary Arm (includes 400-ES)	Main Arm & Rod Assembly	Holder Shoe & Loop Assembly	Adjusting Rod② (Length)(mm)
1400/4410	400-3/400-8③	400-1M (11)(279)	400-113/400-118 (Reg.) / (Par.)	400-3W	400-13	400-31 (7-3/8)(187)
TJ1400/TJ4410	400-3A		400-123	400-3WA		400-31A (10-13/16)(275)
TJL1400/TJL4410	400-3B	400-2M (13 -1/2)(343)	400-133	400-3WB		400-31B (12-7/8)(327)

① C to C length shown in parentheses.
② C of connecting link to end of rod shown in parentheses.
③ Same as 400-3 but includes #588 soffit adapter plate.

RIGID PARALLEL ARM ASSEMBLIES

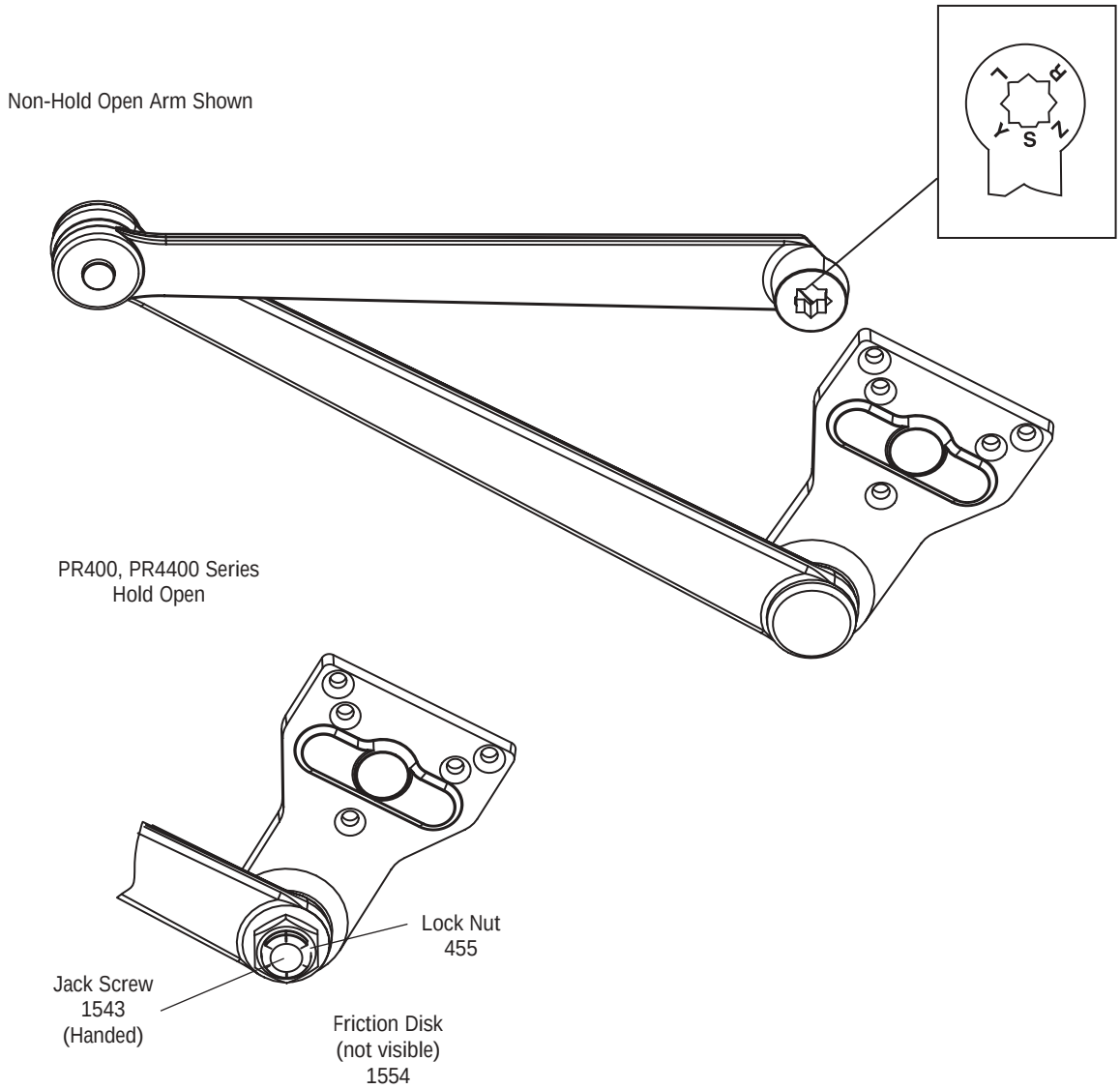

Closer Series PR400/PR4400	Complete Arm Assembly
NHO	PR400-5
HO	PR400-8R (Right Hand)
	PR400-8L (Left Hand)

Note: Mounting hardware included with all parts orders.

HOLDER/STOP ARM ASSEMBLIES

Hold Open Arm Shown

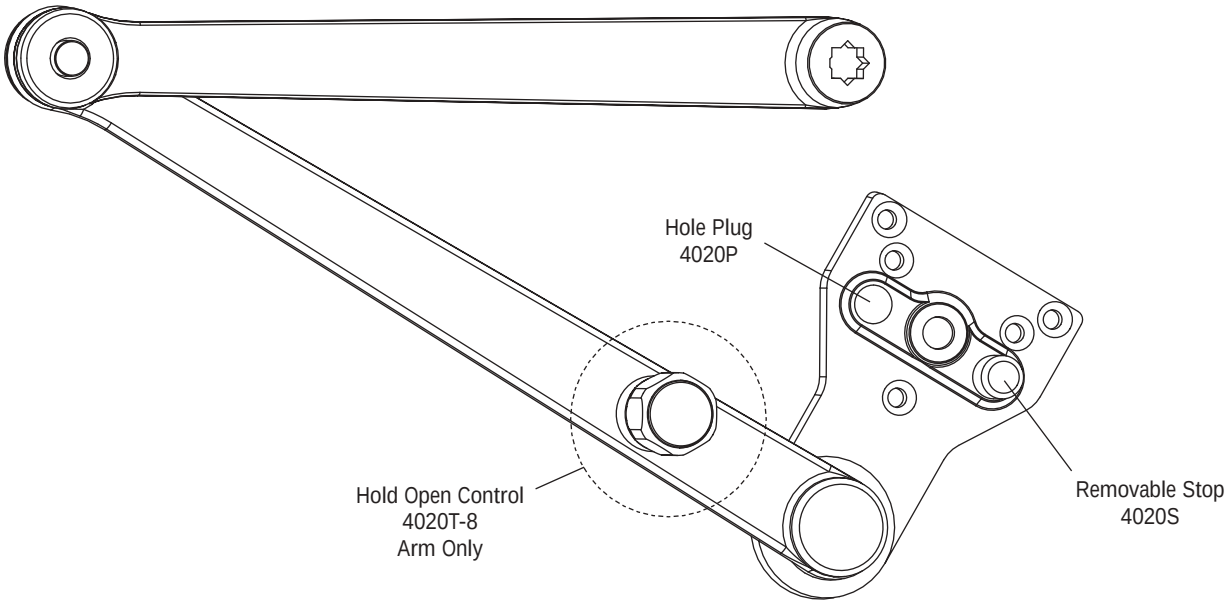

Note: Mounting hardware included with all parts orders.

Closer Series	Arm Function	Complete Arm Package
4020 / 4420	Non-Hold Open	4020-5
4020T / 4420T	Thumbturn Hold Open	4020T-8

REGULAR RIGID HEAVY-DUTY ARM

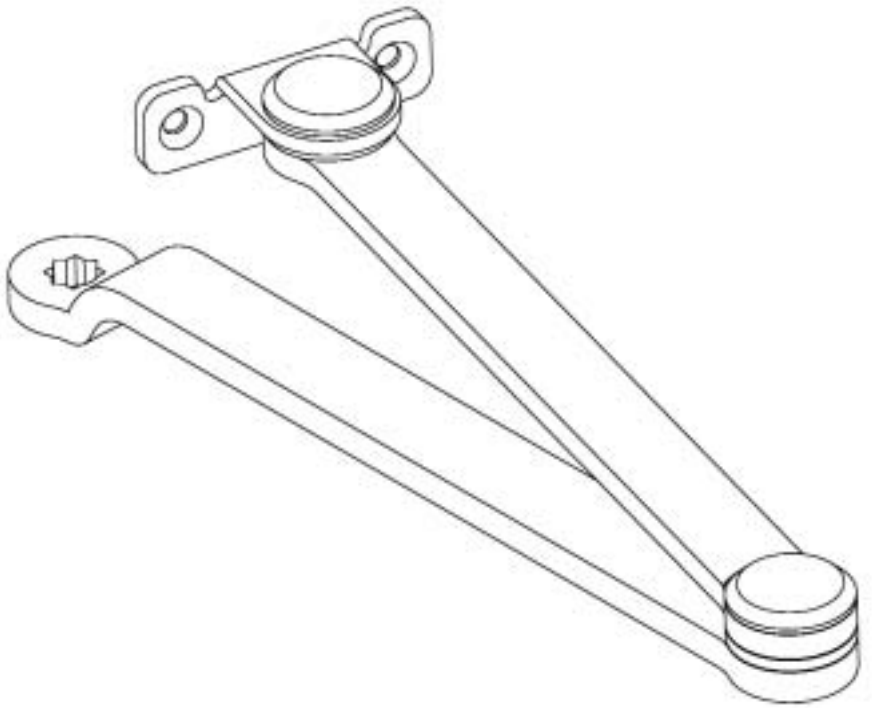

Note: Mounting hardware included with all parts orders.

Closer Series	Arm Function	Complete Arm Package
R400 / R4400	Non-Hold Open	R400-1 Furnished with standard fasteners
SCR400 / SCR4400*		410-1 Furnished with Torx fasteners

*** Refer to Norton's Security Closer Catalog.**

UNI STOP™ ARM ASSEMBLIES

PARALLEL ARM HOLD OPEN & NON-HOLD OPEN SERIES

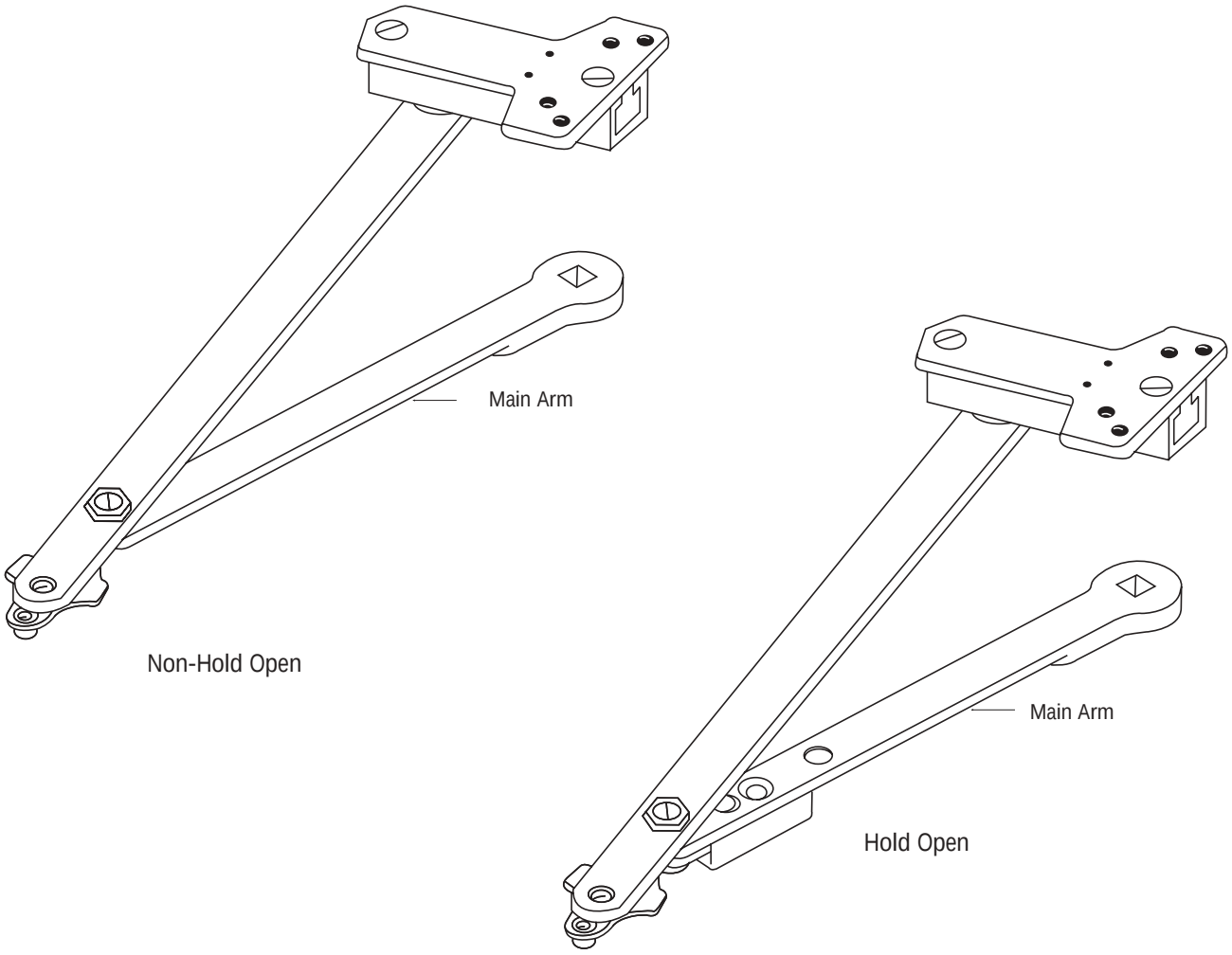

Door Width (cm)	Main Arm Length* (mm)	Complete Arm Assembly	
		Non-Hold Open	Hold Open
28" - 32" (71- 81)	9-1/2" (241)	6100-11	6100-1
33"- 41" (84 - 104)	11" (279)	6100-13	6100-3
42" - 48" (107 - 122)	12-1/2" (318)	6100-14	6100-4

* Center to center length.

Note: Mounting hardware included with all parts orders.

UNI STOP™ ARM ASSEMBLIES

TOP JAMB HOLD OPEN & NON-HOLD OPEN SERIES

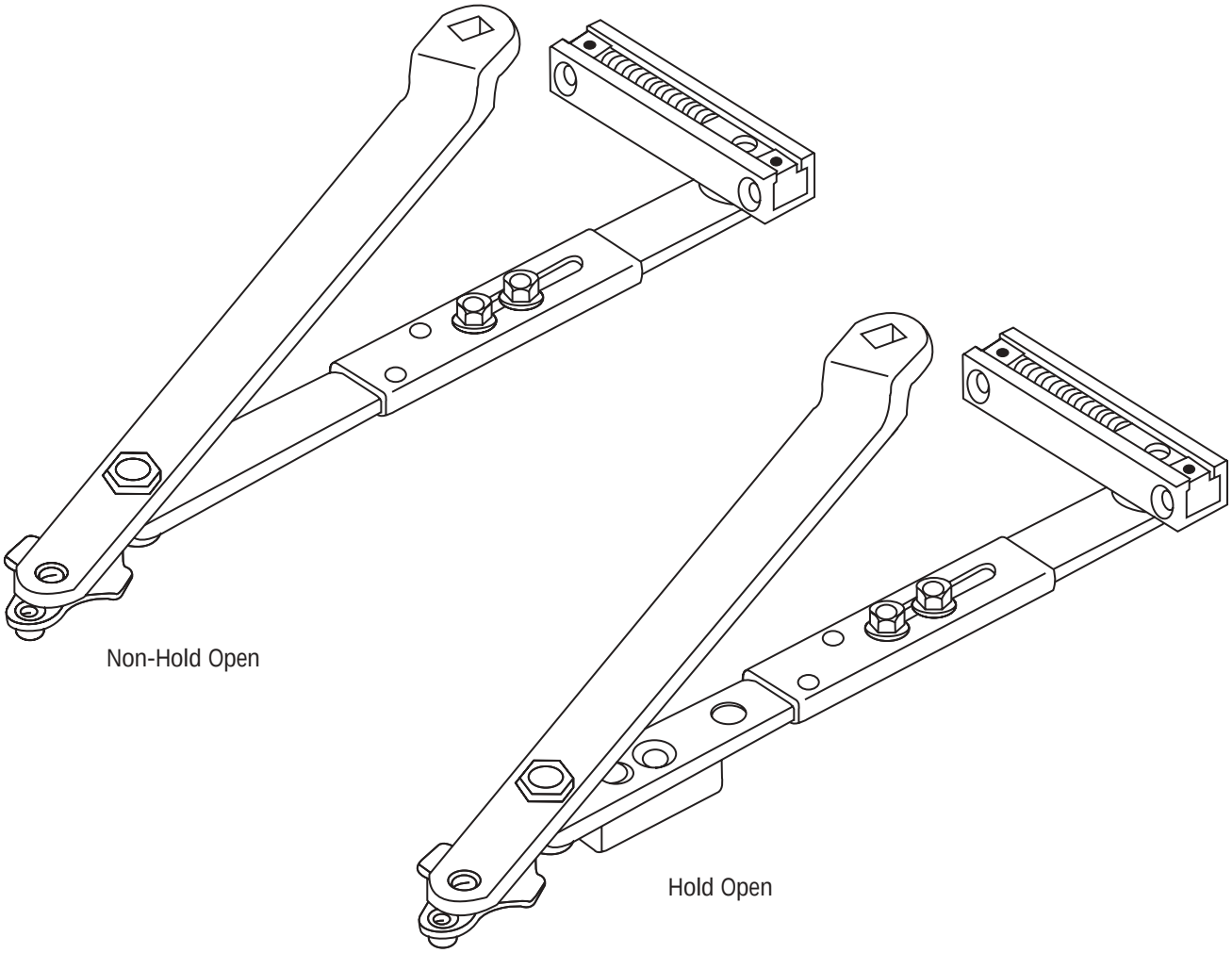

Complete Arm Assembly		For Frame Reveals (mm)
Non-Hold Open	**Hold Open**	
J6100-4	J6100-7	2-1/8" - 3-1/4" (54 - 83)
J6200-4	J6200-7	1/2" - 2" (13 - 51)
J6400-4	J6400-7	3-3/8" - 4-1/4" (86 - 108)
J6500-41	J6500-71	4-3/8" - 5-3/8" (111 - 137)
J6500-42	J6500-72	5-1/2" - 6-3/8" (140 - 162)
J6500-43	J6500-73	6-1/2" - 7-3/8" (165 - 187)
J6600-4	J6600-7	0" - 3/8" (0 - 10)

Note: Mounting hardware included with all parts orders.

LOW PROFILE ARM ASSEMBLIES

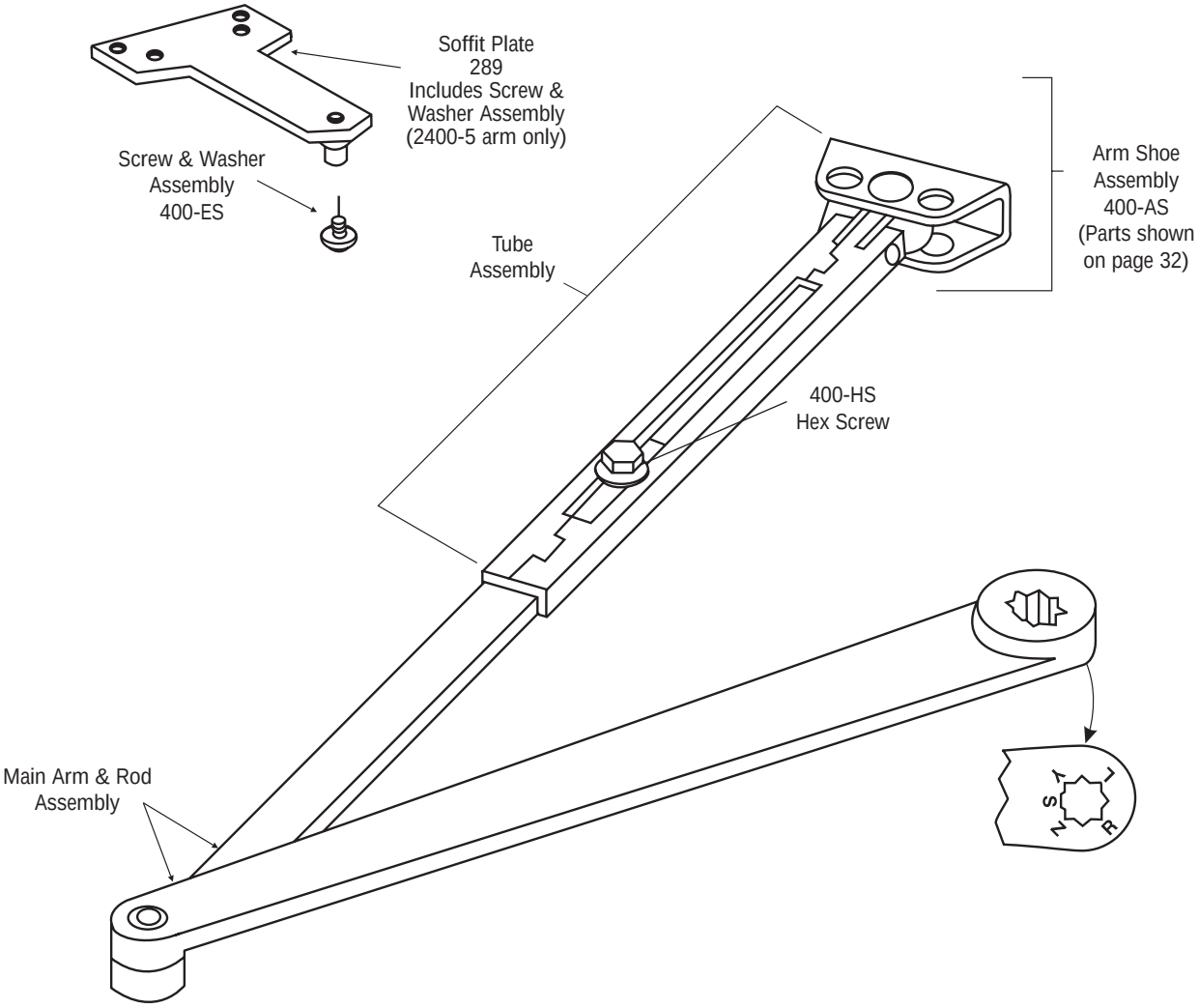

Arm Application	Complete Arm Assembly	Main Arm & Adjusting Rod Assembly	Tube & Shoe/Soffit Soffit Assembly
Regular Arm	2400-1	2400-1MR	2400-1TS (With 400-AS)
Parallel Arm	2400-5		2400-5TS (With 289)
Tri-pack	2400-25		

Note: Mounting hardware included with all parts orders.

TRACK ASSEMBLIES 400/4400ST & STP

Non-Hold Open	
Model	**Slide Track Assembly**
Pull side mounted	400ST-1T
Push side mounted	400ST-5T
Pull side mounted (180°)	400ST-1T180

Hold Open	
Model	**Slide Track Assembly**
Pull side mounted	400ST-3T
Push side mounted	400ST-8T

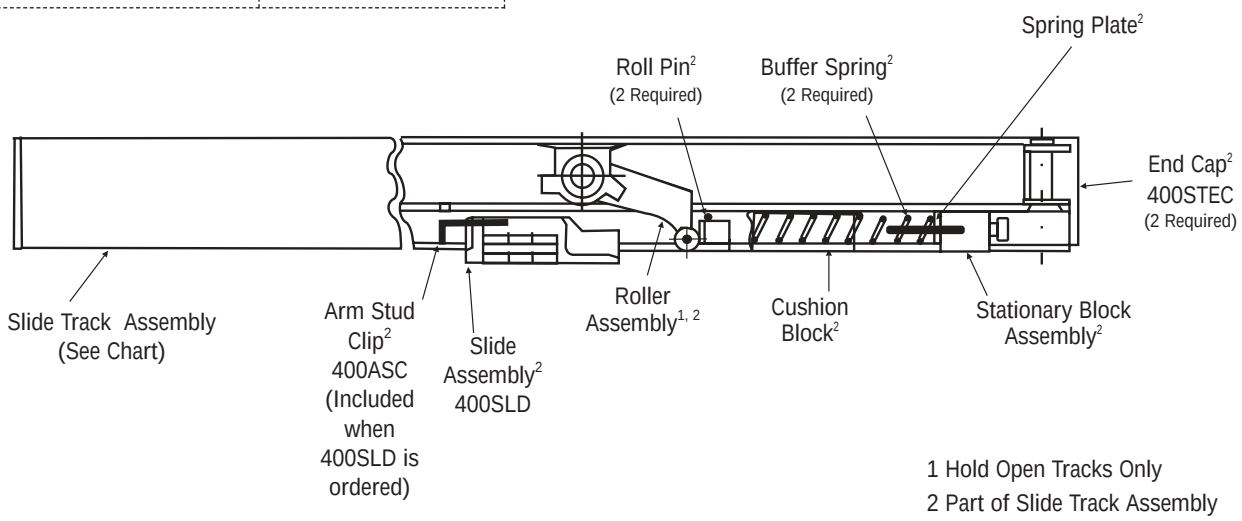

1 Hold Open Tracks Only
2 Part of Slide Track Assembly

Note: Mounting hardware included with all parts orders.

TRACK ASSEMBLIES 400/4400ST & STP

STANDARD ARM ASSEMBLY

400ST-1A[1,2]

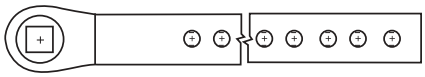

Arm Tube Assembly
400ST-1AT [1]

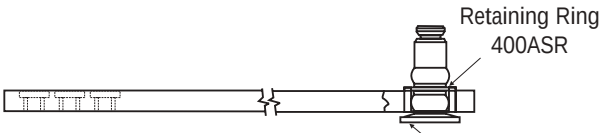

DOUBLE EGRESS ARM ASSEMBLY

400PT-DE-1R (Right Hand)[1, 2]
400PT-DE-1L (Left Hand)[1, 2]

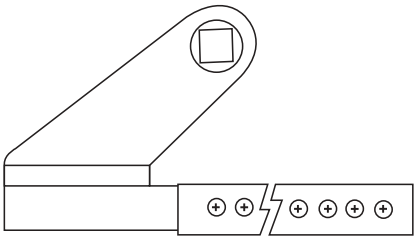

Arm Tube Assembly
400ST-1ATR[1] (right hand)
400ST-1ATL[1] (left hand)

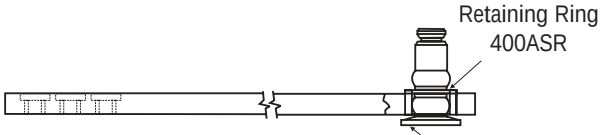

STP ARM ASSEMBLY

400STP-1A[1,2]

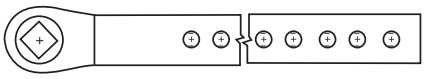

Arm Tube Assembly
400STP-1AT[1]

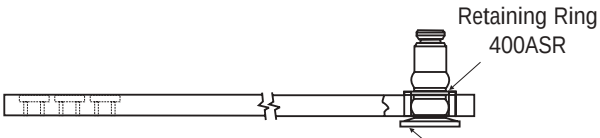

1 Includes arm length adjusting screw #400ALAS
2 Includes arm tube & adjusting rod assembly

Note: Mounting hardware included with all parts orders.

TRACK ASSEMBLIES 440ST/4440ST

Non-Hold Open	
Model	**Slide Track Assembly**
Pull side mounted	440ST-1T
Push side mounted	440ST-5T

Hold Open	
Model	**Slide Track Assembly**
Pull side mounted	440ST-3T
Push side mounted	440ST-8T

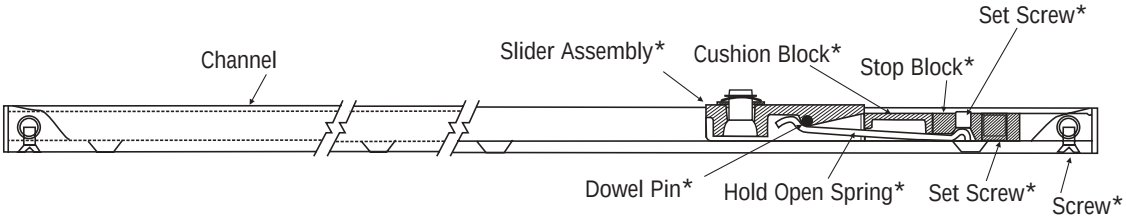

*Part of an Assembly Pack
NHO= 440SLD
HO= 440HSLD

ARM ASSEMBLY

400ST-1A[1, 2]

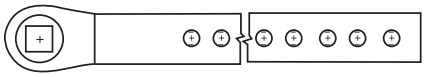

Arm Tube Assembly

4001ST-1AT [2]

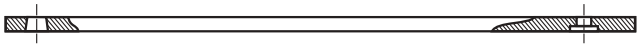

Adjusting Rod Assembly

400ST-1AR [2]

1 Includes arm length adjusting screw
2 Includes arm tube & adjusting rod assembly

Note: Mounting hardware included with all parts orders.

HOW TO ORDER 400 SERIES

PREFIX	FUNCTION	40	4	SUFFIX	x 689
Type of Installation: **None –** Installs Regular arm, Top Jamb to 3" reveal **TJ –** Top Jamb, reveals 2-3/4" to 7", 150˚ opening. **TJL –** Top Jamb, reveals 2-3/4" to 7", 180˚ opening **TJS –** Top Jamb, reveals 0-3" handed. (Non-hold open closers only) **J –** Top Jamb mount Slide Track closers only **P –** Push (stop) side slide track only **PA –** Parallel arm **PR –** Rigid Parallel arm **PRO –** Rigid Parallel Offset arm **R –** Regular Rigid heavy-duty arm (Torx screws not included) **UNI –** Uni Stop arm (parallel arm only – **specify door width**) **UNIJ –** Uni Stop arm (top jamb only **specify frame reveal)**	**Arm Function:** **None** – Non-hold open **1 –** Hold open **2 –** Low profile, non-hold open	**40 -** 400 Series	**Closer Size** **"2"** - ANSI size 2 **"3"** - ANSI size 3 **"4"** - ANSI size 4 **"5"** - ANSI size 5 **"6"** - ANSI size 6	**CB –** Coupon Booth Hold Open; Handed; 402CB & 403CB only. **H –** Hospital Hold Open; Handed; 1403H & 1404H only. **TB –** Telephone Booth Function; 402TB only. **M –** Metal Cover (cover is handed for Top Jamb applications) **ST –** Slide Track **ST-180 –** Slide Track 180˚ opening, without spring buffer. Max. opening for hinge (pull) side mounting. **DL –** Delayed Action **DE –** Double Egress (Slide Track pull side only). Handed **EBC –** Enhanced Backcheck **EP –** Extra Power **STP –** Slide Arm Pocket Door; 406STP only **EPSTP –** Extra Power, Slide Arm Pocket Door; 406EPSTP only **DLP –** Double lever pocket door; 406DLP only **EPDLP –** Extra Power Double Lever Pocket Door; 406EPDLP	**Finish** see page 2

Note:

- Door closer warranty becomes void if it is installed on the exterior side of a door in the exterior wall of a building.
- It is strongly recommended; and it is required on fire door assemblies, that doors having a door closer be hung on ball-bearing or anti-friction hinges or pivots.
- Failure to use the correct type and size fasteners may void factory warranty.
- Fasteners for fire/smoke door assemblies must conform to NFPA 80. In some applications additional fasteners may be mandated by NFPA 80 that are not shipped with Yale's standard product, such as sleeve nuts (sex nuts) or through bolts and grommet nuts.
- If other fasteners are required, the factory must be consulted to determine if those fasteners can be provided. If the fasteners can be supplied, this information must be clearly stated on the purchase order.

HOW TO ORDER 4400 SERIES

PREFIX	44	0	0	Suffix	x 689
Type of Installation: **None –** Installs Regular arm, Parallel arm or Top Jamb to 3" reveal **TJ –** Top Jamb reveals 2-3/4" to 7", (Non-hold open closers), reveals 2-3/4" to 6-3/4" (Hold open closers) 150˚ opening **TJL -** Top Jamb, reveals 2-3/4" to 7 " (Non-hold open closers) Reveals 2-3/4" to 6-3/4" (Hold open closers) 180˚ opening. **TJS –** Top Jamb, reveals 0-3", Handed. (Non-hold open closers only) **P –** Push (stop) side slide track only **PA –** Parallel arm **PR –** Rigid Parallel arm **PRO –** Offset Soffit Plate **R –** Rigid heavy-duty arm (Torx® screws not included –N/A in stainless steel) **UNI –** Uni Stop™ arm (parallel arm only – **specify door width)** **UNIJ –** Uni Stop™ arm (top jamb only **specify frame reveal)**	**4400** Multi-sized closer	**Arm Function:** **0 –** Non-hold open **1 –** Hold open **8 –** Low profile, non-hold open	**Closer Size** **0 -** Power Range 1 through 6	**M –** Metal Cover (cover is handed for Top Jamb applications) N/A w/ Corrosion Resistant Closer **S –** Corrosion Resistant **DL –** Optional Delayed Action feature **ST –** Pull Side Slide Track **ST-180 –** Slide Track 180˚ opening without spring buffer. Max. opening for hinge (pull) side mounting. **DE –** Double Egress (Slide Track pull side only). N/A w/ Corrosion Resistant Closer Handed **EBC –** Enhanced Backcheck	**Finish** see page 2

Note:

- Door closer warranty becomes void if it is installed on the exterior side of a door in the exterior wall of a building.
- It is strongly recommended; and it is required on fire door assemblies, that doors having a door closer be hung on ball-bearing or anti-friction hinges or pivots.
- Failure to use the correct type and size fasteners may void factory warranty.
- Fasteners for fire/smoke door assemblies must conform to NFPA 80. In some applications additional fasteners may be mandated by NFPA 80 that are not shipped with Yale's standard product, such as sleeve nuts (sex nuts) or through bolts and grommet nuts.
- If other fasteners are required, the factory must be consulted to determine if those fasteners can be provided. If the fasteners can be supplied, this information must be clearly stated on the purchase order.

HOW TO ORDER 4020/4420 HOLDER/STOP

402	4	SUFFIX		x689
402 - 400 Series Closer Body **442** - 4400 Series Closer Body	**Closer Size** **"0"** - Multi-size closer, Normal range (sizes 1-6) **"2"** - ANSI size 2 **"3"** - ANSI size 3 **"4"** - ANSI size 4 **"5"** - ANSI size 5 **"6"** - ANSI size 6	**None –** **M –** **T –** **DL –**	Non-hold open Metal Cover (cover is handed for Top Jamb applications) Thumbturn hold open Delayed Action	**Finish** see page 2

Note:

- Door closer warranty becomes void if it is installed on the exterior side of a door in the exterior wall of a building.
- It is strongly recommended; and it is required on fire door assemblies, that doors having a door closer be hung on ball-bearing or anti-friction hinges or pivots.
- Failure to use the correct type and size fasteners may void factory warranty.
- Fasteners for fire/smoke door assemblies must conform to NFPA 80. In some applications additional fasteners may be mandated by NFPA 80 that are not shipped with Yale's standard product.
- If other fasteners are required, the factory must be consulted to determine if those fasteners can be provided. If the fasteners can be supplied, this information must be clearly stated on the purchase order.

NOTES

online literature and templates

For the latest information on Yale Commercial Lock and Hardware products, visit our website at www.yalecommercial.com.

Click on the "Literature" button to find:

- Catalogs
- Parts manuals
- Templates
- Specifications
- Installation instructions

Yale® customers can click on the ebusiness symbol on the website to register for an ebusiness account to:

- Check the status of orders
- Check availability of Warehouse and Quick-Ship items
- Track your order and confirm delivery
- Receive email notification of template changes

And More...

www.yalecommercial.com

Yale Commercial Locks and Hardware

Address: 1902 Airport Road, Monroe, NC 28110 USA

Tel: 1-800-438-1951 • *Fax:* 1-800-338-0965 • www.yalecommercial.com

Yale-Corbin Canada Ltd.

Address: 6940 Edwards Boulevard, Mississauga, Ontario, Canada L5T 2W2

Tel: 1-800-461-3007 • *Fax:* 1-800-461-8989 • www.yalecorbin.on.ca

Yale® and Yale Security Inc.®, are registered trademarks of Yale Security Inc. UniStop™ is s trademark of Yale Security Inc. Other products brand names may be trademarks or registered trademarks of their respective owners and are mentioned for reference purposes only. Copyright© 2001, 2003 Yale Security Inc. All rights reserved. These materials are protected under US copyright laws. All contents current at time of publication. Yale Security Inc. reserves the right to change availability of any item in this bulletin, its design, construction, and/or its materials.

The ASSA ABLOY Group is the world's leading manufacturer and supplier of locking solutions, dedicated to satisfying end-user needs for security, safety and convenience.

An ASSA ABLOY Group brand

ASSA ABLOY

42081-MA-12.65-7/04