Yale®

DOOR CLOSER

50BC, 51

CATALOG

An ASSA ABLOY Group brand

ASSA ABLOY

THE ENGINEER'S CHOICE

Yale® 50 Series Closers are designed to fit almost any application and are the choice of engineers worldwide. They are ideal for use with aluminum store front doors and frames, yet they also complement wood or metal door installations. Non-handed, the 50 series is available as sized or multi-sized units and offers Tri Style® packaging on standard non hold-open and hold-open closers.

This UL listed, Grade 1 closer has a proven history of quality and tradition. With a variety of plates, brackets, precise valve adjustment and a complete range of arms, these closers can be used on retail stores, warehouses, restaurants, garages, or manufacturing and utility buildings.

STANDARD 50BC FEATURES

- ANSI A156.4, Grade 1
- 10-year warranty
- Non-handed
- Rack-and-pinion design
- Cast aluminum body
- 1-3/8" (35mm) diameter piston
- 5/8" (16mm) diameter pinion journals
- Standard, separate and independent, latch, sweep and backcheck intensity valves
- 2-7/8" (73mm) projection
- Tri-Packed-0.75"packed for regular arm, top jamb and parallel arm installations.
- All standard arm applications allow doors to swing 180°, conditions permitting
- UL10C compliant

Optional Features	50BC	51	51BF
Sized springs 2,3,4,5,6 with no power adjustment	X		
Adjustable spring sizes 3 through 6		X	
Adjustable spring sizes 1 through 4			X
ADA Compliant ANSI A117.1			X
Delayed action option with pressure relief valve (in lieu of backcheck)		X	X
Optional corrosion resistant model (non hold-open only)		X	X
Molded Plastic Cover	X	X	X
Holder/Stop, Holder/Stop Spring and UNI Stop™ Arms available	X	X	X

CONTENTS

Overview 2-3
Finishes 2
Fasteners 3
Features 4
Optional Features 4-5
Special Function Door Closers 6
Applications 7-9
Technical Details 10-17
Accessories 18-25
Parts List 26-34
Suggested Specifications 35-36
How To Order 37

FINISHES

Description	Specify Yale® (BHMA) Designation	Complements the following finishes	Old Yale® Designation
Aluminum	689	628, 625, 629, 630, 651, 652	AL
Statuary Bronze	690	640, 613	STAT
Dull Bronze	691	612, 637, 639	DB
Black	693	315	315
Medium Amber	694	312	312
Gold	696	605, 606, 632, 633	GB
Prime Coat (Beige)	600		SRI

OVERVIEW

CUTAWAY VIEW OF CLOSER BODY

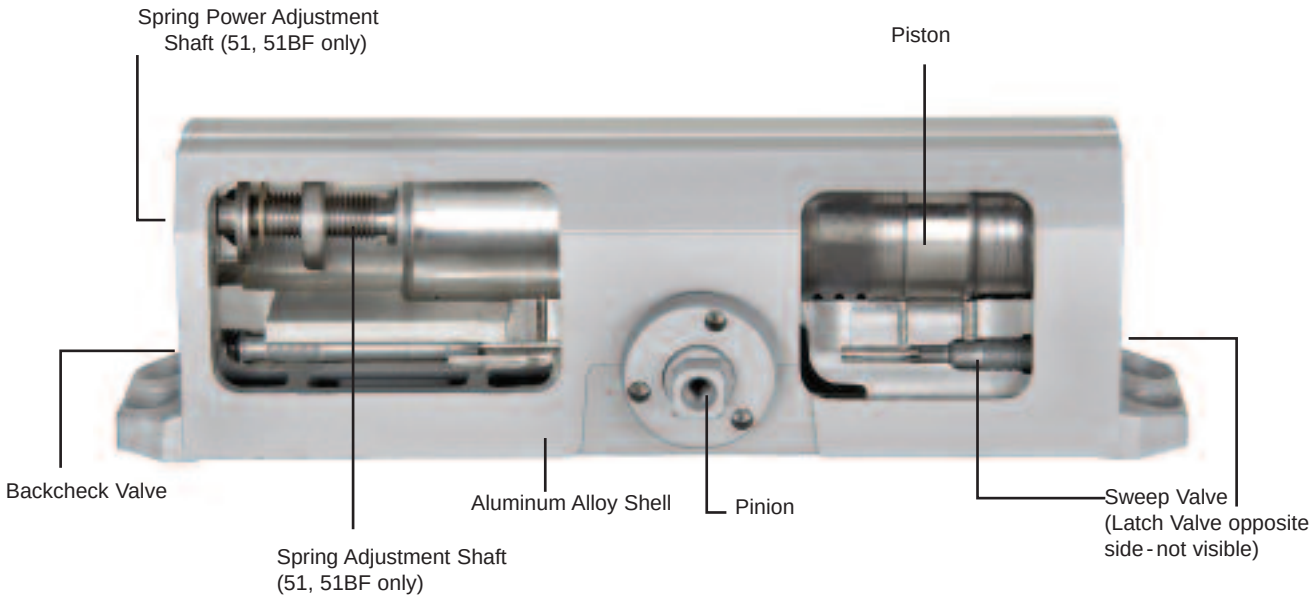

Spring omitted for illustration purposes

COMPLIANCE STANDARDS

The series 51BF door closers are designed to comply with requirements of the Americans with Disabilities Act (A.D.A.) and ANSI standard A117.1. All series 50BC/51(BF) comply with ANSI A156.4 Grade 1 Specification. All Yale® series 50BC/51(BF) closers with non hold-open arms are listed by Underwriters' Laboratories for labeled fire doors. This includes compliance to UL10C and UBC-72 (1997) for 3-hour assemblies. These products are manufactured in a certified ISO 9001 facility. These closers are also listed by New York City Materials and Equipment Acceptance Division.

FASTENERS

All closers with standard non hold-open and hold-open arms are shipped with self-drilling, self-tapping and machine screws. Sleeve nuts (SN) may be ordered as an option.

- PR, Holder/Stop, Holder/Stop Spring and UNI Stop™ arms have sleeve nuts as part of the standard screw pack.
- Sleeve nuts (SN) are available for all other closers, and should be used on steel doors to prevent dimpling or where proper door reinforcement has not been provided.
- Standard sleeve nuts are for 1-3/4" (44mm) thick doors. Sleeve nuts for 1-3/8" (35mm) or 2-1/4" (57mm) door thicknesses are available and must be specified.
- Through-bolts and grommet nuts (TBGN) are another fastener alternative intended for wood doors. Specify door thickness 1-3/4" (44mm), 1-3/8" (35mm), 2-1/4" (57mm) when ordering.

FEATURES

STANDARD FEATURES

Aluminum Alloy Housing
Closer bodies are pressure cast of a special aluminum alloy, carefully selected to accommodate interaction with steel components and operating conditions.

Rack & Pinion Operation
Provides a smooth constant control of the door through its full opening and closing cycle. 180° door swing can be achieved when door, frame, hardware and arm function do not interfere.

Non-handed
With few exceptions all series 50BC and series 51 door closers are non-handed and can be installed on either right or left-hand swing doors. Pinion shaft extends vertically through the closer body in both directions. This permits the closer to be positioned on either right or left-hand doors for most applications. Some options, (such as Rigid Parallel Hold-Open Arms) will require that the hand of the closer be specified.

Tri Style®
50BC/51(BF) comes with screws, brackets & soffit plate to allow for regular, top jamb, & parallel arm installations.

Sweep Speed Control Valve
Allows adjustment of door's speed from the doors full open position down to approximately 10° from the closed position.

Latch Speed Control Value
Allows adjustment of door speed from approximately 10° down to the door's fully closed position.

Adjustable Backcheck Cushion Valve
Provides control of the door in the opening cycle, beginning at approximately 75° of door opening. It slows/cushions the door opening, when the door is forcibly opened beyond its pre-adjusted opening speed limits.

Closer Fluid
All door closers are supplied with a temperature stable, multi-viscosity fluid. This fluid will permit the door closer to perform within a wide temperature range: from very high to as low as -40°F.

Warranty
These closers carry a limited ten-year warranty against defects and a limited lifetime warranty on the aluminum housing.

Door Closer Power Options

Series 50BC Sized Door Closer
Is available in five different power sizes (2, 3, 4, 5 or 6). Outlined in ANSI specification A156.4. Spring power is not adjustable.

Series 51 Multi-sized Door Closer
Is adjustable through the power range of sizes 3 through 6, as outlined in ANSI specification A156.4.

Series 51BF Multi-sized Door Closer
Is adjustable through the power range of sizes 1 through 4 to comply with the opening force requirements as outlined in the Americans with Disabilities Act (A.D.A.) and ANSI A117.1 for interior doors.

OPTIONAL FEATURES

Corrosion Resistant Door Closer
The series 51S and 51BFS door closers are available for use where corrosive conditions exist. This series is provided with zinc diecast adjustment valves, a 440 grade stainless steel pinion shaft, an all-aluminum body and bronze closer arm bushings; all other components and fasteners are of 302/303 grade stainless steel. This product is available for standard regular arm, top jamb and parallel arm, non hold-open, applications only.

Optional Molded Cover
Molded of high impact U.L. listed material that covers the entire closer body assembly. This cover is non-handed for all applications. Suffix "P" to model number.

FEATURES

OPTIONAL FEATURES - DELAYED ACTION

Adjustable Delayed Action Closing
An optional hydraulic feature that adds a third speed range to the closing cycle. This feature becomes effective when the door is opened and released at any point beyond 70°. The amount of time delay depends upon the combination of the angle of door release and valve adjustment. The valve can be adjusted with a 1/8" (3mm) hex key from no delay time up to maximum delay times of:

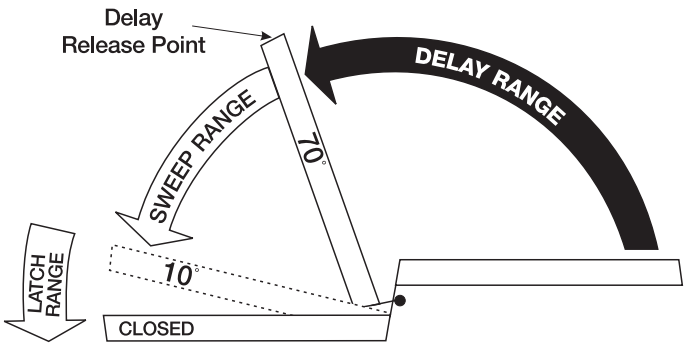

Door Opened and Released at	Approximate Time of Delay Cycle
180°	4-5 minutes
120°	2-3 minutes
90°	25-30 seconds

Pressure Relief Safety Valve
The delayed action hydraulic system contains a pressure relief valve. Any time the door is forced toward the closed direction while it is in the closing cycle, the valve will open and permit the door to close. This prevents damage to door, frame and closer.

Suggested Applications
Delayed Action closing allows slow-moving traffic to clear the opening before the door closer's normal closing cycle begins. This feature can be helpful in health care facilities such as hospitals and nursing homes. It provides sufficient time for persons on crutches or in wheelchairs to pass through a door without concern of it closing. At the same time, it can accommodate the facility's staff with movement of food service carts, beds, and other wheeled traffic.

Use of delayed action closers on many doors throughout industrial and commercial buildings can also assist the flow of traffic. Locations where additional time to clear the opening is advantageous are doors between office and factory/ warehouse facilities, doors to workshops or laboratories, to kitchen and food processing areas... to list just a few.

OPTIONAL FEATURES - ARMS

Non Hold-Open
Self-closes door every time door is opened. Auxiliary stop (by others) required except when using the Holder/Stop, Holder/Stop Spring or Uni Stop™ Arms.

Hold-Open
Achieved by means of friction or ball and detent/ roller. Friction hold-open has a range of 90° to 180° using template location and mechanical adjustment.

Ball and detent or roller hold-open is effective in a range of 85° to 110°.

Hold-open arm door closers are not permitted to be used on fire door assemblies.

Arm Function	Regular Arm, Top Jamb, Parallel Arm	Rigid Parallel Arm	Holder/Stop Parallel Arm	Holder/Stop Spring Parallel Arm	Uni Stop™ Parallel Arm	Uni Stop™ Top Jamb	Low Profile
Non Hold-Open	✓	✓	85° TO 110°	85° TO 110°	85° TO 110°	85° TO 110°	✓
Hold-Open	90° TO 180°	85° TO 180°	85° TO 110°	85° TO 110°	85° TO 110°	85° TO 110°	N/A

✓ = **180° trim and template permitting**

SPECIAL FUNCTION DOOR CLOSERS

SERIES 50BC SPECIAL FUNCTION DOOR CLOSERS

Telephone Booth Operation

Closer holds the door to the telephone booth open at 5° from the closed position. This prevents the light switch from being activated and allows the booth to be ventilated. It also indicates to users that the booth is unoccupied. Available in size 2 only, for regular arm or top jamb application only.

Coupon Booth Hold-Open

Most commonly used on doors to safe-deposit box inspection cubicles. Closer holds the door to the booth open at 15° to indicate that the booth is available for use by a safe-deposit box renter. When the door is opened beyond 70°, the closer will close the door and engage the lock, providing the occupant with the desired privacy.

Available in sizes 2 and 3 only for regular arm, top jamb or parallel arm application. Specify hand.

Hospital Hold-Open

Closer will hold door open at approximately 15° for ventilation, 45° for observation and beyond 90° for full access.

Closer is supplied with a standard hold-open arm for the beyond 90° hold-open position. Available in sizes 3 and 4 only for regular arm, top jamb or parallel arm application. Specify hand.

APPLICATIONS

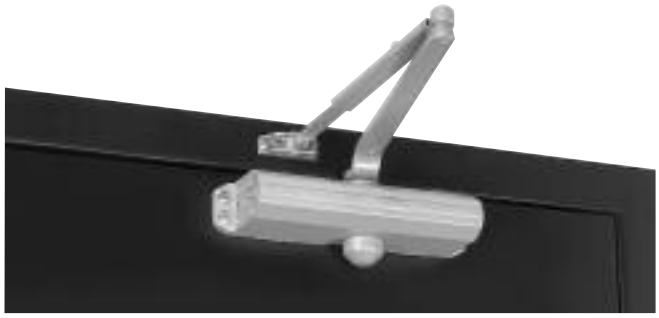

Non hold-open arm shown.

Regular Arm

This is the only pull-side application where a double lever arm is used. It is the most power-efficient application for a door closer. Sufficient frame, door and/or ceiling clearance must be considered.

Since the arm assembly projects directly out from the frame, this application may present an aesthetics issue or be prone to vandalism.

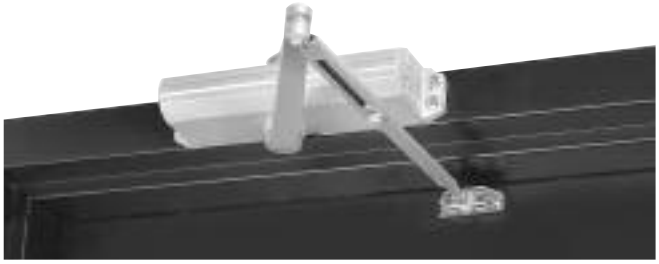

Non hold-open arm shown.

Top Jamb

For efficiency reasons this application provides the best alternative to the regular arm application. There must be sufficient frame face and/or ceiling clearance for this application. It requires a top rail on the door of just 2-1/8" (54mm). This application provides the best door control for doors in exterior walls that swing out of a building.

The entire door closer and arm assembly project from the frame, similar to the regular arm application, where the matters of appearance and malicious abuse can be of concern. Consideration must be given to depth of the frame reveal.

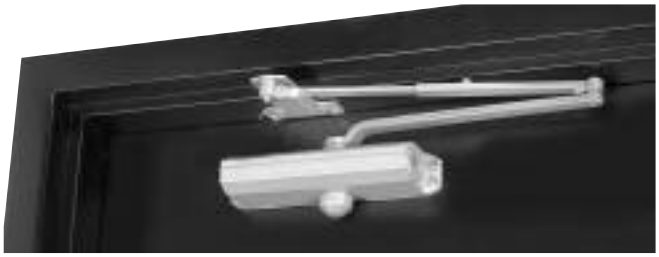

Non hold-open arm shown.

Parallel Arm

This application provides the most appealing design appearance for a surface-mounted door closer having a double lever arm. This may also be beneficial in vandalism-prone areas. It is on the push side of the door and the arm assembly extends almost parallel to the door. In the closed position, there is very little or no hardware projecting beyond the frame face in most situations.

Due to the geometry of the arm it is approximately 25% less power-efficient than a regular arm application.

The entire closer and arm assembly are mounted below the frame stop, requiring a top rail clearance on the door of between 5-3/8" (137mm), when using a low-profile arm (250 series), to 6-3/8" (162mm), when using the hold-open arm.

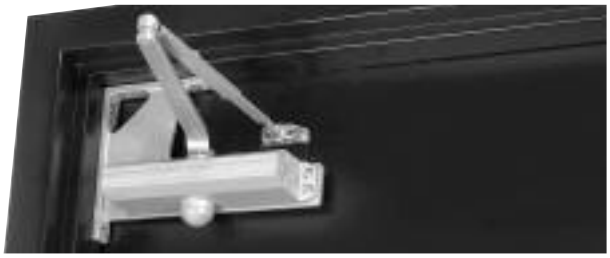

Corner Bracket

This application can be used where top jamb and parallel arm application will not accommodate the door and frame conditions. Requires minimal top rail on the door; however, vertical clearance to the floor within the door opening should be checked to ensure code compliance.

The close proximity, for this application, of the door closer to the door's pivot point reduces the door closer's power efficiency by approximately 25% when compared to a regular arm. The projection of the arm from the door face might pose questions regarding design parameters or environment.

APPLICATIONS

Non hold-open arm shown.

Rigid Parallel Arm

An enhanced variation of the standard parallel arm assembly that is intended for use in heavy traffic areas where auxiliary door stops are installed.

Hold-Open arm available - specify hand when ordering

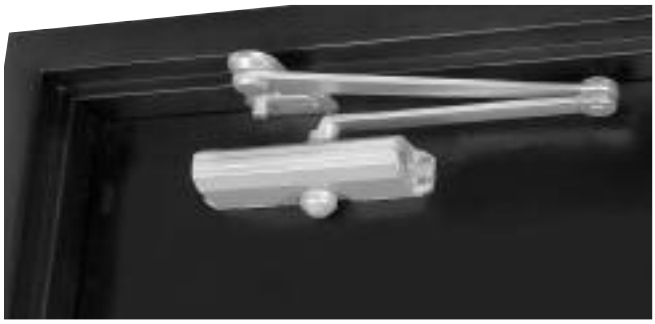

Non hold-open arm shown.

Holder/Stop Arm

Similar to the Rigid Parallel arm, this hand-reversible arm incorporates a stop at the arm's soffit plate to dead stop the door at a predetermined degree of door swing between 85° and 110°, in 5° increments.

Prior to dead stop the door closer's backcheck feature slows the door speed to reduce the impact of the stop action.

Holder/Stop Arm is intended for use where an auxiliary door stop cannot be utilized and no more than moderate abuse is anticipated. Where more extreme conditions are expected, use of a Holder/Stop Spring or Uni Stop™ arm is recommended.

Available with or without hold-open. (Hold-open strength is adjustable.)

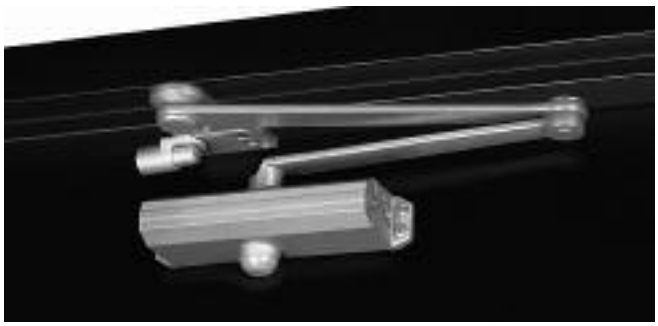

Non hold-open arm shown.

Holder/Stop Spring

This heavy-duty stop arm includes all of the features of the Holder/Stop arm, plus an added buffer spring that is compressed prior to the arm hitting the dead stop point. This greatly reduces the shock of the stoping action that occurs with the Holder/Stop arm detailed above.

APPLICATIONS

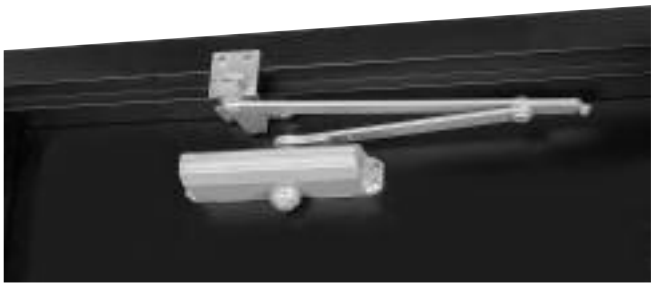

Uni Stop™ - Parallel Arm

Uni Stop™ Arm

Can be used for either parallel arm or top jamb applications. Uni Stop™ arms combine the features of a double lever arm overhead door stop/holder with the backcheck feature of the door closer to reduce door stopping shock loads to a minimum. A compression spring buffer at the soffit plate/arm shoe that will absorb 30 lbs. of force, 5° prior to the door's dead stop. Coupled with the door closer's backcheck feature the Uni Stop™ provides the most controlled stop available with a surface door closer.

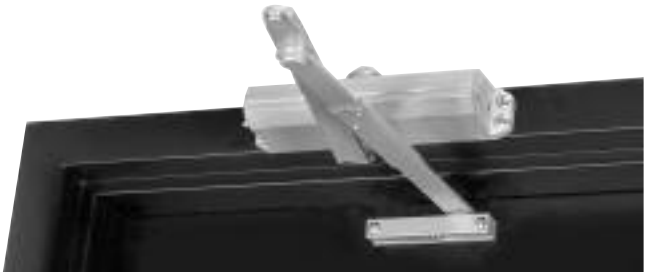

Uni Stop™ - Top Jamb

For parallel arm applications there are three different length arm assemblies. Each length is designed for a specific range of door widths, to provide precise door control. This further lessens the dead stop impact on the door's hinges/pivots.

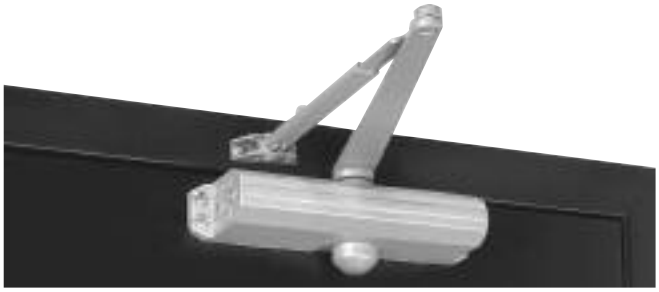

Low Profile - Regular Arm

Low-Profile Arm

Supplied with 250BC, 251(BF) series door closers for non hold-open installations only. Low-profile arms have a reduced height elbow joint and a straight main arm. This enables the door closer to be installed in less vertical space.

Regular Arm Allows closer to be installed where there is as little as 1" (25mm) of frame face or ceiling clearance.

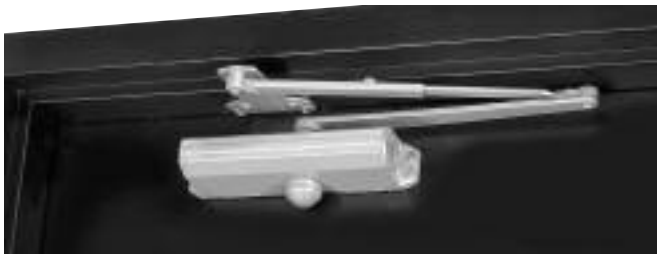

Low Profile - Parallel Arm

Parallel Arm Allows closer to be installed 1/2" (13mm) higher up on door than standard parallel arm application.

TECHNICAL DETAILS

REGULAR ARM

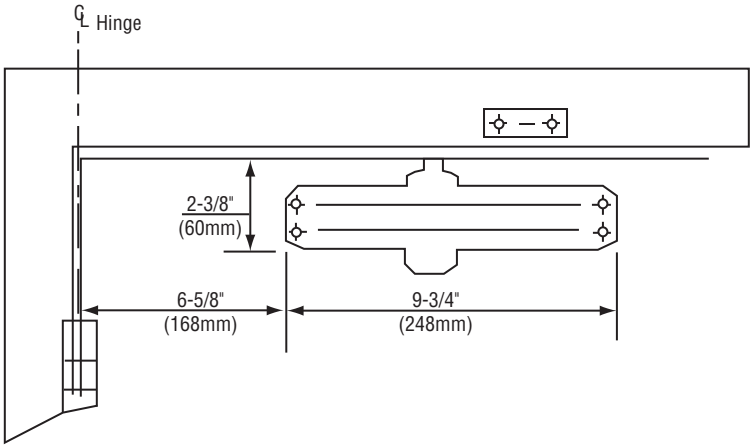

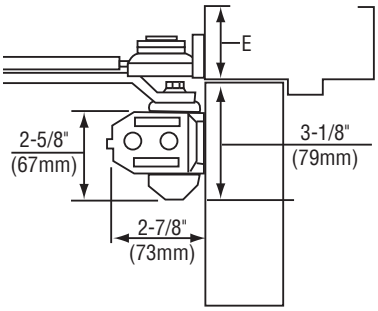

*** For doors opening up to 100°**
Mounting holes for closer body are spaced 3/4" (19mm) vertically x 9-1/16" (230mm) horizontally.

Maximum Door Size Inches (cm)		Model Number			
		Sized Closers		Multi-Sized Closers	
Interior	Exterior	Non Hold-Open	Hold-Open	Non Hold-Open	Hold-Open
32" (81)	—	52BC	152BC	51/ 51BF/	151/ 151BF
38" (97)	30" (76)	53BC	153BC		
42" (107)	36" (91)	54BC	154BC		
48" (422)	42" (107)	55BC	155BC		
—	48" (422)	56BC	156BC		

Dimensional Information Show in Inches (mm)		
E Minimum Ceiling Clearance		
Non Hold-Open		Hold-Open
50BC/51	250BC/251	150BC/151
1-1/2" (38)	1" (25)	1-5/8" (41)

Note:
51 Door Closers are adjustable for sizes 3 through 6, and are shipped set at size 4.
51BF Door Closers are adjustable for sizes 1 through 4, shipped set at size 2 and can be adjusted to conform to ADA opening force requirements.

TECHNICAL DETAILS

TOP JAMB

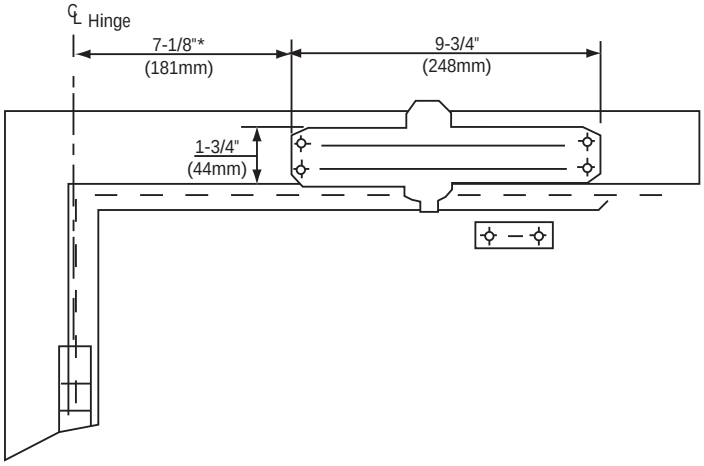

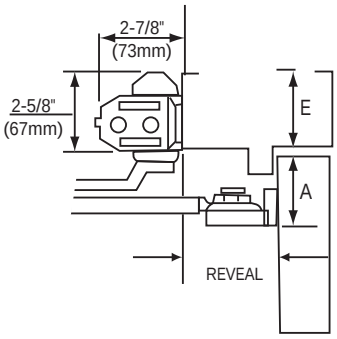

*** For doors opening up to 100°**
Mounting holes for closer body are spaced 3/4" (19mm) vertically x 9-1/16" (230mm) horizontally.

Maximum Door Size Inches (cm)		Model Number			
		Sized Closers		Multi-Sized Closers	
Interior	Exterior	Non Hold-Open	Hold-Open	Non Hold-Open	Hold-Open
32" (81)	—	52BC TJ52BC	152BC TJ152BC	51/ 51BF	151/ 151BF
38" (97)	30" (76)	53BC TJ53BC	153BC TJ153BC		
42" (107)	36" (91)	54BC TJ54BC	154BC TJ154BC		
48" (122)	42" (107)	55BC TJ55BC	155BC TJ155BC		
—	48" (122)	56BC TJ56BC	156BC TJ156BC		

Dimensional Information Show in Inches (mm)						
E Minimum Ceiling Clearance		A Minimum Top Rail Clearance				
Without Drop Plate	With Drop Plate	Without Drop Plate	With 587 Drop Plate		With 214 Drop Plate	
50BC/51	50BC/51 250BC/ 251	50BC/51	50BC/51	250BC/ 251	50BC/51	250BC/ 251
2-5/8" (67)	1-3/4" (44)	1-7/8" (48)	2-3/4" (70)	2-1/4" (57)	3-3/8" (86)	2-7/8" (73)

Closer Series	Reveal Inches (mm)
50	0 to 3" (0 to 76)
TJ50	2-7/8" to 7" (73 to 178)
150	0 to 2-3/4" (0 to 70)
TJ150	2-3/4" to 6-3/4" (70 to 171)

Note:
51 Door Closers are adjustable for sizes 3 through 6, and are shipped set at size 4.
51BF Door Closers are adjustable for sizes 1 through 4, shipped set at size 2 and can be adjusted to conform to ADA opening force requirements.

TECHNICAL DETAILS

PARALLEL ARM

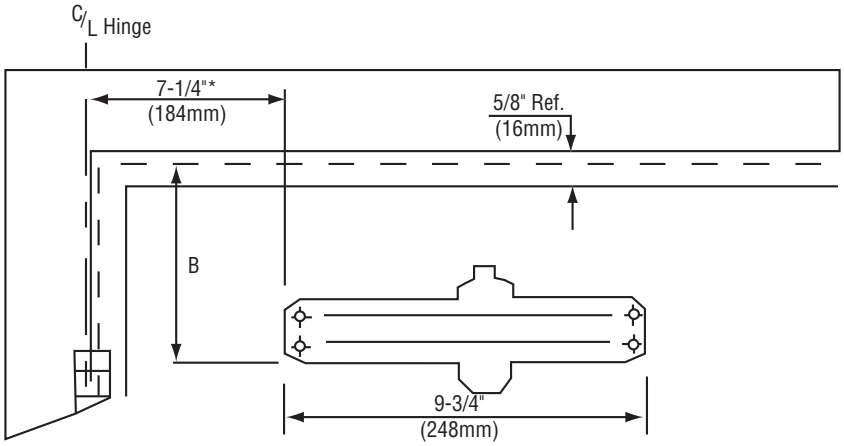

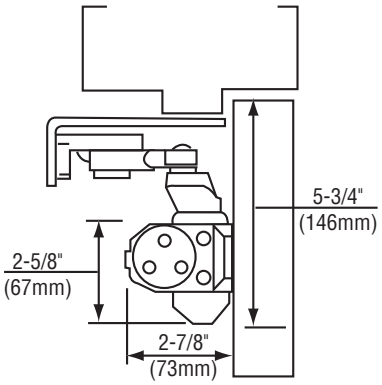

*** For doors opening up to 100°**
Mounting holes for closer body are spaced 3/4" (19mm) vertically x 9-1/16" (230mm) horizontally.

Maximum Door Size Inches (cm)		Model Number			
		Sized Closers		Multi-Sized Closers	
Interior	Exterior	Non Hold-Open	Hold-Open	Non Hold-Open	Hold-Open
30" (76)	—	(P)52BC	(P)152BC	51/ 51BF	151/ 151BF
36" (91)	30" (76)	(P)53BC	(P)153BC		
42" (107)	36" (91)	(P)54BC	(P)154BC		
48" (422)	42" (107)	(P)55BC	(P)155BC		
—	48" (422)	(P)56BC	(P)156BC		

B Minimum top rail of door with 5/8" (16mm) frame stop			
Without Drop Plate Inches (mm)		With Drop Plate Inches (mm)	
50BC/51	250BC/ 251	50BC/51	250BC/ 251
5" (127)	4" (102)	3-1/8" (79)	2-1/8" (54)

Note:
This door sizing information also applies to corner bracket mounted closers.
51 Door Closers are adjustable for sizes 3 through 6, and are shipped set at size 4.
51BF Door Closers are adjustable for sizes 1 through 4, shipped set at size 2 and can be adjusted to conform to ADA opening force requirements.

TECHNICAL DETAILS

RIGID PARALLEL ARM

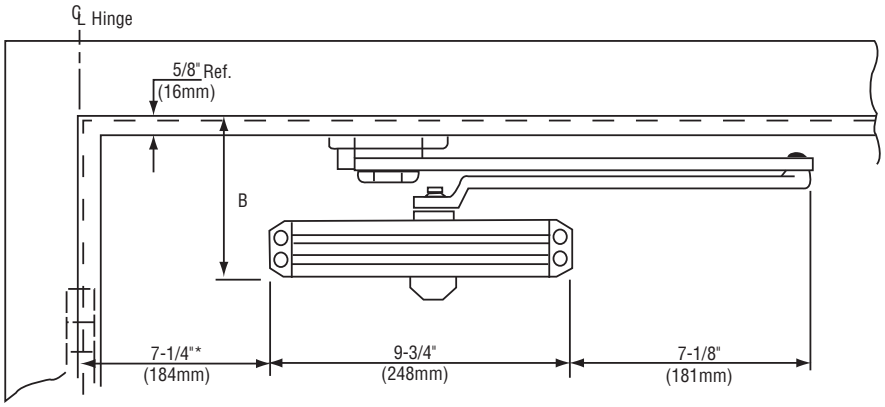

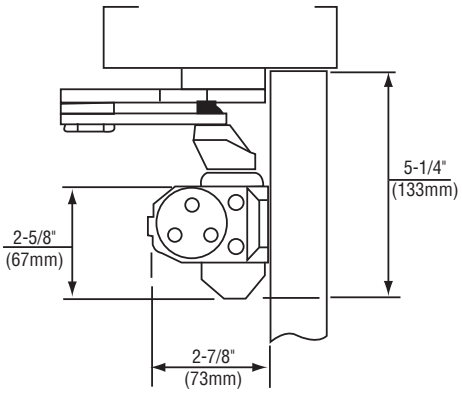

*** For doors opening up to 100°**
Mounting holes for closer body are spaced 3/4" (19mm) vertically x 9-1/16" (230mm) horizontally.

Door Size Wood or Metal Inches (cm)		Model Number			
		Sized Closers		Multi-Sized Closers	
Interior	Exterior	Non Hold-Open	Hold-Open	Non Hold-Open	Hold-Open
28"-32" (71-81)	—	PR52BC	PR152BC	PR51/ PR51BF	PR151/ PR151BF
33"-36" (84-91)	28"-32" (71-81)	PR53BC	PR153BC		
37"-42" (94-107)	33"-36" (84-91)	PR54BC	PR154BC		
43"-48" (109-122)	37"-42" (94-107)	PR55BC	PR155BC		
—	43"-48" (109-122)	PR56BC	PR156BC		

Note:
51 Door Closers are adjustable for sizes 3 through 6, and are shipped at size 4.
51BF Door Closers are adjustable for sizes 1 through 4, shipped set at size 2 and can be adjusted to conform to ADA opening force requirements.

TECHNICAL DETAILS

HOLDER/STOP ARM

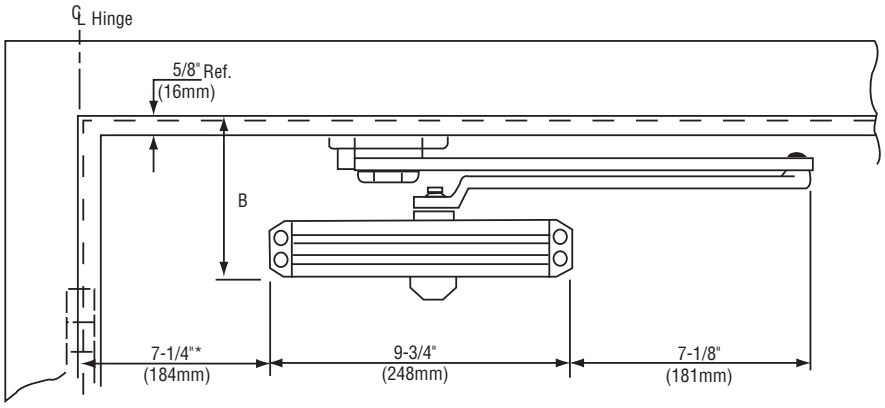

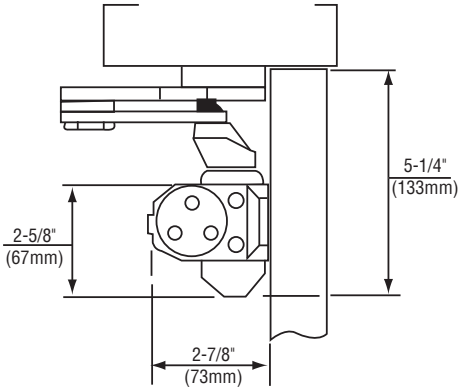

Mounting holes for closer body are spaced 3/4" (19mm) vertically x 9-1/16" (230mm) horizontally.

Door Size Wood or Metal Inches (cm)		Model Number			
		Sized Closers		Multi-Sized Closers	
Interior	Exterior	Non Hold-Open	Hold-Open	Non Hold-Open	Hold-Open
28"-32" (71-81)	—	5122BC	5122BCT	5121/ 5121BF	5121T/ 5121BFT
33"-36" (84-91)	28"-32" (71-81)	5123BC	5123BCT		
37"-42" (94-107)	33"-36" (84-91)	5124BC	5124BCT		
43"-48" (109-122)	37"-42" (94-107)	5125BC	5125BCT		
—	43"-48" (109-122)	5126BC	5126BCT		

Note:
51 Door Closers are adjustable for sizes 3 through 6, and are shipped at size 4.
51BF Door Closers are adjustable for sizes 1 through 4, shipped set at size 2 and can be adjusted to conform to ADA opening force requirements.

B Minimum Top Rail of Door	
Without Drop Plate (mm)	With Drop Plate (mm)
4-1/2" (114)	2-5/8" (67)

TECHNICAL DETAILS

HOLDER/STOP SPRING ARM

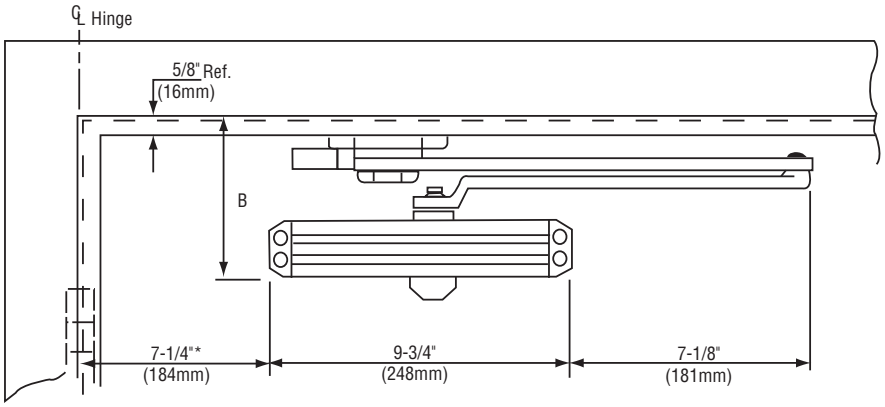

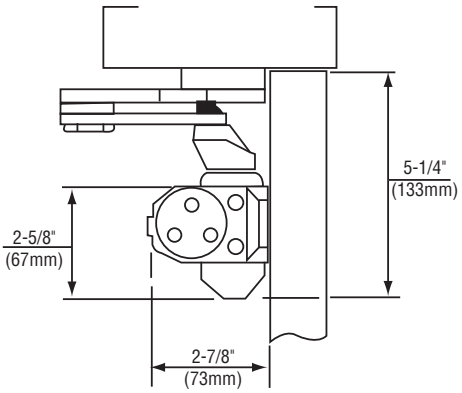

*** For doors opening up to 100°**
Mounting holes for closer body are spaced 3/4" (19mm) vertically x 9-1/16" (230mm) horizontally.

Door Size Wood or Metal Inches (cm)		Model Number			
		Sized Closers		Multi-Sized Closers	
Interior	Exterior	Non Hold-Open	Hold-Open	Non Hold-Open	Hold-Open
28"-32" (71-81)	—	5132BC	5132BCT	5131/ 5131BF	5131T/ 5131BFT
33"-36" (84-91)	28"-32" (71-81)	5133BC	5133BCT		
37"-42" (94-107)	33"-36" (84-91)	5134BC	5134BCT		
43"-48" (109-122)	37"-42" (94-107)	5135BC	5135BCT		
—	43"-48" (109-122)	5136BC	5136BCT		

Note:
51 Door Closers are adjustable for sizes 3 through 6, and are shipped at size 4.
51BF Door Closers are adjustable for sizes 1 through 4, shipped set at size 2 and can be adjusted to conform to ADA opening force requirements.

B Minimum Top Rail of Door	
Without Drop Plate (mm)	With Drop Plate (mm)
4-1/2" (114)	2-5/8" (67)

TECHNICAL DETAILS

UNI STOP™ - PARALLEL ARM

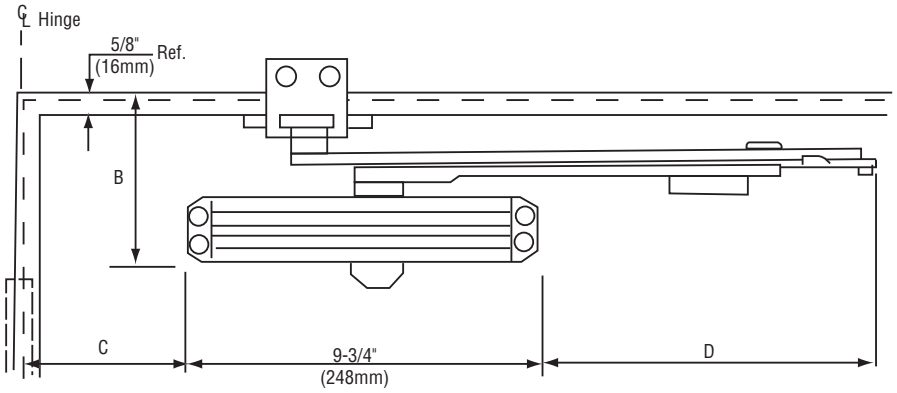

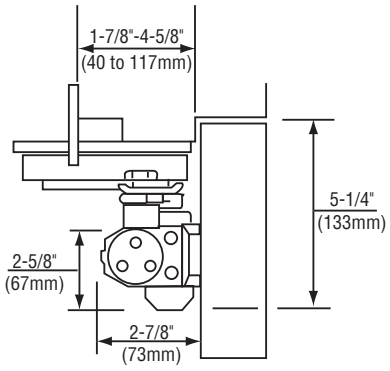

Mounting holes for closer body are spaced 3/4" (19mm) vertically x 9-1/16" (230mm) horizontally.

See pg. 23 for optional brackets.

Door Width All dimensions: inches (mm)	B Minimum Top Rail of Door		C Template Position for Hold-Open or Stop at Listed Angle						D Arm Extension Beyond Closer
	Without Drop Plate	With Drop Plate	85°	90°	95°	100°	105°	110°	
28"-32" (71-81)	4-1/2" (114)	2-5/8" (67)	8-1/4" (210)	7-5/8" (194)	7" (178)	6-5/8" (168)	6-3/8" (162)	5-7/8" (149)	7" (178)
33"-36" (84-91)			10-5/8" (270)	9-7/8" (251)	9-3/8" (238)	8-7/8" (225)	8-3/8" (213)	7-7/8" (200)	8-1/2" (216)
42"-48" (107-122)			12-7/8"" (327)	12-1/8" (308)	11-3/8" (289)	10-7/8" (276)	10-3/8" (266)	9-7/8" (251)	10" (254)

Door Size Wood or Metal All dimensions: inches (cm)		Model Number				
		Sized Closers		Multi-Sized Closers		
Interior	Exterior	Non Hold-Open	Hold-Open	Non Hold-Open	Hold-Open	
28"-32" (71-81)	—	UNI52BC	UNI152BC	UNI51/ UNI51BF	UNI151/ UNI151BF	x Specify Door Width
33"-36" (84-91)	28"-32" (71-81)	UNI53BC	UNI153BC			
37"-41" (94- 104)	33"-36" (84-91)	UNI54BC	UNI154BC			
42"-48" (107-122)	37"-41" (94- 104)	UNI55BC	UNI155BC			
—	42"-48" (107-122)	UNI56BC	UNI156BC			

Note:
51 Door Closers are adjustable for sizes 3 through 6, and are shipped set at size 4.
51BF Door Closers are adjustable for sizes 1 through 4, shipped set at size 2 and can be adjusted to conform to ADA opening force requirements.

TECHNICAL DETAILS

UNI STOP™ - TOP JAMB

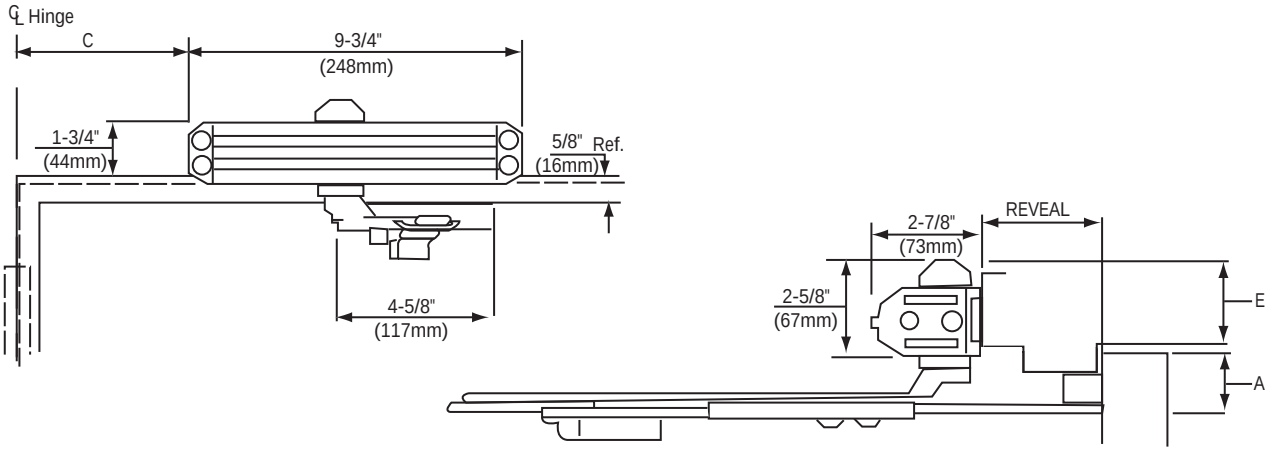

Mounting holes for closer body are spaced 3/4" (19mm) vertically x 9-1/16" (230mm) horizontally.

E Minimum Ceiling Clearance		A Minimum Top Rail Clearance		C Template Position for Hold-Open or Stop at Listed Angle					
Without Drop Plate	**With Drop Plate**	**Without Drop Plate**	**With 1687 Drop Plate**	**85°**	**90°**	**95°**	**100°**	**105°**	**110°**
2-5/8" (67)	1-3/4" (44)	2-3/8" (60)	3-1/8" (79)	8-3/4" (222)	8 (203)	7-3/8" (187)	7" (178)	6-3/8" (162)	6-1/8" (156)

Door Size Wood or Metal All dimensions: inches (cm)		Model Number				
		Sized Closers		Multi-Sized Closers		
Interior	**Exterior**	**Non Hold-Open**	**Hold-Open**	**Non Hold-Open**	**Hold-Open**	
28"-34" (71-86)	—	UNIJ52BC	UNIJ152BC	UNIJ51/ UNIJ51BF	UNIJ151/ UNIJ151BF	**x Specify Frame Reveal**
35"-42" (89-107)	28"-32" (71-81)	UNIJ53BC	UNIJ153BC			
37"-41" (94- 104)	33"-36" (84-91)	UNIJ54BC	UNIJ154BC			
42"-48" (107-122)	37"-41" (94- 104)	UNIJ55BC	UNIJ155BC			
—	42"-48" (107-122)	UNIJ56BC	UNIJ156BC			

Note:
51 Door Closers are adjustable for sizes 3 through 6, and are shipped set at size 4.
51BF Door Closers are adjustable for sizes 1 through 4, shipped set at size 2 and can be adjusted to conform to ADA opening force requirements.

ACCESSORIES

REGULAR ARM

Brackets for Non Hold-Open Arms

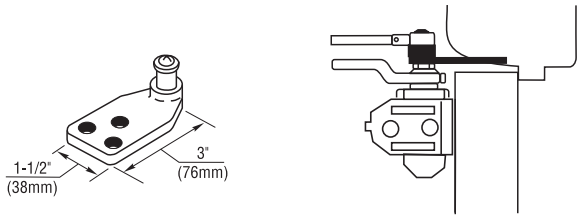

Molded/Bull Nose Trim - #291 Bracket
For use where the door frame has molded or bull nose trim which will not accept a standard non hold-open shoe. The bracket is mortised into the frame rabbet, and projects beyond the face of the frame. It will accommodate a frame rabbet up to 2" (51mm) deep.

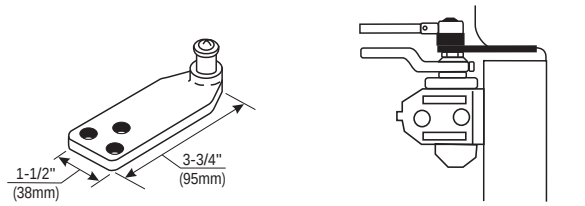

Molded/Bull Nose Trim - #291A Bracket
This bracket is similar to - but longer than - the 291 bracket. It is designed to accommodate frame rabbets from 2" to 2-7/8" (51mm to 73mm) deep.

Brackets for Hold-Open Arms

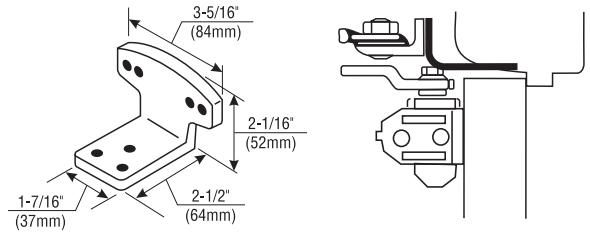

Molded/Bull Nose Trim - #292 Bracket
For use where the door frame has molded or bull nose trim which will not accept a standard Hold-Open shoe. It is mortised into the frame rabbet, and projects beyond the face of the frame. It will accommodate a rabbet up to 2" (51mm) deep. This bracket is used in combination with the standard hold-open mounting shoe.

Corner Brackets for Closer Mounting

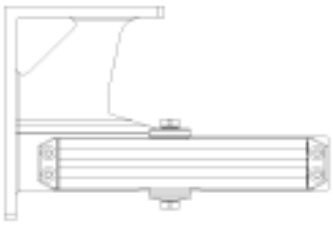

For closer sizing information, use the Parallel Arm sizing chart on page 12.

Mounting Opposite Hinge Side - #2350 Corner Bracket
For use where it is desired to mount the closer regular arm on the opposite to hinge side of the door. Can also be used to clear an overhead door holder.

ACCESSORIES

TOP JAMB

Closer Mounting Plates

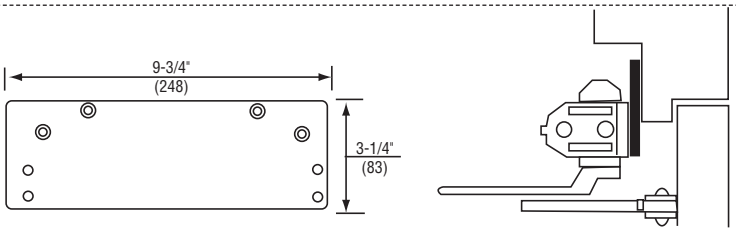

Overhead Door Holder - #214 Drop Plate
For use where a overhead door holder prevents normal top jamb mounting. This places the center line of the arm mounting screws at 3-1/2" (89mm) from the top of the door.

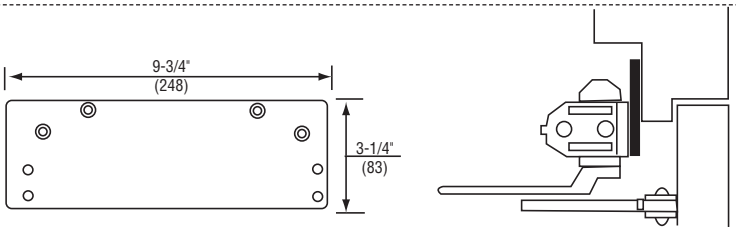

Low Ceiling Clearance - Overhead Door Holder - #587 Drop Plate
For use where the ceiling clearance is between 1-3/4" and 2-5/8" (44mm and 67mm). Or for use where an overhead door holder prevents normal top jamb mounting. This places the centerline of the arm mounting screws at 2-1/8" (54mm) from the top of door.

ACCESSORIES

PARALLEL ARM

Closer Mounting Plate

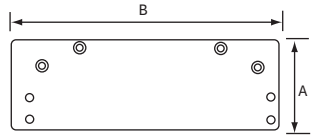

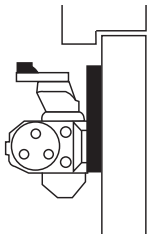

Narrow Top Rail - #214 Drop Plate
For use where a narrow top rail prevents the closer from being mounted directly to the door surface. This drop plate can be used to mount a closer on a top rail as narrow as 3-1/8" (79mm) in height for 50BC or 2-1/8" (54mm) for 50BCP.

Plate No.	Dimensions	
	A (width)	B (length)
214	3-1/4" (83mm)	9-3/4" (248mm)
214C	4-1/8" (105mm)	9-7/8" (251mm)

Note: **#214C** - To be used when optional cover is specified.

Brackets for Non Hold-Open Arms

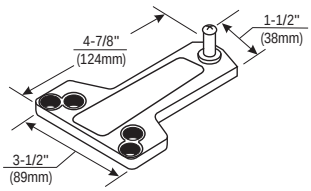

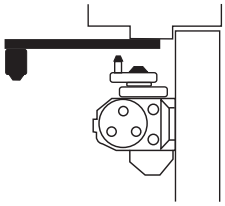

Standard Installation - #289A Soffit Plate
This soffit plate is supplied standard with parallel arm closers. It can be mounted where the frame soffit is as narrow as 1" (25 mm). Specify **289A-SS for stainless steel soffit plate**. With Series PA51S closers, a 289A-SS soffit plate fabricated of stainless steel is supplied standard.

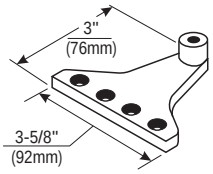

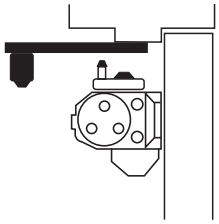

Narrow Frame/Removable Stop - #297 Soffit Plate
For use where a narrow frame or frame with removable stop does not permit use of the standard soffit plate. This soffit plate may be mounted on the frame soffit or the frame rabbet where the stop does not exceed 5/8" (16mm) in height. All of the screw holes are in a straight line, requiring as little as 1-1/4" (32mm) of frame reveal to mount bracket and maintain good closer arm geometry. Where the frame soffit is as wide as 2" (51mm), this soffit plate may be used to clear weather - stripping that is up to 1-3/8" (35mm) wide and 5/8" (16mm) in height.

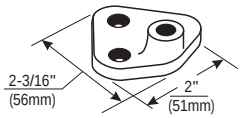

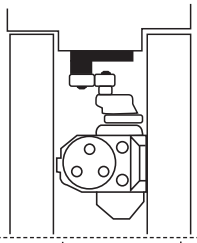

Mounting Between Doors - #413A Soffit Bracket
For use where insufficient space between companion doors does not permit use of other soffit plates. This bracket permits mounting of the closer between doors with as little as 3" (76mm) of header space. Permits closer arm to clear up to 5/8" (16mm) high stop.

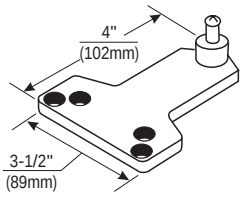

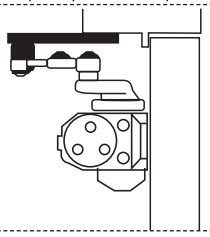

Blade/Applied Stop - #299 Soffit Plate
For use where a blade or applied stop does not permit installation of the standard soffit plate. Mounts to either the frame soffit or rabbet. Since this soffit plate projects 7/8" (22mm) less than a standard soffit plate, it requires a minimum frame reveal of 1-1/2" (38mm). Permits closer to clear up to a 5/8" (16mm) high frame stop.

ACCESSORIES

PARALLEL ARM

Brackets for Non Hold-Open Arms (Continued)

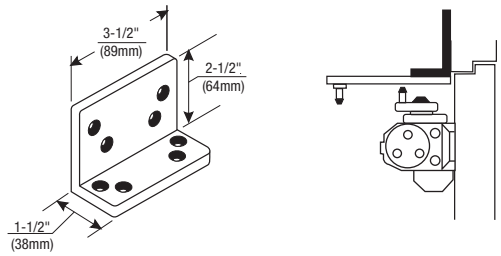

Flush Transom - #589L Angle Bracket
For use where rabbeted or flush transom conditions prevent installation of a soffit plate. Used in combination with the 289A soffit plate, or may be used in combination with the 290 soffit plate when it is necessary for the closer arm to clear a separate overhead door holder.

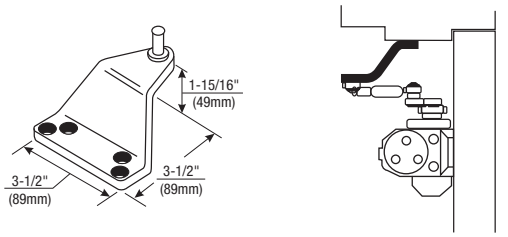

Extra-clearance - #290 Offset Soffit Plate
For use where the need for additional clearance prevents use of the standard soffit plate. This plate mounts to the frame soffit to provide up to 2" (51mm) of clearance when a separate overhead door holder is used. Standard mounting requires a 2-5/8" (67mm) wide frame soffit. It may also be used where unusually high frame stops or weather-stripping prevent the use of other soffit plates.

Brackets for Hold-Open Arms

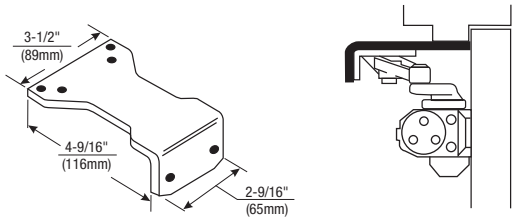

Parallel Hold-Open - #588 Adapter Plate
This Adapter Plate is supplied standard with all parallel arm hold-open closers. It can also be used to convert regular arm or top jamb hold-open arms to parallel arm installation. It can be mounted where the frame soffit is as narrow as 1" (25mm).

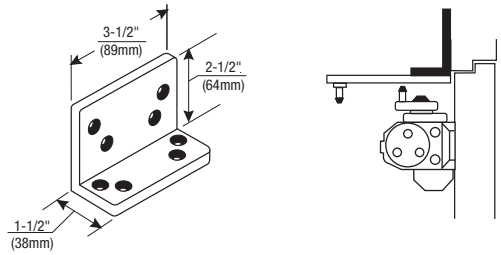

Flush Transom Hold-Open - #589L Angle Bracket
For use where rabbeted or flush transom conditions prevent installation of the standard 588 hold-open adapter plate. It is used in combination with the 588 adapter plate.

ACCESSORIES

RIGID PARALLEL, HOLDER STOP AND HOLDER STOP SPRING ARMS

Closer Mounting Plate

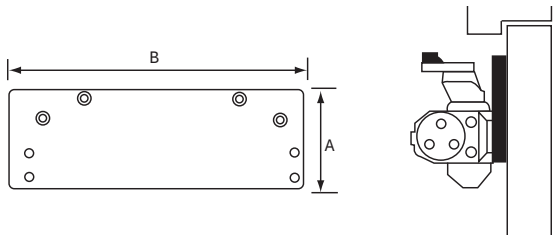

Narrow Top Rail - #214 Drop Plate
For use where a narrow top rail prevents the closer from being mounted directly to the door surface. This drop plate can be used to mount a closer on a top rail as narrow as 2-5/8" (67mm) in height.

Plate No.	Dimensions	
	A (width)	B (length)
214	3-1/4" (83mm)	9-3/4" (248mm)
214C	4-1/8" (105mm)	9-7/8" (251mm)

Note: #214C - To be used when optional cover is specified.

Brackets for Non Hold-Open Arms & Hold-Open Arms

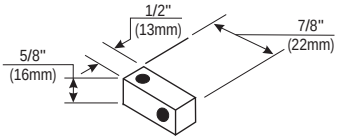

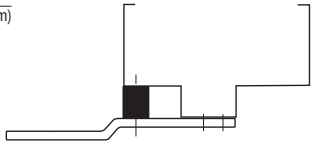

Standard - #293S Spacer Block
For use where a narrow frame soffit does not provide adequate support for the soffit plate. Supplied as standard with all rigid parallel arm closers. For use on frame with either 1/2" (13mm) or 5/8" (16mm) high frame stop.

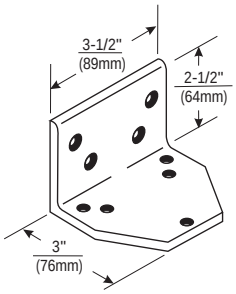

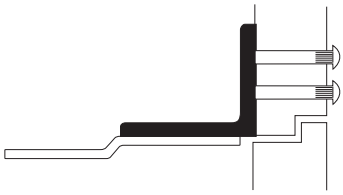

Flush Rabbeted Transom - #293L Angle Bracket
For use where flush transom conditions prevent mounting of the standard soffit plate. This bracket is used in combination with the arm's soffit plate.

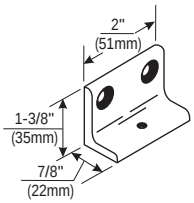

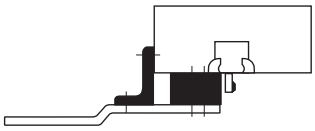

Narrow Frame - #890 Support Bracket
For use where the frame is narrow, and the soffit plate cannot be mounted directly to the frame soffit or rabbet. Used in combination with the #891 Spacer Block on blade stop frames to provide extra support and needed clearance of the blade stop. Used on frame where frame stop does exceed 5/8" (16mm) in height.

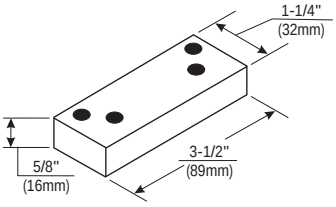

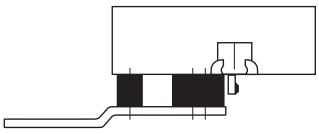

Clearance/Support Blade Stop - #891 Spacer Block
For use where the door frame has a blade stop and the soffit plate must be mounted on the frame rabbet. This accessory is used in combination with the standard 293S Spacer Block to provide clearance of the blade stop. For clearance of 5/8" (16mm) high-frame stop.

ACCESSORIES

UNI STOP™ ARM-PARALLEL

Closer Mounting Plate (For Parallel Arm)

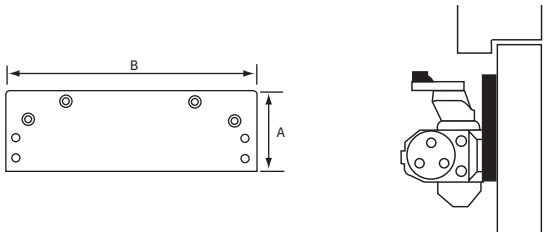

Narrow Top Rail - #214 Drop Plate
For use where a narrow top rail prevents the closer from being mounted directly to the door surface. This drop plate can be used to mount a closer on a top rail as narrow as 2-5/8" (67mm) in height.

Plate No.	Dimensions	
	A (width)	B (length)
214	3-1/4" (83mm)	9-3/4" (248mm)
214C	4-1/8" (105mm)	9-7/8" (251mm)

Note: #214C - To be used when optional cover is specified.

Soffit Plate Reinforcing Brackets (For Parallel Arm)

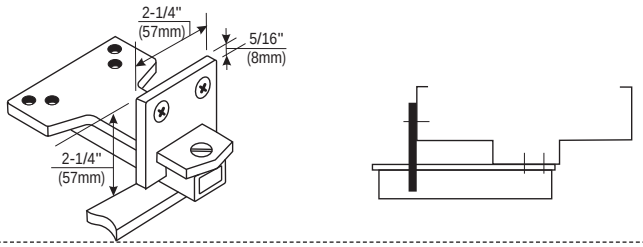

Additional Support - #6190 Reinforcing Bracket
Standard for use with all Parallel Arm Uni Stop™ Door Controls. Provides additional support to the soffit plate on installations with door frame reveals from 1-7/8" to 4-5/8" (48mm to 117mm).

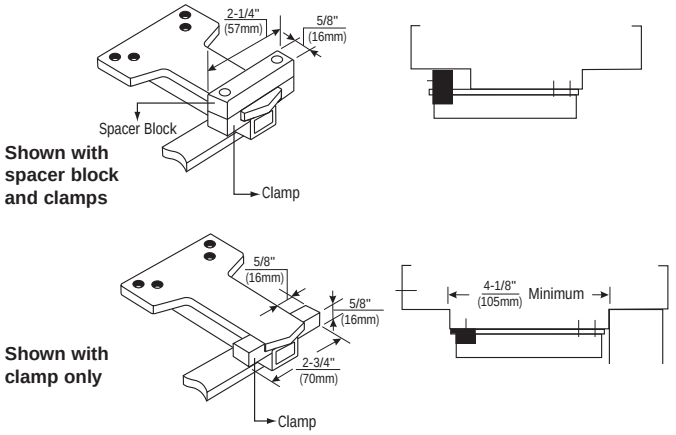

Shown with spacer block and clamps

Shown with clamp only

Wide Frame - #6191 Reinforcing Kit
Optional for use with all Parallel Arm Uni Stop™ Door Controls. Used to support the soffit plate on installations with deep frames. Clamps may be used with or without the spacer block, depending on frame conditions.
For frame reveals in excess of 4-5/8" (117mm).

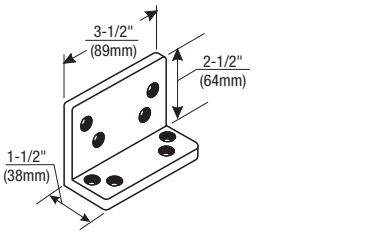

Flush Rabbeted Transom - #589L Angle Bracket
Optional for use with all Parallel Arm Uni Stop™ Door Controls. For use where rabbeted or flush transom conditions prevent installation of the soffit plate assembly. This bracket fastens to the overhead transom to provide a mounting surface for the soffit plate assembly.

ACCESSORIES

UNI STOP™ ARM-TOP JAMB

Closer Mounting Plate (For Top Jamb)

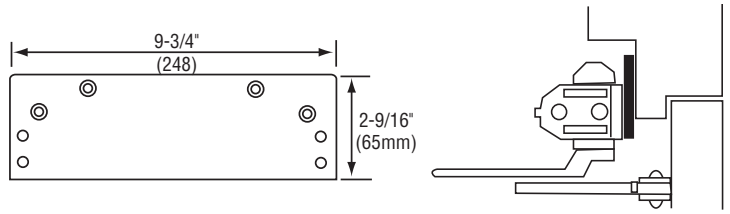

Low Ceiling Clearance - #587 Drop Plate
For use where the ceiling clearance is between 1-3/4" and 2-5/8" (44mm and 67mm). This places the centerline of the arm mounting screws at 2-5/8" (67mm) from the top of door.

SPECIAL ACCESSORIES

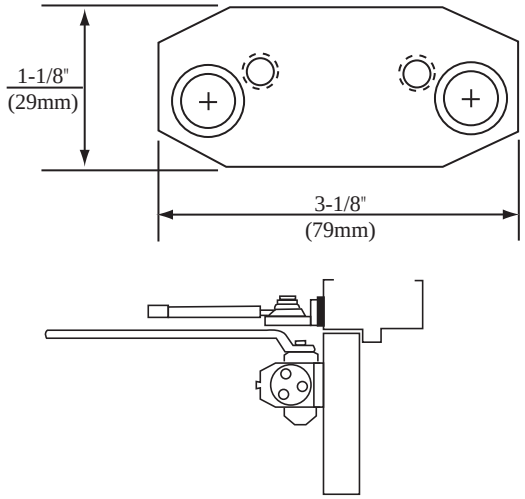

Converting Old Hold-Open Installations - #294 Adapter Plate
For use on old hold-open installations with 2-1/2" (64mm) hole spacing on the holder bracket. Plate uses existing holes in either door or frame and accepts the new hold-open bracket with 1-3/4" (44mm) hole spacing. For regular arm or top jamb installations.

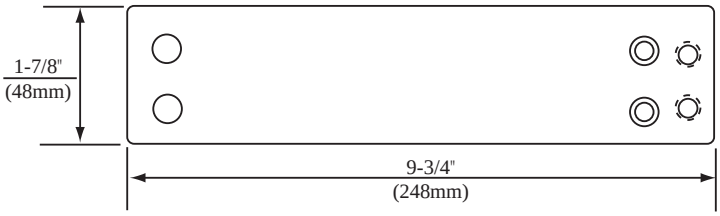

599 Adapter Plate
Converts old 52/53 closer installations with 3/4" (19mm) x 8-3/16" (208mm) spacing to new 52BC, 53BC or 51BF, using existing mounting holes in door or frame.

ACCESSORIES

DOOR CLOSER BODY ASSEMBLIES

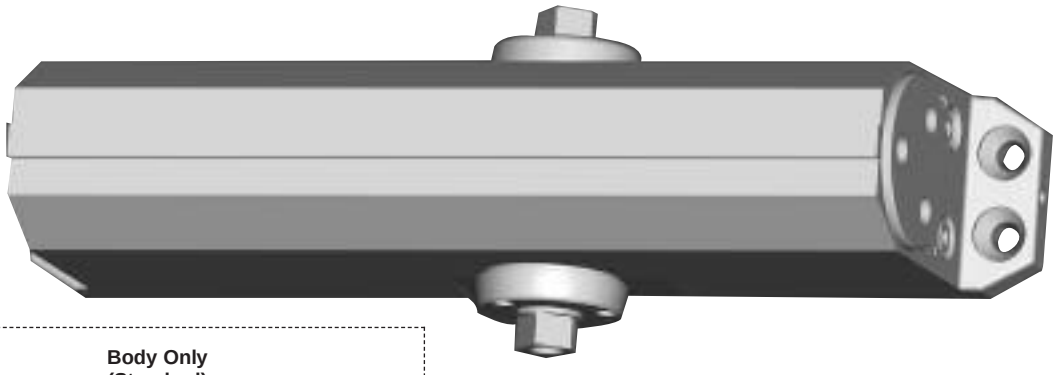

Body Only (Standard)	
5*BCLAP	Sized Closer
51LAP	Multi-sized
51BFLAP	Barrier Free
51DLLAP	Delayed Action
51BFDLLAP	Barrier Free Delayed Action
51SLAP	Stainless Steel
51DLSLAP	Stainless Steel Delayed Action

LAP = Less All Parts

*** Specify closer size. Pinion cap and mounting screws supplied standard.**

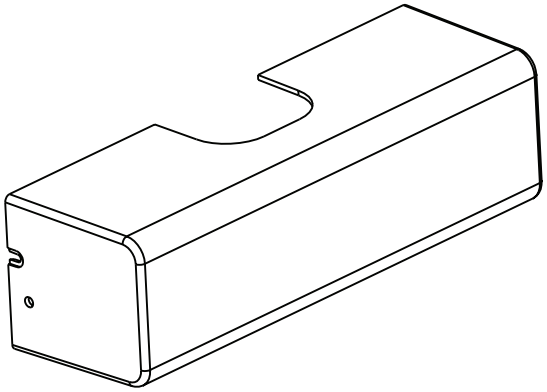

Optional Cover - 50P

2-7/8"(73mm) height x 3-1/6"(78mm) deep x 9-7/8"(251mm) long
To order with closer use "P" suffix; ie 54BCP.

FASTENERS

Steel Door Application
Sex Nut / Sleeve-Nut : "SN" (4 per pack) or
Sex Nut / Sleeve-Nut & Screw: "SNB" (4 per pack)

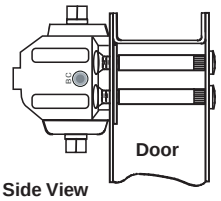

Side View

Door	SN's	SNB's
1-3/8"	SN-138	SNB138-38
1-3/4"	SN-134	SNB134-38
2-1/4"	SN-214	SNB214-38
S.S. SNB's 1-3/4"	SN-134SS	SNB134SS-38

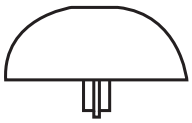

1639 Pinion Cap

Aluminum and Wood Door Application
(Aluminum Door Shown)
Through-Bolt & Grommet Nut : "TBGN" (4 per pack)

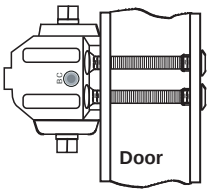

Door	TBGN's
1-3/8"	TBGN138-38
1-3/4"	TBGN134-38
2-1/4"	TBGN214-38

PARTS LIST

NON HOLD-OPEN ARM ASSEMBLIES

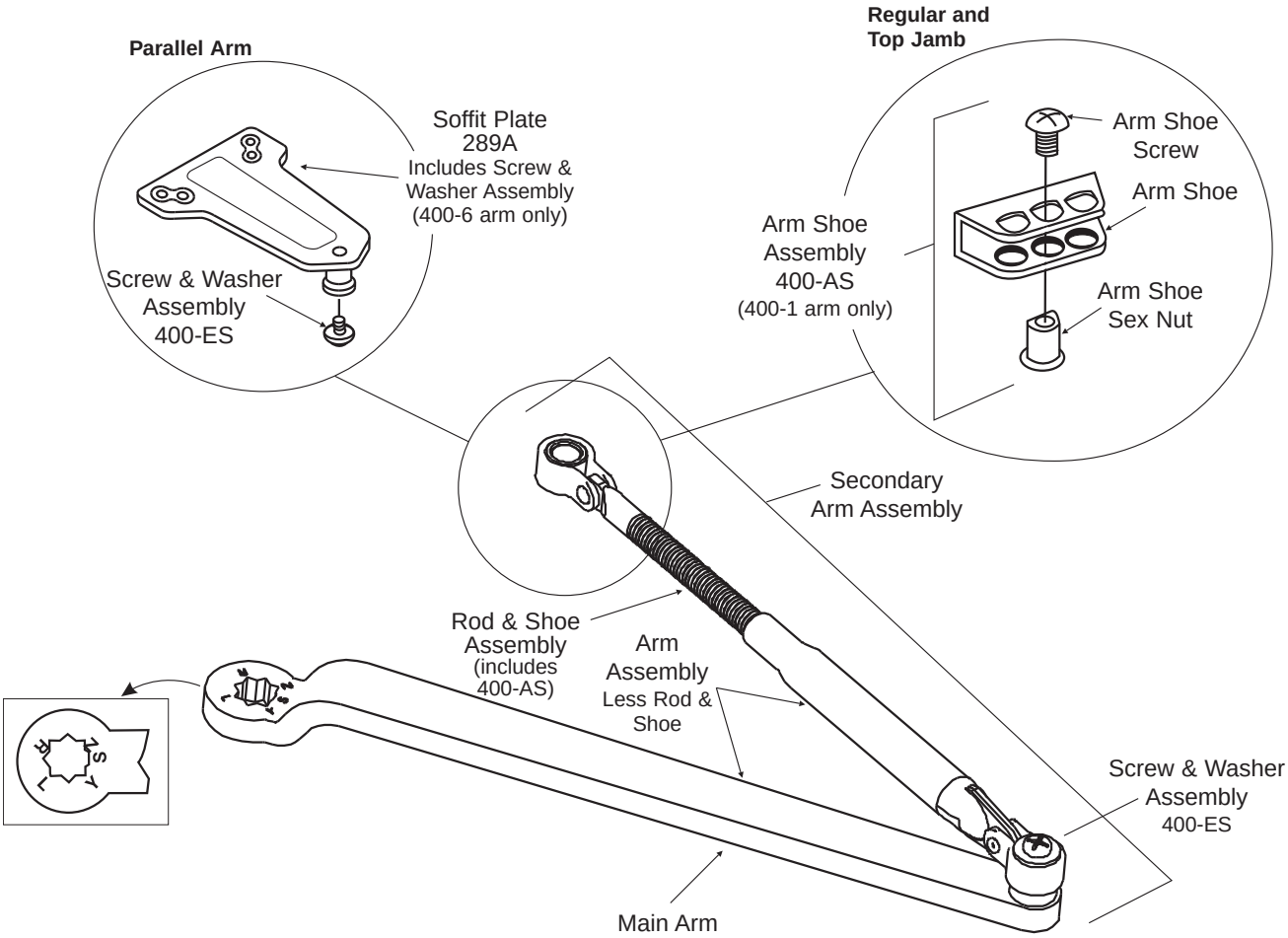

Note: Mounting hardware included with all parts orders.

Closer Series	Complete Arm Assembly	Main Arm Assembly[1] (length)(mm) (includes 400-ES)	Secondary Arm Assembly (includes 400-ES)	Arm Assembly Less Rod and Shoe	Rod & Shoe Assembly[2] (length)(mm)
50BC/51	400-1	400-1M (11)(279)	400-111	400-1W	400-11 (8-11/16)(221)
TJ50BC/TJ51	400-1A		400-121		400-11A (12-1/2)(318)
PA50BC/PA51	400-6		400-116		400-16 (8-11/16)(221)
PA50BC/PA51C[3]	400-6A		400-116A		400-16A (12-1/2)(318)
51	400-26 (Tri pack includes 400-1 plus 289A plate)				

1. C/L to C/L length shown in parentheses.
2. C/L of connecting link to end of rod shown in parentheses.
3. For 180° door swing when using a special template for doors hung on 6" to 8" (162mm to 203mm) wide throw hinges.

PARTS LIST

STAINLESS STEEL ARM ASSEMBLIES

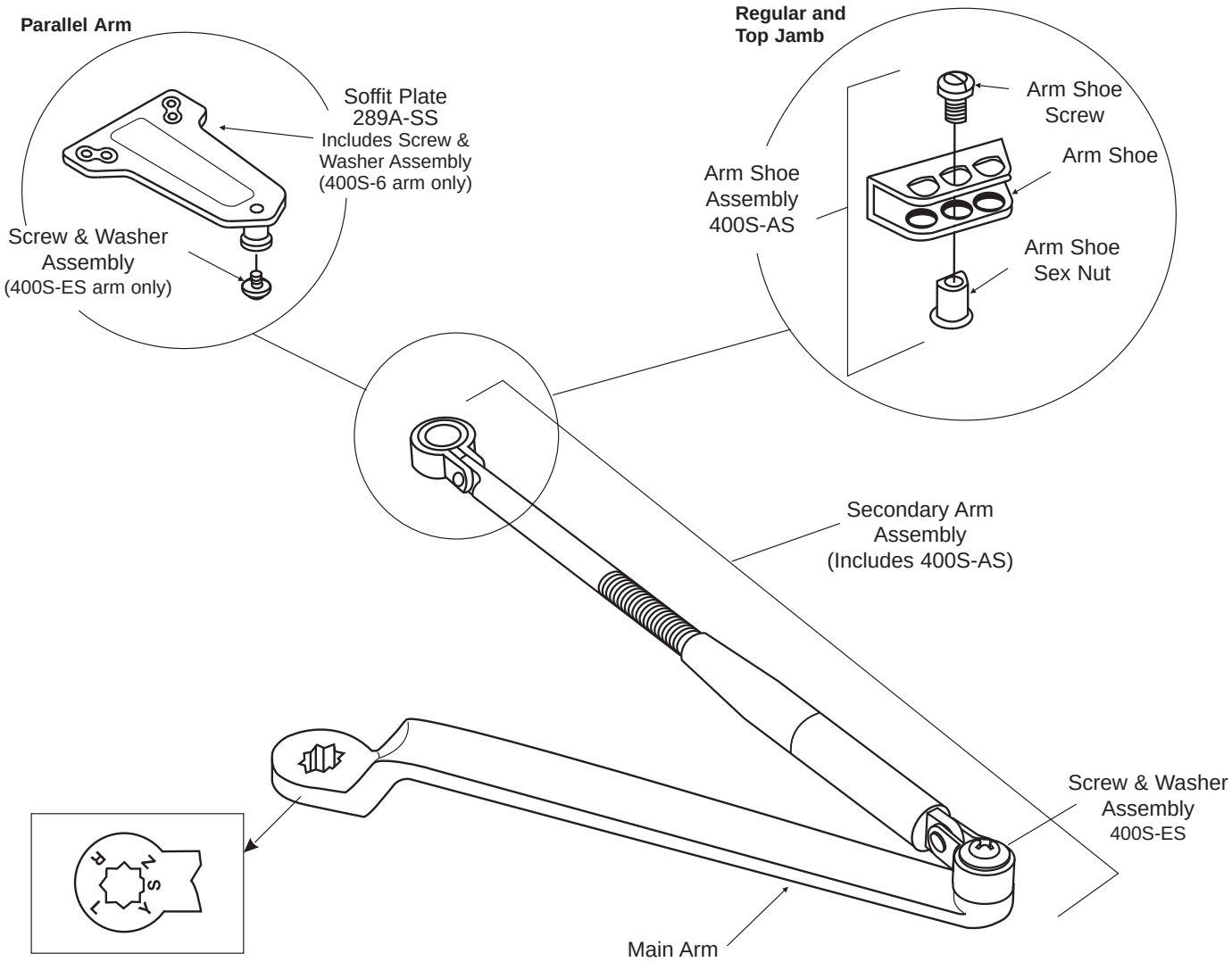

Note: Mounting hardware included with all parts orders.

Closer Series	Complete Arm Assembly	Main Arm Assembly[1] (length)(mm) (Includes 400S-ES)	Secondary Arm Assembly (Includes 400S-ES)	Adjust Rod & Shoe[2] (length)(mm) (Includes 400S-ES)
51S	400S-1	400S-1M (11)(279)	400S-111	400S-11 (8-11/16)(221)
TJ51S	400S-1A		400S-121	400S-11A (12-1/2)(318)
PA51S	400S-6		400S-116	400S-16 (8-11/16)(221)

1. C/L to C/L length shown in parentheses
2. C/L to end of rod length shown in parentheses.

PARTS LIST

HOLD-OPEN ARM ASSEMBLIES

400-13 Holder Shoe & Loop Assembly

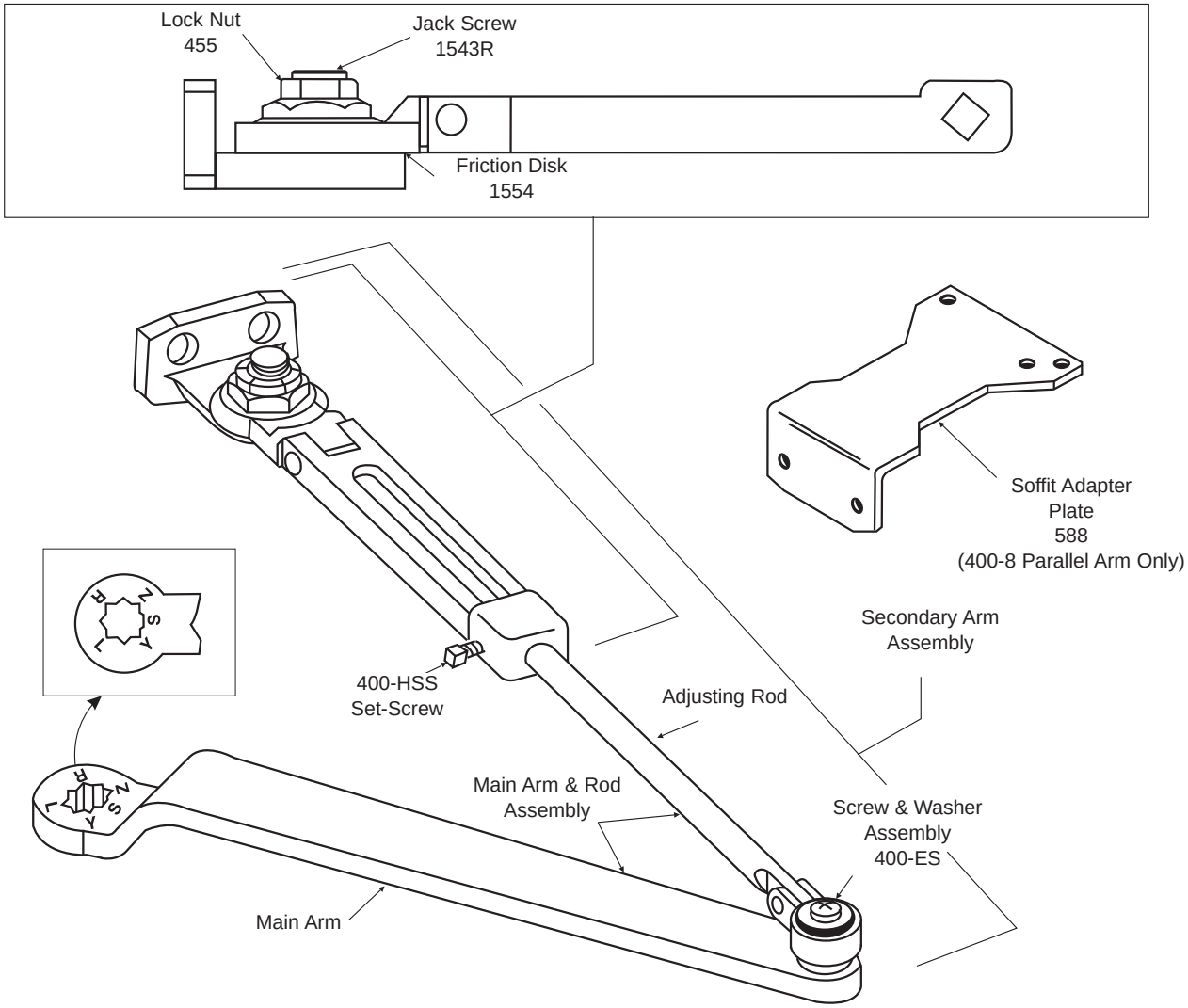

Note: Mounting hardware included with all parts orders.

Closer Series Assembly	Complete Arm Assembly	Main Arm[1] (Length)(mm) (Includes 400-ES)	Secondary Arm (Includes 400-ES)	Main Arm & Rod Assembly	Holder Shoe & Loop Assembly	Adjusting Rod[2] (Length)(mm)
150BC/151	400-3/400-8[3]	400-1M (11)(279)	400-113/400-118	400-3W	400-13	400-31 (7-3/8)(187)
TJ150BC/TJ151	400-3A		400-123	400-3WA		400-31A (10-13/16)(275)

400-18 = Holder Shoe & Loop Assembly (400-13) with soffit adapter plate (588)

1. C/L to C/L length shown in parentheses.
2. C/L of connecting link to end of rod shown in parentheses.
3. Same as 400-3 but includes #588 soffit adapter plate.

PARTS LIST

RIGID PARALLEL ARM ASSEMBLIES

Non Hold-Open Arm Shown

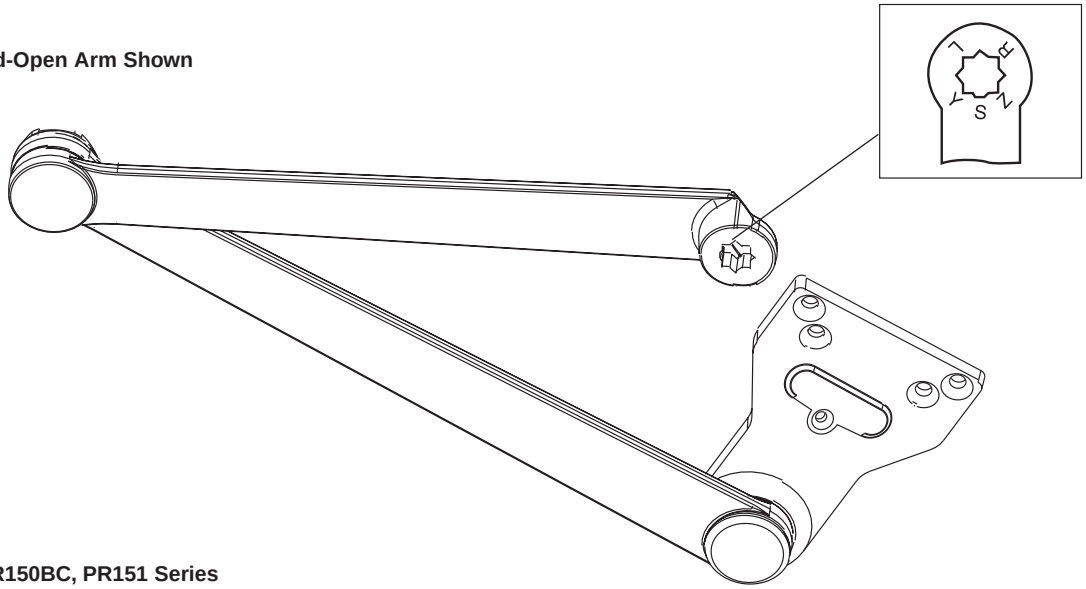

PR150BC, PR151 Series
Hold-Open

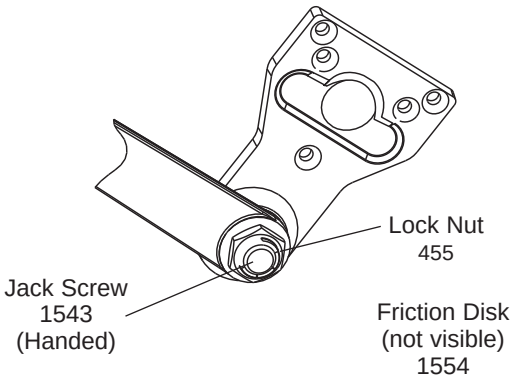

Note: Mounting hardware included with all parts orders.

Closer Series	Complete Arm Assembly	Jack Screw
Non - Open	PR400-5	N/A
Hold-Open	PR400-8R (Right Hand)	1543R
	PR400-8L (Left Hand)	1543L

PARTS LIST

HOLDER/STOP ARM ASSEMBLIES

Hold-Open Arm Shown

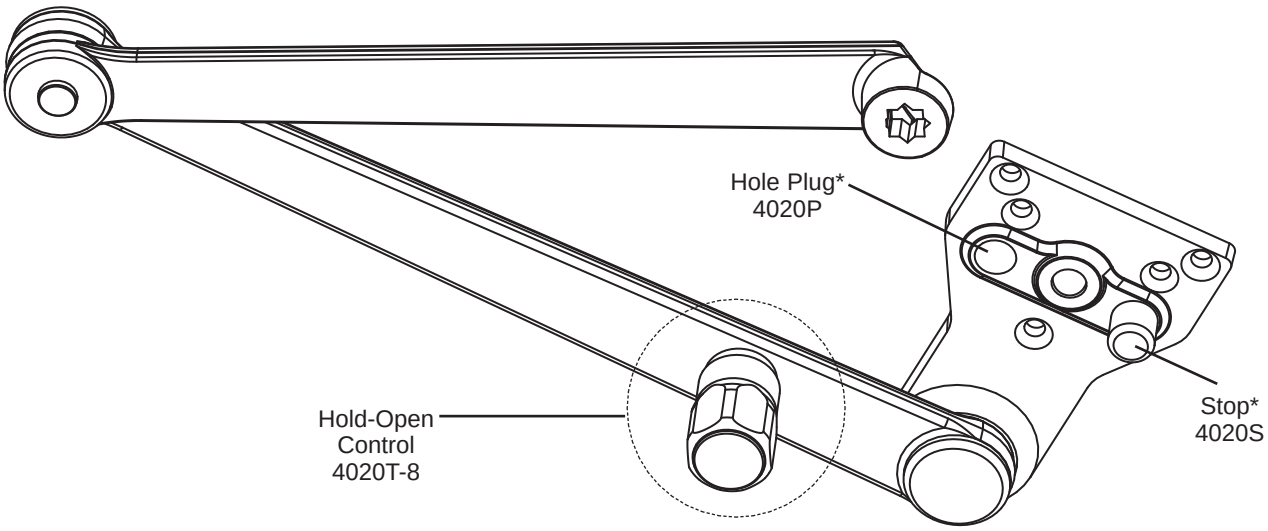

Note: Mounting hardware included with all parts orders.

Closer Series	Arm Function	Complete Arm Package
5020BC/5121	Non Hold-Open	4020-5
5020BCT/5121T	Thumbturn Hold-Open	4020T-8

*** These parts and screw pack are included with complete arm assemblies.**

PARTS LIST

HOLDER/STOP SPRING ARM ASSEMBLIES

Non Hold-Open Arm Shown

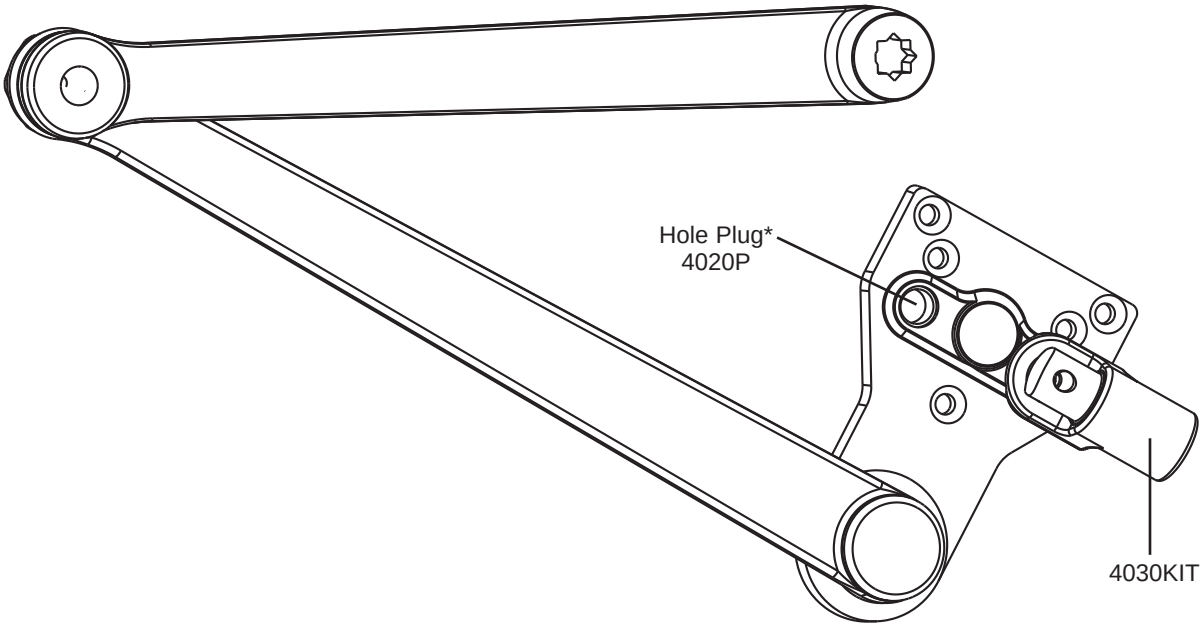

Note: Mounting hardware included with all parts orders.

Closer Series	Arm Function	Complete Arm Package
5030BC/5131	Non Hold-Open	4030-5
5030BCT/5131T	Thumbturn Hold-Open	4030T-8

*** These parts and screw pack are included with complete arm assemblies.**

PARTS LIST

LOW PROFILE ARM ASSEMBLIES

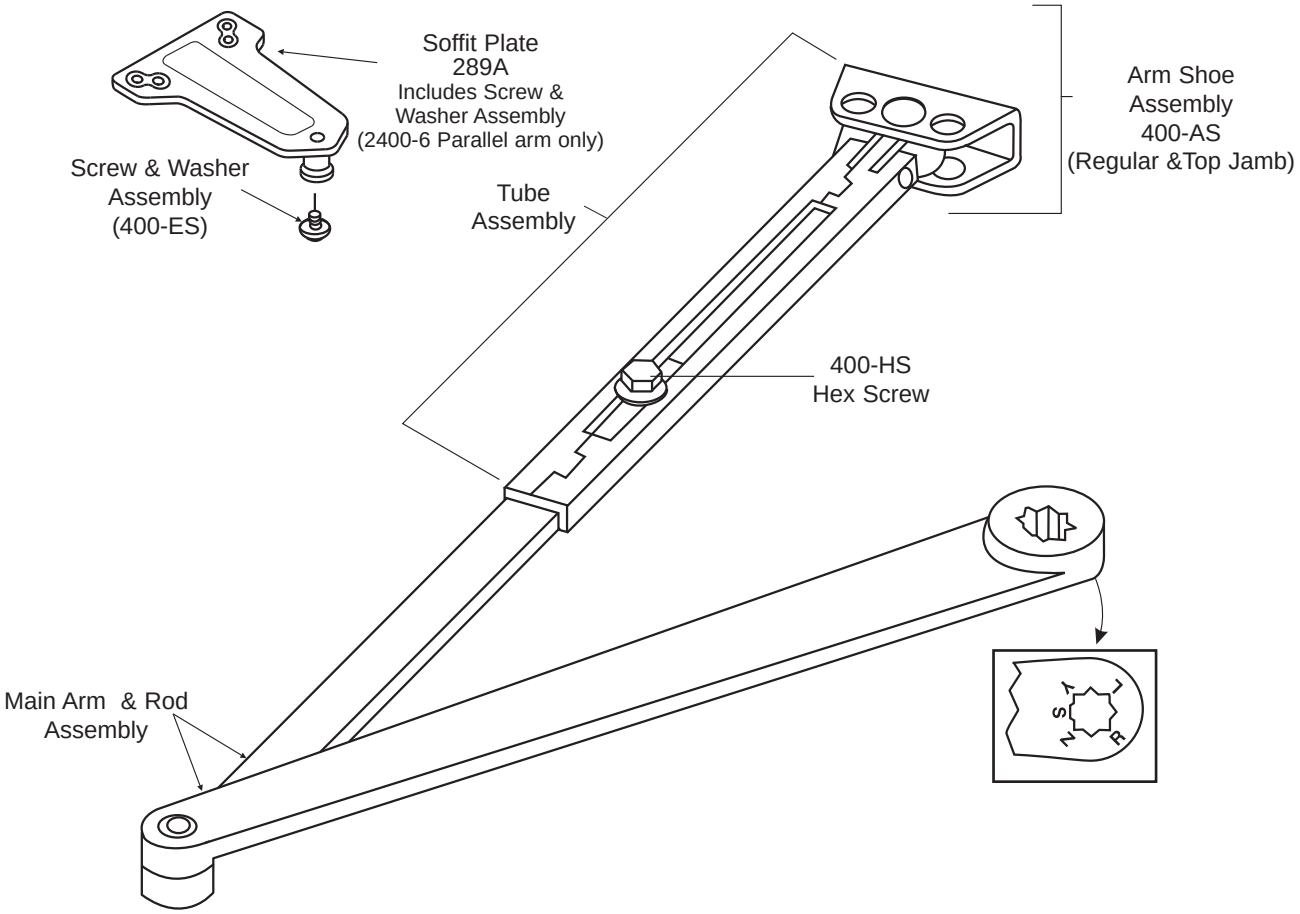

Note: Mounting hardware included with all parts orders.

Arm Application	Complete Arm Assembly	Main Arm & Adjusting Rod Assembly	Tube & Shoe/Soffit Assembly
Regular Arm	2400-1	2400-1MR	2400-1TS (With 400-AS)
Top Jamb	2400-1A		2400-6TS (With 289A)
Parallel Arm	2400-6		

PARTS LIST

UNI STOP™ PARALLEL ARM ASSEMBLIES

Parallel arm hold-open & non hold-open series

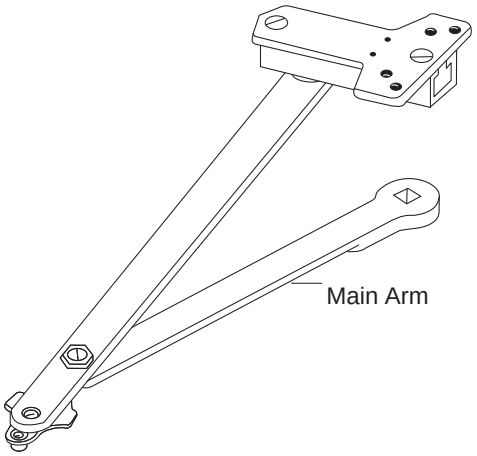

Non Hold-Open

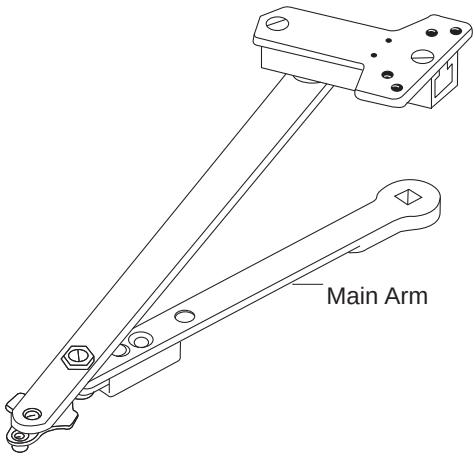

Hold-Open

Door Width (cm)	Main Arm Length* (mm)	Complete Arm Assembly	
		Non Hold-Open	Hold-Open
28"-32" (71-81)	9-1/2" (241)	6100-11	6100-1
33"-41" (84-104)	11" (279)	6100-13	6100-3
42"-48" (107-122)	12-1/2" (318)	6100-14	6100-4

*** Center to center length.**

Note: Mounting hardware shipped with all parts orders (this includes 6190 bracket).

PARTS LIST

UNI STOP™ TOP JAMB ARM ASSEMBLIES

Top jamb hold-open & non hold-open series

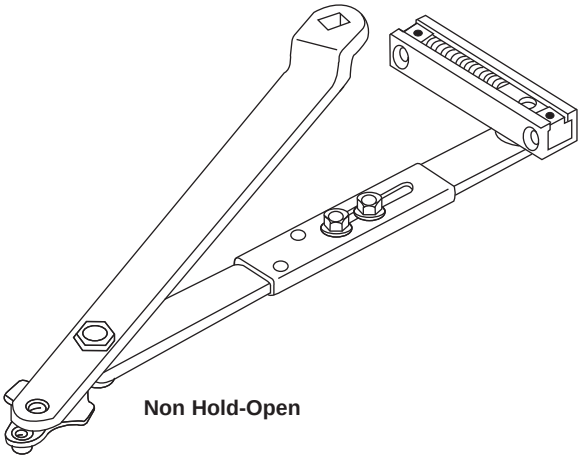

Non Hold-Open

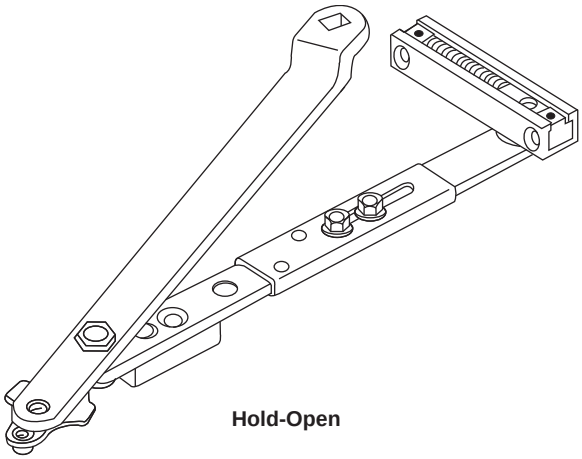

Hold-Open

Complete Arm Assembly		For Frame Reveals (mm)
Non Hold-Open	**Hold-Open**	
J6100-4	J6100-7	2-1/8" - 3-1/4" (54 - 83)
J6200-4	J6200-7	1/2" - 2" (13 - 51)
J6400-4	J6400-7	3-3/8" - 4-1/4" (86 - 108)
J6500-41	J6500-71	4-3/8" - 5-3/8" (111 - 137)
J6500-42	J6500-72	5-1/2" - 6-3/8" (140 - 162)
J6500-43	J6500-73	6-1/2" - 7-3/8" (165 - 187)
J6600-4	J6600-7	0 - 3/8" (0 - 10)

SUGGESTED SPECIFICATIONS

51 SERIES

Closers for interior and exterior doors shall be full rack-and-pinion type with cast aluminum alloy shell. Closers shall be surface mounted and shall project no more than 2-7/8" from the surface of the door. Closers shall be non-handed to permit installation on doors of either hand. Closer fluid shall contain lubricity and anti-oxidation agents. Closer fluid shall maintain stable viscosity to allow door closer to perform in temperatures ranging from extremely high to as low as -40°F. Closers shall have multi-size spring power adjustment to permit setting of spring power for sizes (1 through 4) (3 through 6). Closers shall have two non-critical valves, hex key adjusted, to independently regulate sweep and latch speed. (Closers shall have adjustable backcheck cushioning controlled by a hex key adjusted valve.) Closer power shall be adjustable using 1/8" hex key.

[Closers shall have adjustable delayed-action closing controlled by a hex key adjustable valve.]

[Closers shall be highly corrosion resistant and shall have all external body components of aluminum, zinc alloy or stainless steel material and all stainless steel fasteners.]

(Closers shall be provided with a full molded cover.)

Regular arm and top jamb closers shall have a non hold-open shoe permitting 15% (+/- 7-1/2%) power adjustment. ** [51] [51BF] [51S].

**For special arms insert the appropriate specification from page 36.

50BC SERIES

Closers for interior and exterior doors shall be full rack-and-pinion type with cast aluminum alloy shell. Closers shall be surface mounted and shall project no more than 2-7/8" from the surface of the door. Closers shall be non-handed to permit installation of doors of either hand. Closer fluid shall contain lubricity and anti-oxidation agents. Closer fluid shall maintain stable viscosity to allow the door closer to perform in temperatures ranging from extremely high to as low as -40°F. Closers shall be sized for each door. Closers shall have two non-critical valves, hex key adjusted, to independently regulate sweep and latch speed. [Closers shall have adjustable backcheck cushioning controlled by a hex key adjusted valve.]

[Closers shall have adjustable delayed action closing controlled by a hex key adjusted valve.]

(Closers shall be provided with a full molded cover.)

Regular arm and top jamb closers shall have a non hold-open shoe permitting 15% (+/- 7-1/2%) power adjustment.** [50BC].

**For special arms, insert the appropriate specification from page 36.

SUGGESTED SPECIFICATIONS CONT.

UNI STOP™ ARM

Door closers shall have built in-door stop [and holder] effective at a single point selected at installation, from 85° - 115° in five - degree increments. Door stop shall be cushioned by a shock-absorbing heavy - duty spring action effective at the [soffit plate] [arm shoe] pivot. [Closers shall be provided for parallel arm installation using rigid steel main arm and secondary arm lengths proportional to the door width to reduce racking at the hinge/pivot.] [Closers shall be provided for top jamb installation using steel, rigid main arm and telescoping secondary arm adequate for the frame reveal of the openings.] Arms shall be non-handed. Arms shall have a ball and detent hold-open mechanism incorporating an on/off hold-open selector and a hold-open tension adjustment.

HOLDER/STOP ARM

Door closers shall have built-in door stop [and holder] effective at a single point selected at installation, from 85° - 110° in five degree increments. Door stop mechanism shall be reversible and attached to soffit plate. [Hold-open mechanism shall have engage/disengage selector actuated by thumbturn.] Closers shall be provided for parallel arm installation using rigid forged steel main and secondary arm.

HOLDER/STOP SPRING ARM

Door closers shall have built in door stop [and holder] effective at a single point selected at installation, from 85° - 110° in five degree increments. Door stop mechanism shall be reversible and attach to soffit plate. [Hold-open mechanism shall have engage/disengage selector actuated by thumbturn.] Closers shall be provided for parallel arm installation using rigid forged steel main and secondary arm.

HOW TO ORDER

ORDERING INFORMATION

From this outline select the Door Closer & Holder Stop that you require.

Prefix	Function	5	Size	Suffix	X Finish
None - Closer installs Regular Arm, Parallel Arm or Top Jamb (reveals) 0" to 2-7/8" (0 to 73mm). **TJ** - Closer installs Top Jamb only for reveals in excess of 2-3/4" (70mm). **PA** - Closer installs Parallel Arm only when ordered with the standard soffit bracket or for special installations. **PR** - Rigid Parallel Arm installs Parallel Arm only. Specify hand for Hold-Open functions. **UNI** - UNI-Stop™ Parallel Arm (specify door width) Standard frame reveals 7/8" to 4-5/8" (48 to 117mm). **UNIJ** - UNI-Stop™ arm top jamb (specify reveal).	**Function:** Determines the Arm Function.		**Size:** Determines Closer Size.	**Suffix:** Determines Miscellaneous Features.	See page 2.
	None - Standard NHO. **1 -** HO Arm. **2 -** Low Profile Arm, NHO Only.	**Description:** Defines the Basic 50BC or 51 Series Door Closer.	**1** - Sizes 3 - 6 **1BF** Sizes 1 - 4 **2** - ANSI Size 2 **3** - ANSI Size 3 **4** - ANSI Size 4 **5** - ANSI Size 5 **6** - ANSI Size 6	**S** - Corrosion resistant. **CB** - Coupon booth bold open (Handed). **DL** - Delayed Action Closing (available in place of backcheck). Size 1(BF) only. **BC** - Backcheck (standard). **H** - Hospital hold-open (handed) 153BCH and 154BCH only. **S** - Corrosion resistant. Size 1(BF) only. **CB** - Coupon booth hold-open. 52BCCB and 53BCCB only. Handed. (Specify RA, PAN TJ). **TB** - Telephone Booth - 52BCTB only (Specify RA, PAN TJ).	

51	3	1	Suffix	X Finish
First Two Digits: Determine basic Holder/Stop.	**Third Digits:** First two digits determine basic Holder/Stop.	**Fourth Digit:** Determines Closer Size.	**Suffix:** Determines Hold-Open or Delayed Action option.	See page 2.
	2 - Holder/Stop **3** - Holder/Stop Spring	**1** - Sizes 3 - 6 **1BF** - Sizes 1 - 4 **2** - ANSI Size 2BC **3** - ANSI Size 3BC **4** - ANSI Size 4BC **5** - ANSI Size 5BC **6** - ANSI Size 6BC	**None** -Non Hold-Open **T** - Thumbturn Hold-Open **DL** - Delayed Action Closing (available in place of backcheck)	

NOTES

NOTES

online literature and templates

For the latest information on Yale Commercial Lock and Hardware products, visit our website at www.yalecommercial.com.

Click on the "Literature" button to find:

- Catalogs
- Parts manuals
- Templates
- Specifications
- Installation instructions

Yale® customers can click on the ebusiness symbol on the website to register for an ebusiness account to:

- Check the status of orders
- Check availability of Warehouse and Quick-Ship items
- Track your order and confirm delivery
- Receive email notification of template changes

And More...

www.yalecommercial.com

Yale Commercial Locks and Hardware

Address: 1902 Airport Road, Monroe, NC 28110 USA

Tel: 1-800-438-1951 • *Fax:* 1-800-338-0965 • www.yalecommercial.com

Yale-Corbin Canada Ltd.

Address: 6940 Edwards Boulevard, Mississauga, Ontario, Canada L5T 2W2

Tel: 1-800-461-3007 • *Fax:* 1-800-461-8989 • www.yalecorbin.on.ca

Yale®, Yale Security Inc.® Tri Style®, Uni Stop™ are registered trademarks of Yale Security Inc. Other product brand names may be trademarks or registered trademarks of their respective owners and are mentioned for reference purposes only. Copyright© 2001, 2004 Yale Security Inc. All rights reserved. These materials are protected under US copyright laws. All contents current at time of publication. Yale Security Inc. reserves the right to change availability of any item in this bulletin, its design, construction, and/or its materials.

The ASSA ABLOY Group is the world's leading manufacturer and supplier of locking solutions, dedicated to satisfying end-user needs for security, safety and convenience.

An ASSA ABLOY Group brand

ASSA ABLOY

42096-MA-12.0-12/04R