Yale®

GRADE 2 LEVER CYLINDRICAL LOCKSETS

5300LN SERIES

CATALOG

An ASSA ABLOY Group brand

ASSA ABLOY

INNOVATION AND INSPIRATION

Thanks to state-of-the-art engineering and innovative thinking, Yale's 5300LN is truly a source of inspiration. With three lever designs and a choice of eleven different finishes, including three PVD lifetime finishes, you've got the freedom and ability to match any décor.

But looks aren't everything. This revolutionary Grade 2 cylindrical lockset boasts patented design features such as a vandal-resistant Free Wheeling lever mechanism and adjustable door thickness (patent #6,131,970) that makes installation a breeze. Through-bolting gives the 5300LN a secure fit that resists shaking and rattling. And with a lifetime warranty against lever sag, you never have to worry about your pleasing aesthetics becoming a displeasing eyesore.

INSTALLATION

Fits ANSI Spec. 115.2, which covers Hollow Metal Doors and Frame Preparation for Cylindrical Locksets.

FIRE LISTINGS

UL - cUL Fire Label for all functions up to 3-hour doors.

A.D.A.

The 5300LN meets accessibility guidelines of the Americans with Disabilities Act and the requirements of the Uniform Federal Accessibility Standards and ANSI 117.1, all requiring ease of accessibility for the handicapped.

DOOR THICKNESS

- Utilizing Yale's patented door thickness adjustability (patent #6,131,970), locksets are pre-assembled for 1-3/8"(35mm) - 1-3/4" (44mm) doors.
  - Preset at factory for 1-3/4" (44mm).
- For 2" (51mm) or 2-1/4" (57mm) thick doors please specify door thickness on order.

ISO 9001

Designed and manufactured in a certified ISO 9001 facility.

FREE WHEELING LEVER TRIM

All 5300LN functions feature the patented (Patent No. 4920773) Free Wheeling lever mechanism, similar to the 5400LN cylindrical lock. When the outside lever is locked, it will rotate freely up and down while remaining securely locked.

WARRANTY

The 5300LN Key-in-Lever Cylindrical lock carries a one-year warranty. Likewise, the lockset carries a lifetime warranty against lever sag and lever spring breakage. Ask your Yale sales representative for complete warranty information.

ANSI

ANSI A156.2, 1996 Series 4000 Grade 2.

PVD LIFETIME FINISH

Physical Vapor Deposition (PVD) is a technologically advanced finish coating that provides the ultimate surface protection against environmental elements and everyday wear and tear. PVD matches clear coated finishes in appearance, yet surpasses them in durability. Yale warrants all its PVD finishes against corrosion, tarnish, wear, discoloring and peeling for the lifetime of the part to which it has been applied. Ask your sales representative for specific warranty information.

CONTENTS

Introduction 2
Lockset Features 3
Lever Designs 4
Lockset Functions 5-6
Cylinders 7-8
Latchbolts 9
Strikes 10
Suggested Specification 11
Ordering Information 11

FINISHES

ANSI Code	Finish
605*	Bright Brass, PVD
606*	Satin Brass, PVD
609	Satin Brass, Blackened, Satin Relieved, Clear Coated
612	Satin Bronze, Clear Coated
613	Satin Bronze, Oxidized and Oil Rubbed
613e*	Satin Bronze, Oxidized and Oil Rubbed, PVD
616	Satin Bronze, Blackened, Satin Relieved, Clear Coated
619	Satin Nickel Plated, Clear Coated
625	Bright Chrome Plated
626	Satin Chrome Plated
693	Black Powder Coat

***PVD finish standard on 605 and 606. Available as an option on 613 (as 613e) for customers desiring a non-wearing finish.**

LOCKSET FEATURES

Full Featured Grade 2 Key-in-Lever Lockset Offering:

- Patented Free Wheeling lever mechanism for increased vandal resistance
- 11 finish options
- 3 lever designs
- 11 functions
- Adjustable door thickness: (Patent #6,131,970)
  - Pre-assembled for 1-3/8" (35mm) and 1-3/4" (44mm) doors
  - Preset at factory for 1-3/4" (44mm)
  - Special order available for 2" (51mm), 2-1/4" (57mm)
- 3-1/2" rose covers ANSI/DHI door prep A115.18-1994 “Spider Cut Out”
- Through-bolts solidly through the door, providing greater stability
- Wide range of Yale® 6-pin cylinder options:
  - Standard, Interchangeable core, High Security and Yale® KeyMark® patented keyway cylinders (see page 7)
- Competitive keying options:
  - Standard cylinders with Schlage® C and Sargent® LA keyways
  - Levers which accept interchangeable core cylinders by Best®, Corbin Russwin, Schlage®, Medeco® and ASSA®
- Lifetime warranty against lever sag and lever spring breakage

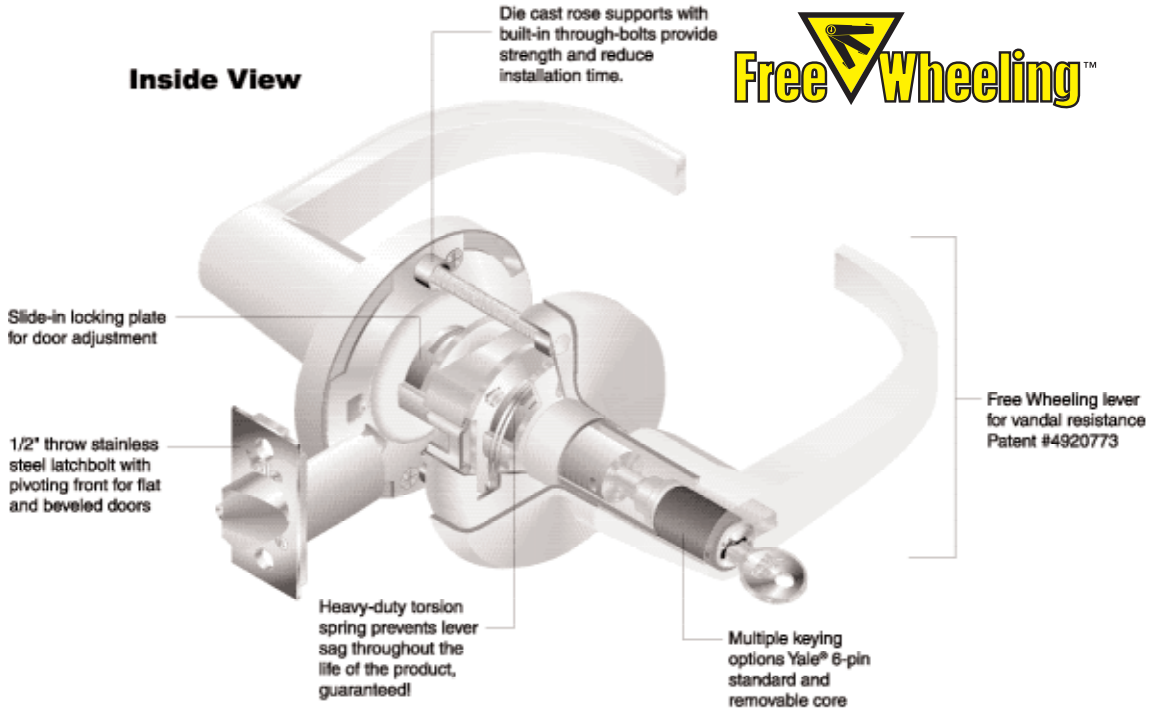

5300LN SERIES DESIGNS

AUGUSTA AU

Lever: Cast Solid
Rose: Cold Forged Brass, Bronze

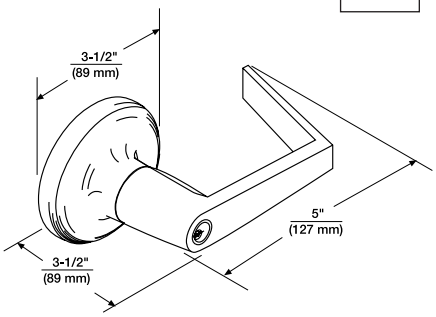

MONROE MO

Lever: Cast Solid
Rose: Cold Forged Brass, Bronze

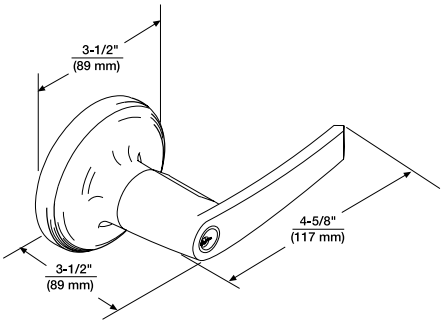

PACIFIC BEACH PB

Lever: Cast Solid
Rose: Cold Forged Brass, Bronze

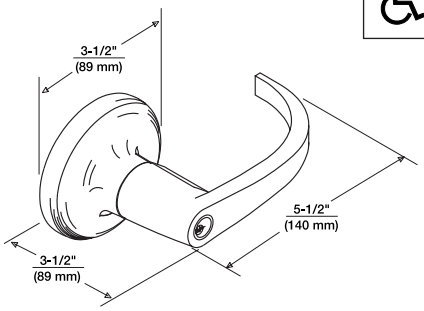

*****See page 7 & 8 to order interchangeable core cylinder.**
Dimensions are in inches (millimeters).

LOCKSET FUNCTIONS

5301LN (F75)

Passage or Closet Latch
- For doors that do not require locking.
- Either knob operates latchbolt at all times.

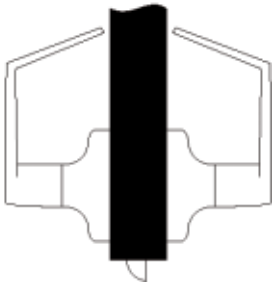

Outside Inside

5302LN (F76)

Privacy Bedroom or Bath Lock
- For lavatory or other privacy doors.
- Either lever operates latchbolt unless outside lever is locked by pushbutton inside.*
- Button automatically releases when inside lever is turned or door is closed.
- Emergency release in outside lever. Emergency key supplied. (P/N 14-5302-1053)
- Inside lever always active.

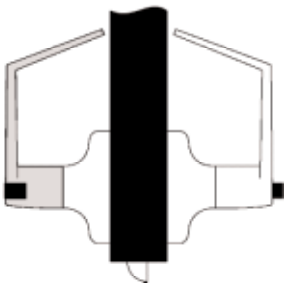

Outside Inside

5303LN (F77)

Patio or Privacy Lock
- For exit doors with limited entry.
- Deadlocking latchbolt.
- Either lever operates latchbolt unless outside lever is locked by pushbutton inside.*
- Button automatically releases when inside lever is turned or door is closed.
- Inside lever always active.

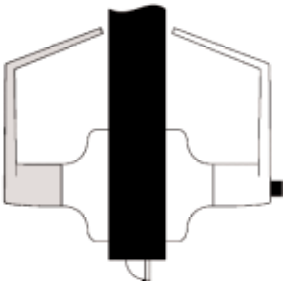

Outside Inside

5305LN (F86)

Storeroom or Closet Lock
- For use on storeroom, utility, exit doors.
- Deadlocking latchbolt.
- Latchbolt operated by lever inside, key in outside lever.
- Outside lever always locked.*

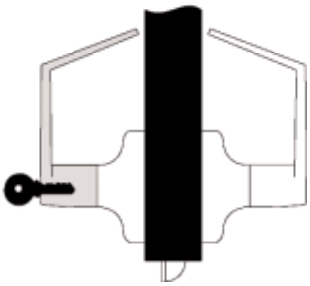

Outside Inside

5307LN (F109)

Entrance or Corridor Lock
- For entrance, general home or office doors.
- Deadlocking latchbolt.
- Either lever operates latchbolt (except when outside lever is locked from inside).*
- Pushing turn button in inside lever locks outside lever. (Automatically releases when inside lever is turned or key is rotated in locked outside lever.)
- Outside lever may be retained in locked position by pushing and rotating turn button 90° clockwise to a horizontal position; not released until turn button is manually returned to the vertical position.
- Latchbolt is operated by key in outside lever or by rotating inside lever.
- Inside lever always active.

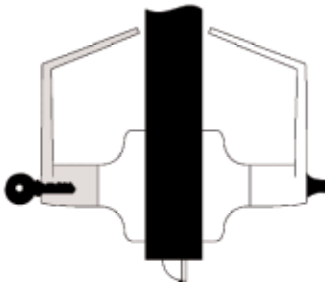

Outside Inside

***Lever handles are Free Wheeling in locked position. Shaded area denotes Free Wheeling lever.**

LOCKSET FUNCTIONS

5308LN (F84)

Classroom Lock
- For classroom or utility room doors.
- Deadlocking latchbolt.
- Either lever operates latchbolt (except when outside lever is locked by key).*
- Inside lever always active.
- Key releases outside lever.

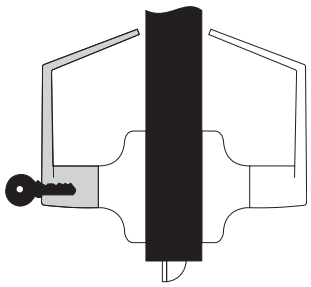

Outside Inside

5321LN (F80)

5421LN Communicating Lock
- For communicating or store entrance doors.
- Deadlocking latchbolt.
- Either lever operates latchbolt (except when key in either lever locks or unlocks the lever independently of the other).*
- Should be used only in offices or rooms with multiple entries.

(NOTE: Not available with I.C. core cylinders.)

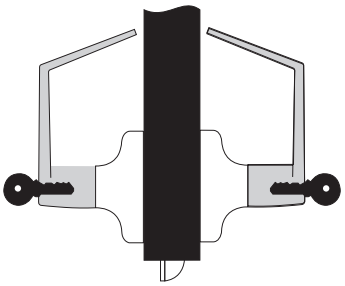

Outside Inside

5322LN (F90)

Dormitory Lock
- Deadlocking latchbolt.
- Either lever operates latchbolt (except when outside lever is locked by inside push-button or key in outside lever). Inside lever always active.
- When locked by button, the button automatically releases when inside lever is turned or door is closed.
- When locked by key, the automatic release is made inoperative and must be manually unlocked by key.

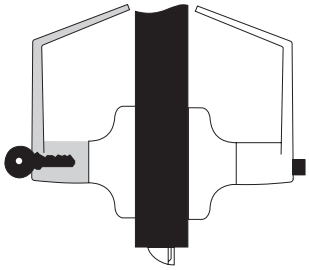

Outside Inside

5328LN

Exit Latch
- For twin communicating or exit doors where one side operation is required.
- Also when space is limited between door and switch panel.
- Deadlocking latchbolt.
- One lever operation.
- Blank rose.
- Should be used only where rooms have more than one entrance.

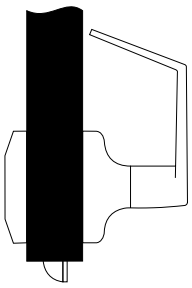

Outside Inside

5329LN

Communicating or Closet Lock
- For twin communicating or closet doors where one side operation is required or space between doors is limited.
- Deadlocking latchbolt.
- Inside lever operates latchbolt except when lever is locked by key.*
- Blank rose.
- Should be used only where rooms have more than one entrance.

(NOTE: Not available with I.C. core cylinders)

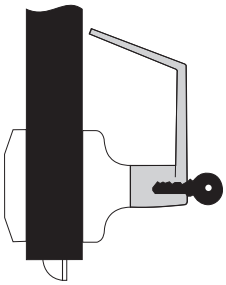

Outside Inside

355LN

Dummy Trim
- For non-operational levers use for decorative trim.
- Rigid lever.

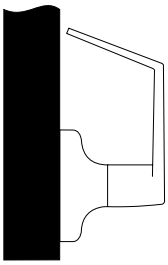

Outside Inside

***Lever handles are Free Wheeling in locked position. Shaded area denotes Free Wheeling lever.**

CYLINDERS

CYLINDER OPTIONS

The following selection guide indicates the correct key-in-lever cylinder for each locking segment.

Lockset Series: 5300LN		Types of Cylinder Mechanisms							
		Conventional		Patented Keyway		Security		High Security	
Cylinder Types	**Fixed Core**	**6-pin**	**7-pin**	**6-pin**	**7-pin**	**6-pin**	**7-pin**	**6-pin**	**7-pin**
	Key-In-Knob	1802	N/A	K402	N/A	5802	N/A	N/A	N/A
	Interchangeable Core								
	LFIC	1210	N/A	K800	N/A	5210	5220	N/A	N/A
	SFIC	N/A	N/A	K600	N/A	N/A	N/A	N/A	N/A

Refer to Yale® KeyMark® and/or Cylinders and Keys Catalog sections for all details and how-to-order examples.

Note: The 1802 Cylinder requires an adapter sleeve to fit in the 5300LN Lockset. (P/N 14-5305-9078-999)

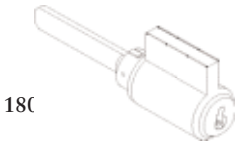

180

1210

Yale KeyMark PATENTED KEYWAY CYLINDERS

For those applications requiring patented key control, Yale's KeyMark® line of patented keyway cylinders provides the ultimate protection against unauthorized key duplication. *Yale* KeyMark's utility-patented Security Leg® keyway features increased resistance against picking and impressioning and can easily retrofit into existing systems. For further details and availability, refer to the separate *Yale KeyMark* catalog.

SECURITY CYLINDERS

The patented Yale® Security Cylinder (Patent No. 4638651) contains two independent locking mechanisms. The first is a traditional 6- or 7-pin tumbler mechanism with spool drivers for greatly increased picking resistance.

The second is an innovative 5-tumbler rotating disc mechanism with sidebar engagement. The rotating discs are spring loaded and block the bottom of the keyway.

Illustration

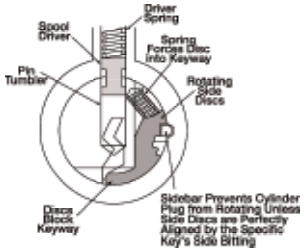

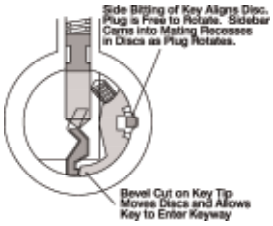

CYLINDERS

SCHLAGE® 108S / *108L ADAPTER KIT

Kit used to modify Schlage cylinder for fit in the 5300LN.

P/N 14-5407-9101-999 - 108S

P/N 14-5305-9078-999 - 108L*

Kit includes tailpiece and sleeve. To order the 108S adapter kit, use an “S” prefix (i.e., S-AU5307LN).

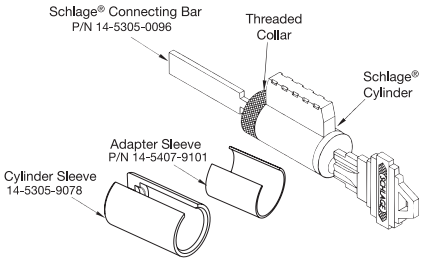

*** 2", 2-1/4" door.**

SCHLAGE® C & SARGENT® LA KEYWAYS

Illustration	List Number	Number of Pins
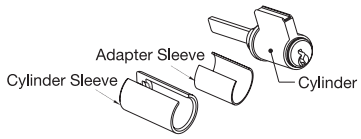	2802/2802L*	Schlage® 6-pin C Keyway O-Bitted
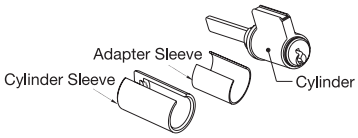	3802/3802L*	Sargent® 6-pin LA Keyway O-Bitted

*** 2", 2-1/4" door.**

*** The 2802 and 3802 cylinders require an adapter sleeve (P/N 14-5407-9101-999) and a cylinder sleeve (P/N 14-5305-9078-999) to fit the 5300LN lockset.**

LEVERS ACCEPTING COMPETITORS' INTERCHANGEABLE CORE CYLINDERS

Cylinder Type	Prefix	Ordering Example
Best® IC	B (i.e. B-AU, B-PB, B-MO)	B-PB5307LN x 626
Schlage® IC	SI (i.e. SI-AU, SI-PB)*	SI-AU5307LN x 603
Corbin Russwin IC	R (i.e. R-AU, R-PB, R-MO)	R-AU5307LN x 613
Medeco®, ASSA®	M (i.e. M-AU)**	M-AU5307LN x 605

***Schlage® option is not available with MO lever.**
****Medeco®, ASSA® option is available only with AU lever.**

LATCHBOLTS

PLAIN LATCHBOLTS

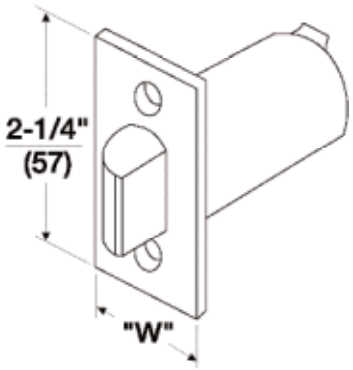

List No.	Front	"W" Front Width	Backset	Latch Diameter
378N	Universal	1" (25mm)	2-3/8" (60mm)	7/8" (22mm)
380BN (standard)	Universal	1-1/8" (29mm)	2-3/4" (70mm)	1" (25mm)*
3380BN	Universal	1-1/8" (29mm)	3-3/4" (95mm)	1" (25mm)

DEADLOCKING LATCHBOLTS

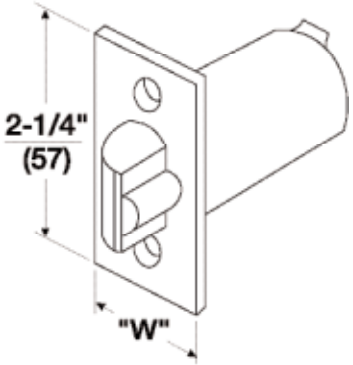

List No.	Front	"W" Front Width	Backset	Latch Diameter
380N	Universal	1" (25mm)	2-3/8" (60mm)	7/8" (22mm)
380AN (standard)	Universal	1-1/8" (29mm)	2-3/4" (70mm)	1" (25mm)*
3380AN	Universal	1-1/8" (29mm)	3-3/4" (95mm)	1" (25mm)

BACKSET EXTENSION LINKS

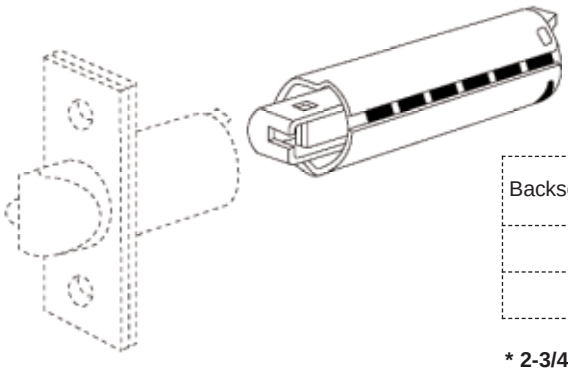

Backset Desired	Latchbolt	Order Extension List Number	Backset	Latch Diameter
5"	378N/380N	381N	2-3/8" (60mm)	7/8" (22mm)**
5"	380AN/380BN	381AN	2-3/4" (70mm)	1" (25mm)*

*** 2-3/4" backset latches have a 7/8" diameter with a 1/8" sleeve to accommodate 1" door preps.**

All latches have universal fronts, so they fit flat and beveled door fronts. When ordering latchbolts, specify Part No. x Finish (e.g., 679F12 x 626). Available in 606, 612, 613 and 626.

**** Add sleeve (P/N 14-0378-9001) if door is already prepped for 1" diameter hole.**

STRIKES

Yale® 5300LN Locksets are available with a variety of strike options. All strikes are located on the same vertical and horizontal center lines as the latchbolt. Some strikes are available in a variety of lip lengths to accommodate varying thickness of doors and frames. To determine the proper length of the lip, measure from the center line of the strike to the edge of the jamb and add 1/4" (6mm). All strikes are reversible.

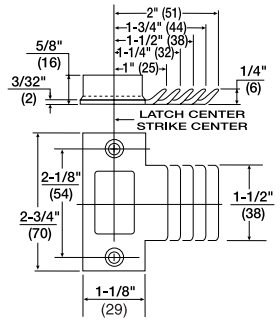

List No. 371 Strike
1-1/4" curved lip supplied standard. 1", 1-1/2", 1-3/4", and 2" curved lip lengths available by special order. Wrought strike box supplied.

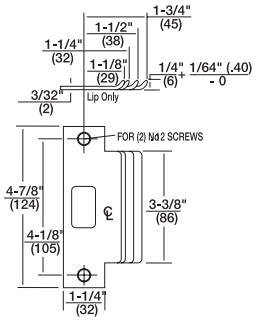

List No. 497 ANSI Strike
For door and frames with ANSI A115.2 preparations. 1-1/4" supplied standard. 1-1/8", 1-1/2", and 1-3/4" lip lengths available by special order.

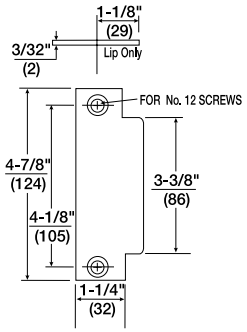

List No. 497B Blank ANSI Strike
Available to special order. Installed in frame with standard ANSI A115.2 preparation to replace the strike when the lockset has been removed from the door.

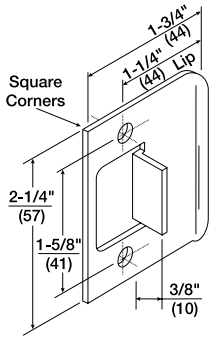

List No. 70S Full Lip Strike
With full lip anti-rattle tab.

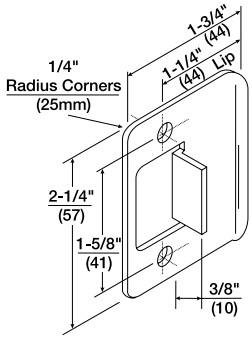

List No. 71S Full Lip Strike
1/4" radius. Similar in dimensions and function to the 70S Strike but with radius corners for easy mortising by power tools. Anti-rattle tab.

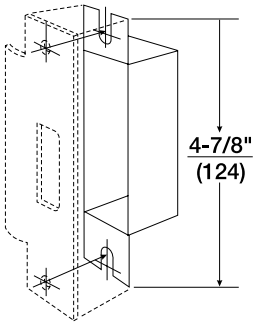

List No. 202 Strike Box
Available to special order. Specify 497 x 202.

ATTACHING SCREWS

For List Nos. 371, 70S, and 71S
#8-8-32 x 3/4" (19mm) Phillips flat head combination wood and machine screws.
P/N 81-2012-0416

For List Nos. 497 and 497B
#12-12-24 x 1" Phillips flat head combination wood and machine screws.
P/N 81-2012-0620

NOTE: When ordering strike or attaching screws individually, specify the finish required; i.e. 497 x 202 x 606; 81-2012-0620 x 606.

SUGGESTED SPECIFICATION

GRADE 2 LEVER CYLINDRICAL LOCKSETS

Lockset chassis shall be constructed of heavy-gauge steel and cast components, plated to protect against rust and corrosion. Locksets shall be adjustable for 1-3/8" (35mm) and 1-3/4" (44mm) or 2" (51mm) and 2-1/4" (57mm) door thickness.

Locksets shall be non-handed, and shall install easily without the need for specialized installation tools. Locksets shall have separate anti-rotation through-bolts in the 6 o'clock and 12 o'clock position outside the 2-1/8" face bore, and shall have no exposed mounting screws.

Locksets shall have solid one-piece, cast levers without plastic inserts, and shall be a minimum of 4-5/8" (117mm) in length. Levers shall operate independently and shall have inside and outside lever return springs. Outside levers on the keyed locksets shall be removable only when the designated key is in the cylinder. Vandal-resistant levers shall be offered as a standard feature in all locking functions and shall be Free Wheeling in the locked condition. Locksets that are rigid in the locked condition, or which require resetting (breakaway) are not acceptable.

The latchbolt shall be made of stainless steel.

All locksets shall carry a one-year mechanical warranty. Locksets shall carry a lifetime warranty against lever sag or lever spring breakage.

All locksets shall comply with the following certifications:
- UL 3-Hour Fire Rating
- ANSI A156.2 Series 4000, Grade 2
- ANSI A117.1 Accessibility Code
- ANSI A115.1B Preparation

All locksets shall be 5300LN Series Grade 2 Key-in-Lever Cylindrical Locksets as manufactured by Yale Commercial Locks and Hardware.

ORDERING INFORMATION

From this outline select the List Number for the Yale® 5300LN Series Cylindrical Lockset you require.

Design	Function	Latch	Strike	Cylinder	Door Thickness	Finish
See Page 4	See Pages 5-6	See Page 9	See Page 10	See Pages 7-8	See Page 2	See Page 2

Ordering Example:

Quantity	Design	Function	Latch	Strike	Cylinder	Door Thickness	Finish
100	AU	5307LN	380N	371	1802	1-3/4"	626

PACKING

Each box has a strike, paper template, combination wood and machine screws and easy-to-follow instructions. Cylinder functions supplied with two keys. Ten shelf boxes to a case.

online literature and templates

For the latest information on Yale Commercial Lock and Hardware products, visit our website at www.yalelocks.com.

Click on the "Literature" button to find:

- Catalogs
- Parts manuals
- Templates
- Specifications
- Installation instructions

Yale® customers can click on the ebusiness symbol on the website to register for an ebusiness account to:

- Check the status of orders
- Check availability of Warehouse and Quick-Ship items
- Track your order and confirm delivery
- Receive email notification of template changes

And More...

www.yalelocks.com

Yale Commercial Locks and Hardware

Address: 1902 Airport Road, Monroe, NC 28110 USA

Tel: 1-800-438-1951 • *Fax:* 1-800-338-0965 • www.yalelocks.com

Yale-Corbin Canada Ltd.

Address: 6940 Edwards Boulevard, Mississauga, Ontario, Canada L5T 2W2

Tel: 1-800-461-3007 • *Fax:* 1-800-461-8989 • www.yalecorbin.on.ca

Yale® and Yale Security Inc.® are registered trademarks of Yale Security Inc. Other product brand names may be trademarks or registered trademarks of their respective owners and are mentioned for reference purposes only. Copyright© 2001, 2003 Yale Security Inc. All rights reserved. These materials are protected under US copyright laws. All contents current at time of publication. Yale Security Inc. reserves the right to change availability of any item in this bulletin, its design, construction, and/or its materials.

The ASSA ABLOY Group is the world's leading manufacturer and supplier of locking solutions, dedicated to satisfying end-user needs for security, safety and convenience.

An ASSA ABLOY Group brand

ASSA ABLOY

42123-MA-15.0-7/03R