Yale®

Cabinet Locks, Deadlocks, Padlocks

Auxiliary Locks

CATALOG

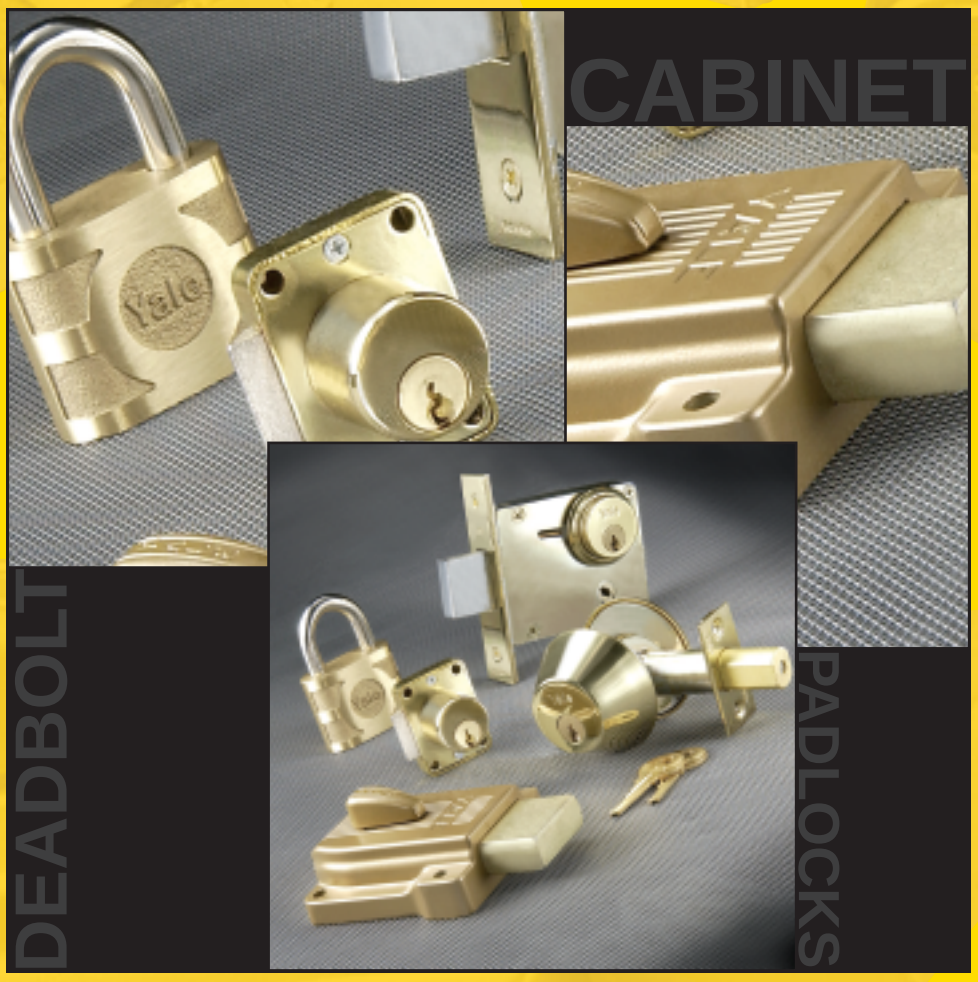

An ASSA ABLOY Group company

ASSA ABLOY

GENERAL INFORMATION

INTRODUCTION

Whether searching for a means of providing basic security or adhering to requirements of more sophisticated security systems, look to Yale® for a wide choice of auxiliary and special purpose locks designed to fit a wide range of applications.

Yale offers a complete line of high quality latchlocks, deadlocks, deadbolts and rim locks with standard and alternative rim cylinders. Cabinet locks, special purpose locks and padlocks round out a collection of products engineered to provide physical security and high levels of key control.

For over 160 years, *Yale* has been synonymous with superior locks. You can rely on *Yale* auxiliary and special purpose locks to provide the highest level of performance and dependability.

FINISHES

Yale auxiliary locks are available in either sprayed or plated finishes. Refer to product listings for finish availability. When applicable, specify finish by symbol only. Additional finishes are available. See product listings.

BHMA	Finish
605	Bright Brass, clear coated
606	Satin Brass, clear coated
611	Bright Bronze, clear coated
612	Satin Bronze, clear coated
613	Satin Bronze, oxidized and oil rubbed
625	Bright Chrome Plated
626	Satin Chrome Plated
629	Bright Stainless Steel*
630	Satin Stainless Steel*

*300 Series Mortise Deadlock Only

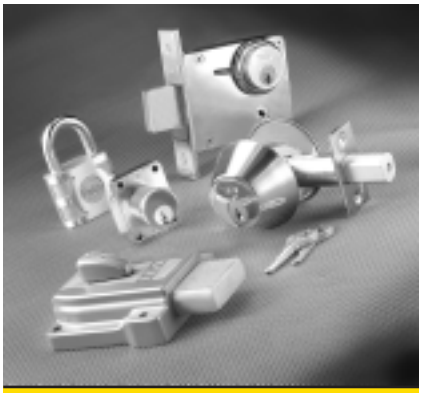

CONTENTS

Bored Deadbolts 3
Mortise Deadlock 9
Padlocks 11
Security Latchlocks 16
Heavy-Duty Latchbolts 18
Deadbolts & Deadlocks 19
Components 22
Cabinet Locks 23
Special Purpose Locks 25
How to Order 27

Padlock

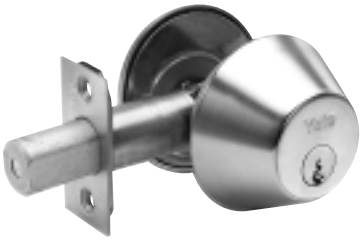

Auxiliary Bored Deadbolt

Cabinet Lock

Auxiliary Rim Lock

AUXILIARY BORED DEADBOLTS 3500/3600/3700

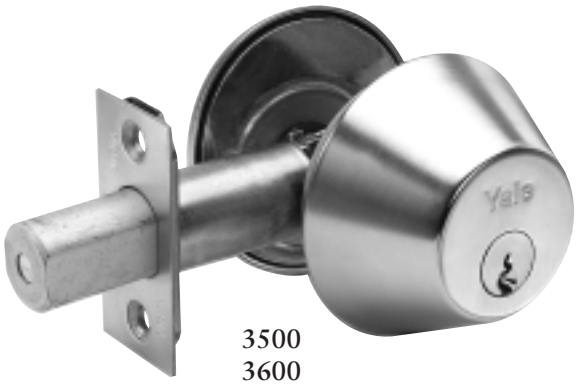

3500
3600

SPECIFICATIONS

- 3500-ANSI A156.5 Grade 2
- 3600-ANSI A156.5 Grade 1, UL10b
- 3700-UL10b Interchangeable Core

Non-handed: Can be installed on doors of either hand.

Door: Simple bored-hole installation 1-3/4" (44mm) thick, square or beveled doors, opening in or out. Parts available for doors up to 2-1/2" (64mm) thick.

Door Preparation: Can be installed on metal doors prepared to ANSI A115.13 Specifications.

Cross Bore Wood Doors: Standard – 2-1/8" (54mm) diameter.

Edge Bore: 1" (25mm) diameter.

Front Plate: See chart for details, rectangular fronts adjustable from flat to 1/8" (3mm) bevel. Brass or bronze material finished to match trim.

Front Plate Suffix*	Front Plate Size*
A	2-1/4" x 1"
B	2-1/4" x 1-1/8"

* Suffix the Model Number with one of the letters to order the front required.

3500 SERIES

Deadbolt: 1" (25mm) throw, 5/8" (16mm) wide x 3/4" (19mm) high extruded brass with hardened steel roller pin to resist sawing.

3600/3700 SERIES

Deadbolt: 1" (25mm) throw, 5/8" (16mm) wide x 3/4" (19mm) high stainless steel with hardened steel roller pin to resist sawing.

Deadbolt Assembly: Features toggle action lever, bolt cannot be pried back when locked. Operates smoothly by key or thumbturn. Mechanism – steel, zinc plated and dichromated.

3500 Series	
2-3/8" (60mm) Backset	#511
2-3/4" (70mm) Backset	#512
3600/3700 Series	
2-3/8" (60mm) Backset	#611
2-3/4" (70mm) Backset	#612

Cylinder Wrench Ring: Tapered to resist wrenching. High-density, rust-resistant alloy with brass or bronze scalp.

Connecting Screws: High tensile strength steel Socket Head Cap Screws (Security Torx® screws optional).

Blank Plate: Brass and bronze, Part No. 14-3342-0100-FIN.

Thumbturn and Rose: (Standard) Part No. 14-3511-0001-FIN.

Thumbturn: High-density, rust-resistant alloy plated.

Rose: Brass or bronze, steel reinforced.

Thumbturn and Rose (3540/3640) Part No. 14-3541-0001-FIN.

Thumbturn and Rose (classroom) Part No. 14-3561-0001-FIN.

Blank Rose: Brass or bronze; steel reinforced.
Part No. 14-3531-2009-FIN.

Strikes: #541 standard; 542, 543 or 545 available to order; finished to match trim.

Strike Reinforcer: #544 for use with #542 strike available to order.

Strike Boxes: Available to order. Model No. 31S, stainless steel for #542 strike; Model No. 109, steel for #541 and #543 strikes. Model No. 202 for #545 strike.

All dimensions are in inches (mm).

AUXILIARY BORED DEADBOLTS 3500/3600/3700 CONT.

3700

SPECIFICATIONS CONT.

Finishes: Available in the following plated finishes: 605, 606, 612, 613, 625, 626.

Packaging: One deadbolt to a shelf box including strike, keys, screws and installation instructions/ template.

3500/3600 SERIES

Cylinder/Keying: 1813* brass cylinder(s), 6-pin (5-pin active) with two RB8 keys x E1R (PARA) standard.

3700 SERIES

Cylinder/Keying: Uses interchangeable cores #1210 (6-pin), #1220 (7-pin).

Also available to accept Best® interchangeable core cylinders. Prefix Model No. with B (i.e. B3712B).

Note: For alternative cylinders refer to Yale® KeyMark® and/or Yale® Cylinder and Keys catalog section.

Cylinder Housing: High-density, rust-resistant alloy with brass or bronze scalp*.

*Tailpiece changes depending on function and door thickness.

AUXILIARY BORED DEADLOCKS 3500/3600/3700

DEADBOLTS

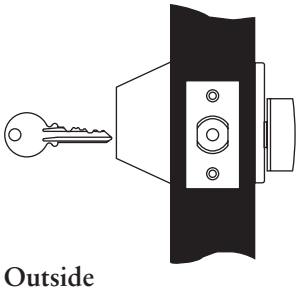

Outside Inside

3510/3610/3710

Cylinder x Thumbturn: Deadbolt operates by key outside, thumbturn inside.

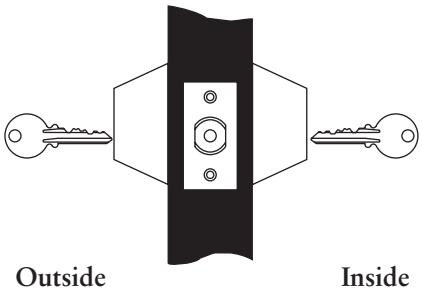

Outside Inside

3520/3620/3720

Cylinder x Cylinder: Deadbolt operated by key outside, key inside.

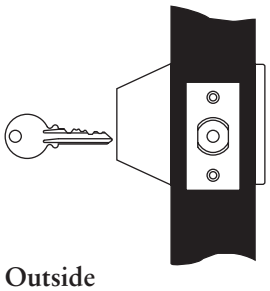

Outside Inside

3530/3630/3730

Cylinder x Blank Rose: Deadbolt operated by key outside only.

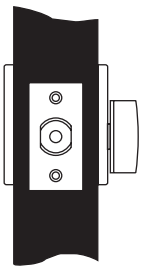

Outside Inside

3540/3640

Blank Plate x Thumbturn: Deadbolt operates by thumbturn inside only.

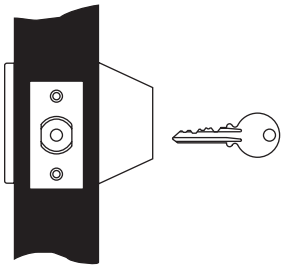

Outside Inside

3550/3650/3750

Blank Plate x Cylinder: Deadbolt operated by key inside only.

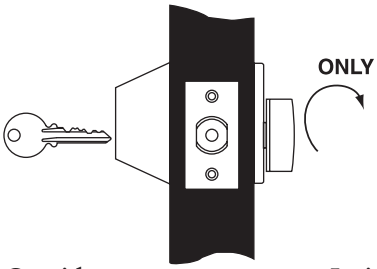

Outside Inside

3560/3660/3760

Cylinder x School Thumbturn: Deadbolt operated by key outside, deadbolt retracted by thumbturn inside. Thumbturn will not project deadbolt.

MODEL NUMBERS

Function	Backset	ANSI A156.5	Model Number*
Cylinder x Thumbturn	2-3/8"	E2151	3511/3611/3711 (A) (B)
	2-3/4"		3512/3612/3712 (A) (B)
Cylinder x Cylinder	2-3/8"	E2141	3521/3621/3721 (A) (B)
	2-3/4"		3522/3622/3722 (A) (B)
Cylinder x Blank Rose	2-3/8"	E2161	3531/3631/3731 (A) (B)
	2-3/4"		3532/3632/3732 (A) (B)
Blank Plate x Thumbturn	2-3/8"	E2191	3541/3641 (A) (B)
	2-3/4"		3542/3642 (A) (B)
Blank Plate x Cylinder	2-3/8"	E2101	3551/3651/3751 (A) (B)
	2-3/4"		3552/3652/3752 (A) (B)
Cylinder x School Thumbturn	2-3/8"	E2171	3561/3661/3761 (A) (B)
	2-3/4"		3562/3662/3762 (A) (B)

*Suffix the Model Number with one of the letters to order the front required.

AUXILIARY BORED DEADBOLTS 3500/3600/3700

COMPONENTS

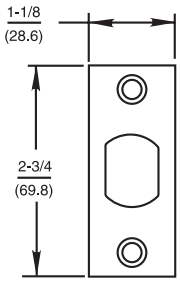

541
Standard

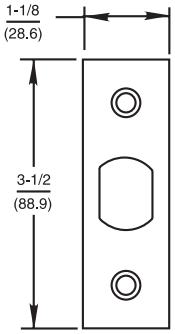

542
Optional

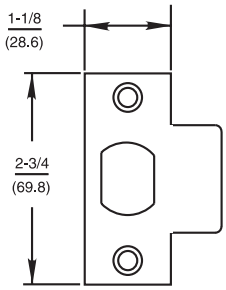

543
Optional

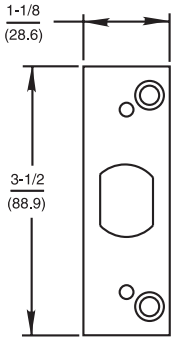

544
Optional Reinforcer for 542
(For wood frames furnished with two #10 x 3" wood screws)

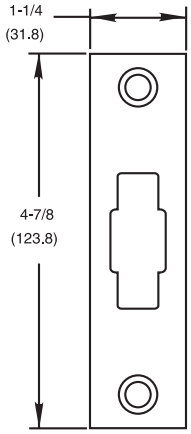

545
Optional

TAILPIECE

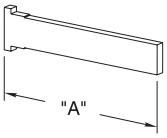

Part Number	Dim A
14-3511-1007	1.340
14-3521-1001	1.160
14-3521-1002	1.410
14-3521-1011	1.660
14-3531-1001	1.022
14-3721-1001	0.785
14-3721-1002	1.277
14-3541-1006	1.586

TAILPIECE APPLICATIONS

6-Pin Cylinders and 6/7-Pin I.C. Housings

Model Numbers	1-3/8" (35mm) Door	1-3/4" (44mm) Door	2" (51mm) Door	2-1/4" (57mm) Door
3511/3561	14-3511-1007		14-3521-1001	
3711/3761	NA	14-3511-1007		14-3521-1011
3521	14-3721-1001	14-3521-1001	14-3521-1002	14-3521-1011
3721	NA	14-3721-1001	14-3531-1001	14-3721-1002
3531/3551	14-3721-1001	14-3521-1001		14-3511-1007
3731/3751	NA	14-3521-1001	14-3511-1007	
3541				

SPACER RING

For 1-3/8" (35mm) door applications.
One spacer ring used for single cylinder functions; two spacer rings for double cylinder functions.
Part No. 14-3211-1083-200

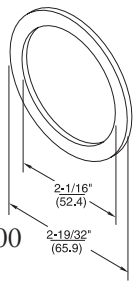

TAILPIECE APPLICATIONS

7-Pin Cylinders

Model Numbers	1-3/8" (35mm) Door	1-3/4" (44mm) Door	2" (51mm) Door	2-1/4" (57mm) Door
3511/3561	14-3521-1007		14-3511-1007	14-3521-1011
3521	14-3721-1001		14-3521-1001	14-3521-1002
3531/3551	14-3721-1001		14-3521-1001	

SCREW PACK APPLICATIONS

STANDARD HEX SOCKET SCREW PACK APPLICATIONS (LISTED X DOOR THICKNESS)

▲ Screw Part No.	▲ Screw Part No.	Screw	3511/ 3611	3711	3521/ 3621	3721	3531/ 3631	3731	3541/ 3641	3551/ 3651	3751	3561/ 3661	3761
14-3511-1006	2-1/2" (64mm)	14-3511-0100*	1-3/8–1-3/4 (35-44)	1-3/4* (44)			1-3/8–1-3/4 (35-44)	1-3/4* (44)				1-3/8–1-3/4 (35-44)	1-3/4* (44)
14-3511-1012	3" (76mm)	14-3511-0102*	2– 2-1/4 (51-57)	2– 2-1/4 (51-57)			2– 2-1/4 (51-57)	2– 2-1/4 (51-57)				2– 2-1/4 (51-57)	2– 2-1/4 (51-57)
14-3521-1005	3-1/4" (83mm)	14-3521-0104*			1-3/8–1-3/4 (35-44)					2-1/4 (57)	2 (51)		
14-3521-1006	3-3/4" (95mm)	14-3521-0106*			2– 2-1/4 (51-57)								
14-3721-1005	3-1/2" (89mm)	14-3721-0104*				1-3/4* (44)					2-1/4 (57)		
14-3721-1006	4" (102mm)	14-3721-0106*				2– 2-1/4 (51-57)							
14-3541-1002	1-1/2" (38mm)	14-3541-0100*							1-3/8 (35)				
14-3541-1003	1-7/8" (48mm)	14-3541-0101*							1-3/4* (44)				
14-3541-1004	2-1/8" (54mm)	14-3541-0102*							2 (51)				
14-3541-1005	2-3/8" (60mm)	14-3541-0103*							2– 2-1/4 (51-57)				
14-3551-1004	2-1/4" (57mm)	14-3551-0104								1-3/8 (35)			
14-3551-1003	2-5/8" (67mm)	14-3551-0105								1-3/4* (44)			
14-3751-1003	2-7/8" (73mm)	14-3751-0105								2 (51)	1-3/4* (44)		

* 3700 Series for use on 1-3/8" (35mm) thick doors. Requires spacers.

▲ Specify finish.

SCREW PACK APPLICATIONS

OPTIONAL SECURITY TORX® SCREW PACK APPLICATIONS

▲ Screw Part No.	▲ Screw Part No.	Screw	3511/ 3611	3711	3521/ 3621	3721	3531/ 3631	3731	3541/ 3641	3551/ 3651	3751	3561/ 3661	3761
14-3521-1003	3-1/4" (83mm)	14-3521-0100			1-3/8–1-3/4 (35-44)					2-1/4 (57)	2 (51)		
14-3521-1004	3-3/4" (95mm)	14-3521-0102			2– 2-1/4 (51-57)								
14-3721-1003	3-1/2" (89mm)	14-3721-0100				1-3/4* (44)					2-1/4 (57)		
14-3721-1004	4" (102mm)	14-3721-0102				2– 2-1/4 (51-57)							
14-3551-1002	2-1/4" (57mm)	14-3551-0100								1-3/8 (35)			
14-3551-1001	2-5/8" (67mm)	14-3551-0101								1-3/4* (44)			
14-3751-1001	2-7/8" (73mm)	14-3751-0101								2 (51)	1-3/4* (44)		

* 3700 Series for use on 1-3/8" (35mm) thick doors. Requires spacers.

▲ Specify finish.

AUXILIARY MORTISE DEADLOCK 300

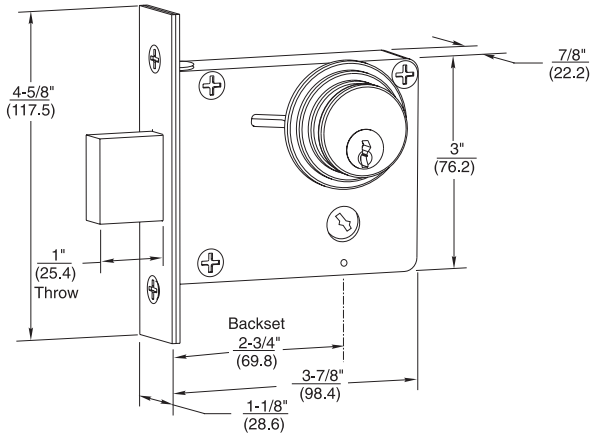

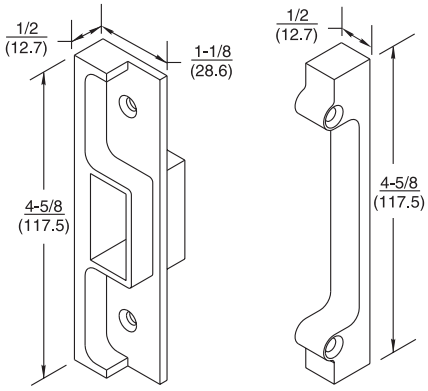

No. RS14 **No. RF14**

1160 Cam

SPECIFICATIONS

Applications: Mortise installation for 1-3/8" or 1-3/4" doors, unless otherwise specified. 3" maximum for thumbturn lock functions: 2-3/4" backset.

Hand: Universal; adjustable lock front to accommodate beveled or flat-edged doors.

Deadbolt: 1" throw, 1-1/4" x 1/2". Two hardened steel free-rotating pins make sawing through-bolt virtually impossible. Resists end pressure when thrown.

Armor Front: Prevents tampering with cylinder set screw(s).

Case: Heavy wrought steel, zinc plated and dichromated.

Armored Front: Brass, bronze or stainless steel.

Finishes: See page 2.

Keying and Cylinders: 1153 5-pin cylinder with 2 RB8 E1R (PARA) keys standard. For alternative cylinders refer to Yale® KeyMark® and/or *Yale* Cylinder and Keys catalog section.

Strike: No. 30S standard, 3-1/2" x 1-1/8", ANSI A115.5. No. 545 optional.

Wrought Box: No. 31S, wrought stainless steel, natural finish. Furnished to special order.

Rabbeted Front and Strike: Suffix 1/2 to Model No. (i.e. single cylinder, 314-1/2; double cylinder, 314-3/4). RF14 attachable rabbet piece, cast brass or bronze (4-5/8" x 1-1/8").

Rounded Front: Suffix "RF" to Model No. (i.e. 314RF, 314-1/4RF). Note: Rounded strike not available. Furnished regularly with No. 30S flat strike. No. 31S wrought box optional to order.

Standard Package for 1-3/8" and 1-3/4" Doors Includes: Installation instructions, 8-8-32 x 3/4" combination screws for wood or metal doors and frames, plus two keys. For other doors, specify door thickness.

CYLINDERS

Model Nos.	Pins	Core Assembly	Shell Assembly	Cam
1153	5,6,7			1160
1196	6	1210	1221	1160R
1196	7	1220	1213	1160R
1186A	5,6,7			1160

Cylinder Ring: No. 1135 regularly furnished unless otherwise specified.

All dimensions are in inches (mm).

AUXILIARY MORTISE DEADLOCK 300

DEADBOLTS

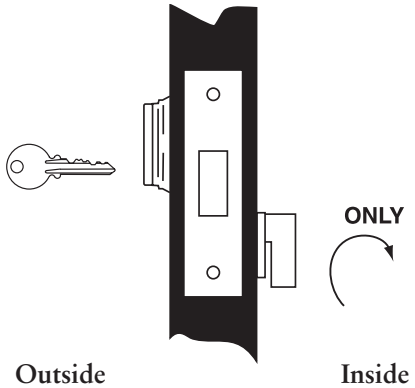

Outside Inside

313ST

Deadbolt by key outside. Inside thumbturn will retract deadbolt, but will not project it.

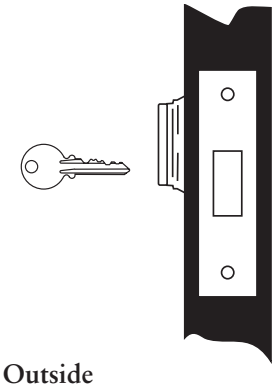

Outside Inside

314

Deadbolt by key outside only.

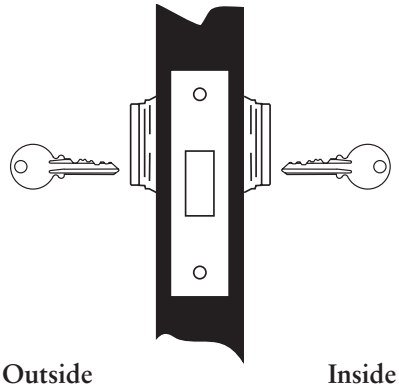

Outside Inside

314-1/4

Deadbolt by key outside and inside.

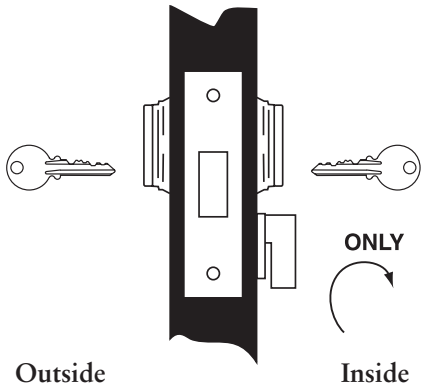

Outside Inside

314-1/4ST

Deadbolt by key outside and inside. Inside thumbturn will retract deadbolt, but will not project it.

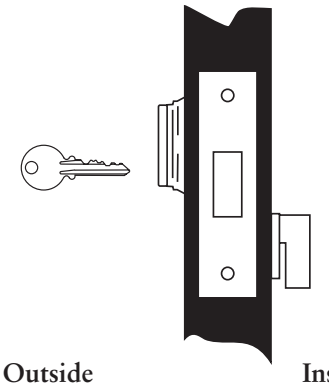

Outside Inside

315

Deadbolt by key outside, thumbturn inside.

List Nos.	ANSI Nos.
313ST	E16091
314	E16081
314-1/4	E16061
314-1/4ST	--
315	E16071

STRIKES

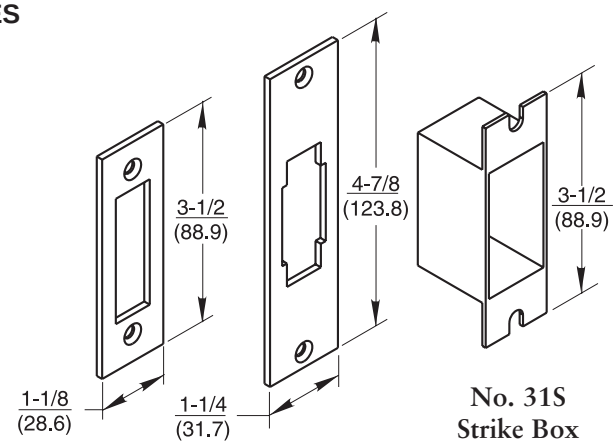

No. 30S
Standard

545
Optional

No. 31S
Strike Box

All dimensions are in inches (mm).

THUMBTURN ASSEMBLIES

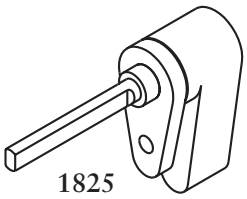

1825
(Used with 315)

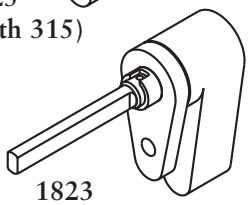

1823
(Used with 313ST and 314-1/4ST)
Optional mortise (315 only) thumbturns available.

PADLOCKS 7300

STANDARD FEATURES

Case: Solid brass lacquer-coated finish.
Shackle: Hardened steel, triple spring loaded bolts at heel and toe of shackle.
Keying: Pin tumbler, 7313, 7314 and 7315 padlocks, 5 pins standard, 6 pins where required. Keyed Different (KD) standard, available Keyed Alike (KA), Master Keyed (MK), Grand Master Keyed (GMK) or higher levels of keying.
Keys: Two keys supplied with each padlock.

OPTIONAL FEATURES

Extended Shackles: All padlock sizes have shackles with extended vertical clearances as outlined in adjacent chart.
Brass Shackles: Available in all variations of the 7300 with a clear coated finish. Suffix "B" to the Model No. (i.e. 7314B).
Chains: 8" steel chains for steel shackles and 8" brass chains for brass shackles, both with clevis around shackle only.
Chain Model Nos. 42S or 42A for 7314 and Model Nos. 23S or 23A for 7315 Suffix "1/2" to padlock Model No. (i.e. 7314-1/2 or 7315B-1/2). See page 15 for chain details. 9" chains available to special order.
Loose Rivet Padlocks: For unassembled padlocks, prefix the padlock Model No. with "NA", specify key section and number of pins (i.e. NA7314 x GA x 6-pin). Padlocks are supplied with shackle, bolts, and bolt hole disc pre-assembled. All necessary parts are provided except pins, drivers, and driver springs. Two ringed key blanks are also included with each padlock.

SPECIFICATION

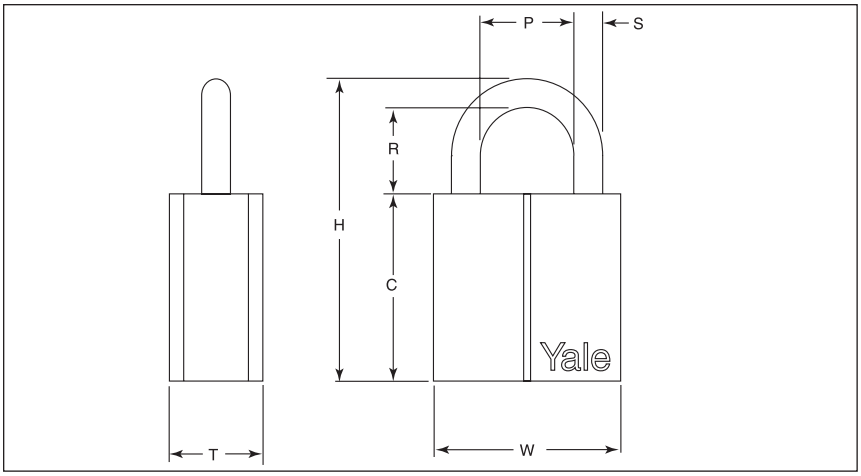

DIMENSIONS AND DETAILS

Model Number	Case			Shackle			Overall Height	Plug Diameter	Std. No. of Pins	Max. No. of Pins	Standard Key Blanks
	Width	Height	Thickness	Vertical Clearance	Diameter	Horizontal Clearance					
	W	C	T	R	S	P	H				
7313	1-5/8" (41mm)	1-5/8" (41mm)	13/16" (21mm)	3/4" (19mm)	1/4" (6mm)	13/16" (21mm)	2-5/8" (67mm)	.51 (13)	5	6	RB8E1R
7314	1-3/4" (44mm)	1-5/8" (41mm)	13/16" (21mm)	3/4" (19mm)	1/4" (6mm)	13/16" (21mm)	2-5/8" (67mm)	.51 (13)	5	6	RB8E1R
7315	2" (51mm)	1-5/8" (41mm)	13/16" (21mm)	15/16" (24mm)	3/8" (10mm)	15/16" (24mm)	2-15/16" (75mm)	.51 (13)	5	6	RB8E1R

OPTIONAL SHACKLES

Optional Vertical Clearance (R)	Model No.	Optional List # and Overall Height (H)				
		H	Model No.	H	Model No.	H
1-1/2" (38mm)	7323	3-3/8" (86mm)	7324	3-7/16" (87mm)	7325	3-1/2" (89mm)
2-1/2" (64mm)	7333	4-3/8" (111mm)	7334	4-7/16" (113)	7335	4-1/2" (114mm)
3-1/2" (89mm)	7343	5-3/8" (137mm)	7344	5-7/16" (138mm)	7345	5-1/2" (140mm)

Optional shackle padlocks have all other dimensions and details identical to the standard padlock.

Note: All dimensions are in inches and are to the nearest 1/16"(2mm). Dimensions are nominal.

PADLOCKS 800

STANDARD FEATURES

Case: Extra-heavy brass casting, clear coated finish.
Shackle: Hardened steel, triple-plated for rust resistance, chrome finish.
Shackle Locking: Two spring-loaded bolts at heel and toe of shackle.
Keying: Pin tumbler cylinder, 840 and 850 padlocks, 5-pins standard, 4- or 6-pins where required; 870 padlock, 5-pins standard, 6- or 7-pins where required. Keyed Different (KD) standard, available Keyed Alike (KA), Master Keyed (MK), Grand Master Keyed (GMK) or higher levels of keying.
Keys: Two keys supplied with each padlock.

OPTIONAL FEATURES

Extended Shackles: As outlined in adjacent chart.
Brass Shackles: Available in all listed shackle variations. Suffix "B" to the Model No. (i.e. 840B).
Chains: 8" steel chains for steel shackles and 8" brass chains for brass shackles, clevis around shackle only. Chain Model Nos. 42S or 42A for 840 and Model Nos. 23S or 23A for 850. Suffix "1/2" to padlock Model No. for clevis around shackle (i.e. 840-1/2). For clevis riveted to case, 8" steel chain and steel clevis for steel shackle and 8" brass chain and brass clevis, for brass shackles, suffix "3/4" to padlock Model No. (i.e. 850-3/4). See page 15 for chain details. 9" chains available to special order.
Unassembled Padlocks: For keying in the field. Specify the padlock number , x O-bittings x key section x number of pins (i.e. 850 x O-bittings x GA x 6-pins). Padlock is assembled, but loose rivets permit easy disassembly. Padlocks are furnished with two ringed key blanks.

SPECIFICATION

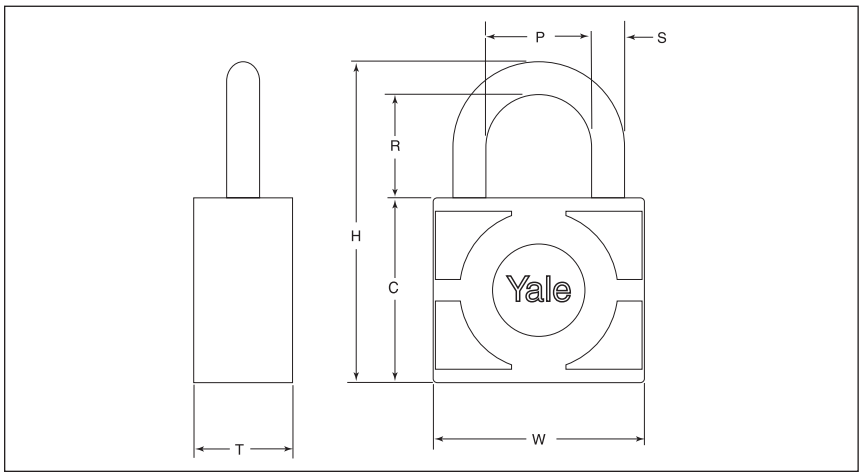

DIMENSIONS AND DETAILS

Model Number	Case			Shackle			Overall Height	Plug Diameter	Std. No. of Pins	Max. No. of Pins	Standard Key Blanks
	Width	Height	Thickness	Vertical Clearance	Diameter	Horizontal Clearance					
	W	C	T	R	S	P	H				
840	2" (51)	1-3/4" (44mm)	15/16" (24mm)	15/16" (24mm)	5/16" (8mm)	7/8" (22mm)	3" (76mm)	.51" (13mm)	5	6	RB8E1R
850	2-3/16" (56)	1-3/4" (44mm)	15/16" (24mm)	1-1/8" (29mm)	3/8" (10mm)	15/16" (24mm)	3-3/16" (81mm)	.51" (13mm)	5	6	RB8E1R
870	2-5/8" (67mm)	1-15/16" (49mm)	1" (25mm)	1-1/4" (32mm)	7/16" (11mm)	1-5/16" (49mm)	3-3/4" (95mm)	.51" (13mm)	5	7	RB8E1R

OPTIONAL SHACKLES

Optional Vertical Clearance (R)	Optional List # and Overall Height (H)			
	Model No.	H	Model No.	H
1-1/2" (38mm)	2840	3-1/2" (89mm)	2850	3-11/16" (84mm)
2-1/2" (64mm)	3840	4-1/2" (114mm)	3850	4-11/16" (119mm)
3-1/2" (89mm)	5840	5-1/2" (140mm)	5850	5-11/16" (144mm)

Optional shackle padlocks have all other dimensions and details identical to the standard padlock.

Note: All dimensions are in inches and are to the nearest 1/16"(2mm). Dimensions are nominal.

PADLOCKS 400

STANDARD FEATURES

Case: Solid brass, clear coated finish.
Shackle: Hardened steel, triple-plated for rust resistance, chrome finish.
Shackle Locking: Two hardened steel balls at heel and toe of shackle.
Keying: Available with 6- or 7-pin tumblers as specified. (To key into 5-pin systems, use the 424 padlock with the 1210 core. Set up the first five pins only. The regular FN117C 7-pin length control key must be used.) For alternative cylinders refer to Yale® KeyMark® and/or *Yale* Cylinder and Keys catalog section.
Keys: Two Change Keys supplied with each padlock, quantity of Control Keys must be specified on the order.

OPTIONAL FEATURES

Extended Shackles: As outlined in chart.
Brass Shackles: Available in all variations of 424 and 424 padlocks. Suffix "B" to the Model No. (i.e. 424B).
Chains: 8" steel chains for steel shackles and 8" brass chains for brass shackles, clevis around shackle only. Chain Model Nos. 42S or 42A. Suffix "1/2" to the Model No. (i.e. 424 1/2). See page 15 for chain details. 9" chains available to special order.
Dust Guards: Prefix the padlock Model No. with "D" (i.e. D424). Dust guard is a part of the core assembly.

SPECIFICATION

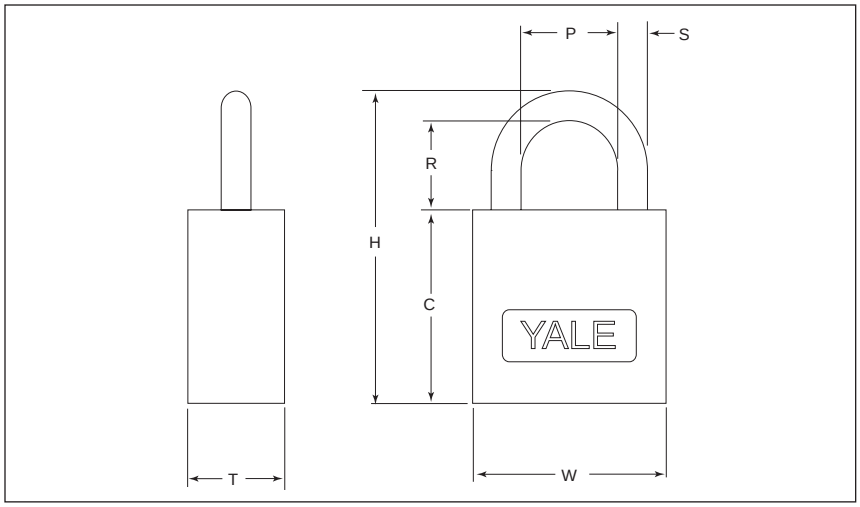

DIMENSIONS AND DETAILS

Model Number	Case			Shackle			Overall Height	Plug Diameter	No. of Pins	Standard Key Blanks	Core List No.
	Width	Height	Thickness	Vertical Clearance	Diameter	Horizontal Clearance					
	W	C	T	R	S	P	H				
424	1-3/4" (44mm)	2" (51mm)	7/8" (22mm)	7/8" (22mm)	5/16" (8mm)	13/16" (21mm)	3-3/16" (81mm)	.51" (13mm)	6	See Chart	1210
- 434	1-3/4" (44mm)	2-3/16" (56mm)	7/8" (22mm)	7/8" (22mm)	5/16" (8mm)	13/16" (21mm)	3-3/8" (86mm)	.51" (13mm)	7		1220

OPTIONAL SHACKLES

Optional Vertical Clearance (R)	Optional List # and Overall Height (H)			
	Model No.	H	Model No.	H
1-3/4" (44mm)	2424	4-1/16" (103mm)	2434	4-1/4" (108mm)
2-1/2" (64mm)	3424	4-13/16" (122mm)	3434	5" (127mm)

Optional shackle padlocks have all other dimensions and details identical to the standard padlock.

Note: All dimensions are in inches and are to the nearest 1/16"(2mm). Dimensions are nominal.

PADLOCKS 400

Removable Core Features

- Core can be removed in seconds.
- No tools needed.
- Instant recoring can be accomplished, even by untrained personnel.
- Each keying system has its own control key.
- Cores are interchangeable with many type of *Yale* locks, including mortise, cylindrical, exit devices, and mono locks.

How To Re-Core *Yale* Removable Core Padlocks

1. Insert the Control Key into the keyway.
2. Turn the Control Key 15° to the right.
3. Withdraw the core assembly from the padlock case. (The entire tumbler mechanism is contained inside the core assembly.)
4. Insert the Control Key into a new core assembly and turn the key 15° to the right.
5. Insert the new core assembly into the padlock case.
6. Turn the Control Key 15° to the left and remove it. Recoring with a new key combination is complete. Security is changed in a matter of seconds.

PADLOCKS/CHAINS

840-3/4 shown.

23A and 23S chains riveted to case.
Specify suffix “3/4”.

Model No.	Material	Minimum Length*	Shackle Diameter	Gauge Size
42A	Brass	8" (203mm)	9/32"–5/16" (7mm-8mm)	15
42S	Steel	8" (203mm)	9/32"–5/16" (7mm-8mm)	15
23A	Brass	8" (203mm)	11/32"–7/16" (9mm-11mm)	13
23S	Steel	8" (203mm)	11/32"–7/16" (9mm-11mm)	13

***9" chains available to special order.**
Chains are used with 7300, 800, and 400 Series padlocks. All chains are double-link type.

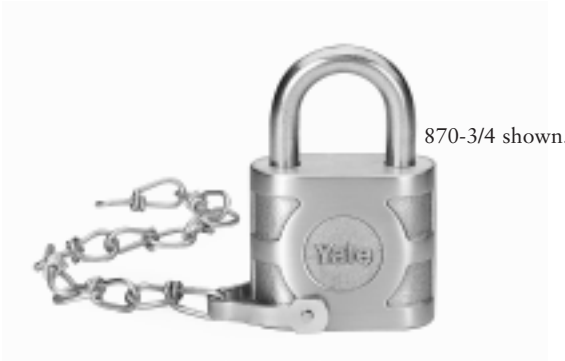

870-3/4 shown.

42A and 42S chains riveted to case.
Specify suffix “3/4”.

23A and 23S chains with clevis.
Specify suffix “1/2”.

42A and 42S chains with clevis.
Specify suffix “1/2”.

All dimensions are in inches (mm).

SECURITY LATCHLOCK 80

OPERATION

Outside: Furnished standard with 5-pin rim cylinder 1109E.
Inside: Bolt can be deadlocked or held back by slide button, rendering the lock inoperable by key or knob.

Model Numbers	
80	Boxed
V80	Visual Pack

SPECIFICATION

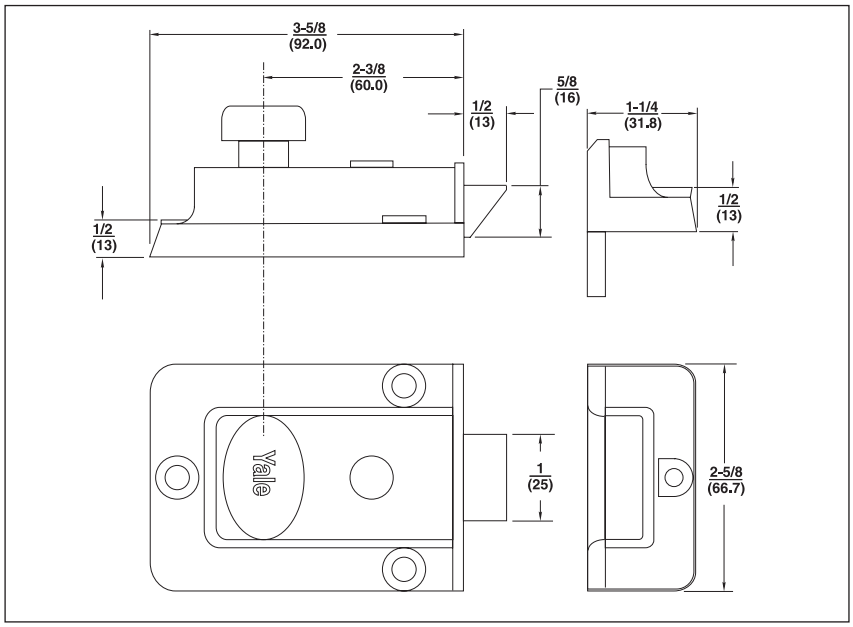

TECHNICAL INFORMATION

Description	80
Backset	2-3/8" (60)
Material	Zinc Alloy
Springbolt Length	1/2" (13)
Reversible Latchbolt	Yes, order #8RB Strike
Cylinder	Yale® Brass 5-pin with anti-pick mushroom drivers 1109E
Case Finishes	Enameled Brasslux
Cylinder Finish	Brass
2 Keys	RB8
Door Thickness	1-1/4" to 2-1/4" (32-57)

All dimensions are in inches (mm).

SECURITY LATCHLOCK 88

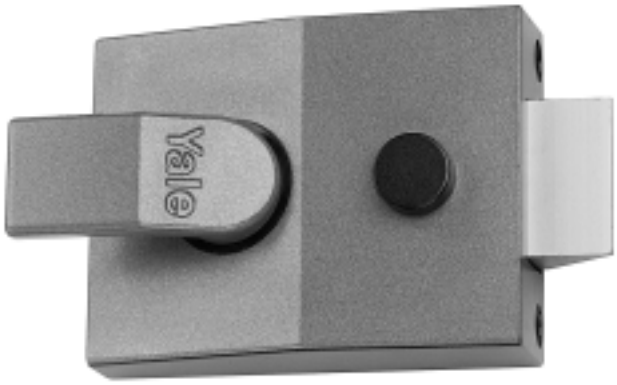

OPERATION

Outside: Furnished standard with 5-pin rim cylinder 1109E.
Inside: Bolt can be deadlocked or held back by slide button, rendering the lock inoperable by key or handle.

Model Numbers	
88	Boxed
V88	Visual Pack

SPECIFICATION

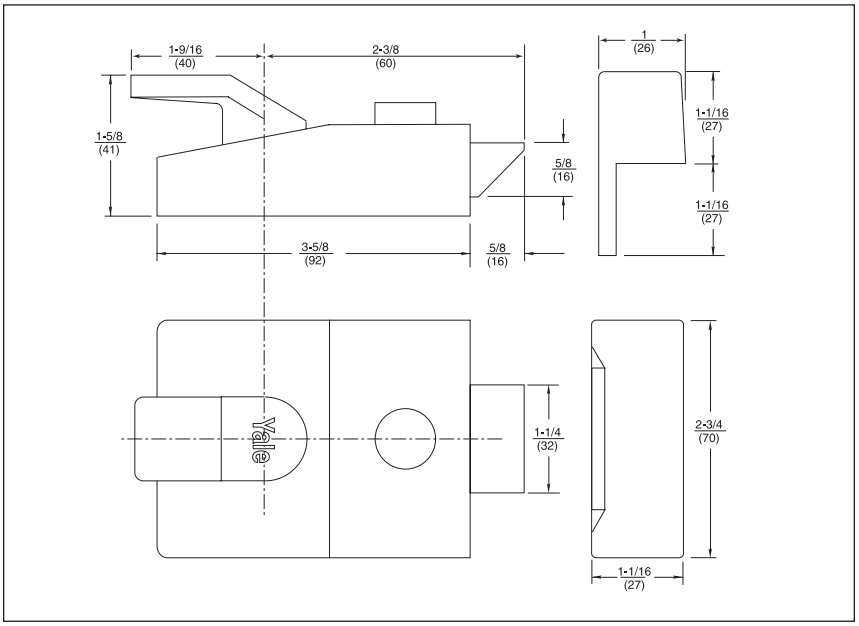

TECHNICAL INFORMATION

Description	88
Backset	2-3/8" (60)
Material	Zinc Alloy
Springbolt Length	5/8" (16)
Reversible Latchbolt	Yes, order #8RB Strike
Cylinder	Yale® Brass 5-pin with anti-pick mushroom drivers 1109E
Case Finishes	Dark Metallic Grey Only
Cylinder Finish	Brass
2 Keys	RB8
Door Thickness	1-1/4" to 2-1/4" (32-57)

All dimensions are in inches (mm).

HEAVY-DUTY LATCHBOLT 112

OPERATION

Outside: Furnished standard with 5-pin rim cylinder 1109E.
Inside: 180° turn of the thumbturn throws or retracts deadbolt. Also available with flat strike, model no. 112F (for outswinging doors).

Model Numbers	
112	Boxed
112F	Boxed

SPECIFICATION

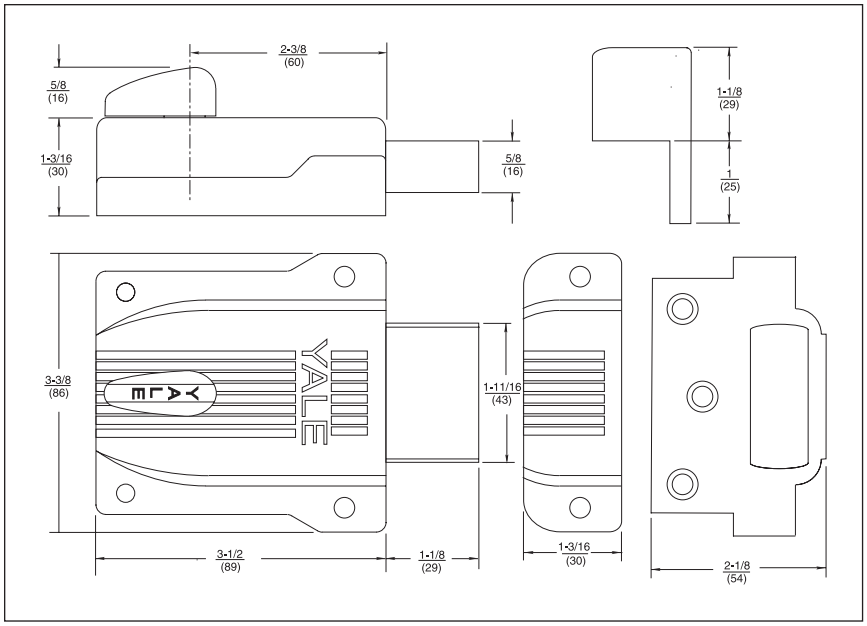

TECHNICAL INFORMATION

Description	112
Backset	2-3/8" (60)
Material	Zinc Alloy
Springbolt Length	1-1/8" (29)
Cylinder	Yale® Brass 5-pin with anti-pick mushroom drivers 1109E
Case Finishes	Sprayed Brass
Cylinder Finish	Brass
2 Keys	RB8
Door Thickness	1-1/4" to 2-1/4" (32-57)

All dimensions are in inches (mm).

HEAVY-DUTY DEADBOLT 112-1/4

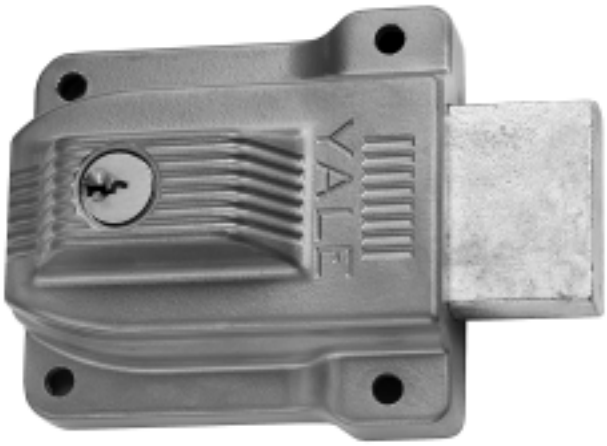

OPERATION

Outside: Furnished standard with 5-pin rim cylinder 1109E.
Inside: Turning the key throws or retracts the deadbolt. Also available with flat strike, model no. 112-1/4F (for outswinging doors).

Model Numbers	
112-1/4	Boxed
112-1/4F	Boxed

SPECIFICATION

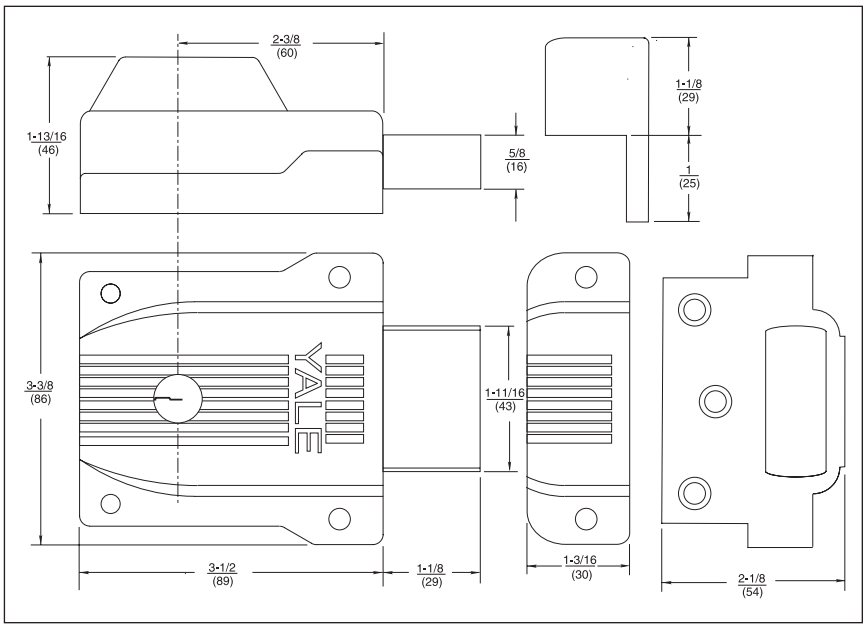

TECHNICAL INFORMATION

Description	112-1/4
Backset	2-3/8" (60)
Material	Zinc alloy
Deadbolt Length	1-1/8" (29)
Cylinder (Outside)	Yale® Brass 5-pin with anti-pick mushroom drivers 1109E
Cylinder (Inside)	Fixed 3-pin Brass cylinder. No alternatives.
Case Finishes	Sprayed Brass
Cylinder Finish	Brass
2 Keys	RB8
Door Thickness	1-1/4" to 2-1/4" (32-57)

All dimensions are in inches (mm).

JIMMY-PROOF DEADLOCK 197

OPERATION

Outside: Furnished standard with 5-pin rim cylinder 1109E.
Inside: 90° turn of the thumbturn locks or unlocks deadbolt. Also available with flat strike, model no. 197F (for outswinging doors).

Model Numbers	
197	Boxed
V197	Visual Pack
197F	Flat Strike, Boxed

SPECIFICATION

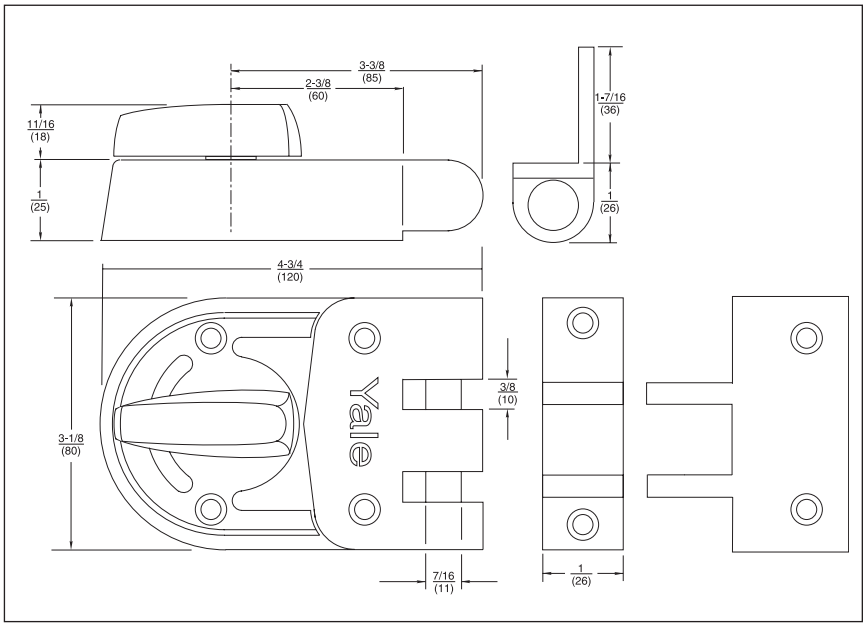

TECHNICAL INFORMATION

Description	197
Backset	2-3/8" (60)
Material	Zinc Alloy
Deadbolt Length	N/A
Reversible Latchbolt	N/A
Cylinder	Yale® Brass 5-pin with anti-pick mushroom drivers 1109E
Case Finishes	Sprayed Brass
Cylinder Finish	Brass
2 Keys	RB8
Door Thickness	1-1/4" to 2-1/4" (32-57)

All dimensions are in inches (mm).

JIMMY-PROOF DEADLOCK 197-1/4

OPERATION

Outside: Furnished standard with 5-pin rim cylinder 1109E.
Inside: Key locks or unlocks deadbolt. Also available with flat strike, model no. 197-1/4F (for outswinging doors).

Model Numbers	
197-1/4	Boxed
V197-1/4	Visual Pack
197-1/4F	Flat Strike, Boxed

SPECIFICATION

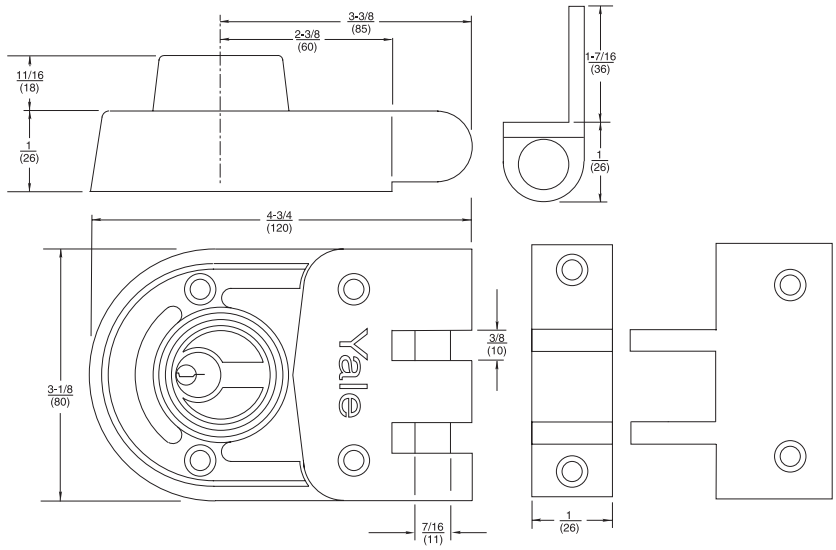

TECHNICAL INFORMATION

Description	197-1/4
Backset	2-3/8" (60)
Material	Zinc Alloy
Deadbolt Length	N/A
Reversible Latchbolt	N/A
Cylinder (Outside)	Yale® Brass 5-pin with anti-pick mushroom drivers 1109E
Cylinder (Inside)	Fixed 3-pin Brass cylinder. No alternatives.
Case Finishes	Sprayed Bronze
Cylinder Finish	Brass
2 Keys	RB8
Door Thickness	1-1/4" to 2-1/4" (32-57)

All dimensions are in inches (mm).

AUXILIARY RIM LOCK COMPONENTS

RIM LOCKS

Yale® Auxiliary Rim Locks are packaged, warehoused, and shipped with an 1109E brass, 5-pin, E1R (PARA) section rim cylinder. They are only available Keyed Different.

STANDARD CYLINDER

Model No. 1109E Cylinder is supplied standard with all *Yale* Auxiliary Rim Locks. It is not available as a replacement cylinder.

Note: 1109E depths and spacings are not compatible with other cylinders available from Yale Commercial Locks and Hardware.

ALTERNATIVE RIM CYLINDER

Refer to Yale® KeyMark® and/or *Yale* Cylinder and Keys Catalog section.

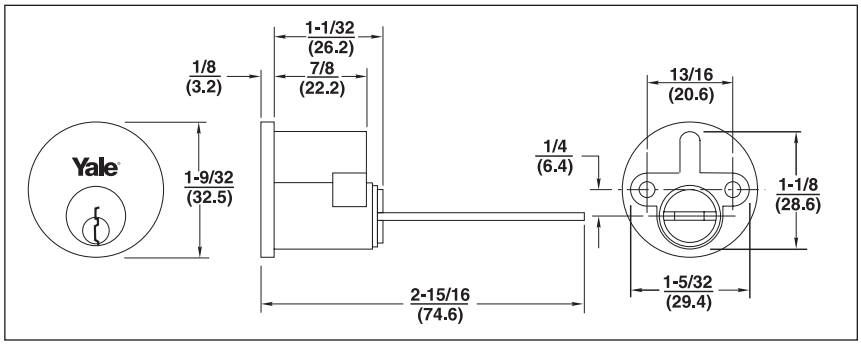

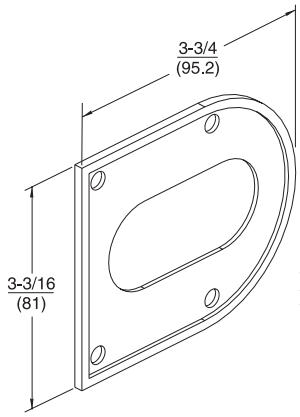

No. 97 Spacer Plate
Used with 197F and 197-1/4F to shim lock body for uneven door and frame alignment

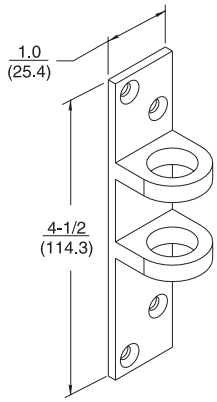

No. 197F Flat Strike
Used with 197F and 197-1/4F for outswing doors.

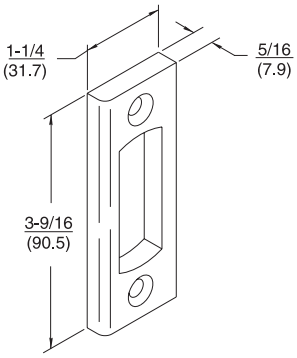

No. 112F Flat Strike
Used with 112F and 112-1/4F for outswing doors.

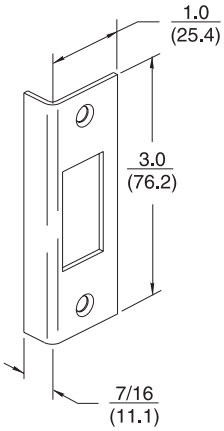

No. 8 Rim Strike
Used with 80 and 88 for outswing doors.

All dimensions are in inches (mm).

CABINET LOCK 511/511S

511

Application: Pin tumbler lock for 3/4" (19mm), 1" (25mm), 1-1/8" (29mm) or 1-3/8" (35mm) wood or metal wardrobe doors.
Operation: Key extends and retracts bolt.
Material: All brass.

Finishes: Nose and scalp 605 standard; 625 and 626 to order.
Keying: 4-, 5-, or 6-pin tumblers, two keys. Can be Master Keyed and Grand Master Keyed.
Non-Handed: Suits RH or LH applications.

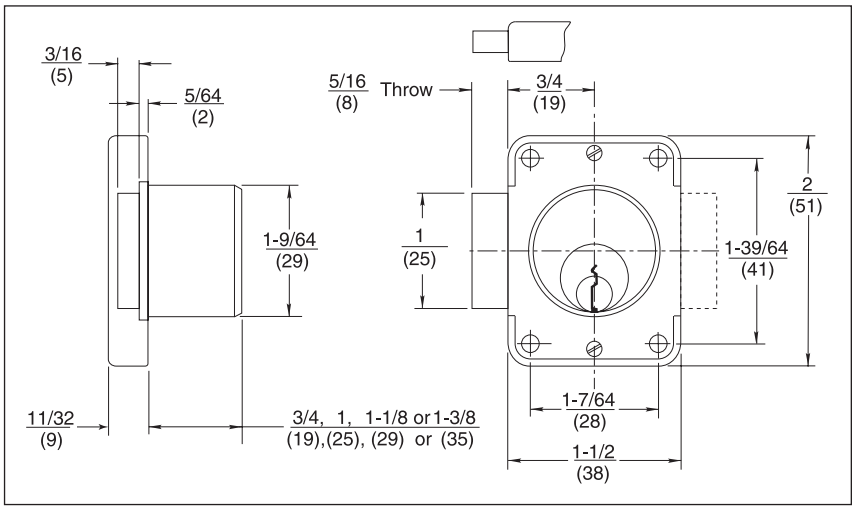

511S

Application: Pin tumbler lock for 3/4"(19mm), 1" (25mm), 1-1/8" (29mm) or 1-3/8" (35mm) wood or metal wardrobe doors.
Operation: Key retracts latchbolt.
Material: All brass.

Finishes: Nose and scalp 605 standard; 625 and 626 to order.
Keying: 4-, 5-, or 6-pin tumblers, two keys. Can be Master Keyed and Grand Master Keyed.
Handed: Specify RH or LH. Right hand shown.

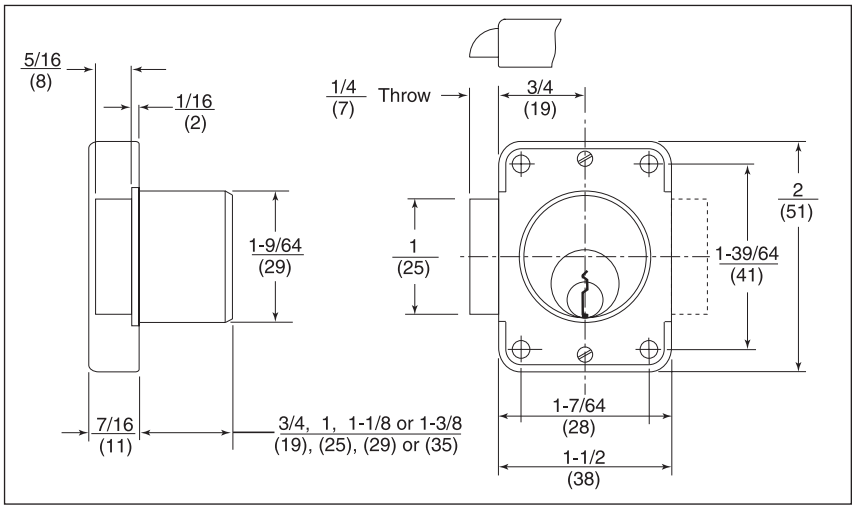

All dimensions are in inches (mm).

CABINET LOCKS C970

C970

Operation: Key rotates plug 360°. Key removable in vertical position only. Cam stop pin packed with each cylinder for restricted cam rotation when desired.

Material: Brass cylinder and cam.
Keys: 5- or 6-pin.

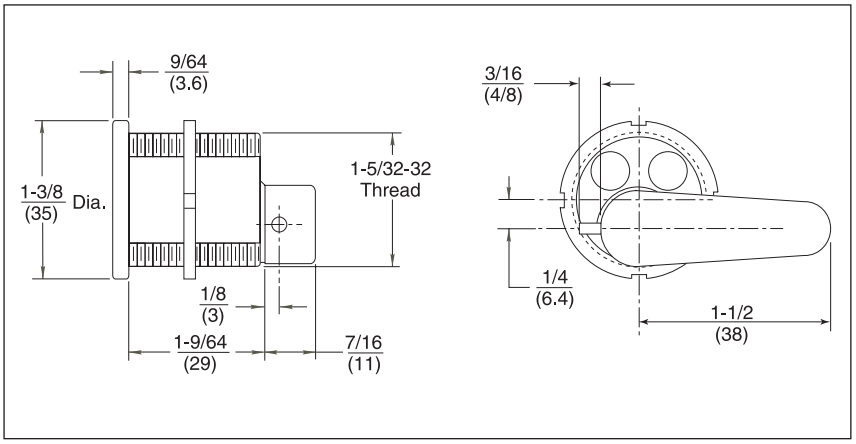

ACCESSORIES

511S ANGLE STRIKE

May be specified with surface type Spring Bolt Lock 511S.

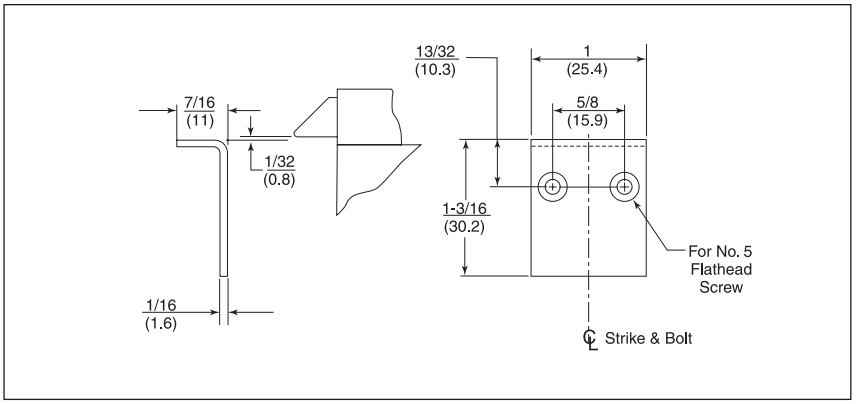

All dimensions are in inches (mm).

SPECIAL PURPOSE LOCKS C501/C1810

C501 LETTER BOX LOCK

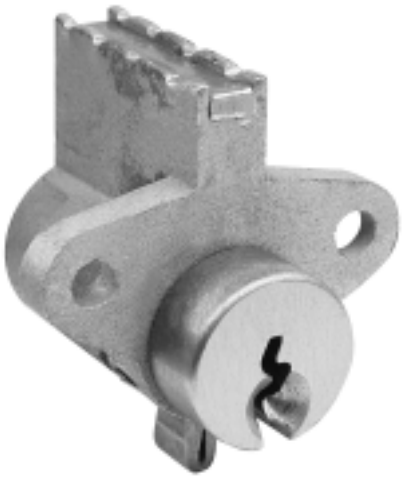

Application: For apartment house and dormitory letter boxes. Cylinder must be shipped to the manufacturer for installation.
Operation: Key rotates plug 30°.
Material: Solid brass.
Finishes: 605, 606, 612, 625 and 626.
Keying: Standard 5-pin tumbler; first pin not used. Can be keyed into 5-, 6-, or 7-pin systems.

When keying into 7-pin system, 1/4" (6mm) clearance beyond back of cylinder is required.
Available: KD standard. KA or MK (for special purposes) by order. Cannot be Construction Master Keyed. Two keys.
ATTACHING SCREWS ARE NOT FURNISHED. Standard screw is 6-32 x 1/4 FHMS.
Cam: Part No. 30-0501-2001-999
Screws: Part No. 81-0021-1102-999

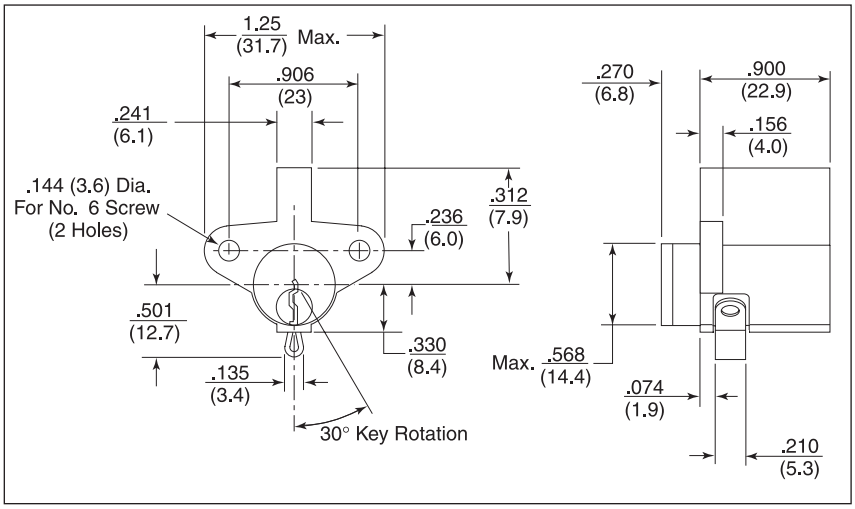

C1810 LETTER BOX LOCK

Finishes: 606 and 626.
Keying: Standard 5- or 6-pin, all cylinders drilled for 6-pin. Can be keyed into 7-pin system, first six pins active, or with special long cylinder with 7 active pins.

Available: KD standard. KA or MK (for special purposes) by order. Cannot be Construction Master Keyed. Two keys.
Cam: Part No. 30-0501-2001-999
Screws: Part No. 81-0021-1102-999

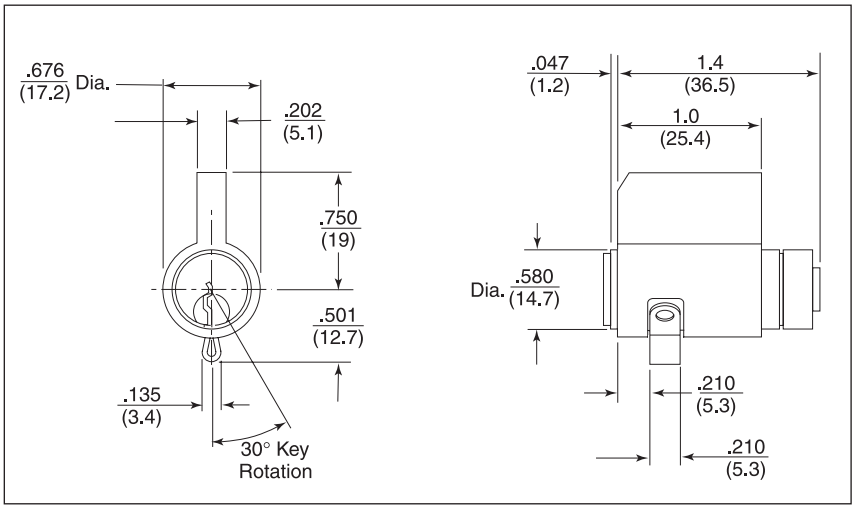

All dimensions are in inches (mm).

SPECIAL PURPOSE LOCKS C900

C900 SERIES CYLINDERS FOR ELECTRIC SWITCHES

Operation: Key rotates plug 360°. Key removable in one, two, or three positions.
Material: Brass and bronze. Brass attaching nuts.

Finishes: 606, 622 and 626.
Keying: 5-pin tumblers; two No. 11 keys.
Cylinder Nut:
Part No. 60-7000-2421-000

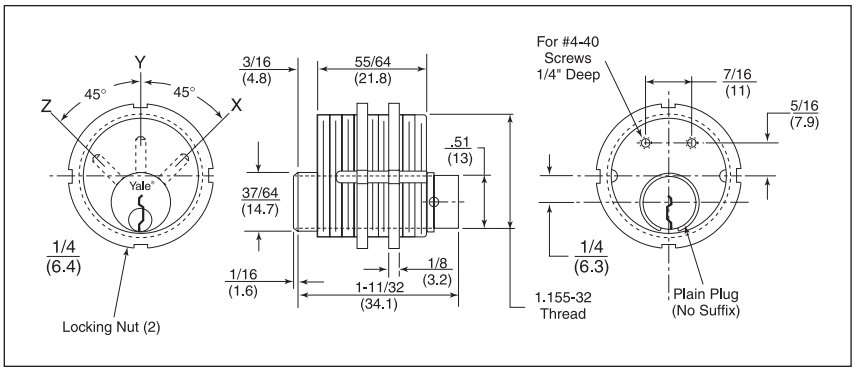

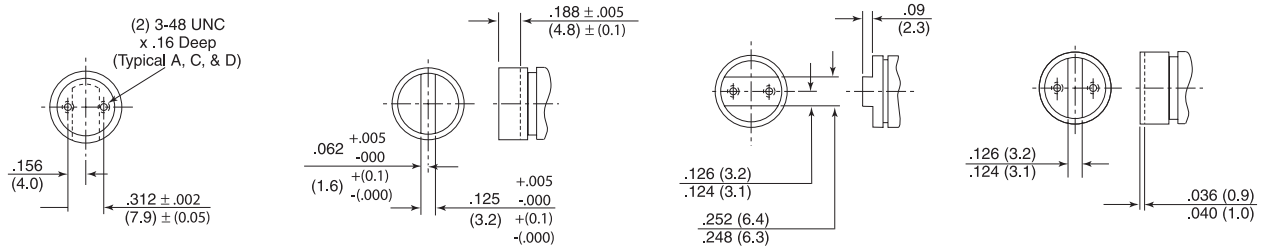

"A" "B" "C" "D"

ONE-POSITION KEY REMOVABLE

Model No.	Key Rem. Pos.	Plug Config.	Old Model No.
C910	Y	Plain	C950
C910A	Y	A	C950A
C910B	Y	B	C950B
C910C	Y	C	C954A
C910D	Y	D	C950A
C911	Z	Plain	C951
C911A	Z	A	C951B
C911B	Z	B	C951D
C911C	Z	C	--
C911D	Z	D	--

TWO-POSITION KEY REMOVABLE

Model No.	Key Rem. Pos.	Plug Config.	Old Model No.
C920	X-Y	Plain	C960
C920A	X-Y	A	C960A
C920B	X-Y	B	C960B
C920C	X-Y	C	C952A
C920D	X-Y	D	--
C921		Y-Z	Plain
C921A	Y-Z	A	C951A
C921B	Y-Z	B	C951C
C921C	Y-Z	C	C953A
C921D	Y-Z	D	--
C922	Y-Z	Plain	C972
C922A	X-Z	A	--
C922B	X-Z	B	--
C922C	X-Z	C	--
C922D	X-Z	D	--

All dimensions are in inches (mm).

THREE-POSITION KEY REMOVABLE

Model No.	Key Rem. Pos.	Plug Config.	Old Model No.
C930	X-Y-Z	Plain	C971
C930A	X-Y-Z	A	C971A
C930B	X-Y-Z	B	C971B
C930C	X-Y-Z	C	--
C930D	X-Y-Z	D	--

When Ordering:
Specify keyway and bitting No. (C910 and C911 models can be master keyed). Specify finish. (Standard finishes 606, 622, and 626.)
If mounting nuts are not required, specify "w/o nuts."
Prefix list No. with "SP" for steel disc in plug face (i.e. SPC910A).

HOW TO ORDER

The following is a hypothetical item listed in proper sequence for complete and simplified ordering. The item you order may or may not require use of all indicated segments. Please refer to the alphabetical listing below to include all necessary information that will allow us to properly fill your order.

Qty.	A	B	C	D	E	F	G	H
100	315	MK	Lock	612	RH	30S	1196	1-3/4

See Supplementary Specifications Below	
Box	**Translation**
A	Model Number
B	Highest Keying Level
C	Description
D	Finish
E	Hand
F	Strike
G	Cylinder
H	Door Thickness
I	Supplementary Specifications - Specific keying, 7-pin cylinder, spacer plate, special cylinder rings, etc. (Specify by model number where available; see index for page references.)

online literature and templates

For the latest information on Yale Commercial Lock and Hardware products, visit our website at www.yalelocks.com.

Click on the "Literature" button to find:

- Catalogs
- Parts manuals
- Templates
- Specifications
- Installation instructions

Yale® customers can click on the ebusiness symbol on the website to register for an ebusiness account to:

- Check the status of orders
- Review accounts receivable statements
- Check inventory of warehouse stock items

www.yalelocks.com

Yale Commercial Locks and Hardware

Address: 1902 Airport Road, Monroe, NC 28110 USA

Tel: 1-800-438-1951 • *Fax:* 1-800-338-0965 • www.yalelocks.com

Yale-Corbin Canada Ltd.

Address: 6940 Edwards Boulevard, Mississauga, Ontario, Canada L5T 2W2

Tel: 1-800-461-3007 • *Fax:* 1-800-461-8989 • www.yalecorbin.on.ca

Yale® is a registered trademark of Yale Security Inc. KeyMark® is a registered trademark of Medeco Security Locks, Inc. Other product brand names may be trademarks or registered trademarks of their respective owners and are mentioned for reference purposes only. Copyright© 2002 Yale Security Inc. All rights reserved. These materials are protected under US copyright laws. All contents current at time of publication. Yale Security Inc. reserves the right to change availability of any item in this bulletin, its design, construction, and/or its materials.

The ASSA ABLOY Group is the world's leading manufacturer and supplier of locking solutions, dedicated to satisfying end-user needs for security, safety and convenience.

An ASSA ABLOY Group company

ASSA ABLOY

42117-MA-15.0-11/02R