Yale®

MORTISE LOCKS

8700 SERIES

CATALOG

An ASSA ABLOY Group company

ASSA ABLOY

AN INDUSTRY STANDARD

INTRODUCTION

The Yale® 8700 Series mortise lock provides steadfast dependability and is the choice of architects and end-users that require superior performance in even the toughest commercial applications. As a longtime industry standard of quality, the *Yale* steel case mortise lock continues to provide the highest level of mechanical and electrified key operated security available.

Yale's premium mortise lock meets ANSI operational and security Grade 1 specifications and is UL listed. Functions are available for all commercial and institutional applications, with a wide variety of trim designs and finishes suitable for enhancing any architectural décor.

For applications calling for a greater degree of visual appeal, such as upscale retail establishments or high-scale condominiums, Yale's Designer Trim series brings you an aesthetically pleasing line of modern and classic lever trims with a choice of two escutcheons or roses. Please see the separate *Yale* Designer Trim catalog for details.

CONTENTS

Introduction 2
Finishes 7
Lockset Features 3
Facts and Figures 4
SL8700 5
Lever Trim Installation 6
Lever Trim 7-9
Lever Trim Conversion 10
Knob Trim 11-13
Lockset Functions 14-18
Cylinders 19
Strikes 20-21
Miscellaneous Trim Design 21
Electrified Mortise Locksets 22
Electrified Accessories 23
How To Order 24

8700

The *Yale* 8700 Series Mortise Lock is an industry standard product. Suitable for installation on doors 1-3/4" to 3-1/4" thick, these products have a 1" throw stainless steel deadbolt with two enclosed hardened steel roller armor pins. The latchbolt is 3/4" throw with stainless steel two piece anti-friction camming action.

SL8700

The SL8700 features extra heavy-duty lever escutcheon trim and is designed for institutional use including minimum security prisons. The internal components of the lock body have been modified to resist forced entry. The locking stop plunger extends through the lock body and an additional locking cam engages to ensure locking in two places.

LOCK REVERSIBILITY

Yale mortise locks with the same trim on both sides (knob x knob or lever x lever) are field reversible. These locks can be converted to accommodate the hand of the door. However, to reduce installation costs, it is recommended that the hand of the door be specified for each lockset ordered. If the hand of the door is not specified, RH will be furnished. *Yale* mortise locksets with split trim (lever outside x knob inside or knob outside x lever inside) are handed. The hand of the door must be specified on the order.

FINISHES

The *Yale* 8700 Series Mortise Lock is available in the following trim finishes. All knobs, lever handles, roses, escutcheons, cylinder rings and other exposed parts are fabricated of either brass, bronze, or stainless steel and will be compatible with the finish ordered. When ordering, specify the finish required by the ANSI Code Number only. When locksets are ordered with different trim finishes on each side, specify the outside finish first, i.e. COR8717-2 x 612 x 625. The front and strike finish will match the inside finish unless specified otherwise.

ANSI Code	Finish
605	Bright brass, clear coated
606	Satin brass, clear coated
611	Bright bronze, clear coated
612	Satin bronze, clear coated
613	Satin bronze, oxidized and oil rubbed
625	Bright chrome plate
626	Satin chrome plate
629	Bright stainless steel
630	Satin stainless steel

LOCKSET FEATURES

WARRANTY

Yale 8700 mechanical and electrical mortise locks carry a 1-year warranty.

ELECTRIFIED MORTISE LOCKS

Yale 8700 Series Mortise Locks offer Fail Safe and Fail Secure options.
Fail Safe: Locking knobs or levers are rigid only when energized.
Fail Secure: Locking knobs or levers are rigid only when de-energized.

AMERICAN NATIONAL STANDARD INSTITUTE (ANSI)

ANSI A115 Specifications for Door and Frame Preparation
8700 Series Mortise Locks conform to ANSI Specifications A115.1 and ANSI A115.11, which cover hollow metal door and frame preparation for mortise locks.

ANSI 156.13 Standards for Mortise Locks and Latches
Yale® 8700 Series Mortise Locks conform to ANSI Series 1000 mortise lock functions (F01, F04, etc.). Operational and Security Grade 1.

FEDERAL SPECIFICATIONS

Yale 8700 Series Mortise Locks conform to Federal Specifications FF-H-106C/GEN and FF-H-106/2.

KNURLED KNOB DESIGNS

Where required by the local authority, knob trim can be knurled to be identifiable to the touch for blind persons. All knob designs except CA may be ordered knurled; all lever designs except CR bronze 611, 612, 613, and PN may be ordered knurled.

Only the outside knob or lever will be knurled or abrasive coated unless specified otherwise. To order a complete lockset knurled or abrasive coated, suffix the Lockset List Number with "Knurled" or "Abrasive Coated," i.e. LF8707 x "Knurled," LF8717-2 x "Knurled Inside Only," FNE 8728FL x "Knurled Inside Only."

LEAD SHIELDING

All *Yale* 8700 Series Mortise Locks are available with a lead shield for installation on lead-lined doors.

BEVEL FRONT

Yale 8700 Series fronts are adjustable from flat to the standard bevel of 1/8" in 2". Naturally the lock front must be flush with the edge of the door.

DOOR THICKNESS

8700 Series Mortise Locks are to be supplied as standard for 1-3/4" thick doors. For other than standard, specify the door thickness on the order:
(i.e. 1-3/8"*, 2", 2-1/4", etc.)

**1-1/16" front standard when 1-3/8" door thickness is specified.*

UNDERWRITERS LABORATORIES (U.L.)

Yale 8700 Series Mortise Locks have been listed by Underwriters Laboratories Inc. for use on fire doors having a rating up to and including 3 hours. This pertains to single swing doors not exceeding 4 feet in width and 8 feet in height and in doors mounted in pairs not exceeding 8 feet in either direction (unless otherwise noted in the individual listings.)

In general, single-point mortise locks or latches with 3/4" minimum latch throw are intended for the active leaf of doors mounted in pairs, with the inactive leaf provided with top and bottom flush or surface bolts of the manual, automatic, or self-latching type. The door Classification Marking specifies the minimum latch throw required for the individual door.

Yale 8700 Series Mortise Locks with 3/4" throw latchbolts may also be used on single swing doors rated 1-1/2 hours or less, up to 4 feet in width and 9 feet in height. This is in addition to the rating mentioned above. All *Yale* 8700 Series Mortise Locks with Lever Handle Trim are UL listed for fire door applications. Underwriters Laboratories does not list locks with rabbeted fronts, locks with deadbolt only, or locks with hold-back feature on the latchbolt.

ISO 9001

Designed and manufactured in a certified ISO 9001 facility.

SL8700

Specifications for all levers below:

SL Escutcheon:	8" x 2-1/2"
Cylinder Ring:	Standard, No. 1765
Material:	Stainless steel escutcheon; Brass lever (plated to match stainless steel)

AUGUSTA - AUSL

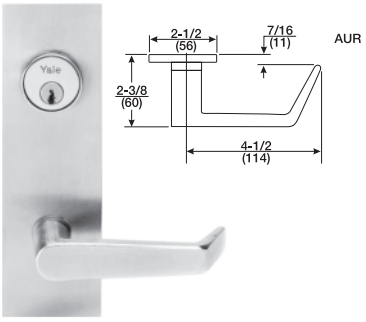

JEFFERSON - JNSL

PACIFIC BEACH - PBSL

MONROE - MOSL

CARMEL - CRSL

ARCADIA - ARSL

- The SL8700 Series Mortise Lock features heavy-duty lever escutcheon trim and is designed primarily for applications in schools and other institutions where excessive abuse and vandalism may occur. It is also recommended for use in minimum security prisons and office buildings or apartment buildings located in "high crime" areas.
- Yale® SL8700 Series lever escutcheon trims feature through-bolted installation with security head screws.
- Internal components in the lock body have been modified to resist forced entry. The locking stop plunger extends through the lock body and an additional locking cam engages to insure locking in two places. An additional built-in stop prevents over torquing the lever. (See details in drawing below.)
- Outside trim is held in place by threaded posts. Posts fit through holes in the door, above and below the lock case, and are secured by through-bolts from the inside trim.
- Heat-treated spindle resists breaking up to 1,200 inch pounds of force.
- Levers are attached to the escutcheon for added security.
- *Yale* outside escutcheon trims have no visible screws – a great deterrent to vandalism.
- At 2-1/2" wide and 3/16" thick, escutcheon is wider and more than twice as thick as standard escutcheons.
- Each mortise lock ordered with lever trim features an internal heavy-duty spring cartridge which prevents lever sag.
- All *Yale* mortise lock trims are UL listed for fire door applications.
- SL8700's are offered with Augusta, Jefferson, Pacific Beach, Monroe, Carmel and Arcadia lever handle escutcheon trims.
- SL8700 Series Mortise Locks are available in all lock functions. (See pages 13-17.)

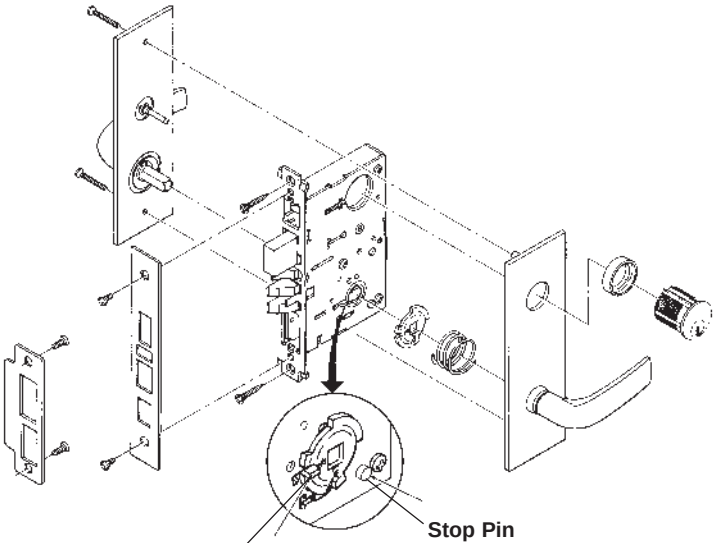

Extended Stop Plunger
Engages locking cam as well as lever hub when locked.

Stop Pin
Limits rotation of outside lever to prevent internal damage by over torquing.

FACTS AND FIGURES

8700/SL8700 SERIES

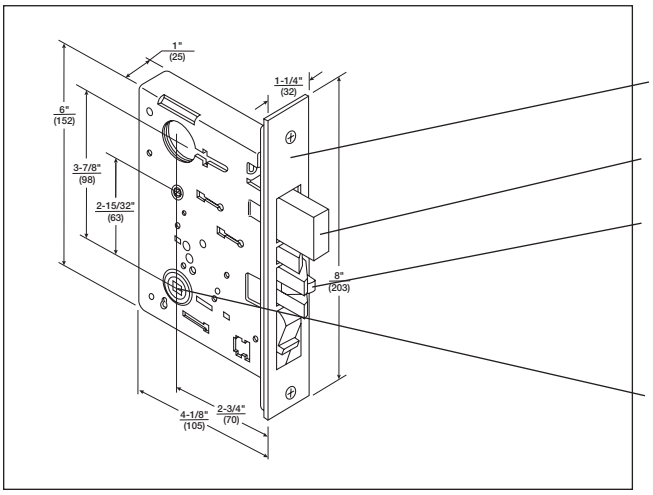

ANSI Conformance - ANSI A 156.13, Series 1000, Operational Grade 1. (SL8700 meets Security Grade 1.)

Armor Front - 8" x 1-1/4"

Door Thickness - 1-3/4" standard, to 3-1/4" thick doors to order.

Deadbolt - 1" throw, stainless steel with two enclosed hardened-steel roller armor pins.

Latchbolt - 3/4" throw, stainless steel two-piece anti-friction camming action.

UL Listed - for application on labeled fire doors.

Backset - 2-3/4" only.

Case - wrought steel, zinc dichromated.

Hubs - sintered steel, copper infiltrated for additional strength.
Knobs: 5/16" standard, 3/8" to order.
Levers: 3/8" standard.
(SL8700 - available in levers only.)

SECTIONAL LEVER INSTALLATION

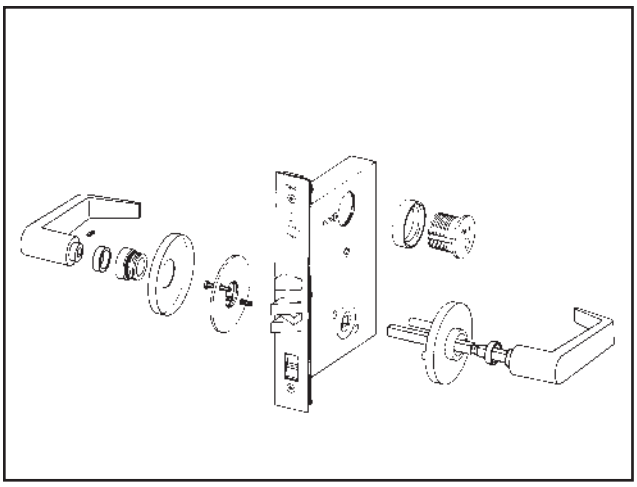

- All Yale® 8700 Series sectional lever trims feature through-bolted installation. This ensures positive alignment of the trim with the lock case and offers an attractive appearance.
- Outside trim is held in place by threaded posts. The posts fit through holes in the lock case and are secured by through-bolts from the inside trim.
- It is possible to install split trim, i.e. knob outside and lever inside, or vice versa.
- Since self-aligning trim is easy to install, on-the-job labor costs may be reduced.
- Each mortise lock ordered with lever trim features an internal heavy-duty spring cartridge which prevents lever sag.
- All *Yale* mortise lock trims are UL listed for fire door applications.
- A variety of sectional lever designs are available as shown on pages 6-8.

ESCUTCHEON LEVER INSTALLATION

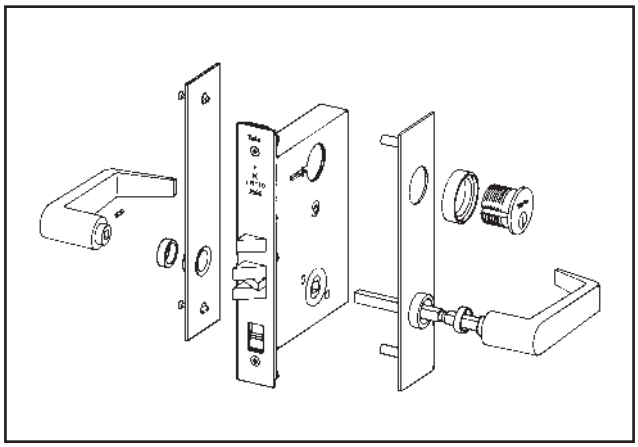

- All *Yale* 8700 Series escutcheon lever trims feature through-bolted installation.
- Outside trim is held in place by threaded posts. The posts fit through the door and are secured by through-bolts from the inside trim.
- *Yale* outside escutcheon trims have no visible screws – a great deterrent to vandalism.
- It is possible to install split trim, i.e. knob outside and lever inside, or vice versa.
- Each mortise lock ordered with lever trim features an internal heavy-duty spring cartridge which prevents lever sag.
- All *Yale* mortise lock trims are UL listed for fire door applications.
- A variety of escutcheon lever designs are available as shown on pages 6-8.

LEVER TRIM

ARCADIA - ARR

AR Lever Handle: Solid Cast
***CO Rose:** Cold forged, reinforced
Cylinder Ring: Standard, No. 1765
Material: Brass, Bronze, Stainless Steel

*Optional rose: see page 8 for description and material.

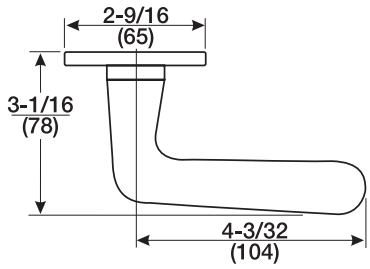

AUGUSTA - AUR

AU Lever Handle: Solid Cast
***CO Rose:** Cold forged, reinforced
Cylinder Ring: Standard, No. 1765
Material: Brass, Bronze, Stainless Steel

*Optional rose: see page 8 for description and material.

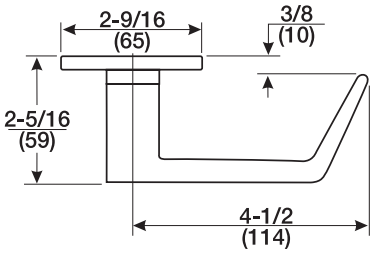

CARMEL - CRR

CR Lever Handle: Brass (solid cast), Bronze (wrought). Stainless Steel (solid cast).
***CO Rose:** Cold forged, reinforced
Cylinder Ring: Standard, No. 1765
Material: Brass, Bronze, Stainless Steel

*Optional rose see page 8 for description and material.

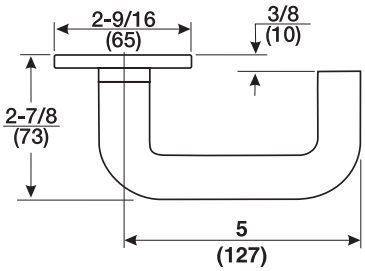

ARCADIA - ARE

AR Lever Handle: Solid Cast
***CO Escutcheon:** Heavy cold forged
Cylinder Ring: Standard, No. 1765
Material: Brass, Bronze, Stainless Steel

*Optional escutcheon: LN. See page 8 for description and material.

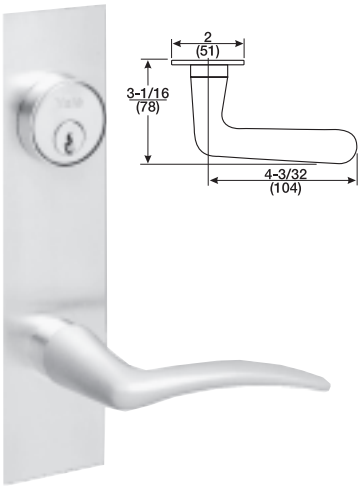

AUGUSTA - AUE

AU Lever Handle: Solid Cast
***CO Escutcheon:** Heavy cold forged
Cylinder Ring: Standard, No. 1765
Material: Brass, Bronze, Stainless Steel

*Optional escutcheon: LN. See page 8 for description and material.

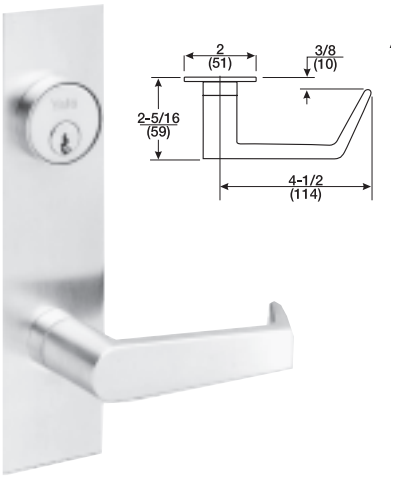

CARMEL - CRE

CR Lever Handle: Brass (solid cast), Bronze (wrought), Stainless Steel (solid cast).
***CO Escutcheon:** Heavy cold forged
Cylinder Ring: Standard, No. 1765
Material: Brass, Bronze, Stainless Steel

*Optional escutcheon: LN. See page 8 for description and material.

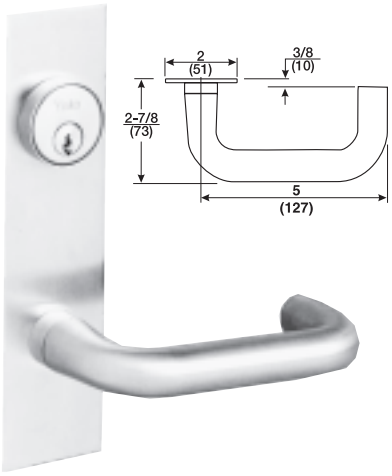

LEVER TRIM

JEFFERSON - JNR

JN Lever Handle:	Solid Cast
***CO Rose:**	Cold forged, reinforced
Cylinder Ring:	Standard, No. 1765
Material:	Brass, Bronze, Stainless Steel

*Optional rose: see page 8 for description and material.

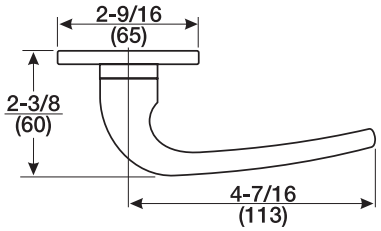

MONROE - MOR

MO Lever Handle:	Solid Cast
***CO Rose:**	Cold forged, reinforced
Cylinder Ring:	Standard, No. 1765
Material:	Brass, Bronze, Stainless Steel

*Optional rose: see page 8 for description and material.

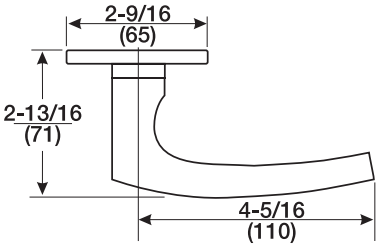

PACIFIC BEACH - PBR

PB Lever Handle:	Solid Cast
***CO Rose:**	Cold forged, reinforced
Cylinder Ring:	Standard, No. 1765
Material:	Brass, Bronze, Stainless Steel

*Optional rose: see page 8 for description and material.

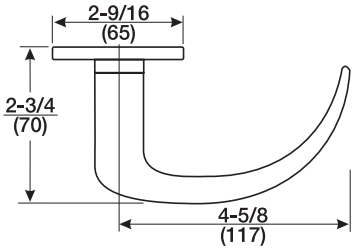

JEFFERSON - JNE

JN Lever Handle:	Solid Cast
***CO Escutcheon:**	Heavy cold forged
Cylinder Ring:	Standard, No. 1765
Material:	Brass, Bronze, Stainless Steel

*Optional escutcheon: LN. See page 8 for description and material.

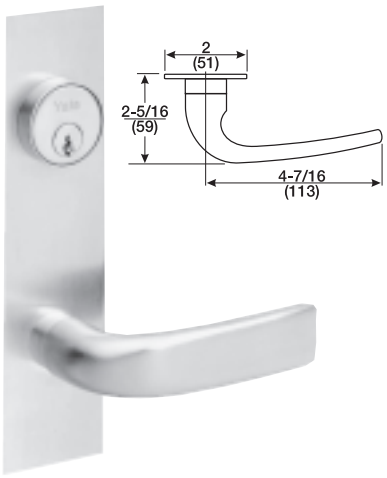

MONROE - MOE

MO Lever Handle:	Solid Cast
***CO Escutcheon:**	Heavy cold forged
Cylinder Ring:	Standard, No. 1765
Material:	Brass, Bronze, Stainless Steel

*Optional escutcheon: LN. See page 8 for description and material.

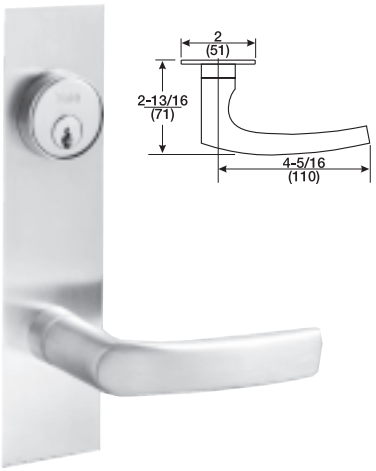

PACIFIC BEACH - PBE

PB Lever Handle:	Solid Cast
***CO Escutcheon:**	Heavy cold forged
Cylinder Ring:	Standard, No. 1765
Material:	Brass, Bronze, Stainless Steel

*Optional escutcheon: LN. See page 8 for description and material.

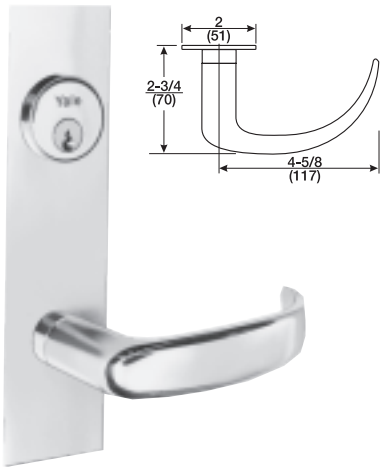

LEVER TRIM

PINEHURST - PNR

PN Lever Handle: Wrought
***CO Rose:** Cold forged, reinforced
Cylinder Ring: Standard, No. 1765
Material: Brass, Bronze, Stainless Steel

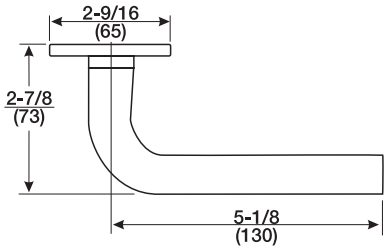

VIRGINIA - VIR

VI Lever Handle: Solid Cast
***CO Rose:** Cold forged, reinforced
Cylinder Ring: Standard, No. 1765
Material: Brass, Bronze, Stainless Steel

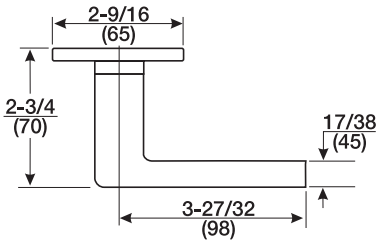

MAYFAIR - MF ROSE OPT.

Cold forged, reinforced
Material: Brass, Bronze, Stainless Steel

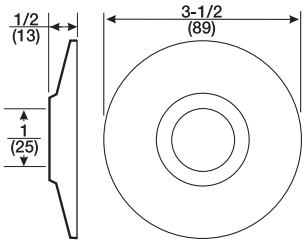

PINEHURST - PNE

PN Lever Handle: Wrought
***CO Escutcheon:** Heavy cold forged
Cylinder Ring: Standard, No. 1765
Material: Brass, Bronze, Stainless Steel

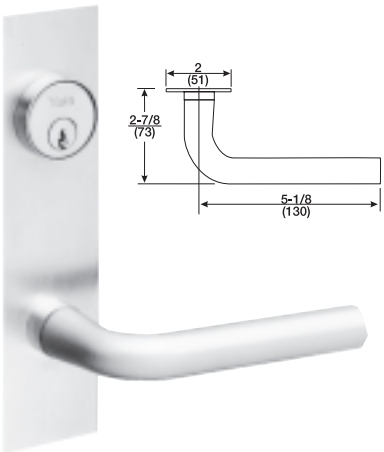

VIRGINIA - VIE

VI Lever Handle: Solid Cast
***CO Escutcheon:** Heavy cold forged
Cylinder Ring: Standard, No. 1765
Material: Brass, Bronze, Stainless Steel

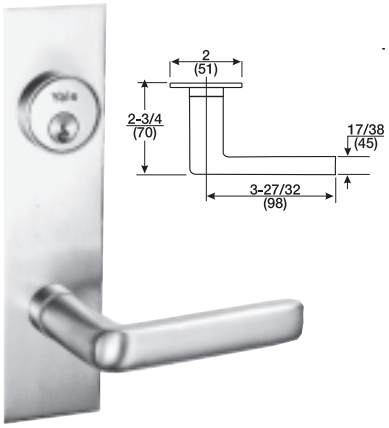

LENOIR - LN ESCUTCHEON OPT.

LN Escutcheon: Heavy cold forged
Cylinder Ring: None required for standard 5-pin cylinder – all others 1765
Material: Brass, Bronze, Stainless Steel

CR x LN Shown.

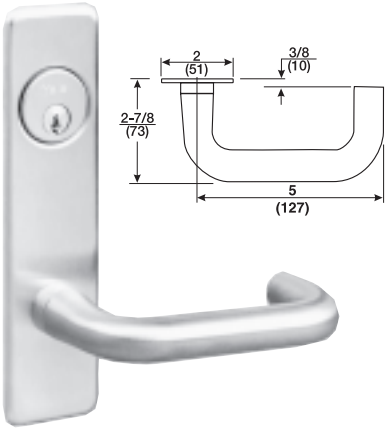

TRIM CONVERSION

87FL CONVERSION KIT

87FL Retrofit Kit Converts Yale® Mortise Locks to Meet A.D.A. Quickly, Easily.
The *Yale* 87FL Mortise Lock Retrofit Kit contains all internal components necessary to convert *Yale* 8700 Series steel case mechanical and electrified mortise locks from knob trim to lever trim.

The kit provides an easy and inexpensive method of conversion to meet requirements of the Americans with Disabilities Act (A.D.A.) without replacing the entire lock.

The kit may be used with any of Yale's extensive line of attractive and functional lever handle sets. Existing roses or escutcheon plates need not be replaced. Complete illustrated instructions are included with the kit.

To use existing rose trim, the inside rose adapter must be replaced. (PN 10-0501-2003 x finish).

The 87FL kit is UL approved and locks converted according to the instructions will maintain UL listing.

Mechanical & Electrified Locks

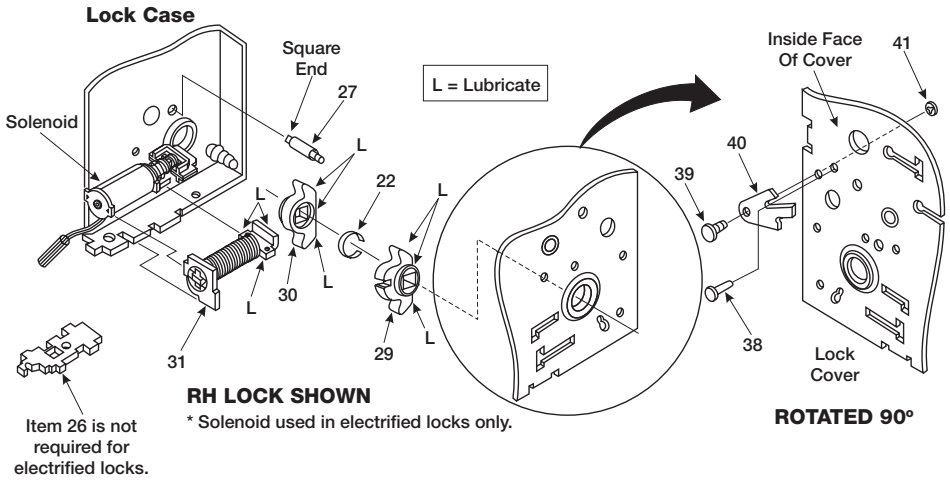

PARTS LIST

Item No.	Part No.	Description	Item No.	Part No.	Description
22	50-4601-1005	Hub Aligning Ring	38	50-4601-6029	Fuse Pin (Lead)
26	50-4602-1012	Stop Plunger	39	50-601-7153	Pivot (Stainless Steel)
27	50-8700-1052	Lever Stop Pin	40	50-4601-7028	Fire Stop Lever
29	50-4602-1004	Lever Locking Hub	41	50-9999-4638	Retaining Ring
30	50-4601-1004	Lever Hub	42	50-9901-0100	Lubricant
31	50-4601-0223	Spring Cage Assembly			

SPINDLE APPLICATIONS - 1178L SWIVEL SPINDLES

8700 Series Mechanical and Electrified Locks)			Electrified Locks Cardcode, Touchcode®, Guestcode		
Door Thickness	Spindle Length	Part No.	Door Thickness	Spindle Length	Part No.
1-1/4" - 1-3/4" (32mm-44mm)	4.281	50-1178-0001	1-1/4" - 1-1/2" (32mm - 38mm)	5.280	55-1178-0001
2" - 2-1/2" (51mm - 64mm)	4.781	50-1178-0002	1-3/4" - 2-1/4" (44mm - 57mm)	6.029	55-1178-0002
2-3/4" - 3-1/4" (70mm - 83mm)	5.531	50-1178-0003	2-1/2" - 3-3/4" (64mm - 95mm)	6.779	55-1178-0003
			2-3/4" - 3" (70mm - 76mm)	7.529	55-1178-0004

The standard spindle furnished with the 87FL Kit is part no. 50-1178-0001. If a different spindle is required, specify part no. of spindle (i.e. CR87FL x 55-1178-0002 spindle).

KNOB TRIM INSTALLATION

SECTIONAL KNOB INSTALLATION

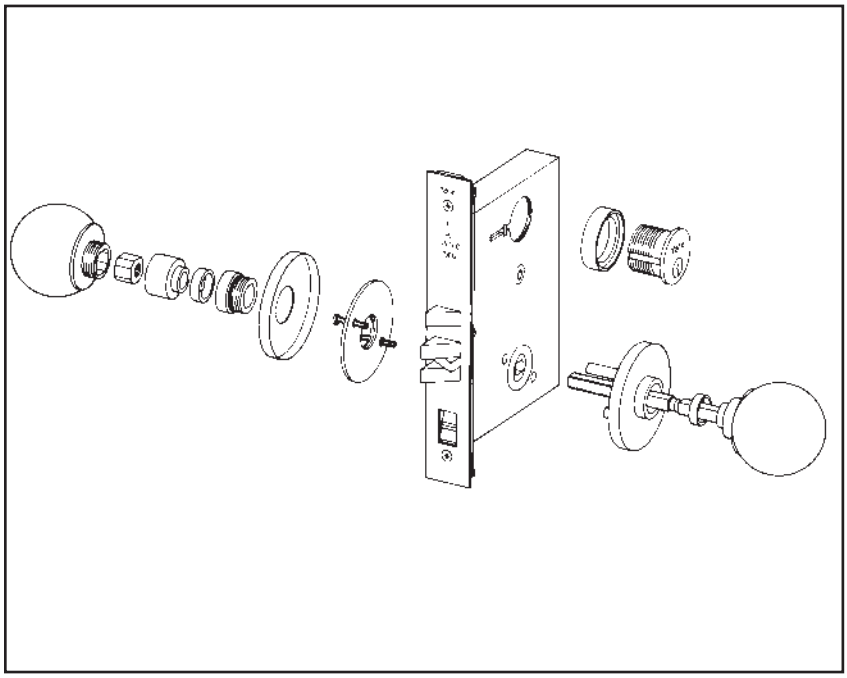

- All Yale® 8700 Series sectional knob trims feature through-bolted installation. This ensures positive alignment of the trim with the lock case and offers an attractive appearance.
- Outside trim is held in place by threaded posts. The posts fit through holes in the lock case and are secured by through-bolts from the inside trim.
- It is possible to install split trim, i.e. knob outside and lever inside, or vice versa.
- Since self-aligning trim is easy to install, on-the-job labor costs may be reduced.
- All *Yale* mortise lock trims are UL listed for fire door applications.
- A variety of sectional knob designs are available as shown on pages 11-12.

ESCUTCHEON KNOB INSTALLATION

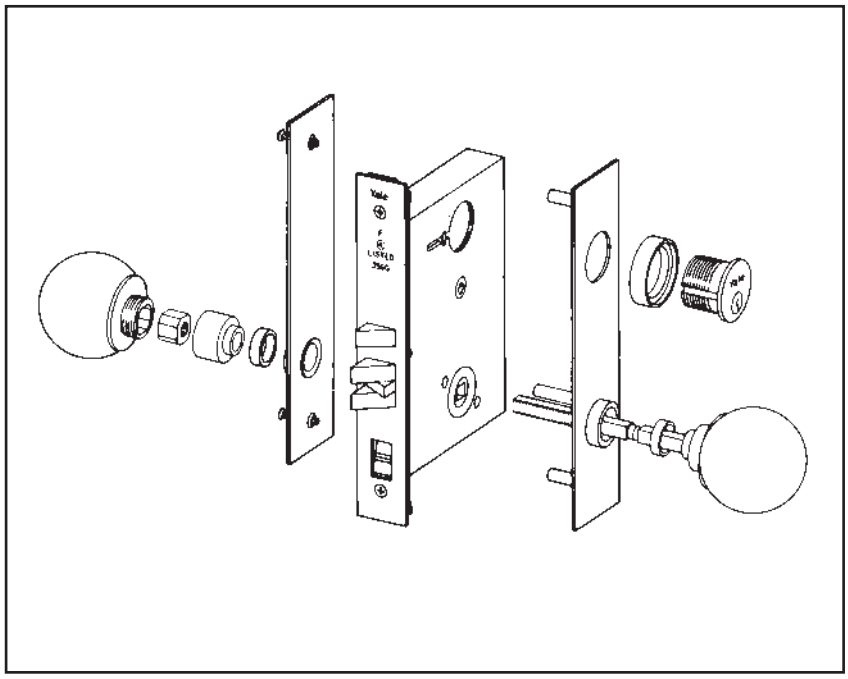

- All *Yale* 8700 Series escutcheon knob trims, with the exception of the Easton (CE) surface mounted escutcheon trim, feature through-bolted installation.
- Outside trim is held in place by threaded posts. The posts fit through the door and are secured by through-bolts from the inside trim.
- *Yale* outside escutcheon trims have no visible screws – a great deterrent to vandalism – except the Easton trim which is used primarily as a replacement for similar trim.
- It is possible to install split trim, i.e. knob outside and lever inside, or vice versa.
- All *Yale* mortise lock trims are UL listed for fire door applications.
- A variety of escutcheon knob designs are available as shown on pages 11-12.

KNOB TRIM

BRANDYWINE - BRR

BR Knob:	Heavy cold forged
***CO Rose:**	Cold forged, reinforced
Cylinder Ring:	Standard, No. 1135
Material:	Brass, Bronze, Stainless Steel

*Optional rose: see page 8 for description and material.

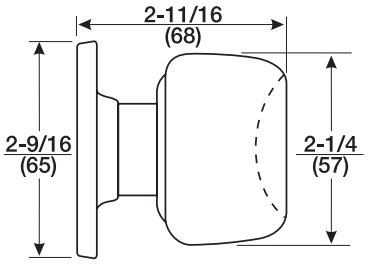

CAROLINA - CAR

CA Knob:	Cold forged
***CO Rose:**	Cold forged, reinforced
Cylinder Ring:	Standard, No. 1135
Material:	Brass, Bronze, Stainless Steel

*Optional rose: see page 8 for description and material.

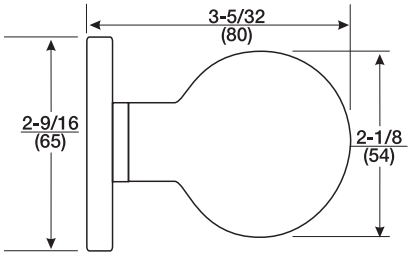

COPENHAGEN - COR

CO Knob:	Heavy cold forged, reinforced
***CO Rose:**	Cold forged, reinforced
Cylinder Ring:	Standard, No. 1765
Material:	Brass, Bronze, Stainless Steel

*Optional rose: see page 8 for description and material.

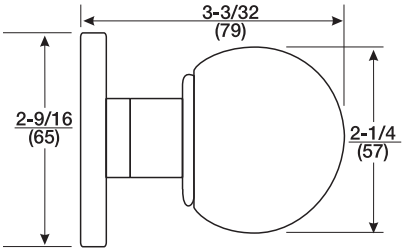

BRANDYWINE - BRE

BR Knob:	Heavy cold forged
***CO Escutcheon:**	Heavy cold forged
Cylinder Ring:	Standard, No. 1765
Material:	Brass, Bronze, Stainless Steel

*Optional escutcheon: LN. See page 12.

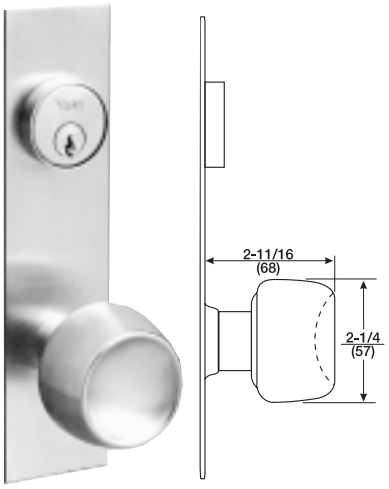

CAROLINA - CAE

CA Knob:	Cold forged
WG Escutcheon:	Heavy cold forged
Cylinder Ring:	Standard, No. 1134
Material:	Brass, Bronze, Stainless Steel

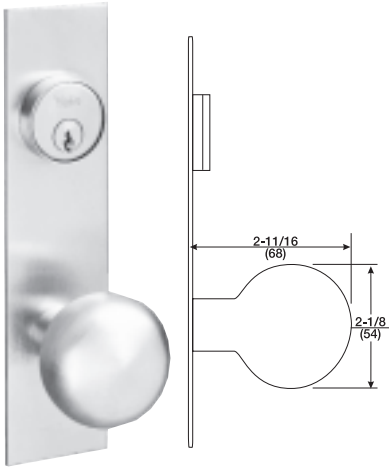

COPENHAGEN - COE

CO Knob:	Heavy cold forged, reinforced
***CO Escutcheon:**	Heavy cold forged
Cylinder Ring:	Standard, No. 1765
Material:	Brass, Bronze, Stainless Steel

*Optional escutcheon: LN. See page 12.

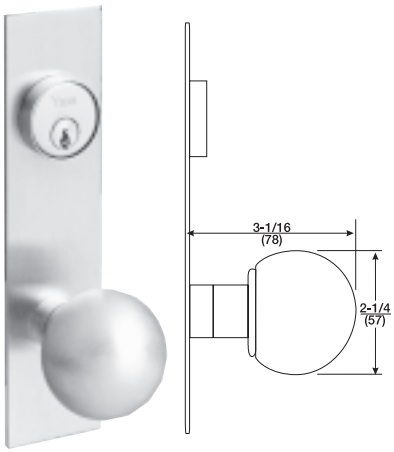

KNOB TRIM

LITCHFIELD - LFR

LF Knob: Heavy cold forged, reinforced
***CO Rose:** Cold forged, reinforced
Cylinder Ring: Standard, No. 1135
Material: Brass, Bronze, Stainless Steel

*Optional rose: see page 8 for description and material.

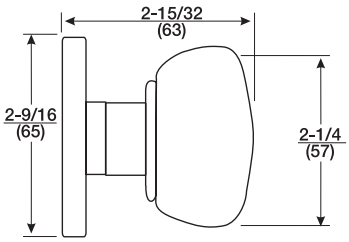

EASTON - CE

LF Knob: Heavy cold forged, reinforced
CE Escutcheon: Heavy cold forged. Also available with all lever designs.
Cylinder Ring: Standard, No. 1135
Material: Brass, Bronze, Stainless Steel

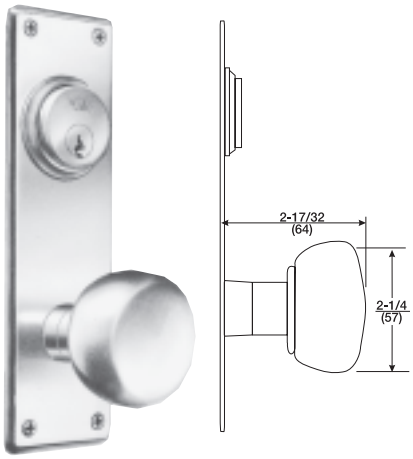

LITCHFIELD - LFE

LF Knob: Heavy cold forged, reinforced
***CO Escutcheon:** Heavy cold forged
Cylinder Ring: Standard, No. 1765
Material: Brass, Bronze, Stainless Steel

*Optional escutcheon: LN. See below right.

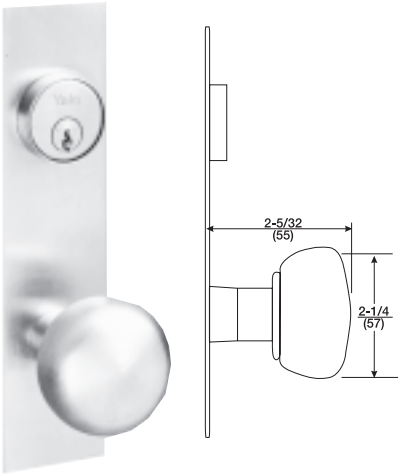

LENOIR - LN ESCUTCHEON

LN Escutcheon: Heavy cold forged
Cylinder Ring: None required for standard 5-pin cylinder – all others 1765
Material: Brass, Bronze, Stainless Steel

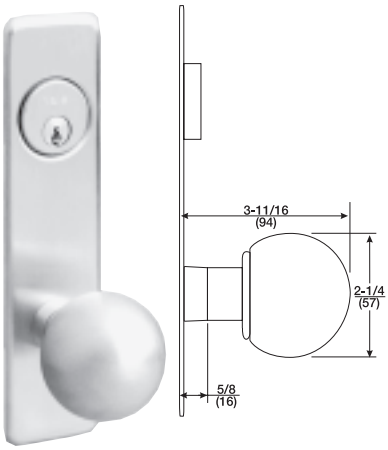

LOCKSET FUNCTIONS

PASSAGE LATCH (F01)

- For doors that do not require locking.
- Either knob/lever operates the latchbolt at all times.

Spindles:
Knobs, 5/16" (8mm) standard, N1170-1/2.
Levers, 3/8" (10mm) only, 1173L.

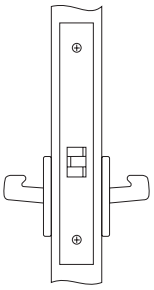

List Numbers		Throw Latchbolt
Knobs	Levers	
8701	8701FL	3/4"
	SL8701FL	3/4"

PRIVACY LOCK (F02) (F19)

- Latchbolt by knob/lever either side.
- Deadbolt by thumbturn inside.
- When the deadbolt is projected, outside knob/lever is automatically made rigid.
- Anti-panic operation. Turning inside knob/lever retracts the latchbolt and deadbolt simultaneously, automatically unlocking outside knob/lever.
- In emergency, deadbolt may be unlocked from outside by E203 emergency key supplied.

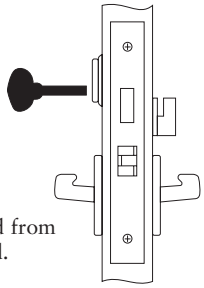

Spindles:
Knobs, 5/16" (8mm) standard, N1174-1/2.
Levers, 3/8" (10mm) only, 1178L.

List Numbers		Throw Latchbolt	
Knobs	Levers	Latchbolt	Deadbolt
8702	8702FL	3/4"	1"
	SL8702FL	3/4"	1"

STOREROOM OR CLOSET LOCK (F07)

- For use on storeroom, utility, exit doors.
- Deadlocking latchbolt.
- Latchbolt by key outside, knob/lever inside.
- Outside knob/lever rigid at all times.

†Cylinder Code: A
Spindles:
Knobs, 5/16" (8mm) standard, N1174-1/2.
Levers, 3/8" (10mm) only, 1178L.

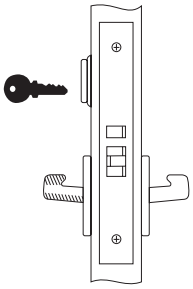

List Numbers		Throw Latchbolt
Knobs	Levers	
8705	8705FL	3/4"
	SL8705FL	3/4"

ENTRANCE LOCK (F04)

- For office doors where locking is required.
- Deadlocking latchbolt.
- Latchbolt by knob/lever either side, except when outside knob/lever is set by stopwork activator.
- When outside knob/lever is set, latchbolt is operated by key outside and knob/lever inside.

†Cylinder Code: A
Spindles:
Knobs, 5/16" (8mm) standard, N1174-1/2.
Levers, 3/8" (10mm) only, 1178L.

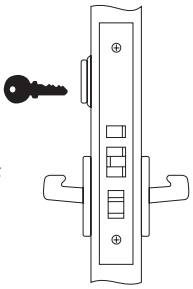

List Numbers		Throw Latchbolt
Knobs	Levers	
8707	8707FL	3/4"
	SL8707FL	3/4"

CLASSROOM LOCK (F05)

- For classroom, office, or utility room doors.
- Deadlocking latchbolt.
- Latchbolt by knob/lever either side, except when outside knob/lever is set by key outside.
- Inside knob/lever always active.

†Cylinder Code: A
Spindles:
Knobs, 5/16" (8mm) standard, N1174-1/2.
Levers, 3/8" (10mm) only, 1178L.

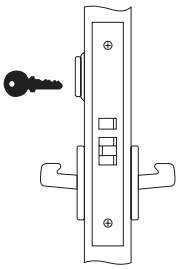

List Numbers		Throw Latchbolt
Knobs	Levers	
8708	8708FL	3/4"
	SL8708FL	3/4"

CLASSROOM DEADLOCK

- Deadbolt by key outside, thumbturn inside.
- Thumbturn inside will retract the deadbolt but will not project it.
- NOT UL listed.

†Cylinder Code: A

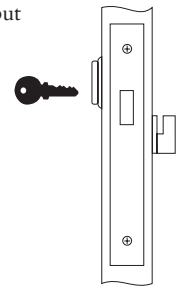

List Numbers	Throw Deadbolt
8713ST	1"

†Cylinder Code defines the cylinder supplied as standard for each lock and the optional cylinder available, see Page 20.

LOCKSET FUNCTIONS

CLASSROOM DEADLOCK

- Deadbolt by key both sides.
- Thumbturn inside will retract the deadbolt but will not project it.
- NOT UL listed.

†Cylinder Code: B

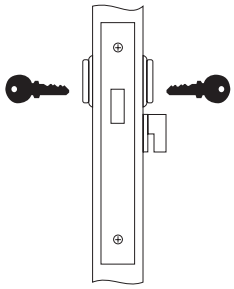

List Numbers	Throw Deadbolt
8713ST-2	1"

DEADLOCK (F16)

- Deadbolt by key both sides. Note: Use only on room with more than one exit.
- NOT UL listed.

†Cylinder Code: B

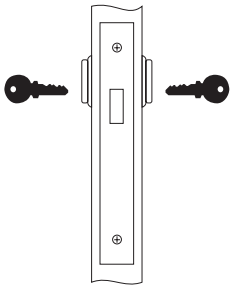

List Numbers	Throw Deadbolt
8714-2	1"

APARTMENT, EXIT OR PUBLIC TOILET LOCK (F09)

- Deadlocking latchbolt.
- Latchbolt by knob/lever either side, except when outside knob/lever is set by key inside.
- When outside knob/lever is set, latchbolt is operated by key outside and knob/lever inside.

†Cylinder Code: C
Spindles:
Knobs, 5/16" (8mm) standard, N1174-1/2.
Levers, 3/8" (10mm) only, 1178L.

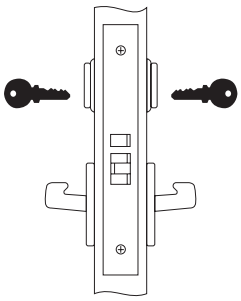

List Numbers		Throw Latchbolt
Knobs	Levers	
8717-2	8717-2FL	3/4"
	SL8717-2FL	3/4"

DEADLOCK (F18)

- Deadbolt by key outside only.
- No inside operation.
- NOT UL listed.

†Cylinder Code: A

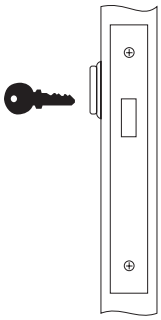

List Numbers	Throw Deadbolt
8714	1"

DEADLOCK (F17)

- Deadbolt by key outside, thumbturn inside.
- NOT UL listed.

†Cylinder Code: A

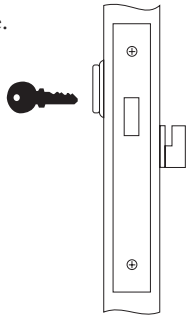

List Numbers	Throw Deadbolt
8715	1"

HOTEL/MOTEL LOCK (F15)

- Deadlocking latchbolt.
- Outside knob/lever rigid at all times.
- Latchbolt by key outside, knob/lever inside.
- Guest room and master keys retract the latchbolt, only when the deadbolt is NOT projected.
- Deadbolt by emergency/shut-out or display key only outside, thumbturn inside.
- When deadbolt is projected, the indicator button projects out (indicating room is occupied). Access from outside can be gained only with an emergency/shut-out or display key.
- Anti-panic operation. Turning the inside knob/lever retracts both the latchbolt and deadbolt simultaneously.

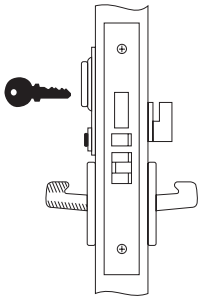

†Cylinder Code: E
Spindles:
Knobs, 5/16" (8mm) standard, N1174-1/2.
Levers, 3/8" (10mm) only, 1178L.

List Numbers		Throw	
Knobs	Levers	Latchbolt	Deadbolt
8720	8720FL	3/4"	1"
	SL8720FL	3/4"	1"

†Cylinder Code defines the cylinder supplied as standard for each lock and the optional cylinder available, see Page 20.

LOCKSET FUNCTIONS

DORMITORY LOCK (F13)

- Latchbolt by knob/lever either side.
- Deadbolt by key outside and thumbturn inside.
- When the deadbolt is projected, outside knob/lever is automatically made rigid.
- Anti-panic operation. Turning inside knob/lever retracts the latchbolt and deadbolt simultaneously, automatically unlocking outside knob/lever.

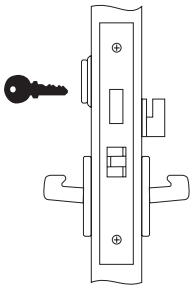

†Cylinder Code: A
Spindles:
Knob, 5/16" (8mm) standard, N1174-1/2.
Levers, 3/8" (10mm) only, 1178L.

List Numbers		Throw Latchbolt	
Knobs	Levers	Latchbolt	Deadbolt
8722	8722FL	3/4"	1"
	SL8722FL	3/4"	1"

HOTEL/MOTEL LOCK

- Deadlocking latchbolt.
- Latchbolt by knob/lever either side, except when outside knob/lever is independently set by stopwork activator or automatically set when the deadbolt is projected.
- Guest room and master keys retract the latchbolt, only when the deadbolt is NOT projected.
- Deadbolt by emergency/shut-out key or display key on outside, thumbturn on inside.
- When deadbolt is projected, the indicator button projects out (indicating room is occupied) and access from outside can be gained only with an emergency/shut-out or display key.
- Anti-panic operation. Turning the inside knob/lever retracts both the latchbolt and deadbolt simultaneously, with outside knob/lever remaining locked.

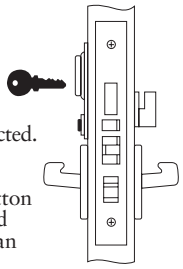

†Cylinder Code: E
Spindles:
Knob, 5/16" (8mm) standard, N1174-1/2;
Levers, 3/8" (10mm) only 1178L.

List Numbers		Throw Latchbolt	
Knobs	Levers	Latchbolt	Deadbolt
8727	8727FL	3/4"	1"
	SL8727FL	3/4"	1"

ASYLUM LOCK

- Deadlocking latchbolt.
- Latchbolt by key both sides.
- Ridge knob/lever both sides for use as pulls only.

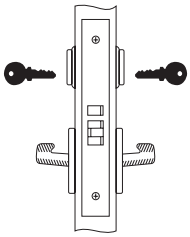

†Cylinder Code: B
Spindles:
Knobs, 5/16" (8mm) standard, N1170-1/2.
Levers, 3/8" (10mm) only, 1173L.

List Numbers		Throw Latchbolt	
Knobs	Levers	Latchbolt	Deadbolt
8730-2	8730-2FL	3/4"	1"
	SL8730-2FL	3/4"	1"

HOLDBACK LOCK (F06)

- For classroom, office, or utility room doors.
- Deadlocking latchbolt.
- Latchbolt by knob/lever either side, except when outside knob is set by key outside.
- Inside knob/lever always active.
- Latchbolt and guardbolt can be held in retracted position by outside cylinder.
- NOT UL listed.

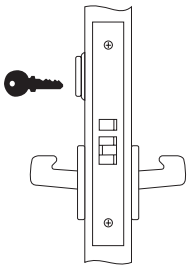

†Cylinder Code: A
Spindles:
Knobs, 3/8" (10mm) standard.
1175K.

List Numbers		Throw Latchbolt
Knobs	Levers	
8724	8724FL	3/4"

EXIT LATCH

- For twin communicating or exit doors where one-sided operation is required.
- Deadlocking latchbolt.
- Inside knob/lever operates the latchbolt at all times.
- No outside operations.

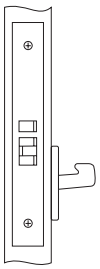

Spindles:
Knobs, 5/16" (8mm) standard, F1198
Levers, 3/8" (10mm) only, F1193.

NOTE: The Finlandia (FN) escutcheon will be supplied on all escutcheon trim for hollow metal door installations.

List Numbers		Throw Latchbolt
Knobs	Levers	
8728	8728FL	3/4"
	SL8728FL	3/4"

DETENTION LOCK

- Deadlocking latchbolt.
- Outside knob/lever rigid at all times.
- Latchbolt by key outside, knob/lever inside.
- Deadbolt by guards (emergency) key only outside.
- Occupant key operates latchbolt only (will not work when deadbolt projected.)
- Inside knob/lever only opens door when deadbolt is in retracted position.
- Trim mounted with fasteners outside.
- Furnished standard with TORX® security screws.

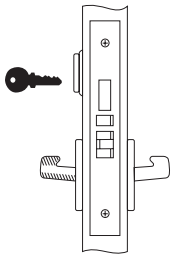

†Cylinder code: E
Spindles:
Knobs, 3/8" (8mm) only 1175K
Levers, SL trim only.

List Numbers		Throw Latchbolt	
Knobs	Levers	Latchbolt	Deadbolt
8731	SL8731FL	3/4"	1"

†Cylinder Code defines the cylinder supplied as standard for each lock and the optional cylinder available, see Page 20.

LOCKSET FUNCTIONS

HOTEL/MOTEL LOCK

- Deadlocking latchbolt.
- Outside knob/lever rigid at all times.
- Latchbolt by key outside, knob/lever inside.
- Guest room and master keys retract the latchbolt, only when the deadbolt is NOT projected.
- Deadbolt by emergency/shut-out or display key only outside, thumbturn inside.
- Anti-panic operation. Turning the inside knob/lever retracts both the latchbolt and deadbolt simultaneously.

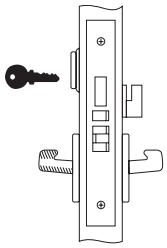

†Cylinder Code: E
Spindles:
Knob, 5/16" (8mm) standard, N1174-1/2; Levers, 3/8" (10mm) only, 1178L.

List Numbers		Throw Latchbolt	
Knobs	Levers	Latchbolt	Deadbolt
8732	8732FL	3/4"	1"
	SL8732FL	3/4"	1"

ALL-PURPOSE LOCK

- Deadlocking latchbolt.
- Latchbolt by key outside, knob/lever inside.
- No knob/rose outside.
- Latchbolt and guardbolt can be held in retracted position by inside thumbturn cylinder.
- NOT UL listed.

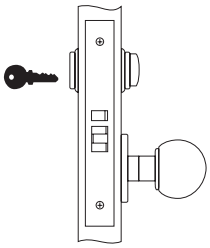

†Cylinder Code: D
Spindles:
Knobs, 3/8" (10mm) only, 1198.

List Numbers		Throw Latchbolt
Knobs	Levers	
8734	8734FL	3/4"

ENTRANCE & APARTMENT DOOR LOCK (F20)

- Deadlocking latchbolt.
- Latchbolt by knob/lever either side, except when outside knob/lever is set by stopwork activator.
- Deadbolt by key outside, thumbturn inside.
- When outside knob/lever is set, key outside operates & retracts both latchbolt and deadbolt.
- Key outside retracts both latchbolt and deadbolt.
- When deadbolt is projected, outside knob/lever is automatically locked.
- Operating inside knob/lever automatically retracts latchbolt and deadbolt with outside knob/lever remaining locked.

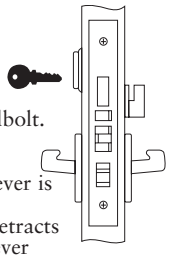

†Cylinder Code: A
Spindles:
Knobs, 5/16" (8mm) standard, N1174-1/2. Levers, 3/8" (10mm) only, 1178L.

List Numbers		Throw Latchbolt	
Knobs	Levers	Latchbolt	Deadbolt
8747	8747FL	3/4"	1"
	SL8747FL	3/4"	1"

EXIT LOCK

- Deadlocking latchbolt.
- Latchbolt by key outside, knob/lever inside.
- No knob/lever/rose outside.

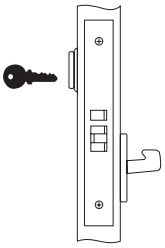

†Cylinder Code: A
Spindles:
Knobs, 5/16" (8mm) standard, F1198
Levers, 3/8" (10mm) only, F1193.

List Numbers		Throw Latchbolt
Knobs	Levers	
8733	8733FL	3/4"

ALL-PURPOSE LOCK

- Deadlocking latchbolt.
- Latchbolt by key both sides.
- No operating trim either side.

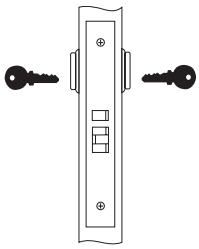

†Cylinder Code: B

List Numbers	Throw Latchbolt
8733-2	3/4"

ALL-PURPOSE LOCK

- For classroom, office, or utility room doors.
- Deadlocking latchbolt.
- Latchbolt by key outside, knob/lever inside.
- No knob/rose outside.
- Latchbolt and guardbolt can be held in retracted position by inside cylinder.
- NOT UL listed.

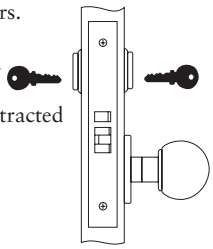

†Cylinder Code: A
Spindles:
Knobs, 3/8" (10mm) standard, F1198.

List Numbers		Throw Latchbolt
Knobs	Levers	
8734-2	8734-2FL	3/4"

ENTRANCE OR STOREROOM LOCK (F21)

- Latchbolt by knob/lever either side.
- Deadbolt by key outside and thumb turn inside.

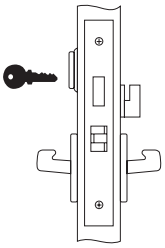

†Cylinder Code: A
Spindles:
Knob, 5/16" (8mm) standard, N1170-1/2; Levers, 3/8" (10mm) only, 1173L.

List Numbers		Throw Latchbolt	
Knobs	Levers	Latchbolt	Deadbolt
8760	8760FL	3/4"	1"
	SL8760FL	3/4"	1"

†Cylinder Code defines the cylinder supplied as standard for each lock and the optional cylinder available, see Page 20.

LOCKSET FUNCTIONS

ENTRANCE OR STOREROOM LOCK (F14)

- Latchbolt by knob/lever either side.
- Deadbolt by key both sides.

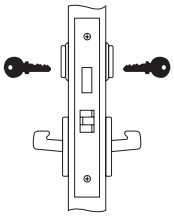

†Cylinder Code: B
Spindles:
Knobs, 5/16" (8mm) standard, N1170-1/2.
Levers, 3/8" (10mm) only, 1173L

List Numbers		Throw Latchbolt	
Knobs	Levers	Latchbolt	Deadbolt
8760-2	8760-2FL	3/4"	1"
	SL8760-2FL	3/4"	1"

ENTRANCE & APARTMENT LOCK (F12)

- Latchbolt by knob/lever either side, except when the outside knob/lever is set by stop-work activator or automatically set when the deadbolt is projected.
- Deadbolt by key outside, thumbturn inside.
- When outside knob/lever is set, key outside operates and retracts both latchbolt and deadbolt.
- Key outside retracts both latchbolt and deadbolt.
- Anti-panic operation. Turning inside knob/lever retracts the latchbolt and deadbolt simultaneously, with outside knob/lever remaining locked.

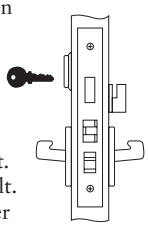

†Cylinder Code: A
Spindles:
Knobs, 5/16" (8mm) standard, N1174-1/2.
Levers, 3/8 (10mm) only, 1178L

List Numbers		Throw Latchbolt	
Knobs	Levers	Latchbolt	Deadbolt
8767	8767FL	3/4"	1"
	SL8767FL	3/4"	1"

ACTIVE DUMMY TRIM

- Trim both sides.
- Push or pull only
- Primarily for lever handle trim.
- Knobs or levers free wheel to prevent damage.

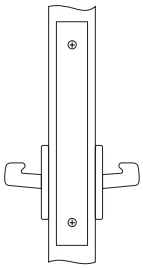

8771DT - Armor front acts as strike for latchbolt only functions.
8772DT - Armor front acts as strike for latchbolt x deadbolt functions.

Spindles:
Knobs, 5/16" (8mm) standard, N1170-1/2.
Levers, 3/8" (10mm) only, 1173L.

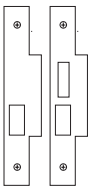

List Numbers		
Knobs	Levers	Armor Front
8770DT	8770FLDT	Plain
8771DT	8771FLDT	Latchbolt Hole
8772DT	8772FLDT	Latchbolt/Deadbolt Hole

DUMMY TRIM BOTH SIDES

- Push and pull only.
- Knobs or levers both sides of door.
- Both knobs or levers rigid at all times. Trim non-operational.
- Plain rectangular front used with spindle-bar stabilizer.
- Available in all sectional and escutcheon trim.

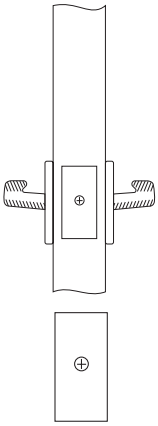

***List Numbers:**
Knobs, 836A, prefixed by Design Symbol
(i.e. LFR836A, COE 836A)
Levered, 838A, prefixed by Design Symbol.
(i.e. JNR838A, JNE 838A)

DUMMY TRIM ONE SIDE

- Push or pull only.
- Knob or lever one side of door.
- Knob or lever rigid at all times, trim non-operational.
- Available in knob x rose or lever x rose only.

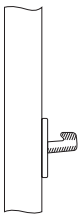

***List Numbers 855 prefixed by Design Symbol (i.e. COR855 or CRR 855)**

DUMMY TRIM BOTH SIDES

- Push or pull only
- Knobs or levers both sides of inactive leaf of a pair of doors.
- Both knob or lever rigid at all times.
- Trim non-operational.
- Strike of active-door lockset used with spindle-bar stabilizer.
- Available in all sectional and escutcheon trim.

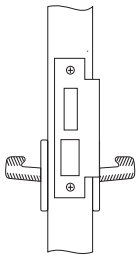

Spindles:
Knobs, 5/16" (8mm) standard, N11170-1/2.
Levers, 3/8" (10mm) only, 1173L.

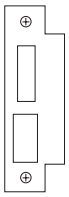

***List Numbers:**
Knobs, 836B, prefixed by Design Symbol
(i.e. BRR836B, FNE836B).
Levered, 838B, prefixed by Design Symbol
(i.e. JNR838B, JNE 838B).

†Cylinder Code defines the cylinder supplied as standard for each lock and the optional cylinder available, see Page 20.

ELECTRIFIED MORTISE LOCKSET

MORTISE LOCKSETS

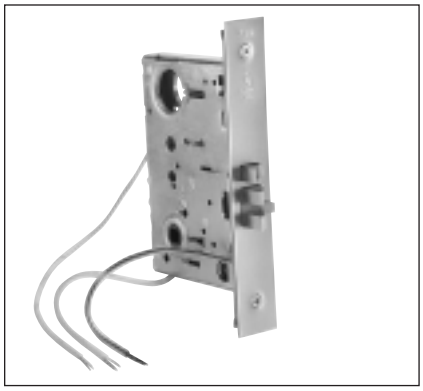

8790 Series - Standard Features	
ANSI Conformance	ANSI A 156.13, Series 1000, Operational Grade 1.
Armor Front	8790 - 8" x 1-1/4"
Door Thickness	8790 - 1-3/4" standard to 3-1/4" thick doors to order.
Latchbolt	8790 - 3/4" throw stainless steel two-piece anti-friction camming action.
UL Listed	Rated for both fire and electrical single-point locking operations on labeled openings by Underwriters' Laboratories UL 38G5.
Backset	2-3/4" only.
Case	Wrought steel, zinc dichromated.

Hubs	Sintered steel, copper infiltrated for additional strength.
Solenoid	Continuous duty.

ELECTRICAL SPECIFICATIONS

12VAC/DC @ 612MA
24VAC/DC @ 330MA

APPLICATIONS

Stairtower doors, office doors, classrooms, interlocks, elevator lobby doors, laboratories, computer rooms, cashier stations, hospital equipment rooms and pharmaceutical storage rooms. For narrow frame profiles, consult factory.

OPERATION

Free egress at all times. Turning power on by the 702-6 Key switch locks the outside trim on the 8790. If the fire alarm is actuated the trim will unlock, allowing entry from the stairwell to the floor. On power failure, the lock will unlock, allowing entry from the stairwell to the floor.

FAIL SAFE

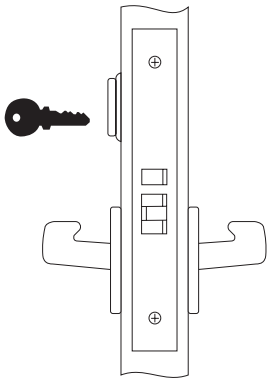

Power off unlocks outside trim
Deadlocking latchbolt
Latchbolt by trim either side except when outside trim is locked by energizing solenoid.
Key outside retracts latchbolt when solenoid is energized.
Inside trim always active

Model	Lever Condition	Available Cylinders
8790	Outside Rigid	1 cylinder
8780	Outside Rigid	None
8784	Inside & Outside Rigid	None
8794-2	Inside & Outside Rigid	2 cylinders

Available in knobs and levers.

FAIL SECURE

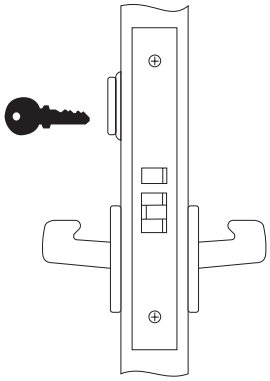

Power off locks outside trim
Deadlocking latchbolt
Latchbolt by trim either side only when solenoid is energized.
Latchbolt retracted by key outside and trim inside when solenoid is not energized.
Inside trim always active

Model	Lever Condition	Available Cylinders
8791	Outside Rigid	1 cylinder
8781	Outside Rigid	None
8785	Inside & Outside Rigid	None
8795-2	Inside & Outside Rigid	2 cylinders

Available in knobs and levers.

ELECTRIFIED ACCESSORIES

KEY SWITCHES

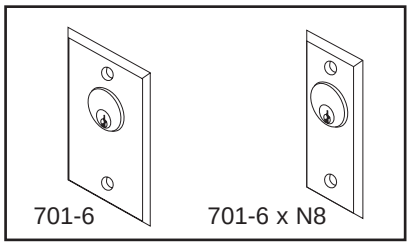

701-6 - (1) SPDT Maintained
702-6 - (1) SPDT Momentary

Options:
- 1-3/4" (44mm) Narrow face plate (suffix "N8")
- L2 - two LEDs (red and green)

Specifications:
- Key switch for operation using a standard 1-1/4" mortise cylinder (cylinder not included).
- Contact Rating 6 Amps @ 125-250VAC.
- SPDT 2-position.
- 10 Amp @ 125-250VAC available.

PUSH BUTTON/TOGGLE SWITCH

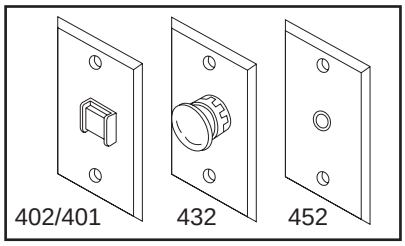

402 - (1) SPDT Momentary
401 - (1) SPDT Momentary (Alt. Action)
432 - (1) MO-Specify NO or NC
431-MA-Specify NO or NC
452-Vandal Resistant MO SPDT

Option:
- L2 - two LEDs (red and green)

Specifications:
- SPDT form Z contact
- 402/401- Rated 6 Amp @ 30VAC/VDC
- 432 - Rated 6 Amp @ 30VAC/VDC
- 9500 Push button size – 1-9/16" (4cm) diameter

AUDIBLE/VISUAL ANNUNCIATORS

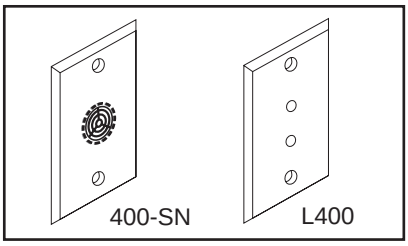

400-SN - Sonalert 85db, 3-28VDC. Mounted on one gang stainless steel plate.

L400 - LEDs mounted on one gang stainless steel plate. 12/24VDC (red, green and amber)

L400-L1- One LED
L400-L2- Two LEDs
L400-L3- Three LEDs
L400-LT- One tri-colored LED

MPS10 POWER SUPPLY

The MPS10 provides 1 amp of output current at 12/24VDC. The MPS10 can control a total of 3-8790/8791 locks. A separate switching device (key switch, or push button) must be used to control the lock.

MPS10 SPECIFICATIONS

- 120VAC Input Power
- 12/24VDC @ 1 Amp regulated output
- Fire Alarm Interface
- Optional Battery Backup
- Optional Time Delay (TD) on Relock

TYPICAL INSTALLATION

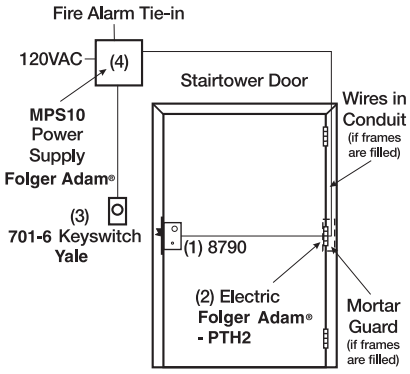

CYLINDERS

CYLINDER CODE

Each Yale® Mortise Lockset Function List Number carries a Cylinder code Letter (see Lockset Functions, pages 13-17). This Code Letter defines the standard mortise cylinder supplied with the Lock List Number and the optional cylinders available for use with the specific locking function as outlined in the accompanying chart. For details of cylinders, see the listing for each type.

Cylinder length and cylinder ring size are determined by door thickness and trim design.

CYLINDER SELECTION GUIDE

Cylinder Code Letter	Standard Cylinder(s)	Adjustable Head†	Removable Core Std.	Security/ High Security	Removable Core Security
A	2153/2123	2186	2196 2197	5153/U5153	5196 5197
B	2153/2123 Both Sides	2186	2196 2197	5153/U5153	5196 5197
C	2153 Outside	2186	2196/2197	5153/U5153	5196/5197
	2153S Inside	2186S	2196S/2197S	5153S/U5153 S	5196S/5197S
D	2153 Outside	2186	2196/2197	5153U5153	5196/5197
	S2053S Inside	S2053S Inside	S2053S Inside	S2053S Inside	S2053S Inside
E	2719	NA	2196H	5719/U5719	5196H

†Applicable to sectional trim only.

CYLINDERS

Conventional Cylinders:
2153/2153S: 1" (25mm) to 1-3/4" (44mm) Lengths in 1/8" (3mm) increments.
2123/2123S: 1-7/8" (48mm) to 3-1/2" (89mm) Lengths in 1/8" (3mm) increments.
2719 Hotel Cylinder: 1-3/8" (35mm) only.

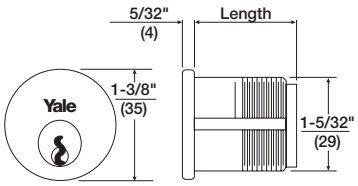

Removable Core Cylinders:
2196/2196S: 6-pin, 1-1/2" (38mm) Length only.
2197/2197S: 7-pin, 1-11/16" (43mm) Length only.
2196H Hotel Cylinder: 1-11/16" (43mm) Length only.

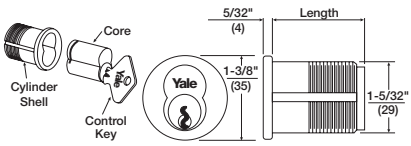

CYLINDER RINGS

Cylinder rings are supplied as standard where required with those locksets supplied with cylinders. Ring size and thickness is supplied to suit the length of the cylinder, the thickness of the door and the trim ordered. (If door thickness is not specified, rings will be furnished for 1-3/4" (44mm) door.)

1134 Tubular Cylinder Ring
"A" Dimension: Thicknesses from 1/16" (2mm) to 15/16" (24mm) as required.
Material: Brass

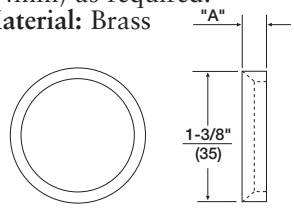

1135 Adjustable Cylinder Ring
3/16" (5mm) Size: Adjusts from .22" (6mm) to .30" (8mm)
1/4" (6mm) Size: Adjusts from .26" (6mm) to .34" (9mm)
5/16" (8mm) Size: Adjusts from .30" (8mm) to .38" (1cm)
Material: Brass, Bronze

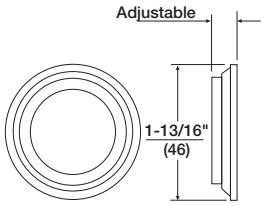

1765 Recessed Cylinder Ring
"A" Dimension: Thicknesses from 1/16" (2mm) to 1-15/32" (37mm) as required.
Material: Brass, Bronze

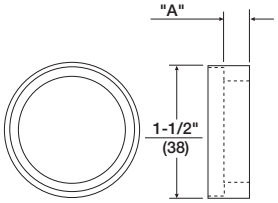

1767 Tubular Spacer Ring
"A" Dimension: 1/8"(3mm), 3/16" (5mm) and 5/16" (8mm)
Material: Brass, Bronze, Stainless Steel. (Used with 2186 and 2186S cylinders only.)

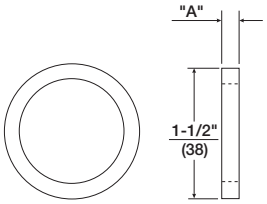

STRIKES

STRIKES

Each Yale® 8700 Mortise Lock Series will be supplied standard with a Flat Strike with a 1-1/8" (29mm) lip length. The strike supplied will accommodate the locking function, i.e. latchbolt and/or deadbolt and can be installed on doors 1-3/4" (44mm) thick. These strikes are reversible.

Longer/Shorter Lip Lengths: Mortise Lock Strikes are mounted on the same vertical centerline as the lock. To determine the proper length of lip, measure from the centerline of the strike to the edge of the jamb and add 1/8" (3mm) for Flat Strikes and 1/4" (6mm) for Curved Lip Strikes. Select the nearest available length.

FLAT STRIKES

Standard 2810 ANSI Latchbolt Only Strike: Reversible for locks with a latchbolt only.
Lip Lengths: 1-1/8" (29mm) regular; to special order, long, 1-1/4" (32mm), 1-1/2" (38mm), 1-3/4" (44mm), 2" (51mm), & 2-1/2" (64mm); short, 7/8" (22mm) and 1" (25mm).
Material: Brass, Bronze, Stainless Steel.

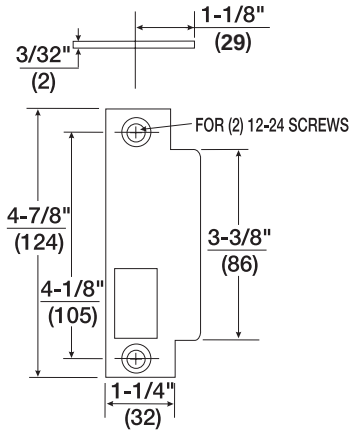

Standard 2811 ANSI Latchbolt x Deadbolt Strike: Reversible for locks with a latchbolt and a deadbolt.
Lip Lengths: 1-1/8" (29mm) regular; to special order, long, 1-1/4" (32mm), 1-1/2" (38mm), 1-3/4" (44mm), 2" (51mm), & 2-1/2" (64mm); short, 7/8" (22mm) and 1" (25mm).
Material: Brass, Bronze, Stainless Steel.

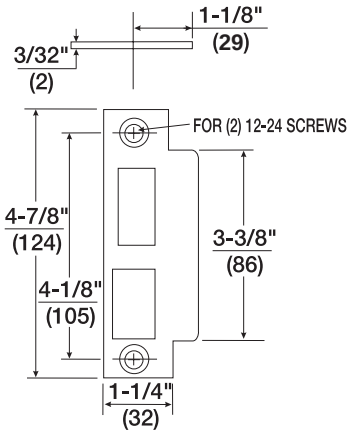

Standard 2814 ANSI Deadbolt Only Strike: Supplied standard for 8713ST, 8713ST-2, 8714, 8714-2 and 8715 lock functions. Reversible. Since a deadbolt only function requires no lip, this strike is only available as a 4-7/8" (124mm) high by 1-1/4" (32mm) wide rectangle.
Material: Brass, Bronze, Stainless Steel.

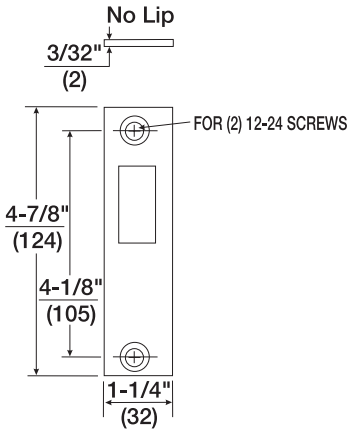

2812 ANSI Latchbolt Only Strike: Handed for locks with a latchbolt only.
Lip Lengths: 1-1/4" (32mm) regular; to special order, long, 1-1/2" (38mm) 1-3/4" (44mm), 2" (51mm), & 2-1/2" (64mm); short, 1-1/8" (29mm).
Material: Brass, Bronze, Stainless Steel.

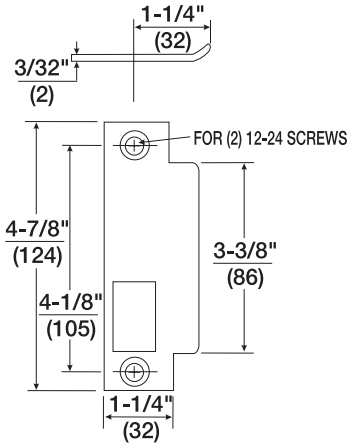

2813 ANSI Latchbolt x Deadbolt Strike: Handed for locks with a latchbolt and a deadbolt.
Lip Lengths: 1-1/4" (32mm) regular; to special order, long, 1-1/2" (38mm) 1-3/4" (44mm), 2" (51mm), & 2-1/2" (64mm); short, 1-1/8" (29mm).
Material: Brass, Bronze, Stainless Steel.

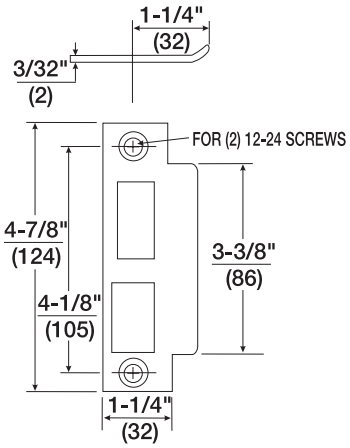

STRIKES/MISCELLANEOUS TRIM

OPTIONAL STRIKES

497 ANSI Blank Filler Plate: reversible to replace a strike where a lock has been removed or where a frame with a strike preparation when no lock is installed on a door.
Lip Lengths: 1-1/8" (29mm)only.
Material: Brass, Bronze, Stainless Steel.

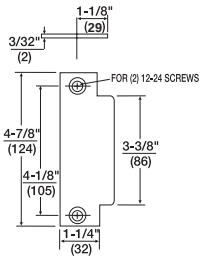

202 Strike Box: Reversible for installation with all Flat or Curved Lip Strikes. Available to special order only.
Material: Wrought Steel, Zinc Plated, Dichromated.

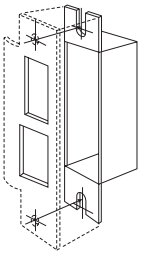

718 Open Back Strike: field handable for a standard v-beveled pair of doors with a latchbolt only function on the active door. This strike permits emergency opening of the inactive door without damaging the lock mechanism. Available for doors 1-3/4" or 2-1/4" thick only. Specify the door thickness required.
Material: Stainless Steel, Black Nylon Coated.

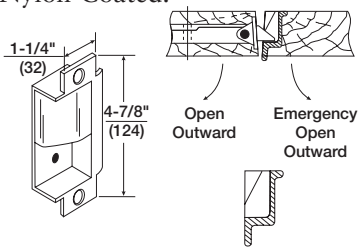

RABBETED DOOR KITS

Rabbeted Door Kits
The Yale® 8700 Mortise Lock Series can be installed on a pair of doors with a standard 1/2" (13mm) step rabbet. Kits are available which adapt these locks to the rabbeted doors. These kits contain a 1/2" (13mm) standard step rabbet strip for the active door, a strike to accommodate the lock function, a strike box, and depending on the door thickness, a strike lip. They are available for doors 1-3/4" (44mm), 2" (51mm) and 2-1/4" (57mm) thick in 612 and 626 finishes only. All components of these kits are reversible.

To order a complete *Yale* Mortise Lock with a Rabbet Door Kit, suffix the Lock List Number with a Rabbeted Door by door thickness, hand and finish required, i.e. LW8707 x Rabbeted Door x 1-3/4" x RH x 626.

Kits for rabbeted doors can be ordered by List Number separately from the accompanying chart. When ordered separately, specify the finish required.

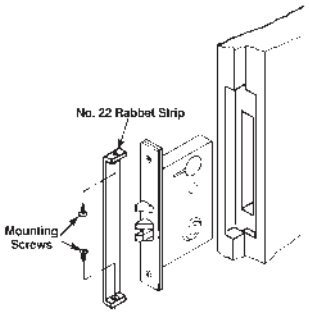

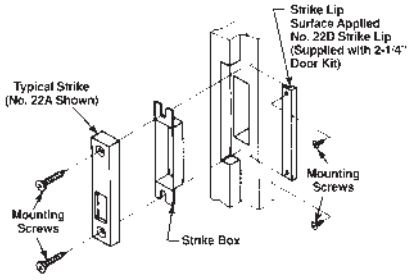

Lock Function	Door Thickness	Rabbeted Door Kit List No.	Strike List No.
Latchbolt Only	1-3/4" 2" 2-1/4"	RK239+ RK239+ RK242*	22A
Latchbolt x Deadbolt	1-3/4" 2" 2-1/4"	RK240+ RK240+ RK243*	22B
Deadbolt Only	1-3/4" 2" 2-1/4"	RK241+ RK241+ RK244*	22C

\+ Kit consists of a No. 22-1/2" standard step strip for the door with a lock, the appropriate strike, a strike box and attaching screws.
* These kits contain the above components plus a No. 22D strike lip with attaching screws.

MISCELLANEOUS TRIM DESIGN

GF1824 Thumbturn and Round Plate

Supplied as standard on all locks with round rose sectional trim or lock functions with no roses.
Thumbturn: Brass, Bronze, Stainless Steel.
Plate: 1-7/8" (48mm) Diameter, Brass, Bronze, Stainless Steel.

GF1826-Plate Only - Used for outside of 8702 Privacy Lock.

ATTACHING SCREWS

GF1824 and GF1826
No. 6 x 3/8" (10mm) type "AB", Oval Phillips Head sheet metal screw, stainless steel plated to match trim
(P/N 81-3173-0308). Specify finish required.

HOW TO ORDER

ORDERING INFORMATION

From this outline select the List Number for the Yale® 8700 Mortise Lockset Series you require.

Design	List No.	Keying Level	Voltage	Description	Finish	Hand	*Cylinder	Door Thickness	Supplementary Specifications

Design: See Pages 6-8,11-12

List Numbers: See Pages 13-17 Electrified List No. See Page 18

Highest Keying Level: "Level One" - KA or KD
"Level Two" - MK
"Level Three" - GM
"Level Four" - GGM

Voltage: See Page 18

Description: Lockset

Finish: See Page 2

Hand: See Below

***Cylinder:** See Page 20

Door Thickness: See Page 3

Supplementary Specifications: Lead Lined; knurled; abrasive coated; specific keying; keying; 7-pin cylinders' specific strike requirements other than standard, i.e. special lip length, curved, open back; special attachment or special-head screws, specify in detail; split finish, indicate outside finish first regardless of hand of door – but for RHR and LHR doors indicate finish desired for front and strike.

*If other than standard cylinder is required, specify by List Number.

HAND OF DOORS

The outside is the key side of an entrance door or the corridor side of a room door. The outside of a single communicating door is the side opposite the hinges. The outside of twin communicating doors is the space between the doors.

Left Hand: Hinges on left, opens inward. For handed locks, specify LH.

Left Hand Reverse: Hinges on left, opens outward. For handed locks, specify LHR.

Right Hand: Hinges on right, opens inward. For handed locks, specify RH.

Right Hand Reverse: Hinges on right, opens outward. For handed locks, specify RHR.

online literature and templates

For the latest information on Yale Commercial Lock and Hardware products, visit our website at www.yalelocks.com.

Click on the "Literature" button to find:

- Catalogs
- Parts manuals
- Templates
- Specifications
- Installation instructions

Yale® customers can click on the ebusiness symbol on the website to register for an ebusiness account to:

- Check the status of orders
- Check availability of Warehouse and Quick-Ship items
- Track your order and confirm delivery
- Receive email notification of template changes

And More...

www.yalelocks.com

Yale Commercial Locks and Hardware

Address: 1902 Airport Road, Monroe, NC 28110 USA

Tel: 1-800-438-1951 • *Fax:* 1-800-338-0965 • www.yalelocks.com

Yale-Corbin Canada Ltd.

Address: 6940 Edwards Boulevard, Mississauga, Ontario, Canada L5T 2W2

Tel: 1-800-461-3007 • *Fax:* 1-800-461-8989 • www.yalecorbin.on.ca

Yale®, Yale Security Inc.®, SquareBolt®, PowerMatic® are registered trademarks of Yale Security Inc. SecureX™ is a trademark of Yale Security Inc. Folger Adam® is a registered trademark of Folger Adam Security Inc. Other product brand names may be trademarks or registered trademarks of their respective owners and are mentioned for reference purposes only. Copyright© 2002 Yale Security Inc. All rights reserved. These materials are protected under US copyright laws. All contents current at time of publication. Yale Security Inc. reserves the right to change availability of any item in this bulletin, its design, construction, and/or its materials.

The ASSA ABLOY Group is the world's leading manufacturer and supplier of locking solutions, dedicated to satisfying end-user needs for security, safety and convenience.

An ASSA ABLOY Group company

ASSA ABLOY

42111-MA-15.0-12/02R