Yale®

DOOR CLOSER

5100 SERIES

CATALOG

An ASSA ABLOY Group brand

ASSA ABLOY

APPLICATIONS

Yale® 5100 Series Door Closers are multi-feature closers whose compact design is ideal for application on interior doors. This narrow-stile closer has distinctive lines that harmonize with most decors. It is available with a full cover to provide an installation with compatible appearance to other door closers with covers. The *Yale* 5100 Series Door Closer offers an economical alternative for those installations where a more heavy-duty closer is not necessary.

STANDARD FEATURES

- Tri-Style® installation: closer tri-packed with brackets for regular arm, top jamb or parallel arm installation.
- Non-Handed
- Aluminum Alloy Shell
- Rack & Pinion Operation
- Adjustable Power
- Adjustable Closing Speed
- Adjustable Latch Speed
- Non-hold open standard. Hold open optional.

OPTIONAL FEATURES

- Adjustable Backcheck Cushioning: independent regulating valve; order 5100BC Series.
- Full Molded Cover: order 5100P Series.

U.L. LISTING

Yale 5100 Series Door Closers with non-hold open arms are listed by Underwriters' Laboratories, Inc. for use on labeled fire doors.

ANSI/FEDERAL SPECS

Yale 5100 Series Door Closers have been designed and manufactured to meet or exceed the requirements of FF-H-121-D and ANSI A156.4 Grade 2 Specifications.

SUGGESTED SPECIFICATIONS

Closers for interior doors shall be full rack-and-pinion type with cast aluminum alloy shell. Closer shall be non-handed to permit installation on either hand of door. Closer to be supplied with brackets to allow regular arm, parallel arm or top jamb mounting. Closer to have non-critical valves to independently regulate sweep speed (and) latch speed (and backcheck cushioning.) The forearm bracket shall permit a 15% power adjustment by rotating the forearm and bracket 180° at the door or frame. (Closer shall be enclosed in a molded full cover.) Closer to be *Yale* 5100/5100BC Series, 5100P/5100PBC Series.

CONTENTS

Introduction 2
Features 2
Finishes 2
Suggested Specifications 2
Accessories/Sizing Chart 3
Regular Arm Installation 4
Top Jamb Installation 5
Parallel Arm Installation 6
How To Order 7

FINISHES

BHMA Code	Old Yale® Designation	Description
689	SB	Aluminum
691	BL	Dull Bronze
693	315	Black
696	GB	Gold
690	STAT	Dark Statuary Bronze
694	312	Medium Amber
600	SRI	Special Rust Inhibitor (Prime-Beige)

Specify BHMA code when ordering.

ACCESSORIES AND SIZING CHART

DROP PLATES

For narrow top rails, narrow frame faces, and top jamb hold open installations. Plates vary in size when the closer is ordered with or without a full Molded Cover. Order Drop Plates from the chart. Specify finish when ordered separately.

	Drop Plate List No.	
Type of Installation	**Closer Without Cover**	**Closer With Cover**
Regular Arm	5146	5156
Top Jamb	5146	5157
Parallel Arm	5148	5158

For drop plate requirements see Dimensional Information pages 4-6.

MOLDED FULL COVER

Molded of high-impact U.L. Listed material for completely enclosing the closer body, mounting screws and the unused pinion shaft. This cover is non-handed. It has two notches; one for clearance of the pinion shaft. An insert is included for insertion into the unused notch. Four molded catches engage the closer body for easy yet secure installation. To order this cover separately, specify List Number 5100P x Finish.

DOOR SIZING CHART

Closer List Number		Interior Doors Maximum Size Wood or Metal		
		Type of Installation		
Non-Hold Open	**Hold Open**	**Regular Arm**	**Parallel Arm**	**Top Jamb**
5101(BC)	5111(BC)	The 5101 closer (size 1) is intended for use on doors with a minimum clear opening width of 2'8" (81cm) to provide less than 5.0 lbs. (22.2N) of door opening resistance.		
5102(BC)	5112(BC)	30" (76cm)	30" (76cm)	30" (76cm)
5103(BC)	5113(BC)	36" (91cm)	32" (81cm)	36" (91cm)
5104(BC)	5114(BC)	42" (107cm)	36" (91cm)	42" (107cm)

REGULAR ARM INSTALLATION

Closer mounts on door;
Arm bracket on frame face.

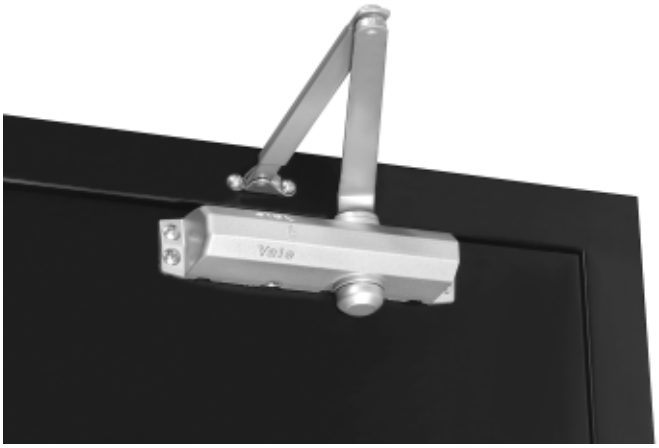

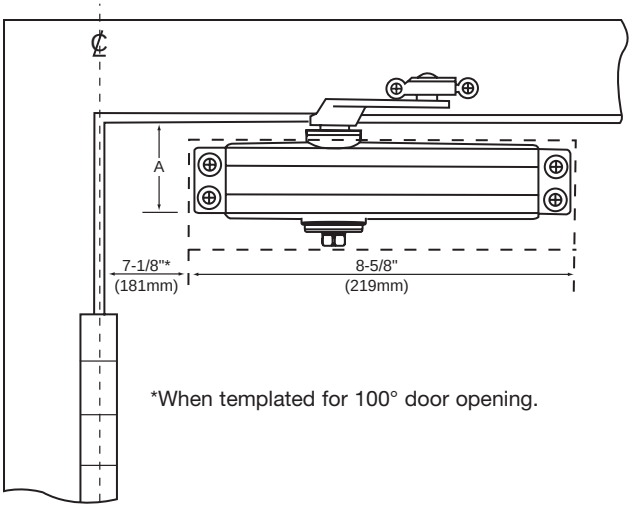

*When templated for 100° door opening.

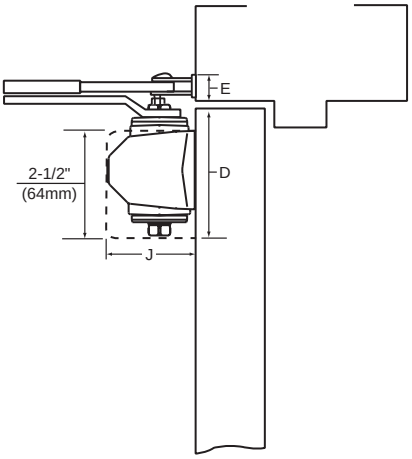

DIMENSIONAL INFORMATION

A Minimum Top Rail				D Minimum Top Rail Clearance		E Minimum Ceiling Clearance Without Drop Plate		J Closer Projection	
Without Drop Plate		With 5146/5156 Drop Plate							
Non-Hold Open	Hold Open	Non-Hold Open	Hold Open	Non-Hold Open	Hold Open	Non-Hold Open	Hold Open	Without Cover	With Cover
2-1/4" (57mm)	2-1/8" (54mm)	1-1/4" (32mm)		3" (76mm)	2-7/8" (73mm)	1" (25mm)	1-3/8" (35mm)	1-15/16" (49mm)	2-1/16" (52mm)

TOP JAMB INSTALLATION

Closer mounts on frame face;
Arm bracket on door top rail.

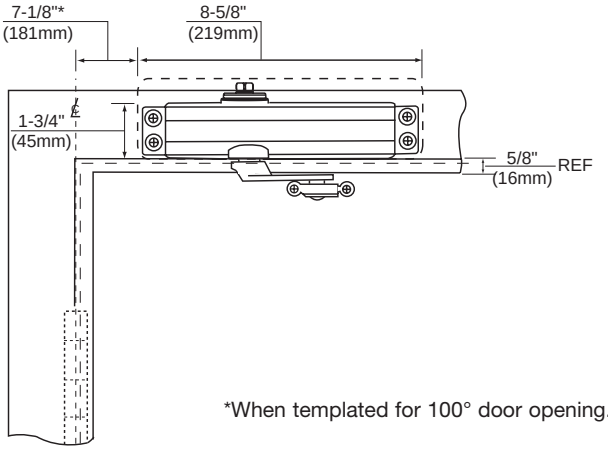

*When templated for 100° door opening.

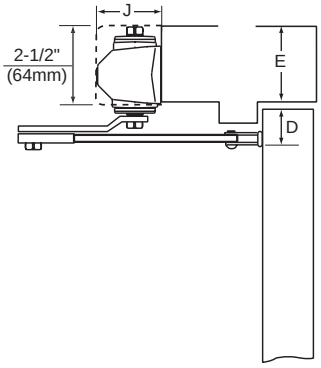

DIMENSIONAL INFORMATION

D Minimum Top Rail 5/8" (16mm) Frame Stop			E Minimum Ceiling Clearance				J Closer Projection	
Without Drop Plate	With 5146/5157 Drop Plate		Without Drop Plate		With 5146/5157 Drop Plate			
Non-Hold Open	Non-Hold Open	Hold Open	Non-Hold Open	Non-Hold Open	Non-Hold Open	Non-Hold Open	Without Cover	With Cover
1-1/4" (32mm)	2-1/4" (57mm)	2-5/8" (67mm)	2-1/2" (64mm)	N/A**	1-3/4" (44mm)		1-15/16" (49mm)	2-1/16" (52mm)

REVEAL INFORMATION

** The standard 5100 Series non-hold open closers and 5110 Series hold open closers (Top Jamb mount) accommodate frame reveals for 0" to 4-7/8" (0 to 124mm).

TJ5100 Series non-hold open closers and TJ5110 Series hold open closers accommodate frame reveals from 4-7/8" to 6-7/8" (124 to 175mm). These closers are not supplied with "Tri-Style® installation" hardware.

PARALLEL ARM INSTALLATION

Closer mounts on door;
Bracket on frame soffit.

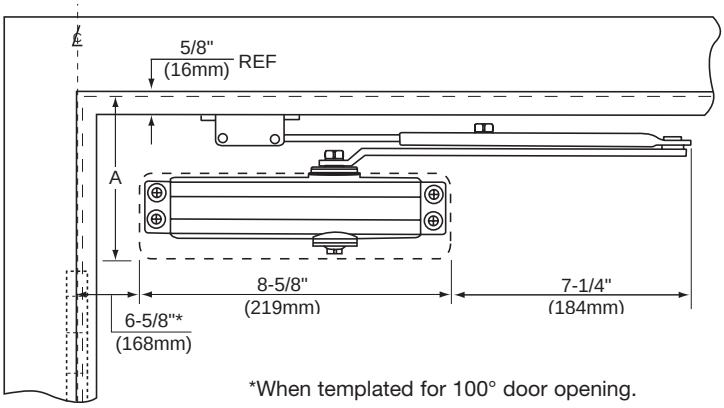

*When templated for 100° door opening.

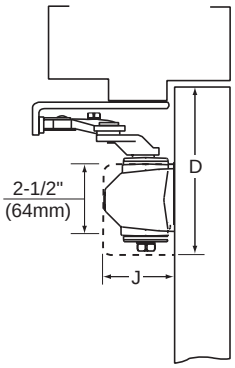

DIMENSIONAL INFORMATION

A Minimum Top Rail 5/8" (16mm) Frame Stop				D Minimum Top Rail Clearance		J Closer Projection	
Without Drop Plate		With 5148/5158 Drop Plate					
Non-Hold Open	Hold Open	Non-Hold Open	Hold Open	Non-Hold Open	Hold Open	Without Cover	With Cover
4" (102mm)	4-1/4" (108mm)	2-1/4" (57mm)		4-3/4" (121mm)	5" (127mm)	1-15/16" (49mm)	2-1/16" (52mm)

HOW TO ORDER

ORDERING INFORMATION

From this outline select the List Number for the Yale® 5100 Series Door Closer you require.

TJ	51	1	2	P	x Finish
Application Prefix: **None** - Closer installs regular arm, parallel arm or top jamb 0" to 4-7/8" (0 to 24mm) reveals. **TJ** - Top jamb closer 4-7/8" to 6-7/8" (124 to 175mm) reveals.	Orders the Basic 5100 Series Closer	**Function Digit:** **"0"** - Standard non-hold open arm. **"1"** - Hold open arm	**Size Digit:** This digit specifies closer size. See page 3 for sizing chart.	**Suffixes:** **"BC"** - Backcheck cushioning **"P"** - Molded full cover	See page 2

PACKING

Yale 5100 Series Door Closers are packed for Tri-Style® Installation one to a box and include the closer, appropriate arm for Regular Arm or Top Jamb mounting, soffit bracket for Parallel Arm mounting, cap for the pinion, hex key for valve adjustment, installation instructions and both wood screws and machine screws for mounting. When a Full Molded Cover is ordered, it will be included in the box with the closer.

Tri-Style® Installation closers, installed Top Jamb, will accommodate reveals to 4-7/8" (124mm). "TJ" prefixed closer for reveals from 4-7/8" to 6-7/8" (124 to 175mm) will be packaged with the standard top jamb bracket only.

Through-bolts, grommet nuts and sex nuts are available to special order.

online literature and templates

For the latest information on Yale Commercial Lock and Hardware products, visit our website at www.yalelocks.com.

Click on the "Literature" button to find:

- Catalogs
- Parts manuals
- Templates
- Specifications
- Installation instructions

Yale® customers can click on the ebusiness symbol on the website to register for an ebusiness account to:

- Check the status of orders
- Check availability of Warehouse and Quick-Ship items
- Track your order and confirm delivery
- Receive email notification of template changes

And More...

www.yalelocks.com

Yale Commercial Locks and Hardware

Address: 1902 Airport Road, Monroe, NC 28110 USA

Tel: 1-800-438-1951 • *Fax:* 1-800-338-0965 • www.yalelocks.com

Yale-Corbin Canada Ltd.

Address: 6940 Edwards Boulevard, Mississauga, Ontario, Canada L5T 2W2

Tel: 1-800-461-3007 • *Fax:* 1-800-461-8989 • www.yalecorbin.on.ca

ASSA ABLOY NA International

www.aanai.com

Yale®, Yale Security Inc.®, and Tri-Style® are registered trademarks of Yale Security Inc. Other product brand names may be trademarks or registered trademarks of their respective owners and are mentioned for reference purposes only. Copyright© 2003 Yale Security Inc. All rights reserved. These materials are protected under US copyright laws. All contents current at time of publication. Yale Security Inc. reserves the right to change availability of any item in this bulletin, its design, construction, and/or its materials.

The ASSA ABLOY Group is the world's leading manufacturer and supplier of locking solutions, dedicated to satisfying end-user needs for security, safety and convenience.

An ASSA ABLOY Group brand

ASSA ABLOY

42102-MA-15.0-11/03R