Yale®

MORTISE LOCKS

8800 SERIES

CATALOG

An ASSA ABLOY Group brand

ASSA ABLOY

NEVER COMPROMISE

The value of any product is equal to the quality of the labor and materials put into making it. And Yale's new 8800 Series mortise lock is a perfect example that true quality doesn't just happen. Meticulous design and engineering have gone into manufacturing a mortise lock that brings you versatility as well as uncompromising strength and durability.

With quick lever handing and a patent pending quick reversible latchbolt, lockset handing takes only seconds. Add a standard non-handed curved lip strike, and you've got a no-hassle mortise lock that's quick and easy to install.

When it comes to strength, the Yale® 8800 Series brings a new measure of security to the door. Its 1" throw stainless steel deadbolt extends further back into the reinforced steel case when in the locked position, providing added stability and resistance to abuse. Solid trim packages also provide deterrence to vandalism, making the 8800 Series a prime player in your total opening security package.

Need an outside trim finish that's as durable as the lock itself? PVD lifetime finish is available on bright brass, satin brass and even oxidized satin bronze.

For over 160 years, Yale Commercial Locks and Hardware has built a reputation on manufacturing products that exceed expectations of quality and reliability. The *Yale* 8800 Series mortise lock is no exception, and to demonstrate that quality proves itself, we back it with a 7-year mechanical warranty.

We won't compromise, and neither should you.

CONTENTS

Introduction 2
Finishes 2
Lockset Features 3
SL8800 4
Facts and Figures 5
Lever Trim Installation 5
Lever Trim 6-8
Lever Trim Conversion 9
Knob Trim 10-12
Lockset Functions 13-17
Cylinders 18
Strikes 19
Miscellaneous Trim Design 20
How To Order 21

8800

The *Yale* 8800 Series Mortise Lock is an industry standard product. Suitable for installation on doors 1-3/4" to 3-1/4" thick, these products have a 1" throw stainless steel deadbolt with two enclosed hardened steel roller armor pins. The latchbolt is 3/4" throw with stainless steel two-piece anti-friction camming action.

SL8800

The SL8800 features extra heavy-duty lever escutcheon trim and is designed for institutional use including minimum security prisons. The internal components of the lock body have been modified to resist forced entry.

FINISHES

The *Yale* 8800 Series Mortise Lock is available in the trim finishes as listed. All knobs, lever handles, roses, escutcheons, cylinder rings and other exposed parts are fabricated of either brass, bronze, or stainless steel and will be compatible with the finish ordered. When ordering, specify the finish required by the ANSI Code Number only. When locksets are ordered with different trim finishes on each side, specify the outside finish first, i.e. COR8817-2 x 612 x 625. The front and strike finish will match the inside finish unless specified otherwise.

PVD LIFETIME FINISH

Physical Vapor Deposition (PVD) is a technologically advanced finish coating that provides the ultimate surface protection against environmental elements and everyday wear and tear. PVD matches clear coated finishes in appearance, yet surpasses them in durability. Yale® warrants all its PVD finishes against corrosion, tarnish, wear, discoloring and peeling for the lifetime of the part to which it has been applied. Ask your sales representative for specific warranty information.

ANSI Code	Finish Description
605	Bright Brass, Clear Coated
605e*	Bright Brass, PVD
606	Satin Brass, Clear Coated
606e*	Satin Brass, PVD
609	Satin Brass, Blackened, Satin Relieved, Clear Coated
611	Bright Bronze, Clear Coated
612	Satin Bronze, Clear Coated
613	Satin Bronze, Oxidized and Oil Rubbed
613e*	Satin Bronze, Oxidized, PVD
616	Satin Bronze, Blackened and Satin Relieved, Clear Coated
619	Satin Nickel Plated, Clear Coated
625	Bright Chrome Plated
626	Satin Chrome Plated
629	Bright Stainless Steel
630	Satin Stainless Steel

* PVD Lifetime finish

LOCKSET FEATURES

WARRANTY

Yale 8800 series mechanical mortise locks carry a 7-year warranty.

LEAD SHIELDING

All *Yale* 8800 Series Mortise Locks are available with a lead shield for installation in lead-lined doors.

BEVEL FRONT

Yale 8800 Series fronts are free-floating to adjust from flat to the standard bevel of 1/8" in 2".

DOOR THICKNESS

8800 Series Mortise Locks are to be supplied as standard for 1-3/4" - 3-1/4" thick doors. For other than standard, specify the door thickness on the order: (i.e. 1-1/2", 2", 2-1/4", etc.)

FEDERAL SPECIFICATIONS

Yale 8800 Series Mortise Locks conform to Federal Specifications FF-H-106C/GEN and FF-H-106/2.

QUICK REVERSIBILITY

Yale mortise locks with the same trim on both sides (knob x knob or lever x lever) are field reversible. These locks can be converted to accommodate the hand of the door. However, to reduce installation costs, it is recommended that the hand of the door be specified for each lockset ordered. If the hand of the door is not specified, RH will be furnished.

AMERICAN NATIONAL STANDARD INSTITUTE (ANSI)

ANSI A115 Specifications for Door and Frame Preparation
8800 Series Mortise Locks conform to ANSI Specifications A115.1 and ANSI A115.11, which cover hollow metal door and frame preparation for mortise locks.

ANSI 156.13 Standards for Mortise Locks and Latches
Yale® 8800 Series Mortise Locks conform to ANSI Series 1000 mortise lock functions (F01, F04, etc.) Operational and Security Grade 1.

KNURLED KNOB DESIGNS

Where required by the local authority, knob trim can be knurled to be identifiable to the touch for blind persons. All knob designs except CA may be ordered knurled; all lever designs except CR bronze 611, 612, 613, and PN may be ordered knurled.

Only the outside knob or lever will be knurled or abrasive coated unless specified otherwise. To order a complete lockset knurled or abrasive coated, suffix the Lockset Model Number with "Knurled" or "Abrasive Coated," i.e. LF8807 x "Knurled," LF8817-2 x "Knurled Inside Only," FNE 8828FL x "Knurled Inside Only."

UNDERWRITERS LABORATORIES (U.L.)

Yale 8800 Series Mortise Locks have been listed by Underwriters Laboratories Inc. for use on fire doors having a rating up to and including 3 hours. This pertains to single swing doors not exceeding 4 feet in width and 8 feet in height and in doors mounted in pairs not exceeding 8 feet in either direction (unless otherwise noted in the individual listings.)

In general, single-point mortise locks or latches with 3/4" minimum latch throw are intended for the active leaf of doors mounted in pairs, with the inactive leaf provided with top and bottom flush or surface bolts of the manual, automatic, or self-latching type. The door Classification Marking specifies the minimum latch throw required for the individual door.

Yale 8800 Series Mortise Locks with 3/4" throw latchbolts may also be used on single swing doors rated 1-1/2 hours or less, up to 4 feet in width and 9 feet in height. This is in addition to the rating mentioned above. All *Yale* 8800 Series Mortise Locks with Lever Handle Trim are UL listed for fire door applications. Underwriters Laboratories does not list locks with rabbeted fronts, locks with deadbolt only, or locks with hold-back feature on the latchbolt.

ISO 9001

Designed and manufactured in a certified ISO 9001 facility.

SL8800

Specifications for all levers below:

SL Escutcheon:	8" x 2-1/2"
Cylinder Ring:	Standard, No. 1765
Material:	Stainless steel escutcheon; Brass lever (plated to match stainless steel)

AUGUSTA - AUSL

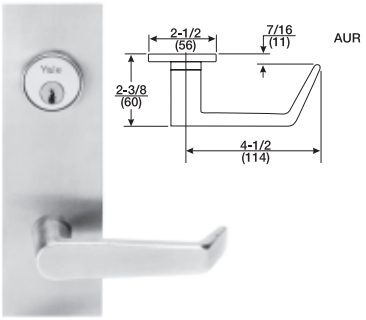

JEFFERSON - JNSL

PACIFIC BEACH - PBSL

MONROE - MOSL

CARMEL - CRSL

ARCADIA - ARSL

- The SL8800 Series Mortise Lock features heavy-duty lever escutcheon trim and is designed primarily for applications in schools and other institutions where excessive abuse and vandalism may occur. It is also recommended for use in minimum security prisons and office buildings or apartment buildings located in "high crime" areas.
- Yale® SL8800 Series lever escutcheon trims feature through-bolted installation with security head screws.
- Outside trim is held in place by threaded posts. Posts fit through holes in the door, above and below the lock case, and are secured by through-bolts from the inside trim.
- Heat-treated spindle resists breaking up to 1,200 inch pounds of force.
- Levers are attached to the escutcheon for added security.
- *Yale* outside escutcheon trims have no visible screws – a great deterrent to vandalism.
- At 2-1/2" wide and 3/16" thick, escutcheon is wider and more than twice as thick as standard escutcheons.
- Each mortise lock ordered with lever trim features an internal heavy-duty spring cartridge which prevents lever sag.
- All *Yale* mortise lock trims are UL listed for fire door applications.
- SL8800's are offered with Augusta, Jefferson, Pacific Beach, Monroe, Carmel and Arcadia lever handle escutcheon trims.
- SL8800 Series Mortise Locks are available in all lock functions. (See pages 13-17.)

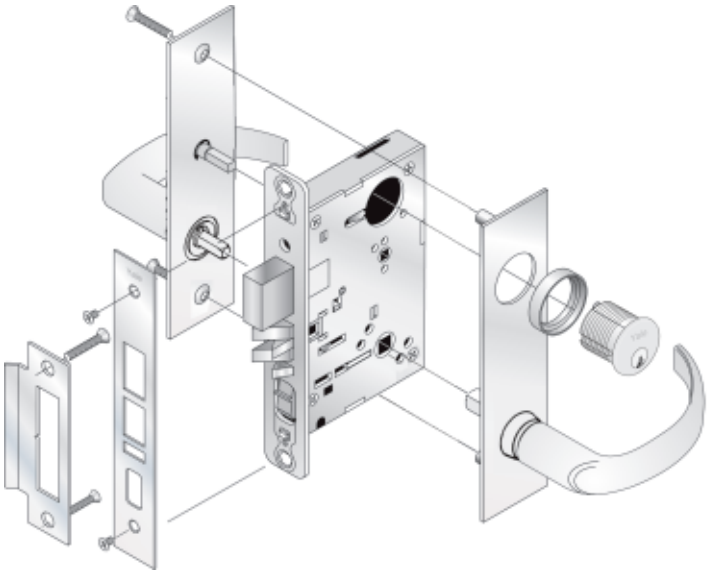

FACTS AND FIGURES

8800/SL8800 SERIES

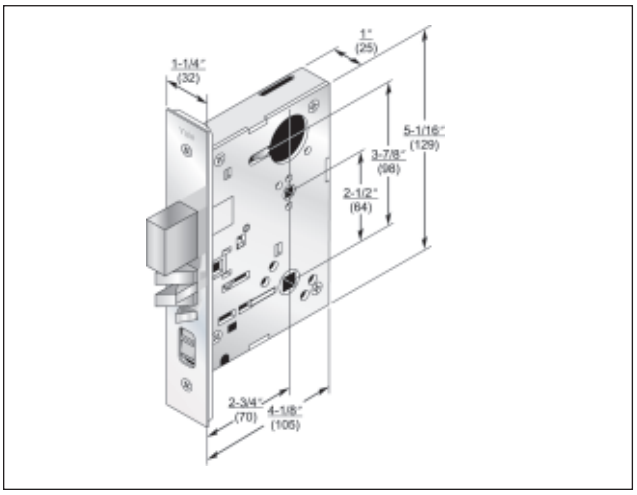

ANSI Conformance - ANSI A156.13, Series 1000, Operational Grade 1. (SL8800 meets Security Grade 1.)

Armor Front - 8" x 1-1/4"

Door Thickness - 1-3/4" standard, to 3-1/4" thick doors to order.

Deadbolt - 1" throw, stainless steel with two enclosed hardened-steel roller armor pins.

Latchbolt - 3/4" throw, stainless steel two-piece anti-friction camming action.

UL Listed - for application on labeled fire doors.

Backset - 2-3/4" only.

Case - wrought steel, zinc dichromated.

Hubs - Solid steel, fine-blanked and heat treated for additional strength.
Knobs: 5/16" standard, 3/8" to order.
Levers: 3/8" standard.
(SL8800 - available in levers only.)

SECTIONAL LEVER INSTALLATION

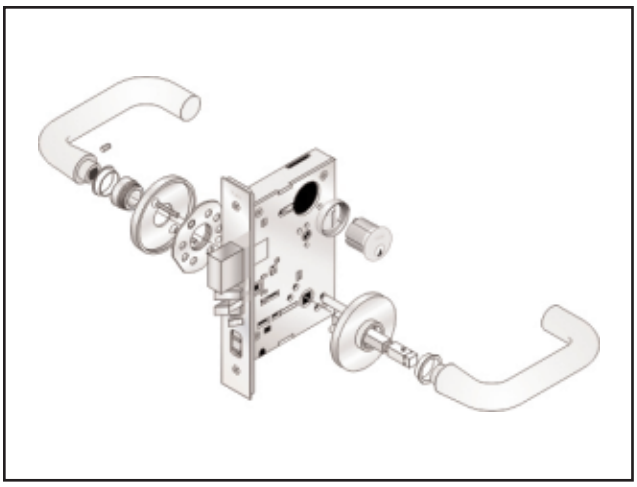

- All Yale® 8800 Series sectional lever trims feature through-bolted installation. This ensures positive alignment of the trim with the lock case and offers an attractive appearance.
- Outside trim is held in place by threaded posts. The posts fit through holes in the lock case and are secured by through-bolts from the inside trim.
- Since self-aligning trim is easy to install, on-the-job labor costs may be reduced.
- Each mortise lock ordered with lever trim features an internal heavy-duty spring cartridge which prevents lever sag.
- All *Yale* mortise lock trims are UL listed for fire door applications.
- A variety of sectional lever designs are available as shown on pages 6-8.

ESCUTCHEON LEVER INSTALLATION

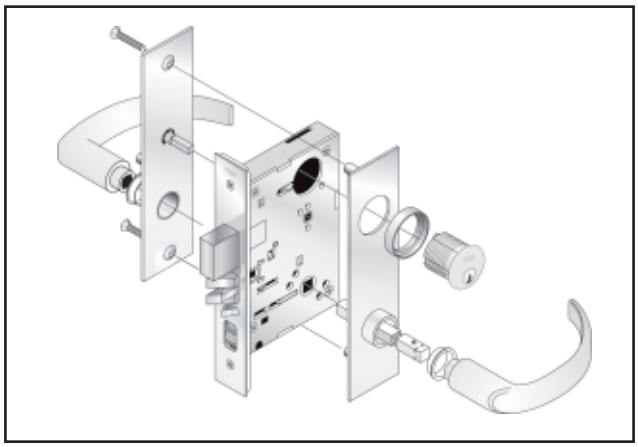

- All *Yale* 8800 Series escutcheon lever trims feature through-bolted installation.
- Outside trim is held in place by threaded posts. The posts fit through the door and are secured by through-bolts from the inside trim.
- *Yale* outside escutcheon trims have no visible screws – a great deterrent to vandalism.
- Each mortise lock ordered with lever trim features an internal heavy-duty spring cartridge which prevents lever sag.
- All *Yale* mortise lock trims are UL listed for fire door applications.
- A variety of escutcheon lever designs are available as shown on pages 6-8.

LEVER TRIM

ARCADIA - ARR

AR Lever Handle: Solid Cast
***CO Rose:** Cold forged, reinforced
Cylinder Ring: Standard, No. 1765
Material: Brass, Bronze, Stainless Steel

*Optional rose: See page 8 for description and material.

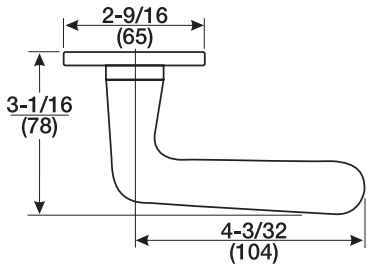

AUGUSTA - AUR

AU Lever Handle: Solid Cast
***CO Rose:** Cold forged, reinforced
Cylinder Ring: Standard, No. 1765
Material: Brass, Bronze, Stainless Steel

*Optional rose: See page 8 for description and material.

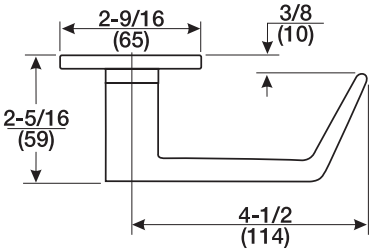

CARMEL - CRR

CR Lever Handle: Brass (solid cast), Bronze (wrought). Stainless Steel (solid cast).
***CO Rose:** Cold forged, reinforced
Cylinder Ring: Standard, No. 1765
Material: Brass, Bronze, Stainless Steel

*Optional rose: See page 8 for description and material.

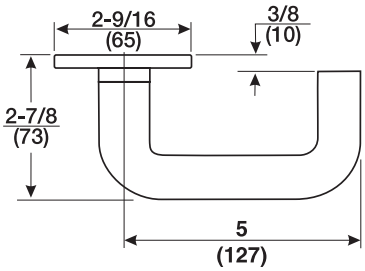

ARCADIA - ARE

AR Lever Handle: Solid Cast
***CO Escutcheon:** Heavy cold forged
Cylinder Ring: Standard, No. 1765
Material: Brass, Bronze, Stainless Steel

*Optional escutcheon: LN. See page 8 for description and material.

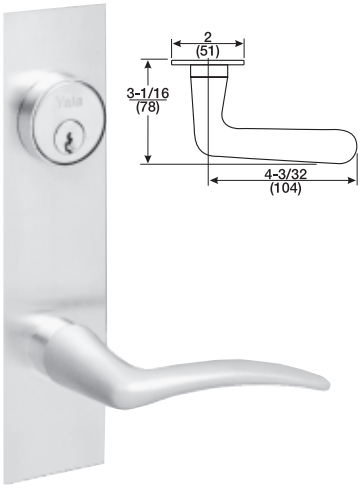

AUGUSTA - AUE

AU Lever Handle: Solid Cast
***CO Escutcheon:** Heavy cold forged
Cylinder Ring: Standard, No. 1765
Material: Brass, Bronze, Stainless Steel

*Optional escutcheon: LN. See page 8 for description and material.

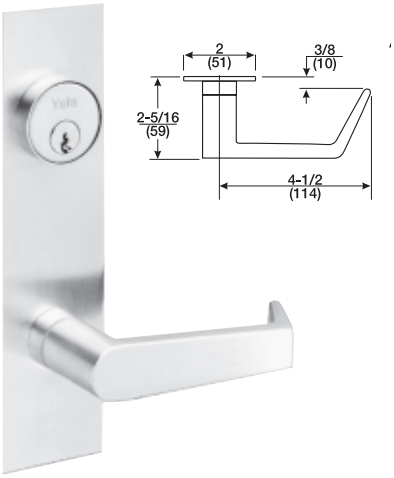

CARMEL - CRE

CR Lever Handle: Brass (solid cast), Bronze (wrought), Stainless Steel (solid cast).
***CO Escutcheon:** Heavy cold forged
Cylinder Ring: Standard, No. 1765
Material: Brass, Bronze, Stainless Steel

*Optional escutcheon: LN. See page 8 for description and material.

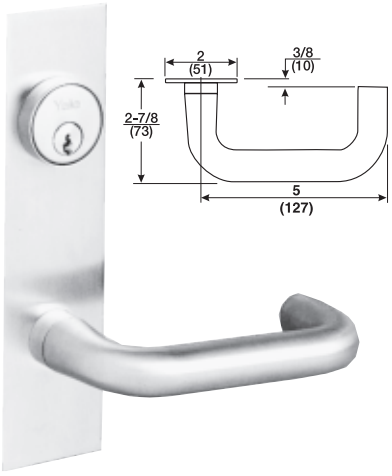

LEVER TRIM

JEFFERSON - JNR

JN Lever Handle:	Solid Cast
***CO Rose:**	Cold forged, reinforced
Cylinder Ring:	Standard, No. 1765
Material:	Brass, Bronze, Stainless Steel

*Optional rose: See page 8 for description and material.

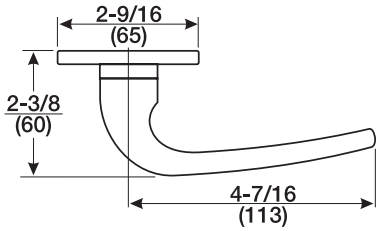

MONROE - MOR

MO Lever Handle:	Solid Cast
***CO Rose:**	Cold forged, reinforced
Cylinder Ring:	Standard, No. 1765
Material:	Brass, Bronze, Stainless Steel

*Optional rose: See page 8 for description and material.

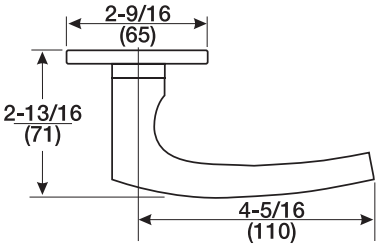

PACIFIC BEACH - PBR

PB Lever Handle:	Solid Cast
***CO Rose:**	Cold forged, reinforced
Cylinder Ring:	Standard, No. 1765
Material:	Brass, Bronze, Stainless Steel

*Optional rose: See page 8 for description and material.

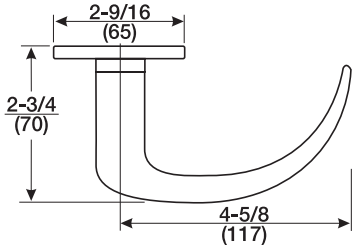

JEFFERSON - JNE

JN Lever Handle:	Solid Cast
***CO Escutcheon:**	Heavy cold forged
Cylinder Ring:	Standard, No. 1765
Material:	Brass, Bronze, Stainless Steel

*Optional escutcheon: LN. See page 8 for description and material.

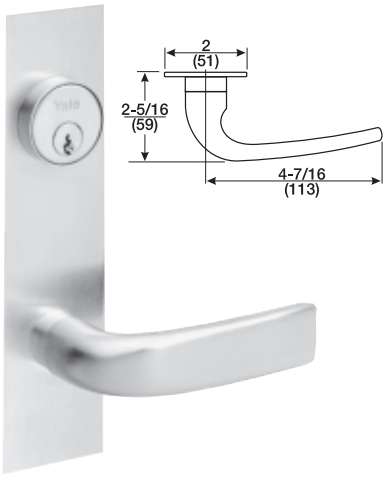

MONROE - MOE

MO Lever Handle:	Solid Cast
***CO Escutcheon:**	Heavy cold forged
Cylinder Ring:	Standard, No. 1765
Material:	Brass, Bronze, Stainless Steel

*Optional escutcheon: LN. See page 8 for description and material.

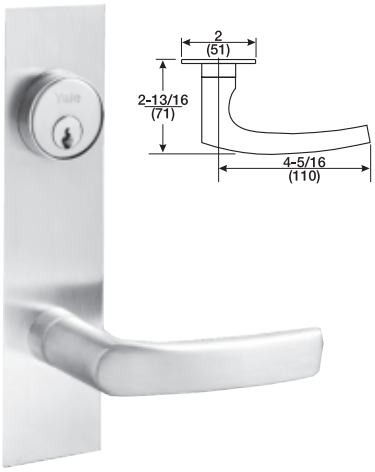

PACIFIC BEACH - PBE

PB Lever Handle:	Solid Cast
***CO Escutcheon:**	Heavy cold forged
Cylinder Ring:	Standard, No. 1765
Material:	Brass, Bronze, Stainless Steel

*Optional escutcheon: LN. See page 8 for description and material.

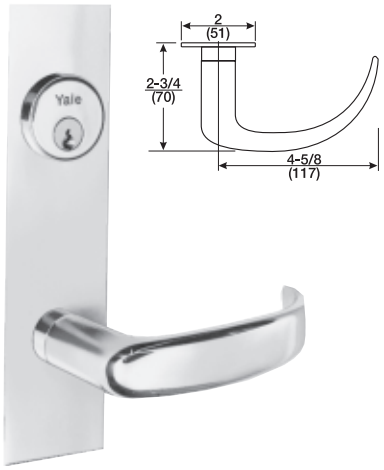

LEVER TRIM

PINEHURST - PNR

PN Lever Handle: Wrought
***CO Rose:** Cold forged, reinforced
Cylinder Ring: Standard, No. 1765
Material: Brass, Bronze, Stainless Steel

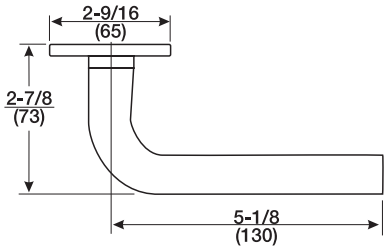

VIRGINIA - VIR

VI Lever Handle: Solid Cast
***CO Rose:** Cold forged, reinforced
Cylinder Ring: Standard, No. 1765
Material: Brass, Bronze, Stainless Steel

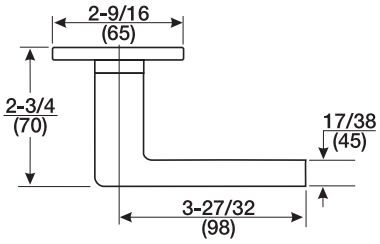

MAYFAIR - MF ROSE OPT.

Cold forged, reinforced
Material: Brass, Bronze, Stainless Steel

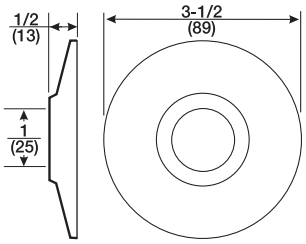

PINEHURST - PNE

PN Lever Handle: Wrought
***CO Escutcheon:** Heavy cold forged
Cylinder Ring: Standard, No. 1765
Material: Brass, Bronze, Stainless Steel

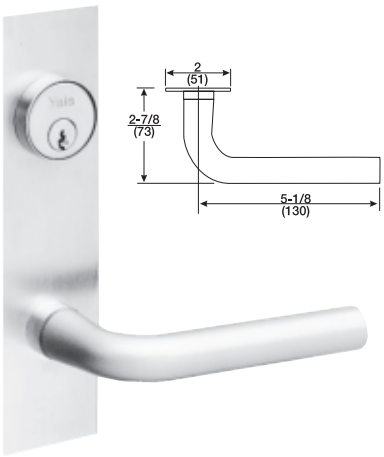

VIRGINIA - VIE

VI Lever Handle: Solid Cast
***CO Escutcheon:** Heavy cold forged
Cylinder Ring: Standard, No. 1765
Material: Brass, Bronze, Stainless Steel

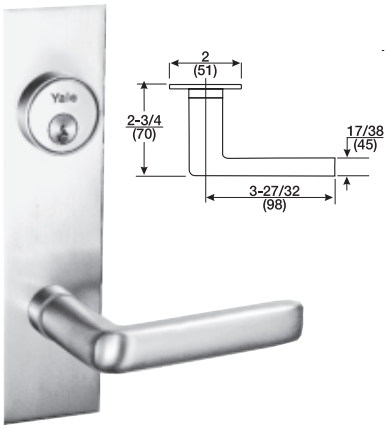

LENOIR - LN ESCUTCHEON OPT.

LN Escutcheon: Heavy cold forged
Cylinder Ring: None required for standard 1" cylinder – all others 1765
Material: Brass, Bronze, Stainless Steel

CR x LN Shown.

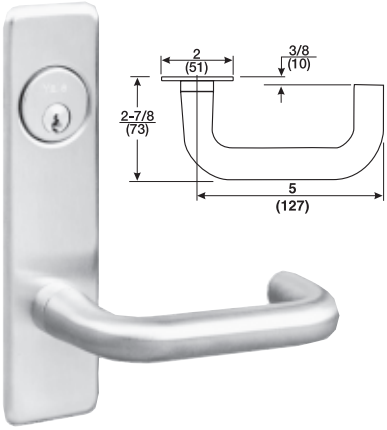

TRIM CONVERSION

88FL CONVERSION KIT

88FL Retrofit Kit Converts Yale® Mortise Locks to Meet A.D.A. Quickly, Easily.
The *Yale* 88FL Mortise Lock Retrofit Kit contains all internal components necessary to convert *Yale* 8800 Series steel case mechanical and electrified mortise locks from knob trim to lever trim.

The kit provides an easy and inexpensive method of conversion to meet requirements of the Americans with Disabilities Act (A.D.A.) without replacing the entire lock.

The kit may be used with any of Yale's extensive line of attractive and functional lever handle sets. Existing roses or escutcheon plates need not be replaced. Complete illustrated instructions are included with the kit.

To use existing rose trim, the inside rose adapter must be replaced. (PN 10-0501-2003 x finish).

The 88FL kit is UL approved and locks converted according to the instructions will maintain UL listing.

SPRING CARTRIDGE ASSEMBLY

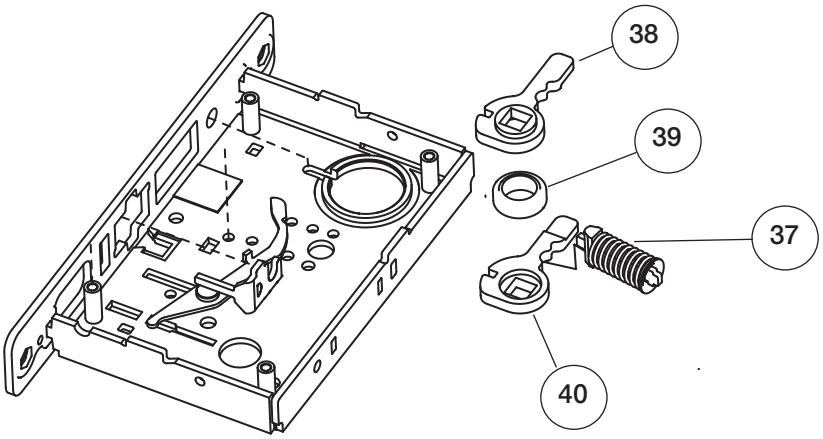

PARTS LIST

S82-2004 Spring Cartridge Assembly		
Item No.	**Part No.**	**Description**
37	50-8899-0034	Spring Cartridge Assembly
38	50-8800-1005	Cap Hub
39	50-8800-1011	Spacer, Hub
40	50-8800-1004	Case Hub

Note: See 8800 Parts/Service Manual for complete list of internal parts.

SPINDLE APPLICATIONS - 1178L SWIVEL SPINDLES

8800 Series (Mechanical and Electrified Locks)			Electrified Locks (Cardcode, Touchcode®, Guestcode)		
Door Thickness	**Spindle Length**	**Part No.**	**Door Thickness**	**Spindle Length**	**Part No.**
1-1/4" - 1-3/4" (32mm-44mm)	4.281	50-1178-0001	1-1/4" - 1-1/2" (32mm - 38mm)	5.280	55-1178-0001
2" - 2-1/2" (51mm - 64mm)	4.781	50-1178-0002	1-3/4" - 2-1/4" (44mm - 57mm)	6.029	55-1178-0002
2-3/4" - 3-1/4" (70mm - 83mm)	5.531	50-1178-0003	2-1/2" - 3-3/4" (64mm - 95mm)	6.779	55-1178-0003
			2-3/4" - 3" (70mm - 76mm)	7.529	55-1178-0004

The standard spindle furnished with the 88FL Kit is part no. 50-1178-0001. If a different spindle is required, specify part no. of spindle (i.e. CR88FL x 55-1178-0002 spindle).

KNOB TRIM INSTALLATION

SECTIONAL KNOB INSTALLATION

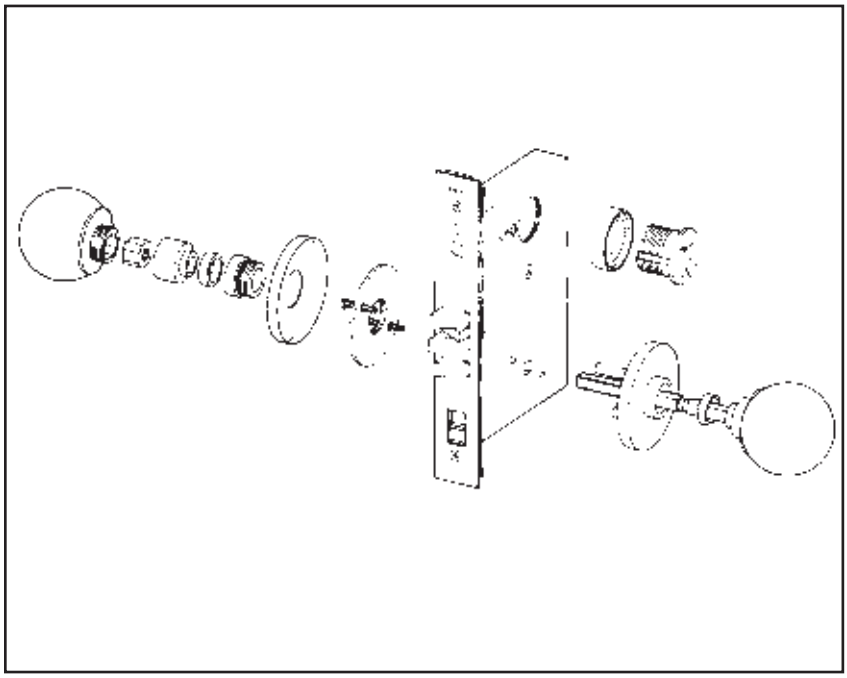

- All Yale® 8800 Series sectional knob trims feature through-bolted installation. This ensures positive alignment of the trim with the lock case and offers an attractive appearance.
- Outside trim is held in place by threaded posts. The posts fit through holes in the lock case and are secured by through-bolts from the inside trim.
- Since self-aligning trim is easy to install, on-the-job labor costs may be reduced.
- All *Yale* mortise lock trims are UL listed for fire door applications.
- A variety of sectional knob designs are available as shown on pages 11-12.

ESCUTCHEON KNOB INSTALLATION

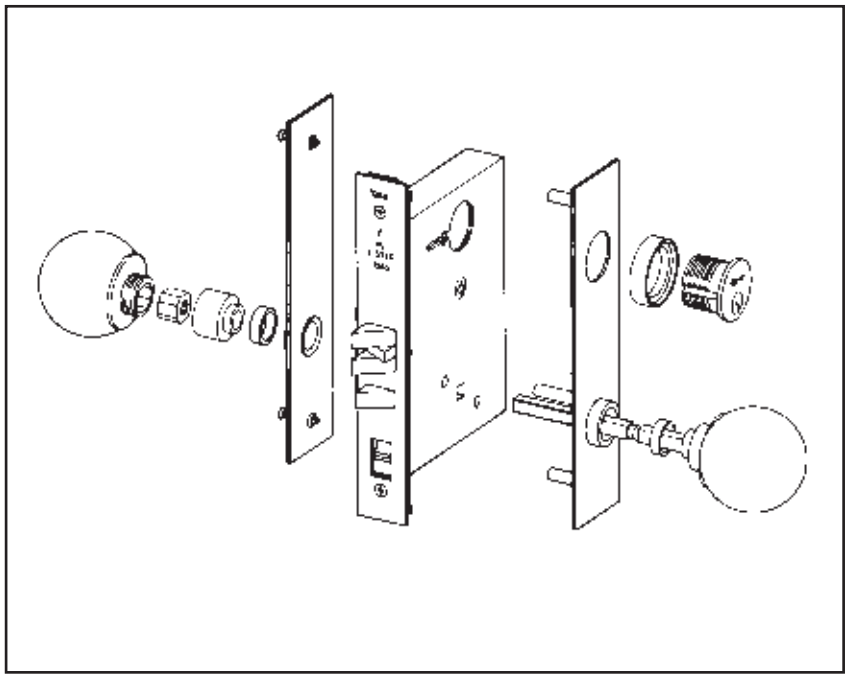

- All *Yale* 8800 Series escutcheon knob trims, with the exception of the Easton (CE) surface-mounted escutcheon trim, feature through-bolted installation.
- Outside trim is held in place by threaded posts. The posts fit through the door and are secured by through-bolts from the inside trim.
- *Yale* outside escutcheon trims have no visible screws – a great deterrent to vandalism – except the Easton trim which is used primarily as a replacement for similar trim.
- All *Yale* mortise lock trims are UL listed for fire door applications.
- A variety of escutcheon knob designs are available as shown on pages 11-12.

KNOB TRIM

BRANDYWINE - BRR

BR Knob:	Heavy cold forged
***CO Rose:**	Cold forged, reinforced
Cylinder Ring:	Standard, No. 1135
Material:	Brass, Bronze, Stainless Steel

*Optional rose: See page 8 for description and material.

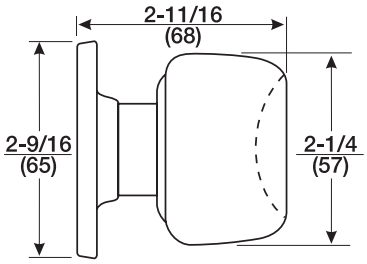

CAROLINA - CAR

CA Knob:	Cold forged
***CO Rose:**	Cold forged, reinforced
Cylinder Ring:	Standard, No. 1135
Material:	Brass, Bronze, Stainless Steel

*Optional rose: See page 8 for description and material.

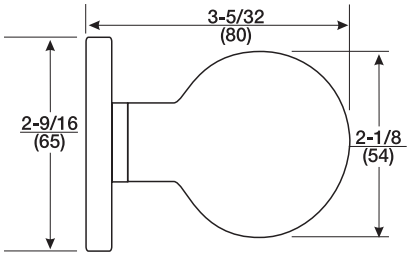

COPENHAGEN - COR

CO Knob:	Heavy cold forged, reinforced
***CO Rose:**	Cold forged, reinforced
Cylinder Ring:	Standard, No. 1765
Material:	Brass, Bronze, Stainless Steel

*Optional rose: See page 8 for description and material.

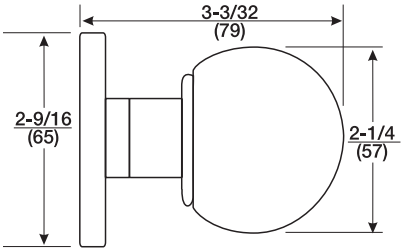

BRANDYWINE - BRE

BR Knob:	Heavy cold forged
***CO Escutcheon:**	Heavy cold forged
Cylinder Ring:	Standard, No. 1765
Material:	Brass, Bronze, Stainless Steel

*Optional escutcheon: LN. See page 12.

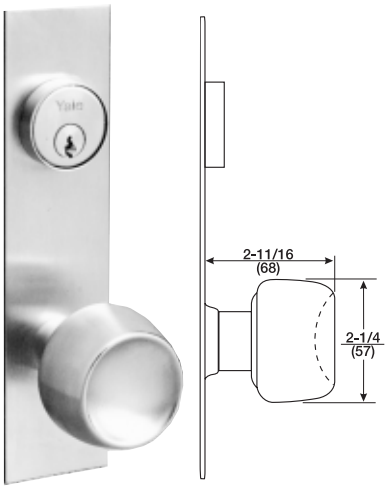

CAROLINA - CAE

CA Knob:	Cold forged
WG Escutcheon:	Heavy cold forged
Cylinder Ring:	Standard, No. 1134
Material:	Brass, Bronze, Stainless Steel

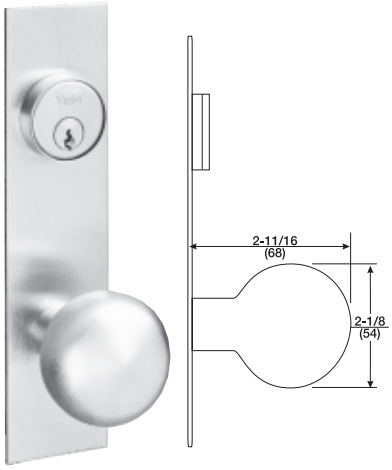

COPENHAGEN - COE

CO Knob:	Heavy cold forged, reinforced
***CO Escutcheon:**	Heavy cold forged
Cylinder Ring:	Standard, No. 1765
Material:	Brass, Bronze, Stainless Steel

*Optional escutcheon: LN. See page 12.

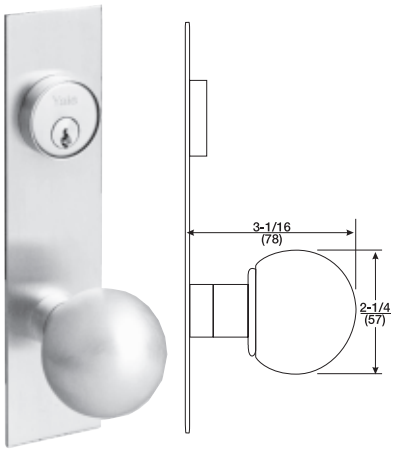

KNOB TRIM

LITCHFIELD - LFR

LF Knob: Heavy cold forged, reinforced
***CO Rose:** Cold forged, reinforced
Cylinder Ring: Standard, No. 1135
Material: Brass, Bronze, Stainless Steel

*Optional rose: See page 8 for description and material.

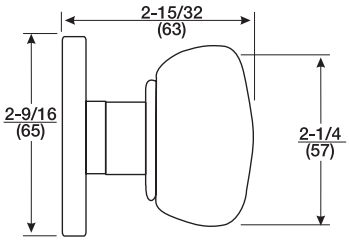

EASTON - CE

LF Knob: Heavy cold forged, reinforced
CE Escutcheon: Heavy cold forged. Also available with all lever designs.
Cylinder Ring: Standard, No. 1135
Material: Brass, Bronze, Stainless Steel

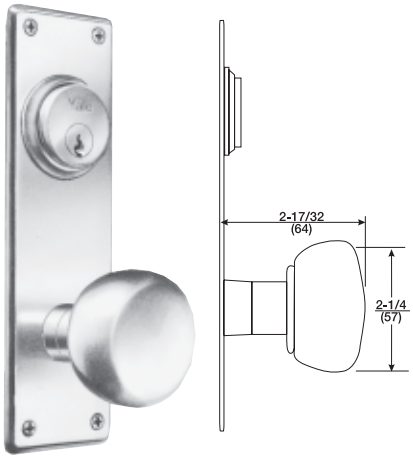

LITCHFIELD - LFE

LF Knob: Heavy cold forged, reinforced
***CO Escutcheon:** Heavy cold forged
Cylinder Ring: Standard, No. 1765
Material: Brass, Bronze, Stainless Steel

*Optional escutcheon: LN. See below right.

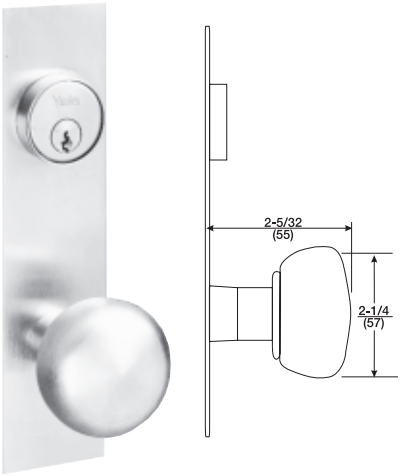

LENOIR - LN ESCUTCHEON

LN Escutcheon: Heavy cold forged
Cylinder Ring: None required for standard 1" cylinder – all others 1765
Material: Brass, Bronze, Stainless Steel

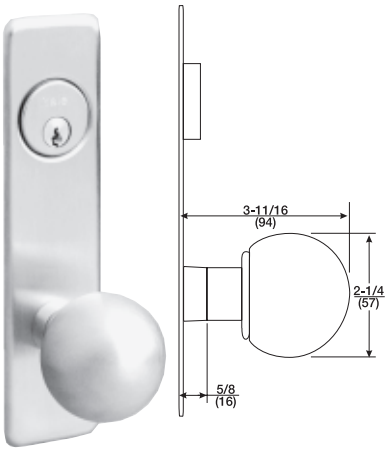

LOCKSET FUNCTIONS

PASSAGE LATCH (F01)

- For doors that do not require locking.
- Either knob/lever operates the latchbolt at all times.

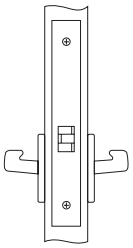

Spindles:
Knobs, 3/8" (10mm), N1170-1/2.
Levers, 3/8" (10mm), 1173L.

Model Numbers		Throw Latchbolt
Knobs	Levers	
8801	8801FL	3/4"
	SL8801FL	3/4"

PRIVACY LOCK (F19)

- Latchbolt by knob/lever either side.
- Deadbolt by thumbturn inside.
- When the deadbolt is projected, outside knob/lever is automatically made rigid.
- Anti-panic operation. Turning inside knob/lever retracts the latchbolt and deadbolt simultaneously, automatically unlocking outside knob/lever.
- In emergency, deadbolt may be unlocked from outside by E203 emergency key supplied.

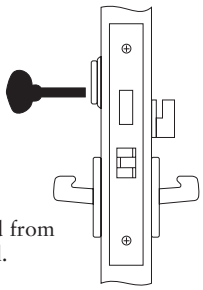

Spindles:
Knobs, 3/8" (10mm), 1175K.
Levers, 3/8" (10mm), 1178L.

Model Numbers		Throw	
Knobs	Levers	Latchbolt	Deadbolt
8802	8802FL	3/4"	1"
	SL8802FL	3/4"	1"

STOREROOM OR CLOSET LOCK (F07)

- For use on storeroom, utility, exit doors.
- Deadlocking latchbolt.
- Latchbolt by key outside, knob/lever inside.
- Outside knob/lever rigid at all times.

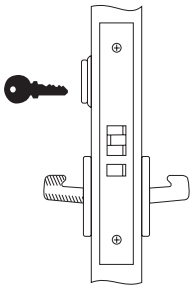

†Cylinder Code: A
Spindles:
Knobs, 3/8" (10mm), 1175K.
Levers, 3/8" (10mm), 1178L.

Model Numbers		Throw Latchbolt
Knobs	Levers	
8805	8805FL	3/4"
	SL8805FL	3/4"

ENTRANCE LOCK (F04)

- For office doors where locking is required.
- Deadlocking latchbolt.
- Latchbolt by knob/lever either side, except when outside knob/lever is set by stopwork activator.
- When outside knob/lever is set, latchbolt is operated by key outside and knob/lever inside.

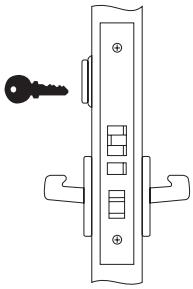

†Cylinder Code: A
Spindles:
Knobs, 3/8" (10mm), 1175K.
Levers, 3/8" (10mm), 1178L.

Model Numbers		Throw Latchbolt
Knobs	Levers	
8807	8807FL	3/4"
	SL8807FL	3/4"

CLASSROOM LOCK (F05)

- For classroom, office, or utility room doors.
- Deadlocking latchbolt.
- Latchbolt by knob/lever either side, except when outside knob/lever is set by key outside.
- Inside knob/lever always active.

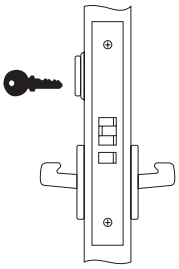

†Cylinder Code: A
Spindles:
Knobs, 3/8" (10mm), 1175K.
Levers, 3/8" (10mm), 1178L.

Model Numbers		Throw Latchbolt
Knobs	Levers	
8808	8808FL	3/4"
	SL8808FL	3/4"

CLASSROOM LOCK

- Guardbolt deadlocks latchbolt.
- Latchbolt retracted by either trim unless outside trim is locked by key.
- Either cylinder locks or unlocks outside trim.
- Latchbolt can be retracted by key when outside trim is locked.
- Operating inside trim retracts latchbolt, but outside trim remains locked.

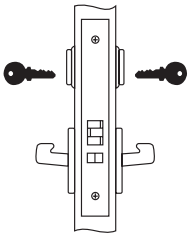

†Cylinder Code: B
Spindles:
Knobs, 3/8" (10mm), 1175K.
Levers, 3/8" (10mm), 1178L.

Model Numbers		Throw Latchbolt
Knobs	Levers	
8808-2	8808-2FL	3/4"
	SL8808-2FL	3/4"

†Cylinder Code defines the cylinder supplied as standard for each lock and the optional cylinder available. See Page 18.

LOCKSET FUNCTIONS

CLASSROOM DEADBOLT LOCK (F33)

- Latchbolt retracted by either trim unless outside trim is locked by key.
- Deadbolt operated by key on either side.
- When deadbolt is projected, outside trim is automatically locked.
- Key retraction of deadbolt unlocks outside trim.
- Anti-panic operation. Operating inside trim automatically retracts deadbolt and latchbolt, and unlocks outside rim.

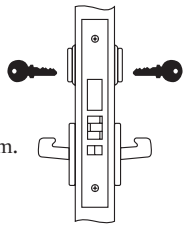

†Cylinder Code: B
Spindles:
Knobs, 3/8" (10mm), 1175K.
Levers, 3/8" (10mm), 1178L.

Model Numbers		Throw	
Knobs	Levers	Latchbolt	Deadbolt
8811-2	8811-2FL	3/4"	1"
	SL8811-2FL	3/4"	1"

CLASSROOM SECURITY LOCK (F34)

- Guardbolt deadlocks latchbolt.
- Latchbolt retracted by either trim unless outside trim is locked by key.
- Deadbolt operated by key on either side.
- When deadbolt is projected, outside trim is automatically locked.
- Key retraction of deadbolt unlocks outside trim.
- Anti-panic operation. Operating inside trim automatically retracts deadbolt and latchbolt, and unlocks outside trim.

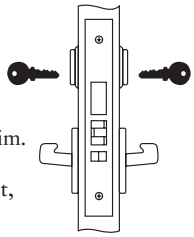

†Cylinder Code: B
Spindles:
Knobs, 3/8" (10mm), 1175K.
Levers, 3/8" (10mm), 1178L.

Model Numbers		Throw Latchbolt	
Knobs	Levers	Latchbolt	Deadbolt
8812-2	8812-2FL	3/4"	1"
	SL8812-2FL	3/4"	1"

CLASSROOM DEADLOCK (F29)

- Deadbolt by key outside, thumbturn inside.
- Thumbturn inside will retract the deadbolt but will not project it.
- NOT UL listed.

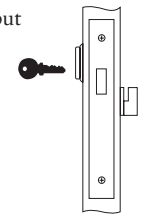

†Cylinder Code: A

Model Number	Throw Deadbolt
8813ST	1"

CLASSROOM DEADLOCK

- Deadbolt by key both sides.
- Thumbturn inside will retract the deadbolt but will not project it.
- NOT UL listed.

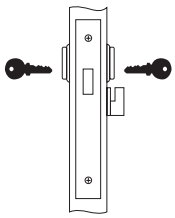

†Cylinder Code: B

Model Number	Throw Deadbolt
8813ST-2	1"

DEADLOCK (F18)

- Deadbolt by key outside only.
- No inside operation.
- NOT UL listed.

†Cylinder Code: A

List Number	Throw Deadbolt
8814	1"

DEADLOCK (F16)

- Deadbolt by key both sides. Note: Use only on room with more than one exit.
- NOT UL listed.

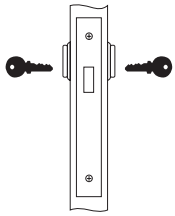

†Cylinder Code: A

Model Number	Throw Deadbolt
8814-2	1"

DEADLOCK (F17)

- Deadbolt by key outside, thumbturn inside.
- NOT UL listed.

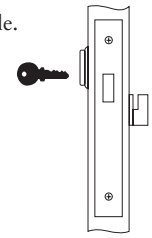

†Cylinder Code: A

Model Number	Throw Deadbolt
8815	1"

APARTMENT, EXIT OR PUBLIC TOILET LOCK (F09)

- Deadlocking latchbolt.
- Latchbolt by knob/lever either side, except when outside knob/lever is set by key inside.
- When outside knob/lever is set, latchbolt is operated by key outside and knob/lever inside.

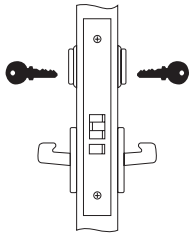

†Cylinder Code: C
Spindles:
Knobs, 3/8" (10mm), 1175K.
Levers, 3/8" (10mm), 1178L.

Model Numbers		Throw Latchbolt
Knobs	Levers	
8817-2	8817-2FL	3/4"
	SL8817-2FL	3/4"

†Cylinder Code defines the cylinder supplied as standard for each lock and the optional cylinder available, See Page 18.

LOCKSET FUNCTIONS

CLASSROOM SECURITY INTRUDER LOCK

- Guardbolt deadlocks latchbolt.
- Latchbolt retracted by either trim unless outside trim is locked by key.
- Deadbolt operated by key on either side.
- When deadbolt is projected, outside trim is automatically locked.
- Anti-panic operation. Operating inside trim automatically retracts deadbolt and latchbolt, and outside trim remains locked.
- Key retraction of latchbolt either side unlocks outside trim.

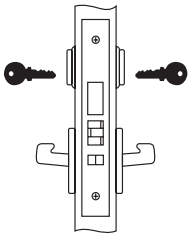

†Cylinder Code: B
Spindles:
Knobs, 3/8" (10mm), 1175K.
Levers, 3/8" (10mm), 1178L.

Model Numbers		Throw	
Knobs	Levers	Latchbolt	Deadbolt
8818-2	8818-2FL	3/4"	1"
	SL8818-2FL	3/4"	1"

HOTEL/MOTEL LOCK (F15)

- Deadlocking latchbolt.
- Outside knob/lever rigid at all times.
- Latchbolt by key outside, knob/lever inside.
- Guest room and master keys retract the latchbolt, only when the deadbolt is NOT projected.
- Deadbolt by emergency/shut-out or display key only outside, thumbturn inside.
- When deadbolt is projected, the indicator button projects out (indicating room is occupied). Access from outside can be gained only with an emergency/shut-out or display key.
- Anti-panic operation. Turning the inside knob/lever retracts both the latchbolt and deadbolt simultaneously.

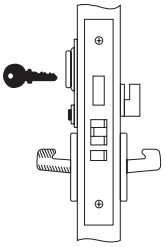

†Cylinder Code: E
Spindles:
Knobs, 3/8" (10mm), 1175K.
Levers, 3/8" (10mm), 1178L.

Model Numbers		Throw	
Knobs	Levers	Latchbolt	Deadbolt
8820	8820FL	3/4"	1"
	SL8820FL	3/4"	1"

DORMITORY LOCK (F13)

- Latchbolt by knob/lever either side.
- Deadbolt by key outside and thumbturn inside.
- When the deadbolt is projected, outside knob/lever is automatically made rigid.
- Anti-panic operation. Turning inside knob/lever retracts the latchbolt and deadbolt simultaneously, automatically unlocking outside knob/lever.

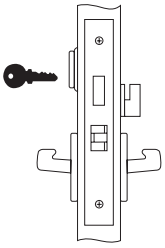

†Cylinder Code: A
Spindles:
Knobs, 3/8" (10mm), 1175K.
Levers, 3/8" (10mm), 1178L.

Model Numbers		Throw	
Knobs	Levers	Latchbolt	Deadbolt
8822	8822FL	3/4"	1"
	SL8822FL	3/4"	1"

STOREROOM LOCK

- Deadbolt operated by key from outside
- Latchbolt retracted by outside trim except when deadbolt is projected, outside trim is automatically locked
- No inside cylinder or trim

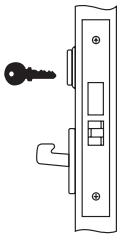

†Cylinder Code: A
Spindles:
Knobs, 3/8" (10mm), F1198.
Levers, 3/8" (10mm), F1198.

Model Numbers		Throw	
Knobs	Levers	Latchbolt	Deadbolt
8823	8823FL	3/4"	1"
	SL8823FL	3/4"	1"

EXIT LATCH (F31)

- For twin communicating or exit doors where one-sided operation is required.
- Deadlocking latchbolt.
- Inside knob/lever operates the latchbolt at all times.
- No outside operations.

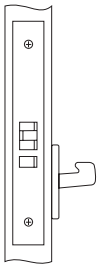

Spindles:
Knobs, 3/8" (10mm), F1198
Levers, 3/8" (10mm), F1198.

NOTE: The Finlandia (FN) escutcheon will be supplied on all escutcheon trim for hollow metal door installations.

Model Numbers		Throw Latchbolt
Knobs	Levers	
8828	8828FL	3/4"
	SL8828FL	3/4"

CLOSET LOCK

- Guardbolt deadlocks latchbolt.
- Latchbolt retracted by outside trim.
- Outside cylinder locks or unlocks outside trim.
- No inside cylinder or trim.

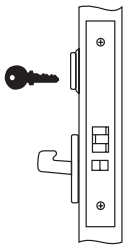

†Cylinder Code: A
Spindles:
Knobs, 3/8" (10mm), F1198.
Levers, 3/8" (10mm), F1198.

Model Numbers		Throw Latchbolt
Knobs	Levers	
8829	8829FL	3/4"
	SL8829FL	3/4"

†Cylinder Code defines the cylinder supplied as standard for each lock and the optional cylinder available, see Page 18.

LOCKSET FUNCTIONS

ASYLUM LOCK (F30)

- Deadlocking latchbolt.
- Latchbolt by key both sides.
- Ridge knob/lever both sides for use as pulls only.

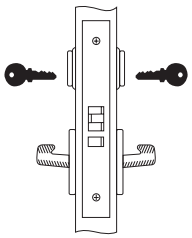

†Cylinder Code: B
Spindles:
Knobs, 3/8" (10mm), N1171-1/2.
Levers, 3/8" (10mm), 1173L.

Model Numbers		Throw Latchbolt	
Knobs	Levers	Latchbolt	Deadbolt
8830-2	8830-2FL	3/4"	1"
	SL8830-2FL	3/4"	1"

HOTEL/MOTEL LOCK

- Deadlocking latchbolt.
- Outside knob/lever rigid at all times.
- Latchbolt by key outside, knob/lever inside.
- Guest room and master keys retract the latchbolt, only when the deadbolt is NOT projected.
- Deadbolt by emergency/shut-out or display key only outside, thumbturn inside.
- Anti-panic operation. Turning the inside knob/lever retracts both the latchbolt and deadbolt simultaneously.

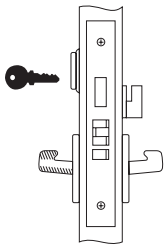

†Cylinder Code: E
Spindles:
Knob, 3/8" (10mm), 1175K.
Levers, 3/8" (10mm), 1178L.

Model Numbers		Throw	
Knobs	Levers	Latchbolt	Deadbolt
8832	8832FL	3/4"	1"
	SL8832FL	3/4"	1"

EXIT LOCK

- Deadlocking latchbolt.
- Latchbolt by key outside, knob/lever inside.
- No knob/lever/rose outside.

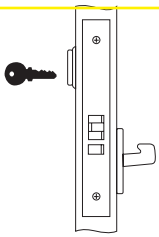

†Cylinder Code: A
Spindles:
Knobs, 3/8" (10mm), F1198.
Levers, 3/8" (10mm), F1198.

Model Numbers		Throw Latchbolt
Knobs	Levers	
8833	8833FL	3/4"

ALL-PURPOSE LOCK

- Deadlocking latchbolt.
- Latchbolt by key both sides.
- No operating trim either side.

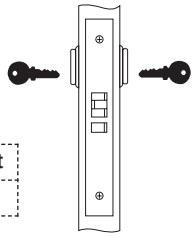

†Cylinder Code: B

Model Numbers	Throw Latchbolt
8833-2	3/4"

ENTRANCE OR APARTMENT DOOR LOCK (F20)

- Deadlocking latchbolt.
- Latchbolt by knob/lever either side, except when outside knob/lever is set by stopwork activator.
- Deadbolt by key outside, thumbturn inside.
- When outside knob/lever is set, key outside operates & retracts both latchbolt and deadbolt.
- Key outside retracts both latchbolt and deadbolt.
- When deadbolt is projected, outside knob/lever is automatically locked.
- Operating inside knob/lever automatically retracts latchbolt and deadbolt with outside knob/lever remaining locked.

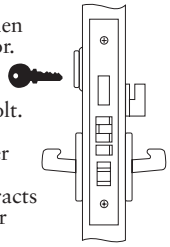

†Cylinder Code: A
Spindles:
Knobs, 3/8" (10mm), 1175K.
Levers, 3/8" (10mm), 1178L.

Model Numbers		Throw	
Knobs	Levers	Latchbolt	Deadbolt
8847	8847FL	3/4"	1"
	SL8847FL	3/4"	1"

ENTRANCE OR STOREROOM LOCK (F21)

- Latchbolt by knob/lever either side.
- Deadbolt by key outside and thumb turn inside.

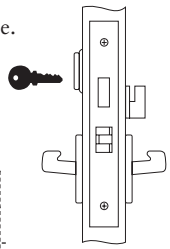

†Cylinder Code: A
Spindles:
Knobs, 3/8" (10mm), N1171-1/2.
Levers, 3/8" (10mm), 1173L.

Model Numbers		Throw	
Knobs	Levers	Latchbolt	Deadbolt
8860	8860FL	3/4"	1"
	SL8860FL	3/4"	1"

ENTRANCE OR STOREROOM LOCK (F14)

- Latchbolt by knob/lever either side.
- Deadbolt by key both sides.

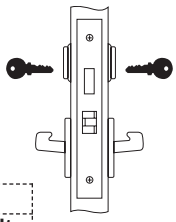

†Cylinder Code: B
Spindles:
Knobs, 3/8" (10mm), N1171-1/2.
Levers, 3/8" (10mm), 1173L.

Model Numbers		Throw	
Knobs	Levers	Latchbolt	Deadbolt
8860-2	8860-2FL	3/4"	1"
	SL8860-2FL	3/4"	1"

†Cylinder Code defines the cylinder supplied as standard for each lock and the optional cylinder available, See Page 18.

LOCKSET FUNCTIONS

DORMITORY OR STOREROOM LOCK

- Latchbolt retracted by either trim.
- Deadbolt operated from outside by key and from inside by thumbturn.
- When deadbolt is projected, outside trim is automatically locked.

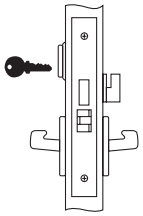

†Cylinder Code: A
Spindles:
Knobs, 3/8" (10mm), 1175K.
Levers, 3/8" (10mm), 1178L.

Model Numbers		Throw Latchbolt	
Knobs	Levers	Latchbolt	Deadbolt
8861	8861FL	3/4"	1"
	SL8861FL	3/4"	1"

BATHROOM LOCK (F22)

- Latchbolt retracted by either trim except when outside trim is locked by thumbturn.
- Anti-panic operation. Operating inside trim automatically retracts latchbolt and unlocks outside trim.
- Outside emergency release unlocks outside trim.
- Automatically unlocks when door latches.

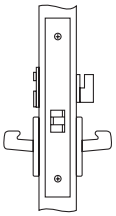

Spindles:
Knobs, 3/8" (10mm), 1175K.
Levers, 3/8" (10mm), 1178L.

Model Numbers		Throw Latchbolt
Knobs	Levers	
8862	8862FL	3/4"
	SL8862FL	3/4"

DORMITORY OR EXIT LOCK (F12)

- Latchbolt by knob/lever either side, except when the outside knob/lever is set by stop-work activator or automatically set when the deadbolt is projected.
- Deadbolt by key outside, thumbturn inside.
- When outside knob/lever is set, key outside operates and retracts both latchbolt and deadbolt.
- Key outside retracts both latchbolt and deadbolt.
- Anti-panic operation. Turning inside knob/lever retracts the latchbolt and deadbolt simultaneously, with outside knob/lever remaining locked.

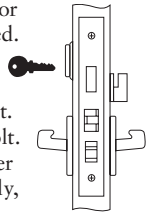

†Cylinder Code: A
Spindles:
Knobs, 3/8" (10mm), 1175K.
Levers, 3/8" (10mm), 1178L.

Model Numbers		Throw	
Knobs	Levers	Latchbolt	Deadbolt
8867	8867FL	3/4"	1"
	SL8867FL	3/4"	1"

DUMMY TRIM ONE SIDE

- Push or pull only.
- Knob or lever one side of door.
- Knob or lever rigid at all times, trim non-operational.
- Available in knob x rose or lever x rose only.

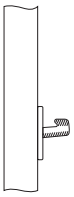

***Model Number 855 prefixed by Design Symbol (i.e. COR855 or CRR 855)**

DUMMY TRIM BOTH SIDES

- Push and pull only.
- Knobs or levers both sides of door.
- Both knobs or levers rigid at all times. Trim non-operational.
- Plain rectangular front used with spindle-bar stabilizer.
- Available in all sectional and escutcheon trim.

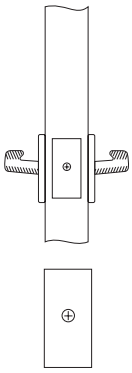

***Model Numbers:**
Knobs, 836A, prefixed by Design Symbol
(i.e. LFR836A, COE 836A)
Levered, 838A, prefixed by Design Symbol.
(i.e. JNR838A, JNE 838A)

DUMMY TRIM BOTH SIDES

- Push or pull only
- Knobs or levers both sides of inactive leaf of a pair of doors.
- Both knob or lever rigid at all times.
- Trim non-operational.
- Strike of active-door lockset used with spindle-bar stabilizer.
- Available in all sectional and escutcheon trim.

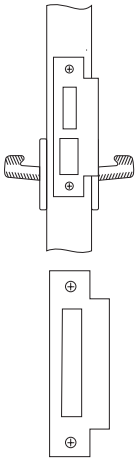

Spindles:
Knobs, 3/8" (10mm), N1171-1/2.
Levers, 3/8" (10mm), 1173L.

***Model Numbers:**
Knobs, 836B, prefixed by Design Symbol
(i.e. BRR836B, FNE836B).
Levered, 838B, prefixed by Design Symbol
(i.e. JNR838B, JNE 838B).

ACTIVE DUMMY TRIM

- Trim both sides.
- Push or pull only
- Primarily for lever handle trim.
- Knobs or levers free wheel to prevent damage.

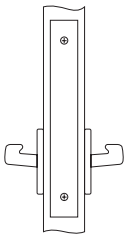

8871DT - Armor front acts as strike for latchbolt only functions.
8872DT - Armor front acts as strike for latchbolt x deadbolt functions.

Spindles:
Knobs, 3/8" (10mm), N1171-1/2.
Levers, 3/8" (10mm), 1173L.

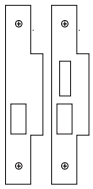

Model Numbers		
Knobs	Levers	Armor Front
8870DT	8870FLDT	Plain
8871DT	8871FLDT	Latchbolt Hole
8872DT	8872FLDT	Latchbolt/Deadbolt Hole

†Cylinder Code defines the cylinder supplied as standard for each lock and the optional cylinder available, See Page 18.

CYLINDERS

CYLINDER CODE

Each Yale® Mortise Lockset Function Model Number carries a Cylinder Code Letter (see Lockset Functions, pages 13-17). This Code Letter defines the standard mortise cylinder supplied with the Lock Model Number and the optional cylinders available for use with the specific locking function as outlined in the accompanying chart. For details of cylinders, see the listing for each type.

Cylinder length and cylinder ring size are determined by door thickness and trim design.

CYLINDER SELECTION GUIDE

Cylinder Code Letter	Standard Cylinder(s)	Adjustable Head†	Interchangeable Core Std.	Security/ High Security	Interchangeable Core Security
A	2153/2123	2186	2196 2197	5153/U5153	5196 5197
B	2153/2123 Both Sides	2186	2196 2197	5153/U5153	5196 5197
C	2153 Outside	2186	2196/2197	5153/U5153	5196/5197
	2153S Inside	2186S	2196S/2197S	5153S/U5153S	5196S/5197S
D	2153 Outside	2186	2196/2197	5153/U5153	5196/5197
	S2053S Inside	S2053S Inside	S2053S Inside	S2053S Inside	S2053S Inside
E	2719	NA	2196H	5719/U5719	5196H

†Applicable to sectional trim only.

CYLINDER OPTIONS

Conventional Cylinders:
2153/2153S: 1" (25mm) to 1-3/4" (44mm) Lengths in 1/8" (3mm) increments.
2123/2123S: 1-7/8" (48mm) to 3-1/2" (89mm) Lengths in 1/8" (3mm) increments.
2719 Hotel Cylinder: 1-3/8" (35mm) only.

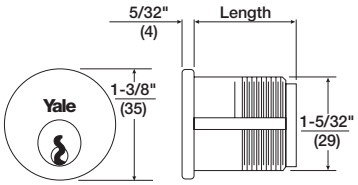

Interchangeable Core Cylinders:
2196/2196S: 6-pin, 1-1/2" (38mm) Length only.
2197/2197S: 7-pin, 1-11/16" (43mm) Length only.
2196H Hotel Cylinder: 1-11/16" (43mm) Length only.

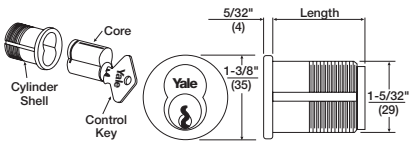

Yale KeyMark® PATENTED KEYWAY CYLINDERS

For those applications requiring patented key control, Yale's KeyMark® line of patented keyway cylinders provides the ultimate protection against unauthorized key duplication. *Yale KeyMark's* utility-patented Security Leg® keyway features increased resistance against picking and impressioning and can easily retrofit into existing systems. For further details and availability, refer to the separate *Yale KeyMark* catalog.

SECURITY CYLINDERS

The patented Yale® Security Cylinder (Patent No. 4,638,651) contains two independent locking mechanisms. The first is a traditional 6- or 7-pin tumbler mechanism with spool drivers for greatly increased picking resistance.

The second is an innovative 5-tumbler rotating disc mechanism with sidebar engagement. The rotating discs are spring loaded and block the bottom of the keyway.

Illustration

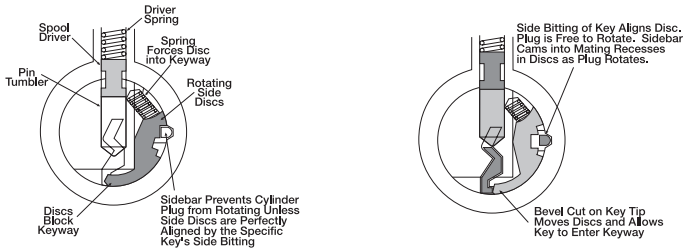

CYLINDERS

CYLINDER RINGS

Cylinder rings are supplied as standard where required with those locksets supplied with cylinders. Ring size and thickness are supplied to suit the length of the cylinder, the thickness of the door and the trim ordered. (If door thickness is not specified, rings will be furnished for 1-3/4" (44mm) door.)

1134 Tubular Cylinder Ring
"A" Dimension: Thicknesses from 1/16" (2mm) to 15/16" (24mm) as required.
Material: Brass

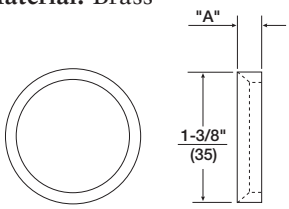

1135 Adjustable Cylinder Ring:

3/16" (5mm) Size: Adjusts from .22" (6mm) to .30" (8mm)

1/4" (6mm) Size: Adjusts from .26" (6mm) to .34" (9mm)

5/16" (8mm) Size: Adjusts from .30" (8mm) to .38" (1cm)

Material: Brass, Bronze

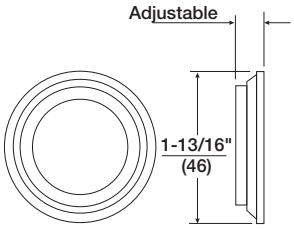

1765 Recessed Cylinder Ring
"A" Dimension: Thicknesses from 1/16" (2mm) to 1-15/32" (37mm) as required.
Material: Brass, Bronze

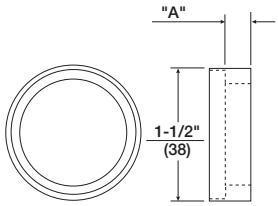

1767 Tubular Spacer Ring
"A" Dimension: 1/8"(3mm), 3/16" (5mm) and 5/16" (8mm)
Material: Brass, Bronze, Stainless Steel. (Used with 2186 and 2186S cylinders only.)

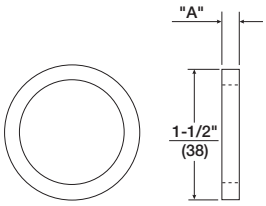

STRIKES

STRIKES

Each Yale® 8800 Mortise Lock Series will be supplied standard with a 2815 Curved Lip Strike with a 1-1/4" (32mm) lip length. The strike supplied will accommodate the locking function, i.e. latchbolt and/or deadbolt, and can be installed on doors 1-3/4" (44mm) thick. These strikes are reversible.

Longer/Shorter Lip Lengths: Mortise Lock Strikes are mounted 3/8" above the center line of the lock. To determine the proper length of lip, measure from the centerline of the strike to the edge of the jamb and add 1/8" (3mm) for Flat Strikes and 1/4" (6mm) for Curved Lip Strikes. Select the nearest available length.

2815 Curved Lip: 1-1/4" (32mm) regular; to special order, 1-1/8" (29mm), 1-3/8" (35mm), 1-1/4" (32mm), 1-3/8" (35mm), 1-5/8" (41mm), 1-7/8" (48mm), 2-1/8" (54mm), 2-3/8" (60mm), 2-5/8" (67mm), and 2-7/8" (73mm)

2816 Flat Lip: To special order, 1-1/8" (29mm) and 1-7/8" (48mm)

Material: Brass, Bronze, Stainless Steel.

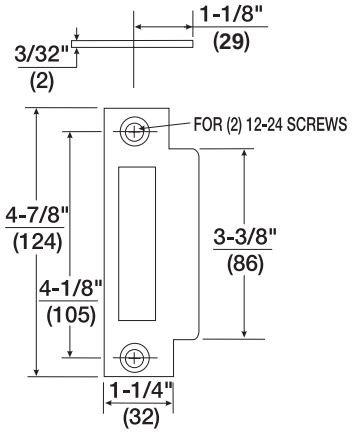

STRIKES/MISCELLANEOUS TRIM

OPTIONAL STRIKES

497B ANSI Blank Filler Plate: Reversible to replace a strike where a lock has been removed or where a frame with a strike preparation when no lock is installed on a door.
Lip Lengths: 1-1/8" (29mm) only.
Material: Brass, Bronze, Stainless Steel.

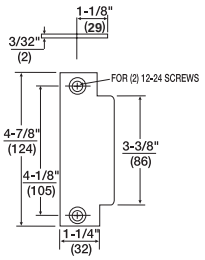

202 Strike Box: Reversible for installation with all Flat or Curved Lip Strikes. Available to special order only.
Material: Wrought Steel, Zinc Plated, Dichromated.

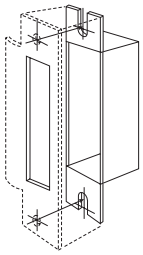

718 Open Back Strike: Field handable for a standard V-beveled pair of doors with a latchbolt only function on the active door. This strike permits emergency opening of the inactive door without damaging the lock mechanism. Available for doors 1-3/4" or 2-1/4" thick only. Specify the door thickness required.
Material: Stainless Steel, Black Nylon Coated.

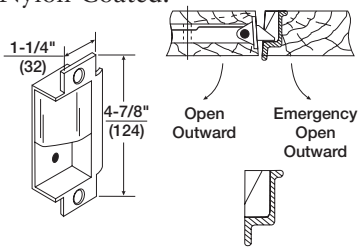

RABBETED DOOR KITS

Rabbeted Door Kits
The Yale® 8800 Mortise Lock Series can be installed on a pair of doors with a standard 1/2" (13mm) step rabbet. Kits are available which adapt these locks to the rabbeted doors. These kits contain a 1/2" (13mm) standard step rabbet strip for the active door, a strike, a strike box, and, depending on the door thickness, a strike lip. They are available for doors 1-3/4" (44mm), 2" (51mm) and 2-1/4" (57mm) thick. All components of these kits are reversible.

To order a complete *Yale* Mortise Lock with a Rabbet Door Kit, suffix the Lock Model Number with a Rabbeted Door by door thickness, hand and finish required, i.e. LW8807 x Rabbeted Door x 1-3/4" x RH x 626.

Kits for rabbeted doors can be ordered by Model Number separately from the accompanying chart. When ordered separately, specify the finish required.

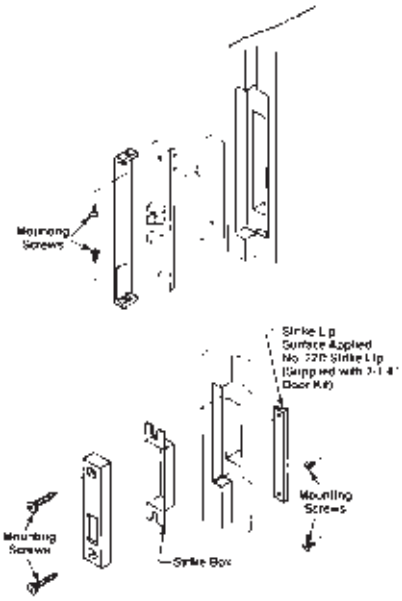

Door Thickness	Rabbeted Door Kit Model No.	Strike Model No.
1-3/4" 2"	RK245	22E
2-1/4"	RK246*	

* These kits contain the above components plus a No. 22D strike lip with attaching screws.

MISCELLANEOUS TRIM DESIGN

GF1824 Thumbturn and Round Plate

Supplied as standard on all locks with round rose sectional trim or lock functions with no roses.
Thumbturn: Brass, Bronze, Stainless Steel.
Plate: 1-7/8" (48mm) Diameter, Brass, Bronze, Stainless Steel.
GF1826-Plate Only - Used for outside of 8802 Privacy Lock.

ATTACHING SCREWS

GF1824 and GF1826
No. 6 x 3/8" (10mm) type "AB", Oval Phillips Head sheet metal screw, stainless steel plated to match trim
(P/N 81-3173-0308). Specify finish required.

HOW TO ORDER

ORDERING INFORMATION

From this outline select the Model Number for the Yale® 8800 Mortise Lockset Series you require.

Design	Model No.	Highest Keying Level	Description	Finish	Hand	*Cylinder	Door Thickness	Supplementary Specifications
See Pages 6-8,11-12	See Pages 13-17	"Level One" - KA or KD "Level Two" - MK "Level Three" - GM "Level Four" - GGM	Lockset	See Page 2	See Below	See Page 18	See Page 3	Lead Lined; knurled; abrasive coated; specific keying; keying; 7-pin cylinders' specific strike requirements other than standard, i.e. special lip length, curved, open back; special attachment or special-head screws, specify in detail; split finish, indicate outside finish first regardless of hand of door – but for RHR and LHR doors indicate finish desired for front and strike.

*If other than standard cylinder is required, specify by Model Number.

HAND OF DOORS

The outside is the key side of an entrance door or the corridor side of a room door. The outside of a single communicating door is the side opposite the hinges. The outside of twin communicating doors is the space between the doors.

Left Hand: Hinges on left, opens inward. For handed locks, specify LH.

Left Hand Reverse: Hinges on left, opens outward. For handed locks, specify LHR.

Right Hand: Hinges on right, opens inward. For handed locks, specify RH.

Right Hand Reverse: Hinges on right, opens outward. For handed locks, specify RHR.

online literature and templates

For the latest information on Yale Commercial Lock and Hardware products, visit our website at www.yalecommercial.com.

Click on the "Literature" button to find:

- Catalogs
- Parts manuals
- Templates
- Specifications
- Installation instructions

Yale® customers can click on the ebusiness symbol on the website to register for an ebusiness account to:

- Check the status of orders
- Check availability of Quick Ship items
- Track your order and confirm delivery
- Receive email notification of template changes

And More...

www.yalecommercial.com

Yale Commercial Locks and Hardware

Address: 1902 Airport Road, Monroe, NC 28110 USA

Tel: 1-800-438-1951 • *Fax:* 1-800-338-0965 • www.yalecommercial.com

Yale-Corbin Canada Ltd.

Address: 6940 Edwards Boulevard, Mississauga, Ontario, Canada L5T 2W2

Tel: 1-800-461-3007 • *Fax:* 1-800-461-8989 • www.yalecorbin.on.ca

Yale®, Yale Security Inc.®, Touchcode® and SecureX® are registered trademarks of Yale Security Inc. Other products brand names may be trademarks or registered trademarks of their respective owners and are mentioned for reference purposes only. Copyright© 2004 Yale Security Inc. All rights reserved. These materials are protected under US copyright laws. All contents current at time of publication. Yale Security Inc. reserves the right to change availability of any item in this bulletin, its design, construction, and/or its materials.

The ASSA ABLOY Group is the world's leading manufacturer and supplier of locking solutions, dedicated to satisfying end-user needs for security, safety and convenience.

An ASSA ABLOY Group brand

ASSA ABLOY

42002-MA-12.2-8/04N