1900 Series

Door Control Designed for Traditional and Period Decor

An ASSA ABLOY Group company

ASSA ABLOY

THE ENGINEER'S CHOICE

1900

Finishes

All Yale® 1900 Series Traditional Surface Closers are available in the following finishes. List the Yale symbol on the order.

Yale Symbol	ANSI Code	Finish Description (to complement)
SB	689	Silver Bronze (US28, US26D, US32D)
BL	691	Dull Bronze (US10)
315	693	Black (DY80)
GB	696	Gold (US4)
STAT	690	Dk. Statuary Bronze (US10B)
313	695	Dk. Amber Duranodic®

Introduction

The Yale® 1900 Series Traditional Surface Closer offers conventional closer styling in combination with contemporary closer control and the installation convenience of a one-size closer shell. Only two spring sizes are required to provide control for the complete range of door sizes. The 1900 Series Door Closers are designed for traditional and period decor while at the same time meeting the strict requirements of engineers worldwide.

The Yale® 1900 Series Traditional Closers are available for standard arm, parallel arm or corner bracket installation. Rigid heavy duty arms are also available for rigid parallel arm installation. Each type of installation is available with non-hold open or hold open arms. A variety of accessories are available to meet most installation requirements.

Performance Standards

U.L. Listing
The Yale® 1900 Series Closers have been tested and evaluated for public safety by Underwriters' Laboratories, Inc. Closers with non-hold open arms are U.L. Listed for self-closing fire doors. UL10C compliant.

Federal Specifications
The Yale® 1900 Series Door Closers with the appropriate options are designed and manufactured to meet or exceed the following specifications:

- FF-H-121C Type 3001.
- FF-H-121D/ANSI/BHMA Spec. A156.4 Type C01002 with options PT 4A, PT 4B, PT 4C, PT 4D and PT 4H. Option PT 4F "Delayed Action" closing is also available by suffixing "DL" to the Yale List Number.
- May be adjusted to comply with requirements of the Americans With Disabilities Act (A.D.A.) and ANSI Standard A117.1.

Contents

Introduction 2
Performance Standards 2
Finishes 2
Door Closer Features 3
Regular Arm Installation 4
Parallel Arm Installation 5
Rigid Parallel Arm Installation. 6
Corner Bracket Installation 7
Accessories 8-11
How To Order 12

THE ENGINEER'S CHOICE 1900

Features

One-Size Aluminum Housing: Closer is housed in special aluminum alloy shell selected for its ability to provide optimum performance. One body size provides simplified templating and installation.

Adjustable Spring Power: Clock-type coil spring allows incremental adjustment of closer power to meet individual installation needs. The closing force can be increased by at least 50% over the minimum closing force for each closer size. A spanner wrench is provided with each closer for power adjustment.

Rack and Pinion Design: Provides smooth continuous control through the complete opening and closing cycle.

Adjustable Backcheck Cushioning: An independent regulating valve is provided for increasing or decreasing the strength of the backcheck cushioning with a 1/8" (3mm) hex key.

Non-Hold Open Arms: Supplied standard with closer. Arms are non-handed.

Adjustable Power Standard Installation Jamb Bracket: Provides a ±7-1/2% power adjustment by relocation of the forearm pin in the jamb bracket. Supplied standard with all standard installation and corner bracket installation non-hold open closers.

Rigid Parallel Arm: For applications where heavy traffic and usage are anticipated, closer is supplied with heavy duty rigid forearm and heavy duty soffit bracket. Available with non-hold open or hold open feature. Hold open arm is handed.

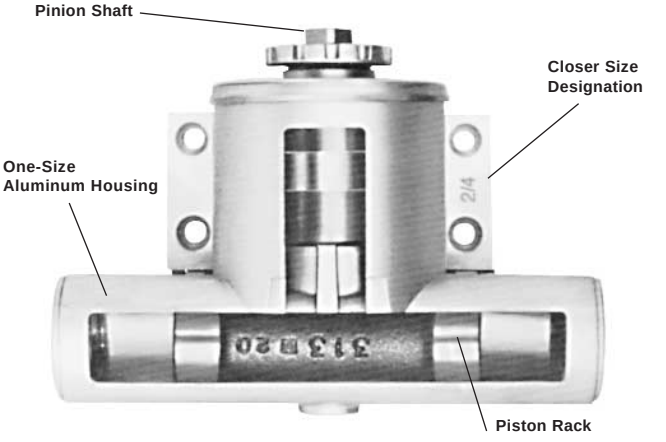

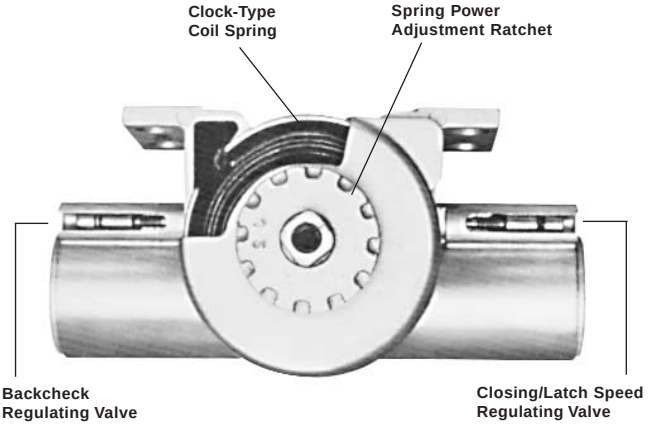

Hold Open Arms: Permit door to be held open at any point between 90˚ and 180˚ by using different closer mounting locations. Hold open arms are non-handed for standard arm and corner bracket installations. Hold open arms are handed for parallel arm and rigid parallel arm installations.

Field Reversible: Closer spring can be reversed to accommodate the hand of the installation when arms are non-handed. To save time and costs on the job site, it is recommended to order the closer for the proper hand of door. Delayed action closers are not reversible.

Delayed Action Closing: Closer's initial closing speed at the beginning of the closing cycle (from full open down to approximately 70°) is adjustable, allowing slow-moving traffic to pass through the opening before the closer begins its normal closing speed. For standard arm non-hold open closers only. Delayed action closers are handed. They are not available with backcheck cushioning.

REGULAR ARM INSTALLATION 1900

Standard Installation

On standard installations the closer body is mounted to the door on the pull or hinge side with the arm bracket mounted to the frame face above the door. This installation provides optimum closer power and control for door openings to 135˚ where wall clearance permits.

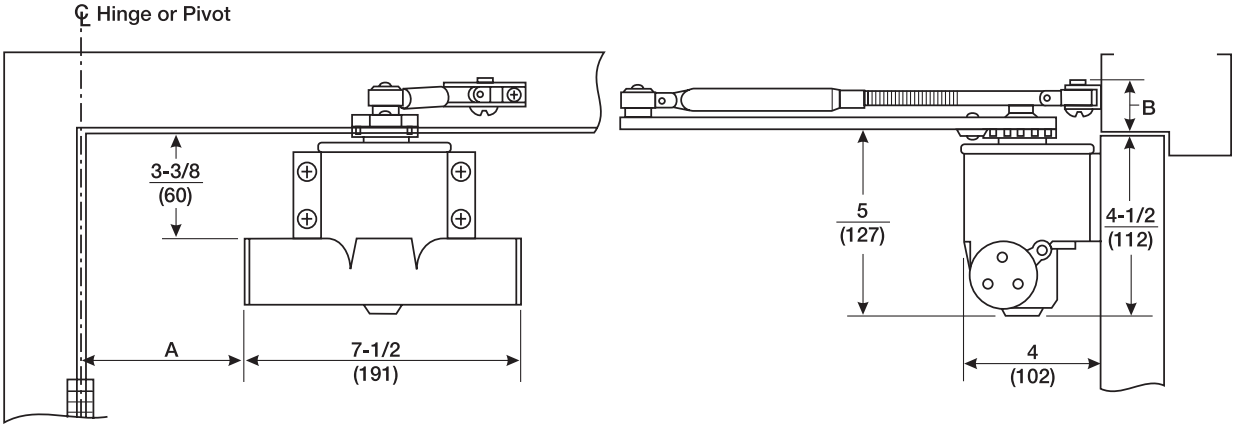

Door Size and List Number

Maximum Door Size Wood or Metal		Yale List Number		"A" Template Position for 100º Door Opening	"B" Minimum Ceiling Clearance	
Interior	Exterior	Non-Hold Open	Hold Open		Non-Hold Open	Hold Open
4'0" (1.22mm)	3'0" (0.91mm)	1902/4	1912/4	6-3/4" (171mm)	1-1/2" (38mm)	2-1/8" (54mm)
-----	3'8" (1.12mm)	1905/6	1915/6			

All dimensions are for reference only. Dimensions are given in inches (mm) unless otherwise noted. Door sizing information is based on installation on standard weight doors, 7'0" (2.13m) high x 1-3/4" (44mm) thick, hung on anti-friction hinges and operating under normal conditions.

PARALLEL ARM INSTALLATION 1900

Parallel Arm Installation

On parallel arm installations the closer body is mounted to the door on the push or opposite to hinge side and the arm bracket is mounted to the frame soffit.

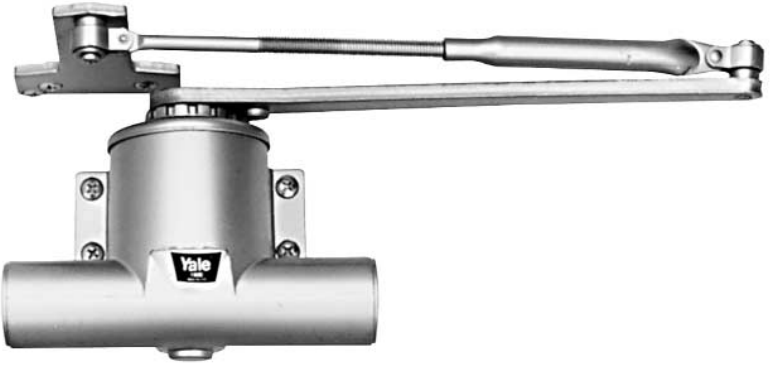

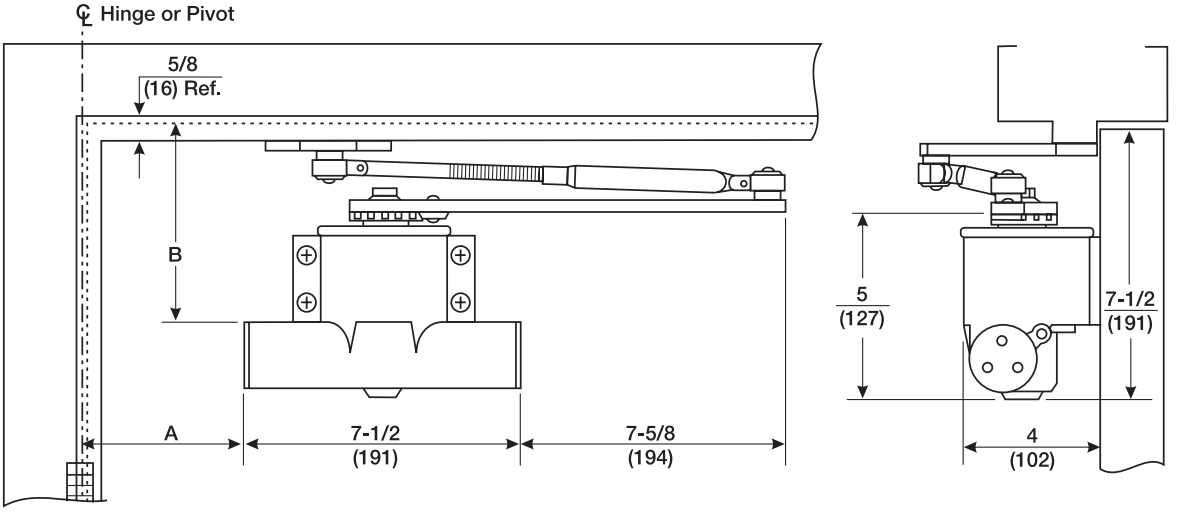

Door Size and List Number

Maximum Door Size Wood or Metal		Yale List Number		"A" Template Position for 130º Door Opening	"B" Minimum Top Rail	
Interior	Exterior	Non-Hold Open	Hold Open		Without Drop Plate	With 1988 Drop Plate
3'6" (1.22mm)	3'0" (0.91mm)	PA1902/4	PA1912/4	7-1/8" (181mm)	5-3/4" (146mm)	2-1/2" (64mm)
-----	3'8" (1.12mm)	PA1905/6	PA1915/6			

All dimensions are for reference only. Dimensions are given in inches (mm) unless otherwise noted. Door sizing information is based on installation on standard weight doors, 7'0" (2.13m) high x 1-3/4" (44mm) thick, hung on anti-friction hinges and operating under normal conditions.

PARALLEL RIGID ARM INSTALLATION 1900

Rigid Parallel Installation

Rigid Parallel Arm Closers feature a heavy duty forearm and a heavy duty soffit bracket for applications where heavy traffic and high usage are anticipated. The closer is mounted to the door's top rail on the push or opposite to hinge side and the arm bracket is mounted to the frame soffit/stop. The non-hold open arm is not handed. The hold open arm is handed. Uses the same mounting dimensions as the Parallel Arm Closer.

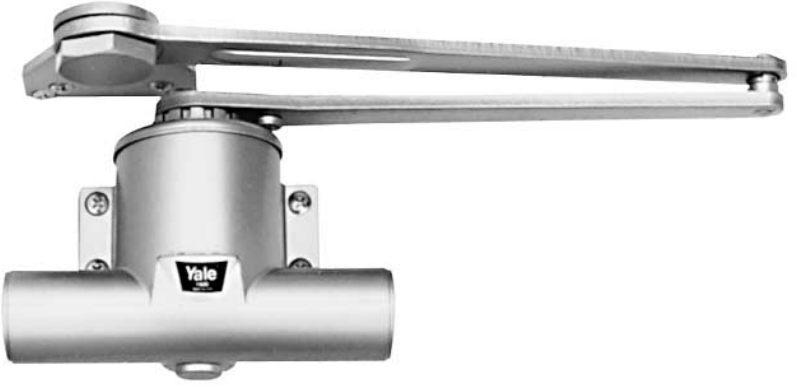

Door Size and List Number

Maximum Door Size Wood or Metal		Yale List Number		"A" Template Position for 130º Door Opening	"B" Minimum Top Rail	
Interior	Exterior	Non-Hold Open	Hold Open		Without Drop Plate	With 1988 Drop Plate
3'6" (1.22mm)	3'0" (0.91mm)	PA1902/4	PA1912/4	7-1/8" (181mm)	5-3/4" (146mm)	2-1/2" (64mm)
-----	3'8" (1.12mm)	PA1905/6	PA1915/6			

All dimensions are for reference only. Dimensions are given in inches (mm) unless otherwise noted. Door sizing information is based on installation on standard weight doors, 7'0" (2.13m) high x 1-3/4" (44mm) thick, hung on anti-friction hinges and operating under normal conditions.

CORNER BRACKET INSTALLATION 1900

Corner Bracket Installation

On corner bracket installations the corner bracket and closer body are fastened to the frame soffit/stop on the push or opposite to hinge side of the door. The closer arm jamb bracket is mounted to the top rail of the door. Permits door openings to 180˚, wall conditions permitting. Corner bracket installation is generally used where conditions prevent application of the closer body to the door.

NOTE: The use of a frame-mounted closer bracket requires a door closer of the opposite hand from that of the door.

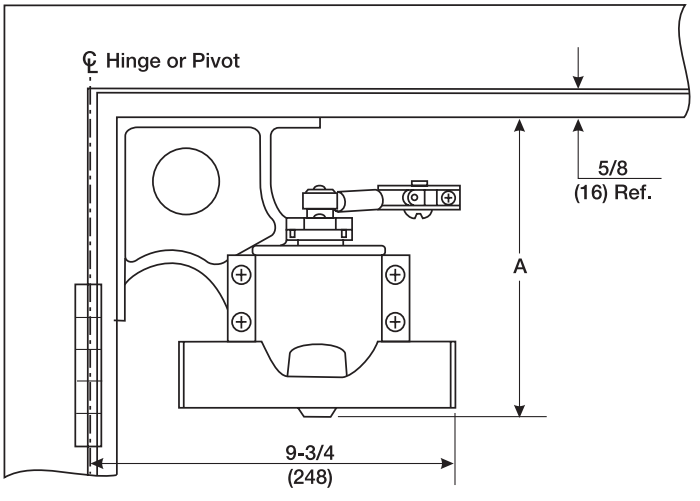

Door Size and List Number

Maximum Door Size Wood or Metal		Yale List Number Bracket List #		"A" Drop Bracket List Number	
Interior	**Exterior**	**Non-Hold Open**	**Hold Open**	**1950**	**2950**
3'6" (1.07mm)	3'0" (0.91mm)	1902/4 x	1912/4 x	7" (178mm)	8" (203mm)
-----	3'8" (1.12mm)	1905/6 x	1915/6 x		

All dimensions are for reference only. Dimensions are given in inches (mm) unless otherwise noted. Door sizing information is based on installation on standard weight doors, 7'0" (2.13m) high x 1-3/4" (44mm) thick, hung on anti-friction hinges and operating under normal conditions.

REGULAR ARM ACCESSORIES

1900

Accessories

291 Bull Nose Non-Hold Open Mortise Bracket: For installations where a door frame with molded or bull nose trim will not permit installation of the standard non-hold open jamb bracket. Bracket is recessed into the frame rabbet and projects beyond the frame face. It will accommodate frame rabbets up to 2" (51mm) deep.

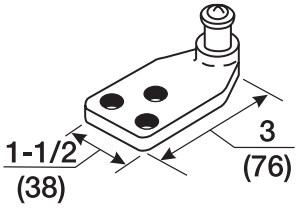

292 Bull Nose Hold Open Mortise Bracket: For installations where a door frame with molded or bull nose trim will not permit installation of the standard hold open arm bracket. Bracket is recessed into the frame rabbet and projects beyond the frame face. It will accommodate frame rabbets up to 2" (51mm) deep. This bracket is used in combination with the standard hold open arm bracket.

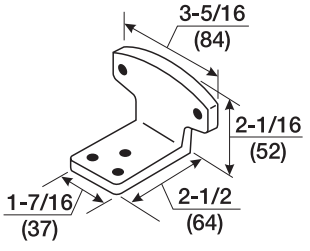

70 and 990 Series Closer Adapter Plates: For replacing a 70 Series or a 990 Series Closer with a 1900 Series Closer. These plates mount directly to the door using the closer mounting holes in the door. The 1990 Series closer is then mounted to the adapter plate.Dimensions are given in inches (mm) unless otherwise noted.

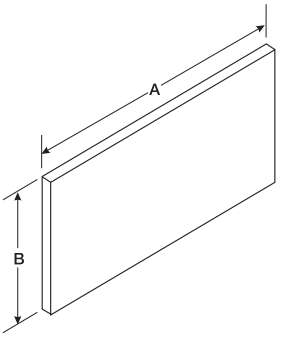

291A Bull Nose Non-Hold Open Mortise Bracket: Identical in application to the 291 bracket but will accommodate frame rabbets between 2" (51mm) and 2-7/8" (73mm) deep.

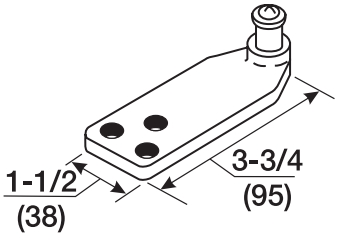

292A Bull Nose Hold Open Mortise Bracket: Identical in application to the 292 Bracket but will accommodate frame rabbets between 2" (51mm) and 2-7/8" (73mm) deep.

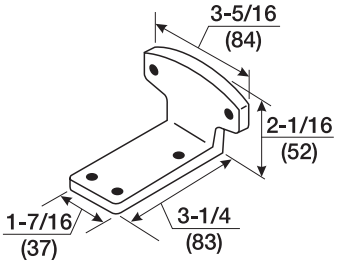

Replacing Closer	Adapter Plate List Number	Dimensions	
		A	B
72	1970	5-9/16 (141)	2-11/16 (68)
73	1970		
74	Not Req'd.		
75	1970		
992/993	1983	5-1/2 (140)	2-5/8 (67)
994	Not Req'd.	-----	-----
995/996	1986	5-1/2 (140)	5-1/2 (140)

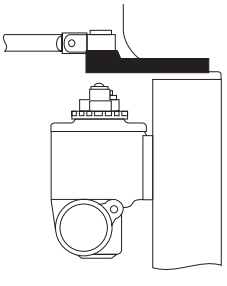

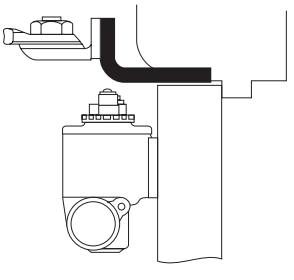

PARALLEL ARM ACCESSORIES 1900

Accessories

289 Standard Non-Hold Open Arm Soffit Bracket: Supplied standard with all non-hold open parallel arm closers. Requires minimum soffit/stop width of 1" (25mm). (No. 891 spacer block may be used in conjunction with this bracket to provide arm) clearance on blade stop frames.

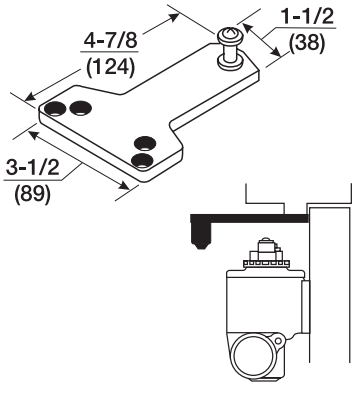

589L Non-Hold Open Flush Transom Bracket: For installation where a flush transom or rabbeted door and frame do not permit use of standard soffit bracket. Used in conjunction with standard 289 Soffit Bracket. (Fig. 1)

For installations where a flush transom or rabbeted door and frame do not permit use of standard **hold open** soffit bracket. Used in conjunction with standard hold open soffit bracket. (Fig. 2)

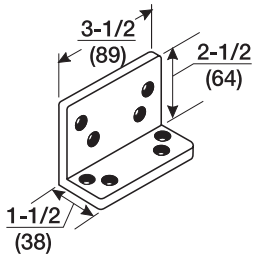

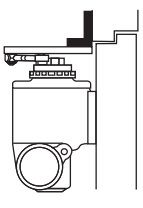

Fig. 1

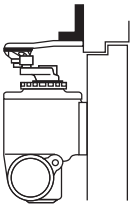

Fig. 2

413A Non-Hold Open Between Door Bracket: For installations where it is desired to mount closer between two doors. Requires minimum 4-1/8" (105mm) header clearance between doors.

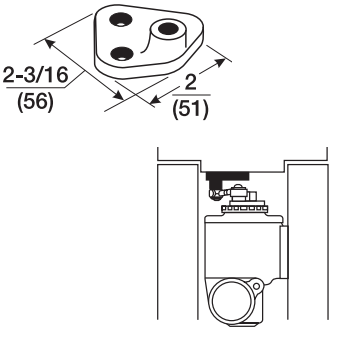

290 Non-Hold Open Extra Clearance Bracket: For installations where closer is used in conjunction with overhead door holder. Bracket drops the closer 1-1/2" (38mm) farther than standard soffit bracket to provide necessary arm clearance. Requires minimum width of 2-5/8" (67mm) mounting surface on soffit. May also be mounted to frame rabbet where unusually high frame stops or weather stripping will not permit use of standard soffit bracket.

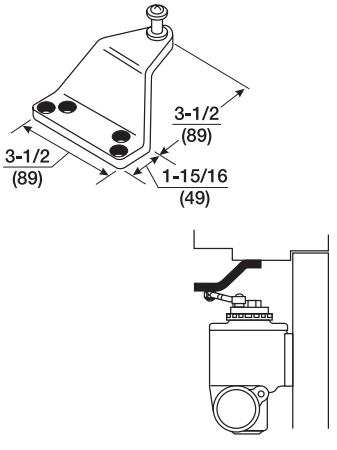

297 Non-Hold Open Narrow Frame/Removable Stop Bracket: For installations where a narrow frame with removable stop does not permit use of standard soffit bracket. May be mounted on frame soffit or frame rabbet where stop does not exceed 5/8" (16mm) high. All screw holes are in a straight line, requiring as little as 1-1/4" (32mm) frame reveal to mount bracket and maintain good closer arm geometry. Where frame soffit is as wide as 2" (51mm), soffit plate may be used to clear weather stripping up to 1-3/8" (35mm) wide x 5/8" (16mm) high.

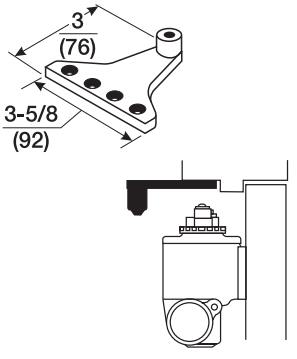

1988 Narrow Top Rail Drop Plate: See page 10 for description.

70 and 990 Series Closer Adapter Plates: See page 8 for description.

Dimensions are given in inches (mm) unless otherwise noted.

PARALLEL ARM ACCESSORIES

1900

Accessories

293S Standard Spacer Block: For installation on those frames where frame soffit is not wide enough to support the arm bracket. Supplied standard with all rigid parallel arm closers.

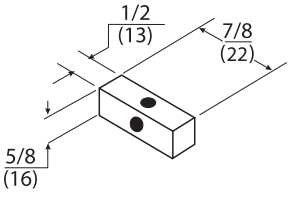

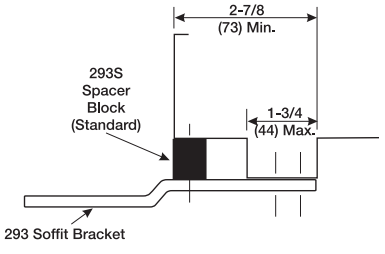

890 Narrow Frame Support Bracket: For installations where a narrow frame will not accommodate the 293S Spacer Block. Used in conjunction with the 891 Spacer on blade stop frames to provide support and necessary stop clearance. Can be installed on frames with reveals between 2" (51mm) and 2-3/4" (70mm).

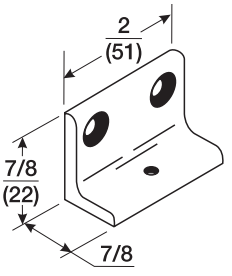

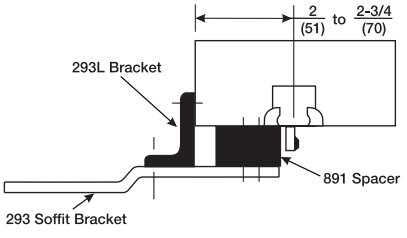

1988 Narrow Top Rail Drop Plate: For installations where door's top rail is too narrow to accommodate normal closer mounting. Requires minimum top rail of 2-1/2" (64mm) with maximum stop height of 5/8" (16mm).

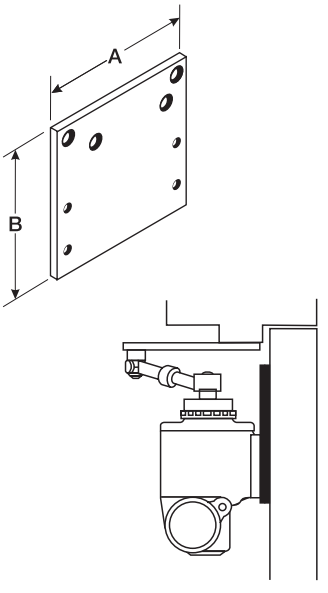

Dimensions are given in inches (mm) unless otherwise noted.

891 Blade Stop Spacer: For installation on frames with blade stop. Spacer is mounted to frame rabbet, enabling the arm to clear blade stop. Used in conjunction with the 293S Spacer Block. Requires minimum 2-7/8"(73mm) deep frame reveal to blade stop.

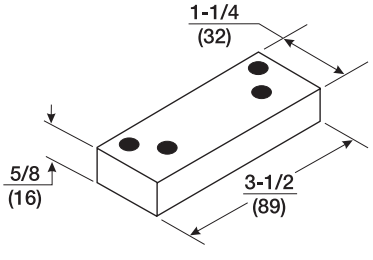

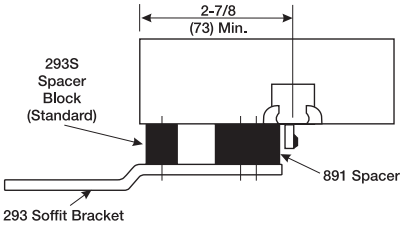

293L Flush Transom Bracket: For installations where a flush transom or rabbeted door and frame will not accommodate the standard 293 arm soffit bracket. It is used in conjunction with the 293 soffit bracket.

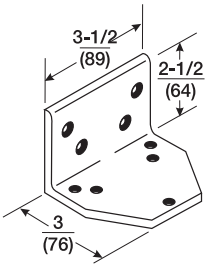

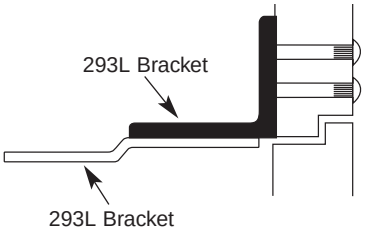

CORNER BRACKET ACCESSORIES 1900

Accessories

1950 Corner Bracket: For installations where there is no conflict with other door hardware or weather stripping. Requires a minimum soffit/stop width of 1-3/8" (35mm). See page 7 for illustration.

2950 Extra Drop Corner Bracket: For installations where an overhead door holder is used. This bracket drops the closer arm 1" (25mm) farther than the 1950 Bracket, to provide clearance for the overhead door holder. A minimum soffit/stop width of 1-3/8" (35mm) is required for installation of this bracket. See page 7 for illustration.

964 Adjustable Bracket: For installation on the push or opposite to hinge side of Gothic arched or circular top doors. This bracket is adjustable to accommodate virtually any frame radius. Requires a minimum frame soffit/stop width of 2-1/2" (64mm).

NOTE:The use of a frame-mounted closer bracket requires a door closer of the opposite hand from that of the door.

974 Adjustable Bracket: For installation on the pull or hinge side of Gothic arched or circular top doors. Bracket mounts on the door and raises the closer to permit the closer arm to clear the top of the door. The arm bracket mounts on the frame face. Base diameter is 3-5/8" (92mm).

70 and 990 Series Closer Adapter Plates: For replacing a 70 Series or a 990 Series Closer with a 1900 Series closer. These plates mount directly to the door using the closer mounting holes in the door. The 1900 Series Closer is then mounted to the adapter plate.

Dimensions are given in inches (mm) unless otherwise noted.

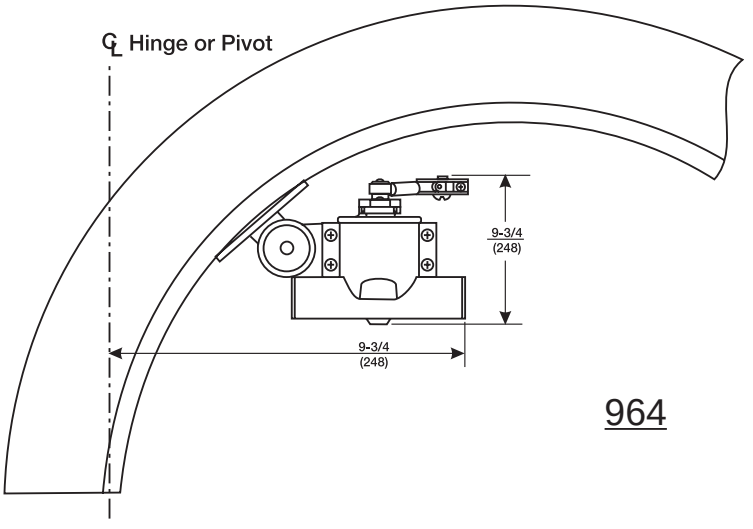

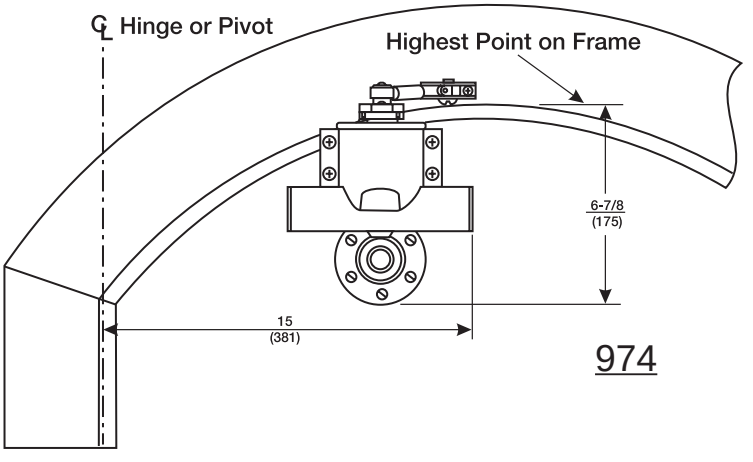

Replacing Closer	Adapter Plate List Number	Dimensions	
		A	B
72	1970	5-9/16 (141)	2-11/16 (68)
73	1970		
74	Not Req'd.		
75	1970		
992/993	1983	5-1/2 (140)	2-5/8 (67)
994	Not Req'd.	-----	-----
995/996	1986	5-1/2 (140)	2-5/8 (67)

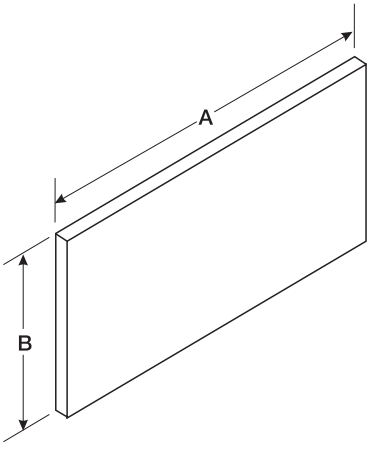

HOW TO ORDER 1900

Ordering Information

From this outline select the List Number for the Yale 1900 Series Door Closer you require.

P A	1 9	0	2/4	D L	Finish

Prefix - Type of Mounting:
- **None -** Standard Arm Application
- **PA -** Parallel Arm Application
- **PR -** Rigid Parallel Arm Application

Basic Series Number:

Arm Function:
- **0 -** Non-hold open
- **1 -** Hold open

Closer Size:
- **2 -** Size 2/4
- **3 -** Size 2/4
- **4 -** Size 2/4
- **5 -** Size 5/6
- **6 -** Size 5/6

Suffixes:
- **"DL" -** Delayed Action (Regular Non-hold open Arm Application Only), Handed

Finish Code:
See Page 2

Door Size and List Number

Maximum Door Size Wood or Metal		Standard Arm Function List Number	Maximum Door Size Wood or Metal		Installation Type List Number with Arm Function	
Interior	Exterior		Interior	Exterior	Corner Bracket	Parallel Arm Function List No.*
4'0" (1.22mm)	3'0" (0.91mm)	1902/4 NHO 1912/4 HO	3'6" (1.07mm)	3'0" (0.91mm)	1902/4 x Bracket 1912/4 x Bracket	PA1902/4 NHO PA1912/4 HO
-----	3'8" (1.12mm)	1905/6 NHO 1915/6 HO	-----	3'8" (1.12mm)	1905/6 x Bracket 1915/6 x Bracket	PA1905/6 NHO PA1915/6 HO

*For Rigid Parallel Arm prefix the list number with "PR".
Door sizing information is based on installation on standard weight doors, 7'0" (2.13m) high x 1-3/4" (44mm) thick; hung on anti-friction hinges and operating under normal conditions. **NHO -** Non-Hold Open Arm **HO -** Hold Open

Products and Packing

Yale 1900 Series Door Closers are designed to satisfy a variety of hardware applications in keeping with traditional and period decor and at the same time offering the latest in closer control. Two spring sizes are required to provide control for the complete range of door sizes, and only one closer shell is available, which makes installation very convenient.

All Yale 1900 Series Door Closers are packed one per box with the appropriate arm, hex key for valve adjustment, complete installation and adjustment instructions and both wood screws and machine screws for mounting. Hold open closer will also include a hold open nut adjustment wrench. Thru bolts and grommet nuts, and sex nuts are available to special order.

Left Hand: Hinges on left, opens inward. For handed locks, specify LH.

Left Hand Reverse: Hinges on left, opens outward. For handed locks, specify LHR.

Right Hand: Hinges on right, opens inward. For handed locks, specify RH.

Right Hand Reverse: Hinges on right, opens outward. For handed locks, specify RHR.

Online Literature and Templates

For the latest information on Yale products visit our website at www.yalelocks.com. Click on the "Literature" button to find the most up-to-date catalogs, parts manuals, templates, specifications and installation instructions.

Yale customers can also check the status of orders, account receivable statements and warehouse stock items with an *e*business account. Look for the symbol and click on it to register for an *e*business account.

We invite you to browse our website and access information at any time!

In U.S.A., Yale Commercial Locks and Hardware
1902 Airport Road, Monroe, NC 28110
Tel: (800) 438-1951 • Fax: (800) 338-0965
www.yalelocks.com

In Canada, Yale-Corbin Canada Ltd.
6940 Edwards Blvd., Mississauga, Ontario, Canada L5T 2W2
Tel: (800) 461-3007 • Fax: (800) 461-8989
www.yalecorbin.on.ca

Yale®, Yale Security Products®, Yale Security Inc.® are registered trademarks of Yale Security Inc. These materials are protected under U.S. copyright laws. All contents current at time of publication. Yale Security Inc. reserves the right to change availability of any item in this catalog, its design, construction, and/or its materials. Other product brand names may be trademarks or registered trademarks of their respective owners and are mentioned for reference purposes only.

The ASSA ABLOY Group is the world's leading manufacturer and supplier of locks and associated products, dedicated to satisfying end-user needs for security, safety and convenience.

An ASSA ABLOY Group company

ASSA ABLOY

42066-MA-5.0-8/01R