LOCKNETICS® by SCHLAGE

MagForce™ 390+ Series Electromagnetic Lock

The **High Security** Solution

MagForce™ LIFETIME WARRANTY

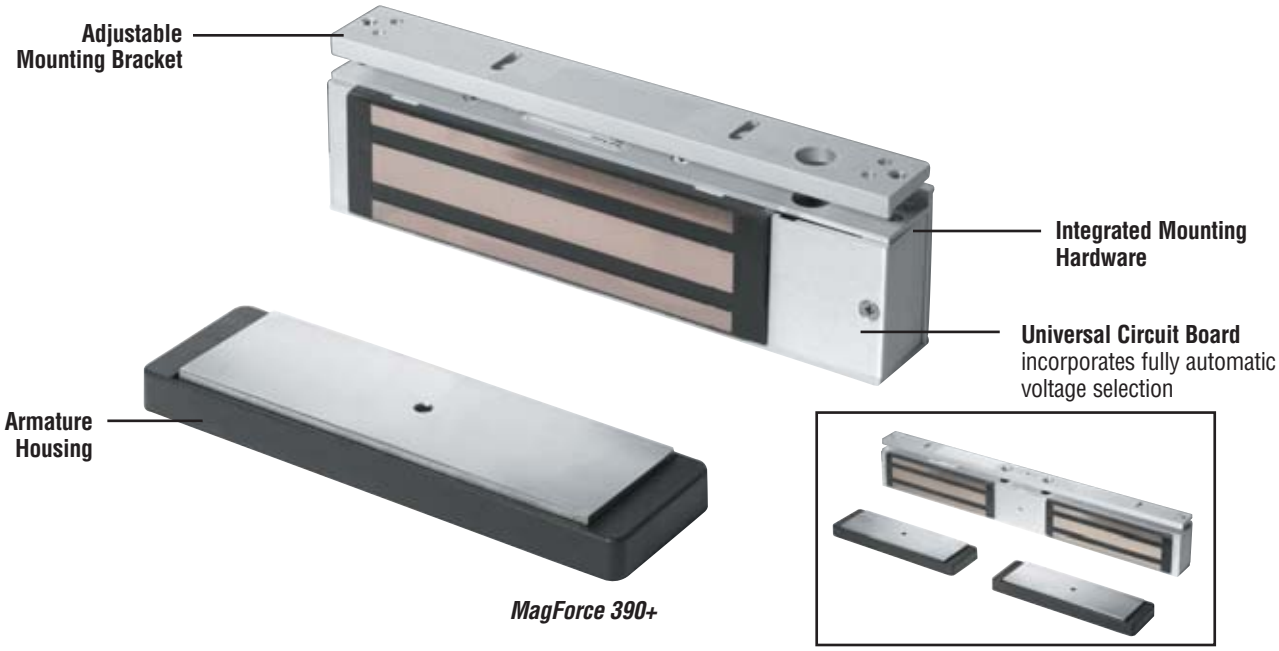

MagForce 390+

MagForce 392+ Double

New

Now with Fully Automatic Voltage Selection

The 390+ surface mounted electromagnetic lock is ideal for high security applications. This lock exceeds ANSI/BHMA A156.23 Grade 1 standards with 1650 pounds of direct holding force and is UL listed as an auxiliary lock for a 3 hour fire rated opening and for burglary resistance.

The 390+ is available for single, inswinging or outswinging, hollow metal, aluminum, and wood doors and frames as well as glass doors. The 392+ is available for pairs of hollow metal, aluminum, and wood doors and frames as well as glass doors without a mullion. The 391+ with split armature is used with pairs of hollow metal, aluminum, and wood doors and frames without a mullion.

All models are ideal for open architecture and easily interface with electronic access control systems, automatic door operators, and fire or other hazard sensing systems for egress and emergency egress.

Benefits of Using MagForce™ 390+

- *Fully Automatic Voltage Selection simplifies installation*
- *Modular design employs a standardized circuit board with easy to install connectors, adjustable mounting brackets, integrated mounting screws, and slide-in architectural finish plates*
- *The uniquely designed armature housing holds the armature in place, eliminating the noise and sagging possible with other armatures*
- *The armature housing increases the overall reliability of the product and provides an aesthetically pleasing look over traditional armature mountings, blending into the surrounding environment more easily*
- *The armature housing holds the magnets for the DSM option without having to mount an additional plate to the armature, ensuring quicker, more reliable installation*

1650 lbs. Holding Force

MADE IN USA

c UL us

BHMA CERTIFIED

CSFM
MEA 14-95-6

LOCKNETICS® by SCHLAGE

MagForce™ 390+ Series Electromagnetic Lock

The **High Security** Solution

How To Order MagForce 390+

390+ – ATS – 666 – CLH90

- **Select Model**
- **Select Options**
- **Select Finish**
- **Select Accessories**

1. Select Model

390+	High Security – Single Lock
391+	High Security with Split Armature
392+	High Security – Double Unit
390+ DSM/MBS	Single Lock with Door Status Monitor/ Magnetic Bond Sensor
392+ DSM/MBS	Double Lock with Door Status Monitor/ Magnetic Bond Sensor

2. Select Options/Accessories

RTD/RTD2	Relocking Time Delay	
ATS/ATS2	Anti-tamper Switch	
HDB*	Herculite Door Bracket	
	Single	HDB890
	Double	HDB892
L1/L2**	LED indicator	
RCP/RCP2	Voltage Rectifier	
TJ**	Top Jamb for inswing door	
	Single	TJ90
	Double	TJ92
	Split	TJ91
CLH	Custom Length Housing (Factory cut)	
	Horizontal Single	CLH90-3
	Horizontal Double	CLH92-4
	Vertical Single	CLH90-5
	Vertical Double	CLH92-6
VLH	Variable Length Housing (Field Cut)	
	Horizontal Single	VLH90-3
	Horizontal Double	VLH92-4
	Vertical Single	VLH90-5
	Vertical Double	VLH92-6

* HDB/DSM/MBS option not available for 391+ model

** L1/L2 option only available on DSM/MBS models, not available for TJ applications

3. Select Finish

628	US28	Satin Aluminum, Anodized ***(standard)***
335	US19	Satin Black, Anodized
612B	US10	Satin Bronze
612SF	US10	Satin Bronze-SF
613SF	US10B	Dark Satin Bronze, Anodized
628B	US28	Satin Aluminum, w/ Black
666B	US3	Bright Brass
666SF	US3	Bright Brass-SF
672B	US26	Bright Chrome
672SF	US26	Bright Chrome-SF

Armature housing finish standard Lexan black

B suffix – Satin black anodized 335/US19 housing with choice of select special finish for slide plates only

SF suffix – Special finish for all metal surfaces

Specifications:

390+

Holding Force: 1650 lbs.
Input Voltage: 12/24 VDC
Current Draw: .60A@12VDC
.30A@24VDC
Height: $2\frac{3}{4}$"
Length: $10\frac{1}{2}$"
Width: $1\frac{11}{16}$"
Weight: 10.60 lbs

391+

Holding Force: 750 lbs. per door leaf
Input Voltage: 12/24 VDC
Current Draw: .60A@12VDC
.30A@24VDC
Height: $2\frac{3}{4}$"
Length: $10\frac{1}{2}$"
Width: $1\frac{11}{16}$"
Weight: 10.60 lbs

392+

Holding Force: 1650 lbs. per door leaf
Input Voltage: 12/24 VDC
Current Draw: 1.2A@12VDC
.60A@24VDC
Height: $2\frac{3}{4}$"
Length: $20\frac{5}{8}$"
Width: $1\frac{11}{16}$"
Weight: 20.70 lbs

Questions? Call: 866-322-1237 • FAX: 866-322-1233 • Visit us on the Internet at www.locknetics.com
IR Security & Safety Electronic Access Control • 575 Birch Street • Forestville, CT 06010
IR Security & Safety

LOCKNETICS® by SCHLAGE

MagForce™ 350+ Series Electromagnetic Locks

The **High Security Narrowline** Solution

MagForce™ LIFETIME WARRANTY

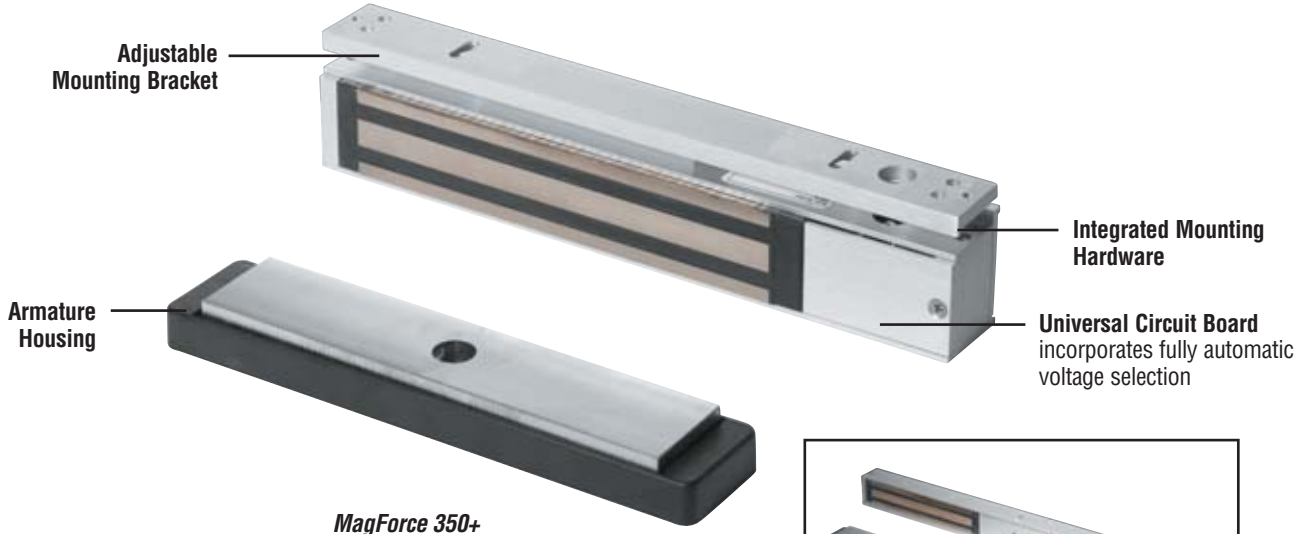

MagForce 350+

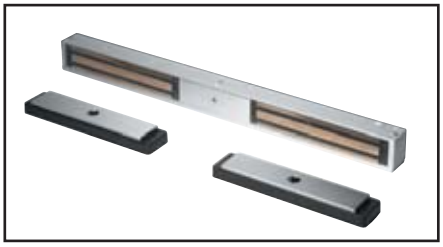

MagForce 352+

New ***Now with Fully Automatic Voltage Selection***

The 350+ Narrowline surface mounted electromagnetic lock is designed for doors requiring a high level of security. The 350+ is available for single, inswinging or outswinging, hollow metal, aluminum, and wood doors and frames and glass doors. The 352+ is available for pairs of hollow metal, aluminum, and wood doors and frames and glass doors without a mullion. The 351+ with split armature is used with pairs of hollow metal, aluminum, and wood doors and frames without a mullion. All models easily interface with electronic access control systems, automatic door operators and fire or other hazard sensing systems for egress and emergency egress. Exceeds ANSI/BHMA A156.23 Grade 2 standards with 1200 pounds of direct holding force and is UL listed as an auxiliary lock for a 3 hour fire rated opening.

Benefits of Using MagForce 350+ Series

- *Modular design employs a standardized circuit board with easy to install connectors, adjustable mounting brackets, integrated mounting screws, and slide-in architectural finish plates*
- *The 350+ design features a narrow 2-1/8" projection from the frame header*
- *The armature housing holds the armature in place, eliminating the noise and sagging known with armatures, and increases the overall reliability of the product*
- *The armature housing also provides an aesthetically pleasing look over traditional armature mountings, blending into the surrounding environment more easily*
- *The armature housing holds the magnets for the DSM option without having to mount an additional plate to the armature, ensuring quicker, more reliable installations*

1200 lbs. Holding Force

MADE IN USA

c UL us

BHMA CERTIFIED

CSFM MEA 14-95-6

LOCKNETICS® by SCHLAGE

MagForce™ 350+ Series Electromagnetic Locks

The **High Security Narrowline** Solution

How To Order MagForce 350+

350+ – RTD – 335 – RTD

- **Select Model**
- **Select Options**
- **Select Finish**
- **Select Accessories**

1. Select Model

350+	Narrowline – Single lock
351+	Narrowline with Split Armature
352+	Narrowline – Double Lock
350+ DSM/MBS	Single Lock with Door Status Monitor/ Magnetic Bond Sensor
352+ DSM/MBS	Double Lock with Door Status Monitor/ Magnetic Bond Sensor

2. Select Options/Accessories

RTD/RTD2	Relocking Time Delay	
ATS/ATS2	Anti-tamper Switch	
HDB*	Herculite Door Bracket	
	Single	HDB50
	Double	HDB52
L1/L2**	LED indicator	
RCP/RCP2	Voltage Rectifier	
TJ	Top Jamb for inswing door	
	Single	TJ50
	Double	TJ52
	Split	TJ51
CLH	Custom Length Housing (Factory cut)	
	Horizontal Single	CLH50-3
	Horizontal Double	CLH52-4
	Vertical Single	CLH50-5
	Vertical Double	CLH52-6
VLH	Variable Length Housing (Field Cut)	
	Horizontal Single	VLH50-3
	Horizontal Double	VLH52-4
	Vertical Single	VLH50-5
	Vertical Double	VLH52-6

* DSM/MBS/HBD option not available for 351+ models

** L1/L2 only available on DSM/MBS models, not available for TJ applications

3. Select Finish

628	US28	Satin Aluminum, Anodized ***(standard)***
335	US19	Satin Black, Anodized
612B	US10	Satin Bronze
612SF	US10	Satin Bronze-SF
613SF	US10B	Dark Satin Bronze, Anodized
628B	US28	Satin Aluminum, w/ Black
666B	US3	Bright Brass
666SF	US3	Bright Brass-SF
672B	US26	Bright Chrome
672SF	US26	Bright Chrome-SF

Armature housing finish standard Lexan black

B suffix – Satin black anodized 335/US19 housing with choice of select special finish for slide plates only

SF suffix – Special finish for all metal surfaces

Specifications:

350+

Holding Force: 1200 lbs. per door leaf
Input Voltage: 12/24 VDC
Current Draw: .75A@12VDC
.38A@24VDC
Height: $2^{1}/_{8}$"
Length: $12^{1}/_{2}$"
Width: $1^{11}/_{16}$"
Weight: 9.60 lbs

351+

Holding Force: 500 lbs. per door leaf
Input Voltage: 12/24 VDC
Current Draw: .75A@12VDC
.38A@24VDC
Height: $2^{1}/_{8}$"
Length: $12^{1}/_{2}$"
Width: $1^{11}/_{16}$"
Weight: 9.60 lbs

352+

Holding Force: 1200 lbs. per door leaf
Input Voltage: 12/24 VDC
Current Draw: 1.5A@12VDC
.76A@24VDC
Height: $2^{1}/_{8}$"
Length: 25"
Width: $1^{11}/_{16}$"
Weight: 17.80 lbs

Questions? Call: 866-322-1237 • FAX: 866-322-1233 • Visit us on the Internet at www.locknetics.com
IR Security & Safety Electronic Access Control • 575 Birch Street • Forestville, CT 06010
IR Security & Safety

LOCKNETICS® by SCHLAGE

MagForce™ 320+ Series Electromagnetic Locks

The **High Security Traffic Control** Solution

MagForce™ LIFETIME WARRANTY

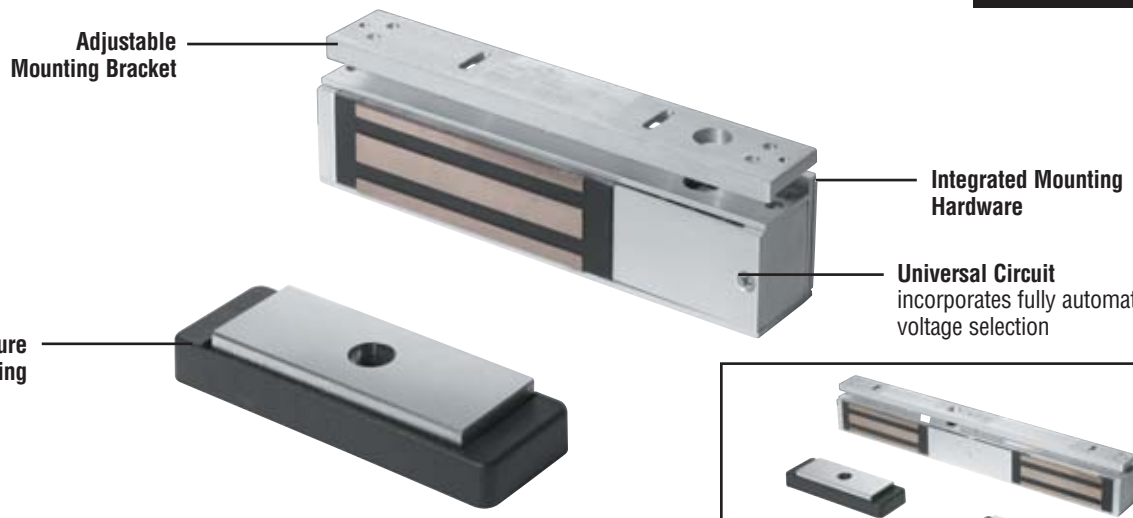

MagForce 320+

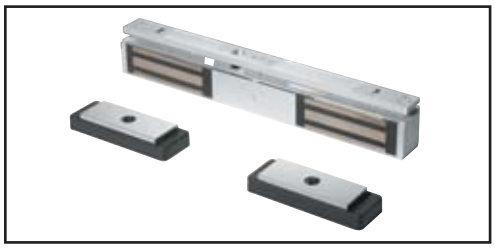

MagForce 322+ Double

New ***Now with Fully Automatic Voltage Selection***

The 320+ surface mounted electromagnetic lock offers 700 for interior doors and general traffic control applications. Its modular design employs a standardized circuit board with easy to install connectors, adjustable mounting brackets, integrated mounting screws, and slide-in architectural finish plates. The armature housing holds the armature in place, eliminating the noise and sagging known with armatures and increasing the overall reliability of the product. The armature housing also provides an aesthetically pleasing look over traditional armature mountings, blending into the surrounding environment more easily. Finally the armature housing holds the magnet for the DSM option without having to mount an additional plate to the armature, ensuring quicker, more reliable installations.

The 320+ is available for single, inswinging or outswinging, hollow metal, aluminum, and wood doors and frames and glass doors. The 322+ is available for pairs of hollow metal, aluminum, and wood doors and frames and glass doors without a mullion. All models easily interface with electronic access control systems, automatic door operators and fire or other hazard sensing systems for egress and emergency egress.

The 320+ exceeds ANSI/BHMA A156.23 Grade 3 standards with 700 pounds of direct holding force and is UL listed as an auxiliary lock for a 3 hour fire rated opening.

Benefits of Using MagForce 320+

- *Excellent choice for interior high security applications*
- *Fully Automatic Voltage Selection simplifies installation*
- *Modular design employs a standardized circuit board with easy to install connectors, adjustable mounting brackets, integrated mounting screws, and slide-in architectural finish plates*
- *The uniquely designed armature housing holds the armature in place, eliminating the noise and sagging possible with other armatures*
- *The armature housing increases the overall reliability of the product and provides an aesthetically pleasing look over traditional armature mountings, blending into the surrounding environment more easily*
- *The armature housing holds the magnet for the DSM option without having to mount an additional plate to the armature, ensuring quicker, more reliable installation*

700 lbs. Holding Force

MADE IN USA

c UL us

BHMA CERTIFIED

CSFM MEA 14-95-6

LOCKNETICS® by SCHLAGE

MagForce™ 320+ Series Electromagnetic Locks

The **High Security Traffic Control** Solution

How To Order MagForce 320+

320+ – RTD – 612 – RCP

- **Select Model**
- **Select Options**
- **Select Finish**
- **Select Accessories**

1. Select Model

320+	Traffic Control – Single Lock
322+	Traffic Control – Double Lock
320+ DSM/MBS	Single Lock with Door Status Monitor/ Magnetic Bond Sensor
322+ DSM/MBS	Double Lock with Door Status Monitor/ Magnetic Bond Sensor

2. Select Options/Accessories

RTD/RTD2	Relocking Time Delay	
ATS/ATS2	Anti-tamper Switch	
HDB	Herculite Door Bracket	
	Single	HDB20
	Double	HDB22
L1/L2**	LED indicator	
RCP/RCP2	Voltage Rectifier	
TJ	Top Jamb for inswing door	
	Single	TJ20
	Double	TJ22
	Split	N/A
CLH	Custom Length Housing (Factory cut)	
	Horizontal Single	CLH20-3
	Horizontal Double	CLH22-4
	Vertical Single	CLH20-5
	Vertical Double	CLH22-6
VLH	Variable Length Housing (Field Cut)	
	Horizontal Single	VLH20-3
	Horizontal Double	VLH22-4
	Vertical Single	VLH20-5
	Vertical Double	VLH22-6

** L1/L2 only available on DSM/MBS models, not available for TJ applications

3. Select Finish

628	US28	Satin Aluminum, Anodized ***(standard)***
335	US19	Satin Black, Anodized
612B	US10	Satin Bronze
612SF	US10	Satin Bronze-SF
613SF	US10B	Dark Satin Bronze, Anodized
628B	US28	Satin Aluminum, w/ Black
628W	US28	Satin Aluminum, w/ White
666B	US3	Bright Brass
666SF	US3	Bright Brass-SF
672B	US26	Bright Chrome
672SF	US26	Bright Chrome-SF

Armature housing finish standard Lexan black

B suffix – Satin black anodized 335/US19 housing with choice of select special finish for slide plates only

SF suffix – Special finish for all metal surfaces

Specifications:

320+

Holding force:	700 lbs. per door leaf
Input Voltage:	12/24 VDC
Current Draw:	.75A@12VDC .38A@24VDC
Height:	$2^{1}/_{8}$"
Length:	$8^{9}/_{16}$"
Width:	$1^{11}/_{16}$"
Weight:	5.60 lbs

322+

Holding force:	700 lbs. per door leaf
Input Voltage:	12/24 VDC
Current Draw:	1.5A@12VDC .76A@24VDC
Height:	$2^{1}/_{8}$"
Length:	$16^{3}/_{4}$"
Width:	$1^{11}/_{16}$"
Weight:	10.60 lbs

Questions? Call: 866-322-1237 • FAX: 866-322-1233 • Visit us on the Internet at www.locknetics.com
IR Security & Safety Electronic Access Control • 575 Birch Street • Forestville, CT 06010

IR Security & Safety