LOCKNETICS® by SCHLAGE

320M Series MiniLine™ Electromagnetic Locks

Special Application Solution

MagForce™ LIFETIME WARRANTY

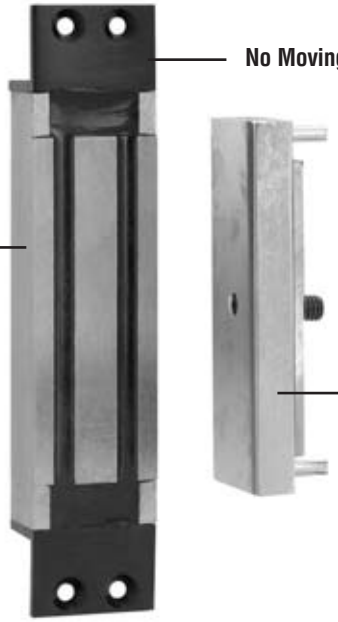

NOTE: Due to the higher ambient operating temperature of mortise wood framed application, it is **REQUIRED** that the 12V/0.225 AMP configuration be used.

Locknetics provides the industry's most complete selection of electromagnetic locks. The 320M Series MiniLine of speciality electromagnetic locks include the 320M mortise mounted system. The 320M Series is designed to interface with electronic access control systems, automatic door operators, and fire or hazard sensing systems, to provide egress upon detectable emergency. With no moving parts and a fail safe design, it offers an excellent solution for both security and life safety requirements when connected to the fire alarm circuit.

The 320M Series has been installed on thousands of worldwide installations including airports, hospitals, nursing homes, schools, universities, libraries, museums, retail and office buildings, laboratories, and government installations.

The 320M Series MiniLine is UL listed and engineered to meet the ANSI/BHMA standard for electromagnetic locks.

Benefits of Using 320 M Series

- *Mortise mount for sliding doors*
- *Includes mounting tabs and armature mounting block*
- *Low maintenance - No moving parts*
- *Meets Security and Life Safety requirements*
- *Fields Selectable 12 or 24 VDC operation*

500 to 650 lbs. Holding Force

MADE IN USA

C UL R12092

CSFM MEA 14-95-6

LOCKNETICS® by SCHLAGE

320M Series MiniLine Electromagnetic Locks

Special Application Solution

How To Order 320 M Series

320M – DSM/MBS

Select Model
Select Options

1. Select Model

320M	Mortise Mount - Sliding Doors Includes lock mounting tabs. 12/24 VDC Single

2. Select Options

ATD	Adjustable Time Delay
DSM	Door Status Monitor
MBS	Magnetic Bond Sensor
DSM/MBS	Door Status Monitor/Magnetic Bond Sensor
RCP	Rectifier (for use with AC)

Specifications:

Holding Force:	500 LBS @ 12VDC 650 LBS @ 24 VDC
Input Voltage:	12/24 VDC
Current Draw:	.23A @ 24VDC .45A @ 12VDC
Wiring:	Wire leads 12˝ long
MTG Type:	Concealed
Lock Body	
Length:	7"
Height:	$1^3/_8$"
Depth:	$1^7/_8$"
Armature	
Length:	$4^1/_4$"
Height:	$1^1/_2$"
Depth:	5/8"

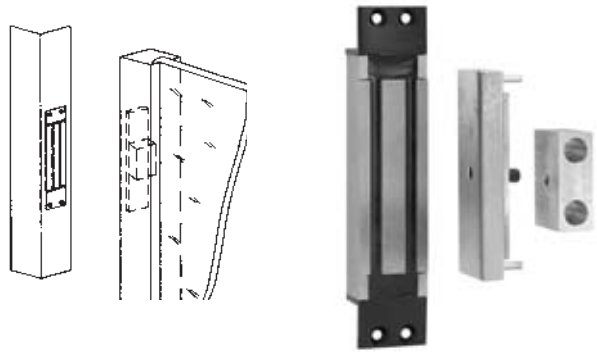

320M Series
For vertical mount in sliding door assemblies

Questions? Call: 866-322-1237 • FAX: 866-322-1233 • Visit us on the Internet at www.locknetics.com
IR Security & Safety Electronic Access Control • 575 Birch Street • Forestville, CT 06010

LOCKNETICS® by SCHLAGE

390G+ Series Electromagnetic Gate Lock

Special Application Lock Solution

MagForce™ LIFETIME WARRANTY

The 390G+ Gate Lock is a weather resistant electromagnetic lock with 1500 lbs. of holding force. It is designed for use on all types of sliding and swinging gates. As a high security magnetic lock it can accommodate misalignment problems while supplying superior holding force.

A 1/2˝ compression connector is provided for installation of 1/2˝ EMT conduit, insuring protection of hook-up wiring from weather and vandalism. Heavy duty plating resists corrosion of mating surfaces providing a low maintenance locking device.

A modified Top Jamb mounting bracket allows a single Model 390G+ to be mounted in a variety of positions. The 390G+ Gate Lock may be mounted to any gate frame or post. Special brackets may be required to adapt the lock to a particular frame or post. It is important that the lock is mounted so that the armature pulls straight back from the magnet face.

The 390G+ can be field configured for either 12 or 24 VDC operation. An optional lock status switch (MBS) and gate status switch (DSM) is available.

Benefits of Using 390G+ Series Gate Lock

- *1500 lbs. of direct holding force*
- *Field Selectable 12 or 24VDC operation*
- *Electroless nickel plated finish*
- *Universal mounting bracket*
- *1/2˝ EMT compression fitting*
- *Two foot wire leads*
- *Built-in voltage spike suppressor*
- *Weather resistant for exterior use*
- *Accommodates gate misalignment*
- *No moving parts - low maintenance*
- *Includes universal mounting brackets*

1500 lbs. Holding Force

MADE IN USA

LOCKNETICS® by SCHLAGE

390G+ Series Electromagnetic Gate Lock

Special Application Lock Solution

How to Order 390+ Series Gate Lock

390G+ – DSM/MBS

Select Lock
Select Options

1. Select Model

390G+	Gate Lock

2. Select Options

DSM/MBS	Door Status Monitor/Magnetic Band Sensor
DSM	Door Status Monitor
MBS	Magnetic Bond Sensor

Specifications:

Holding Force: 1500 lbs.
Input Voltage: 12/24 VDC
Current Draw: .67 A @ 12VDC
.34 A @ 24VDC

Lock Body:
Length: 9"
Height: $2\frac{1}{2}$"
Depth: $1\frac{1}{4}$"

Armature:
Length: $7\frac{3}{8}$"
Height: $2\frac{5}{16}$"
Depth: $1\frac{9}{32}$"

Conduit fitting 1/2" compression fitting for 1/2" EMT conduit mounting brackets

Mounting Concepts

Swinging Gate

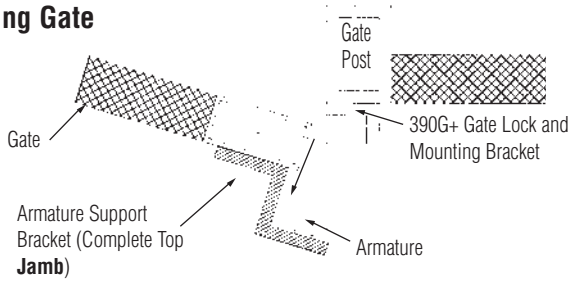

Sliding Gate

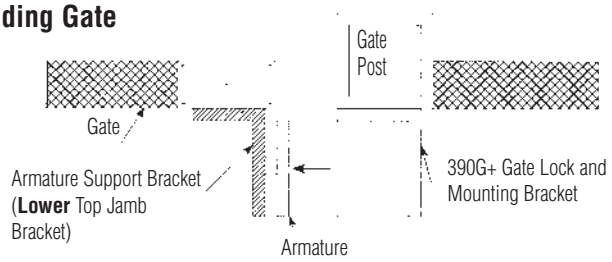

Mounting Brackets

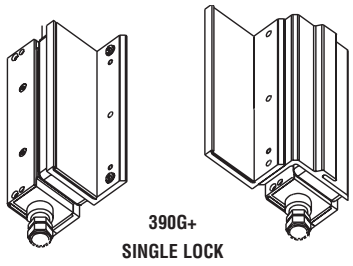

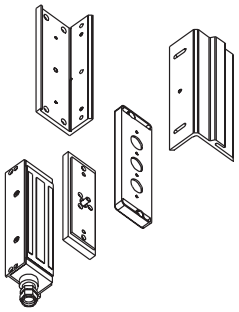

Questions? Call: 866-322-1237 • FAX: 866-322-1233 • Visit us on the Internet at www.locknetics.com
IR Security & Safety Electronic Access Control • 575 Birch Street • Forestville, CT 06010

IR Security & Safety