SCHLAGE®

B260 Deadbolts

Schlage B260 Series Deadbolts

B260 Series deadbolts on all outside doors help maximize home security. Schlage B260 Series deadbolts meet or exceeds ANSI Grade 2 standards.

DEADBOLT B260

DEADBOLT B262

DEADBOLT B260

Ultima™ Lifetime Anti-Tarnish Finish

Will not corrode, discolor or tarnish for a lifetime!
Eliminates Tarnish & Corrosion Caused By:
Sun - Salt Air - Fog

Exclusive Hands-Free Installation Clip for quick snap-together assembly

Solid 1″ Long-Bolt with hardened-steel inner-core resists cutting

Versatile Latch Design adjusts to fit most doors

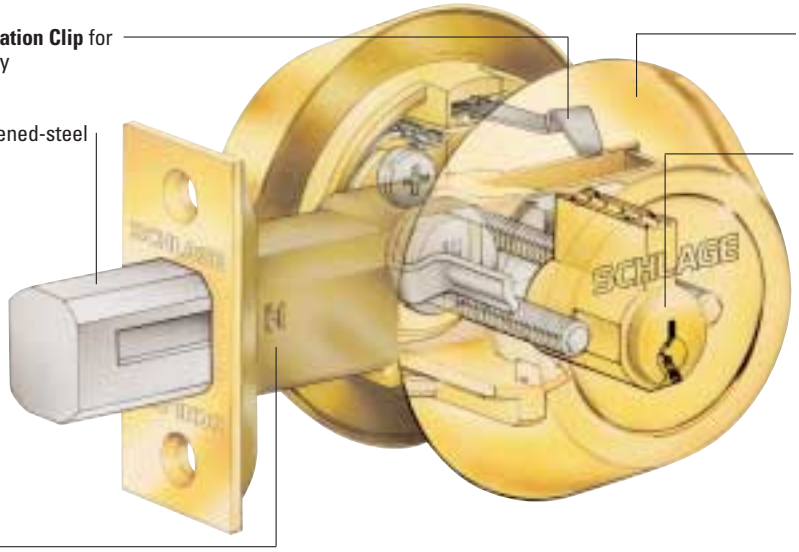

Massive Interlocking Chassis acts as a strong anti-pry barrier

Precision Engineered Keyed Cylinder protects against picking and prying

Only 3 Major Parts to snap together for quick-and-easy installation

You Can Never Have Too Much Security.

Visit The Schlage SECURITY ZONE At: **www.schlagelock.com**

Features

B260 Series - Deadbolts

- **ANSI Grade 2 Security**
- **Ultima Lifetime Anti-Tarnish Finish Warranty**
- **Hands Free Installation**
- **1″ Deadbolt With Hardened Steel Core**
- **3″ Screws With Steel Door Frame Reinforcer**
- **Pick Resistant Spool Pins**
- **Adjustable Latch**
- **Nickel Silver Keys and Pins**
- **Triple Option® Face Plates**

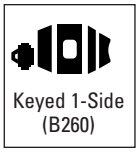
Keyed 1-Side (B260)

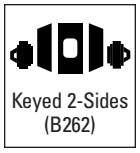
Keyed 2-Sides (B262)

Product Line

Product No.	UPC #	Product Description
B260N 505	992089	Keyed 1-Side Deadbolt, Ultima™ Bright Brass
B262N 505	992126	Keyed 2-Sides Deadbolt, Ultima™ Bright Brass
B260N 609	992096	Keyed 1-Side Deadbolt, Antique Brass
B262N 609	992133	Keyed 2-Sides Deadbolt, Antique Brass
B260N 626	992102	Keyed 1-Side Deadbolt, Satin Chrome
B262N 626	992140	Keyed 2-Sides Deadbolt, Satin Chrome

Merchandising

Now there's new and easy ways to promote Schlage locks just about anywhere in your store! These eye-catching corrugated merchandisers are easy to assemble and designed to drive additional sales in any aisle. For more information contact your Schlage Account Manager.

MR-515A

Graphic/Signage Pack

2 ft. graphic sign showing knob and deadbolt features. For use with MR-505 or MR-878.

24″ W x 9″H

MR-846A

Knob/Deadbolt Vertical Sign

For pegged environments and areas where a header can not be used. 2-sided with F-Series Knob and B260 Series Deadbolt product features and benefits. For use with MR-350 or MR-351.

8″ W x 30″H

© Schlage 2000 • Printed in the U.S.A.