SCHLAGE®

Residential Knobs

Schlage Residential Knobs

Schlage residential knobs feature solid brass trim and all metal parts, nickel silver keys and pins, and are precision built to meet and exceed ANSI Grade 2 standards.

Ultima™ Lifetime Anti-Tarnish Finish

*Will not corrode, discolor or tarnish for a lifetime!**
Eliminates Tarnish & Corrosion Caused By: Sun - Salt Air - Fog
**Exterior products only*

PLYMOUTH

GEORGIAN

ORBIT

BELL

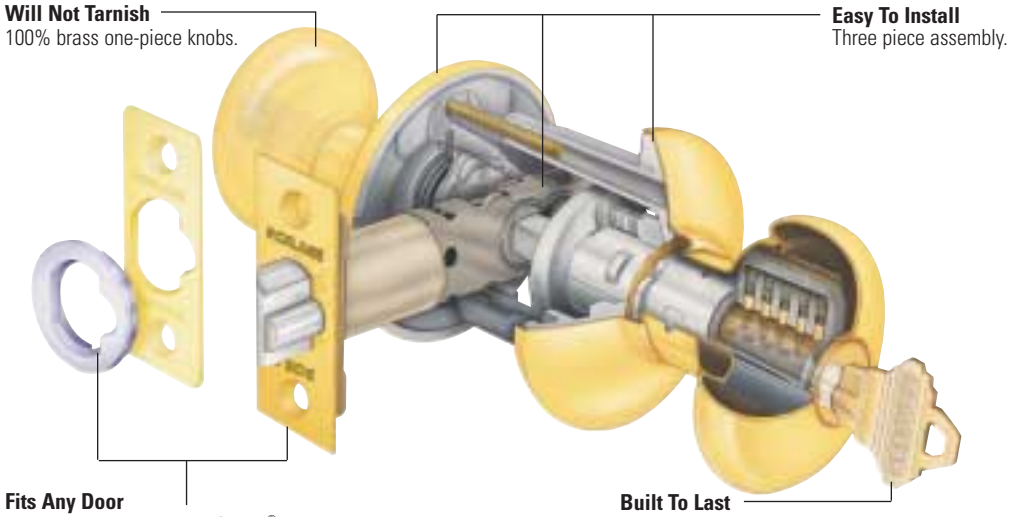

You Can Never Have Too Much Security.

Visit The Schlage SECURITY ZONE At: **www.schlagelock.com**

SCHLAGE®

Features

F Series - Knobs

- **Meets ANSI Grade 2 Standards**
- **Ultima Lifetime Anti-Tarnish Warranty on Exterior Products**
- **Universal Latch Fits All Doors**
- **Nickel Silver Keys and Pins.** For long-lasting operation
- **Solid Brass Knobs and Roses.** Precision built for durability
- **Emergency Exit Feature.** No unlocking required for panic exit
- **One Piece Knob.** For best appearance and security
- **Three Piece Assembly.** For fast, easy installation

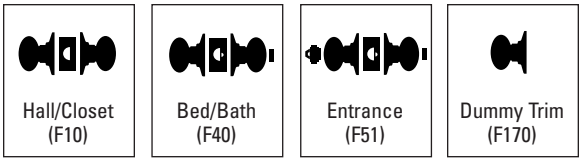

Product Line

Product No.	UPC #	Product Description
F10 BELV 605	961139	Bell Knob, Hall & Closet, Bright Brass
F10 BELV 609	961146	Bell Knob, Hall & Closet, Antique Brass
F10 BELV 626	961153	Bell Knob, Hall & Closet, Satin Chrome
F40 BELV 605	961092	Bell Knob, Bed & Bath, Bright Brass
F40 BELV 605 x 625	961122	Bell Knob, Bed & Bath, Bright Brass x Bright Chrome
F40 BELV 609	961108	Bell Knob, Bed & Bath, Antique Brass
F40 BELV 626	961115	Bell Knob, Bed & Bath, Satin Chrome
F51 BELV 505	991044	Bell Knob, Keyed Entry, Bright Brass
F51 BELV 609	961061	Bell Knob, Keyed Entry, Antique Brass
F51 BELV 626	961085	Bell Knob, Keyed Entry, Satin Chrome
F170 BELV 605	961160	Bell Knob, Dummy, Bright Brass
F170 BELV 609	961117	Bell Knob, Dummy, Antique Brass
F10 GEOV 605	961245	Georgian Knob, Hall & Closet, Bright Brass
F10 GEOV 609	961252	Georgian Knob, Hall & Closet, Antique Brass
F40 GEOV 605	961221	Georgian Knob, Bed & Bath, Bright Brass
F40 GEOV 609	961238	Georgian Knob, Bed & Bath, Antique Brass
F51 GEOV 505	990665	Georgian Knob, Keyed Entry, Bright Brass
F51 GEOV 609	961214	Georgian Knob, Keyed Entry, Antique Brass
F51 GEOV 605 x FLA 605 LH	961504	Georgian Knob, Keyed Entry, Bright Brass x Flair Lever, Bright Brass, Left Hand
F51 GEOV 605 x FLA 605 RH	961511	Georgian Knob, Keyed Entry, Bright Brass x Flair Lever, Bright Brass, Right Hand
F170 GEOV 605	961269	Georgian Knob, Dummy, Bright Brass
F170 GEOV 609	961276	Georgian Knob, Dummy, Antique Brass
F10 ORBV 605	961405	Orbit Knob, Hall & Closet, Bright Brass
F40 ORBV 605	961382	Orbit Knob, Bed & Bath, Bright Brass
F51 ORBV 505	991068	Orbit Knob, Keyed Entry, Bright Brass
F170 ORBV 605	961429	Orbit Knob, Dummy, Bright Brass
F10 PLYV 605	961320	Plymouth Knob, Hall & Closet, Bright Brass
F40 PLYV 605	961306	Plymouth Knob, Bed Bath, Bright Brass
F40 PLYV 605 x 625	961313	Plymouth Knob, Bed Bath, Bright Brass x Bright Chrome
F51 PLYV 505	989065	Plymouth Knob, Keyed Entry, Bright Brass
F51 PLYV 605 x FLA 605 LH	961474	Plymouth Knob, Keyed Entry, Bright Brass x Flair Lever, Bright Brass, Left Hand
F51 PLYV 605 x FLA 605 RH	961450	Plymouth Knob, Keyed Entry, Bright Brass x Flair Lever, Bright Brass, Right Hand
F51 PLYV 605 x JAZ 605	961702	Plymouth Knob, Keyed Entry, Bright Brass x Jazz Lever, Bright Brass
F170 PLYV 605	961337	Plymouth Knob, Dummy, Bright Brass

Merchandising

Now there's new and easy ways to promote Schlage locks just about anywhere in your store! These eye-catching corrugated merchandisers are easy to assemble and designed to drive additional sales in any aisle. For more information contact your Schlage Account Manager.

MR-846A
Knob/ Deadbolt Vertical Sign

For pegged environments and areas where a header can not be used. 2-sided with F-Series Knob and B-Series Deadbolt product features and benefits. For use with MR-350 or MR-351.

8˝W x 30˝ D

MR-515A
Graphic/Signage Pack

Two 2 ft. signs showing knob and deadbolt features. For use with MR-505 or MR-878.

24˝W x 9˝ D

SCHLAGE® Security & Safety Products
An Ingersoll-Rand Company
MR-982-G 03/00

WWW.SCHLAGELOCK.COM

© Schlage 2000 • Printed in the U.S.A.