SARGENT®

Signature Series

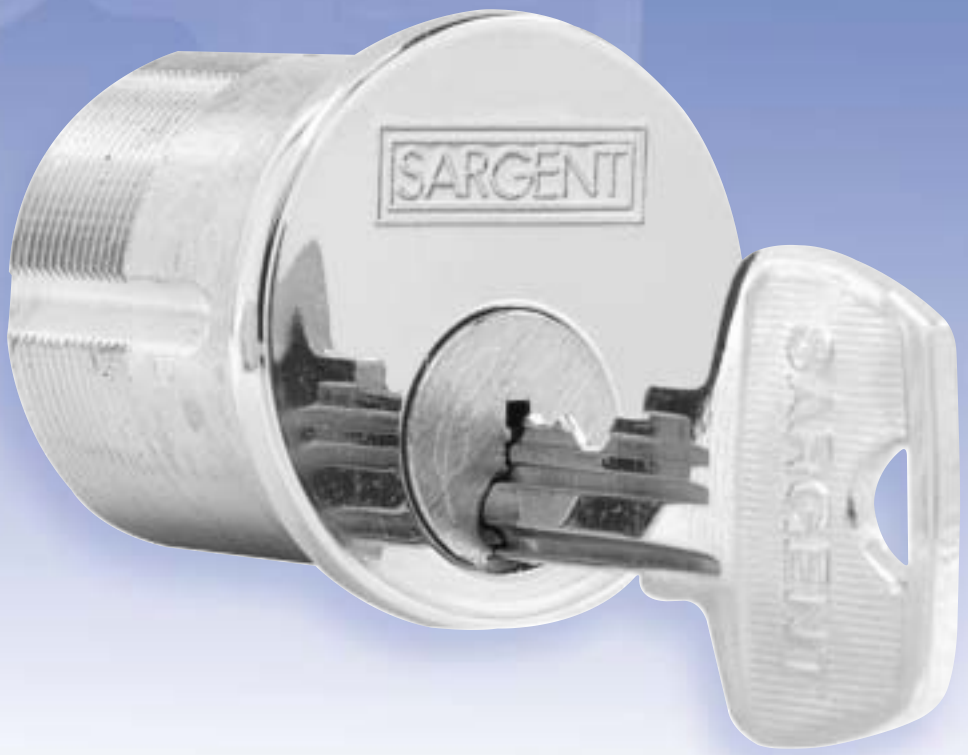

An ASSA ABLOY Group company

ASSA ABLOY

SARGENT
1-800-727-5477
www.sargentlock.com

Table of Contents

	Page
Components	1
Mortise/Rim	2
Bored Locks	3
Removable Core/Padlocks	4
Key Blanks	5
Keyway Control Comparison	6
Construction Master Keying	7
Forms	8
Features	9

Policy

The SARGENT® Signature* patented cylinders and keys are available through the normal channels of distribution.

Assignment of unique SARGENT Signature patterns must be pre-approved by the factory.

A letter requesting a SARGENT Code Pattern Registration Form must be sent to the Key Records Department in New Haven CT.

Signature patterns will be issued by predefined geographical boundaries and assigned in accordance with a standard factory policy.

A letter of authorization under the letterhead of the End-User must accompany any purchase orders for any products which involve SARGENT's Signature cylinders and or keys.

SARGENT Signature patterns are assigned at the End-User level.

*U.S. Patent No. 5,475,998

Signature Series Components

SARGENT
1-800-727-5477
www.sargentlock.com

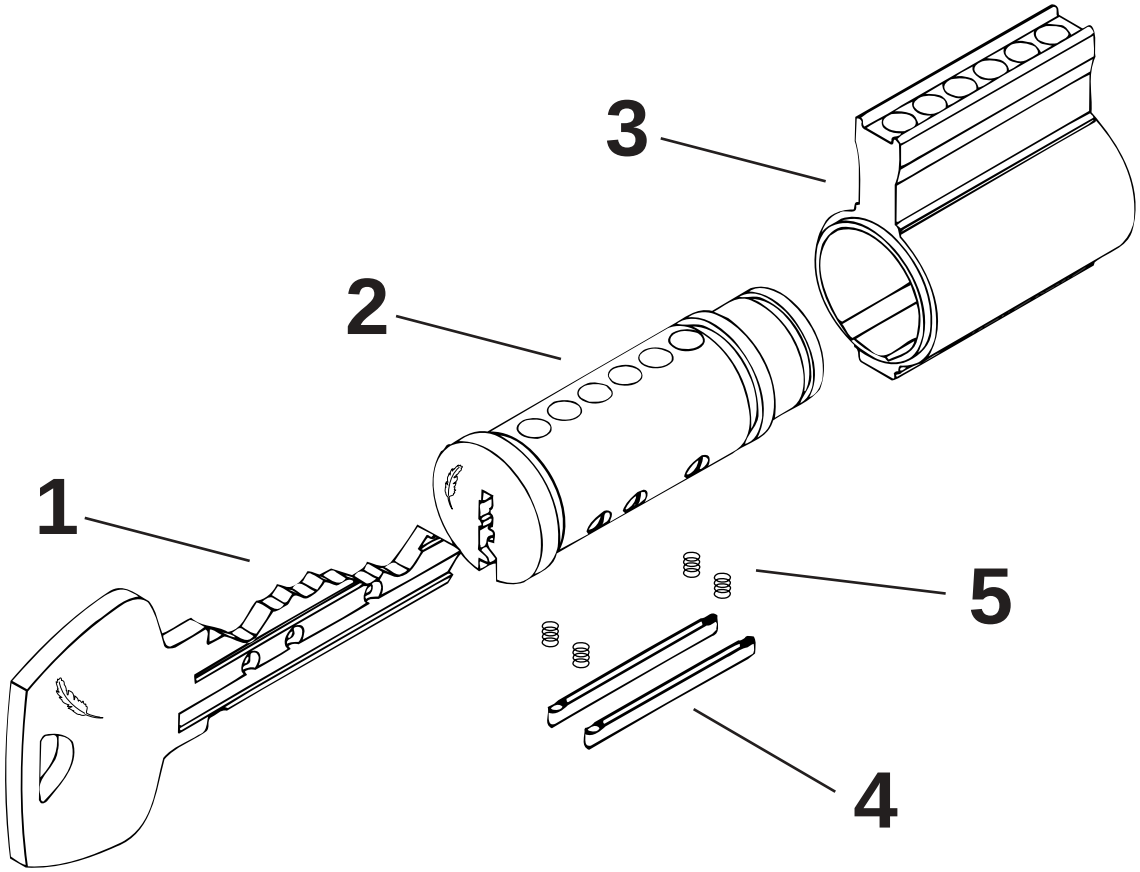

Key Blank

1 Standard key bitting can be accomplished in the field with any industry standard duplicating or code cutting machine.

Signature Barrel (Plug)

2 Unique Signature pattern code pins factory loaded. Field servicing not required.

Signature Body

3 Grooved to function with offset blocking bar assemblies.

Signature Offset Blocking Bar

4 **(2) Two per cylinder.**
Locks out all but a correctly dimpled and bitted key.

Signature Offset Blocking Bar Springs

5 **(4) Four per cylinder.**
Two per offset Blocking Bar. Supplies required spring force to prevent compromise of offset blocking bars by anything other than a correctly dimpled and bitted key.

SARGENT
1-800-727-5477
www.sargentlock.com

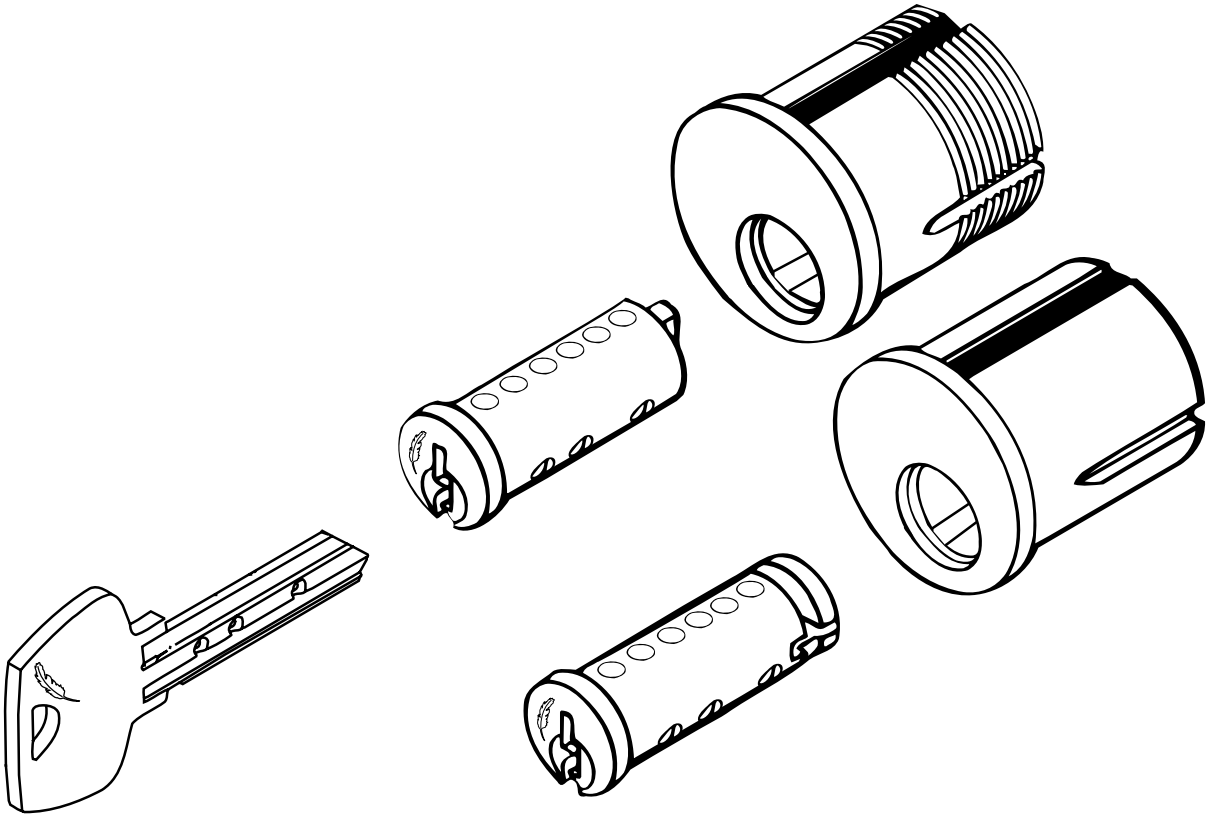

Mortise/Rim Cylinders

	Complete 6 Pin Assembly	Barrel	Body & Slide Assembly
40 Series* Cylinder	10-41	13-3835	13-3726
	10-42	13-3836	13-3727
	10-43	13-3837	13-3728
	10-44	13-3838	13-3729
	10-46	13-3839	13-3730
	10-48	13-3840	13-3731
	10-50	13-3841	13-3732
	10-52	13-3842	13-3733
	10-54	13-3843	13-3734
	10-56	13-3844	13-3735
Rim Cylinder*	10-34 6-Pin	13-3845	13-3847

* When cylinders are ordered (without hardware) they are packed with #97 rossette as standard. Others available, consult Cylinders and Components catalog.

Cams for use with 40 Series

13-0512	Adams Rite (1850)
13-0513	Adams Rite (4070)
13-0928	Schlage L
13-0660	SARGENT Standard
01-1121	Screw (2 required)

Note: Parts on this page reflect only those that are unique to the Signature feature. For all other cylinder components, refer to the standard cylinder section.

Available in UL 437

SARGENT
1-800-727-5477
www.sargentlock.com

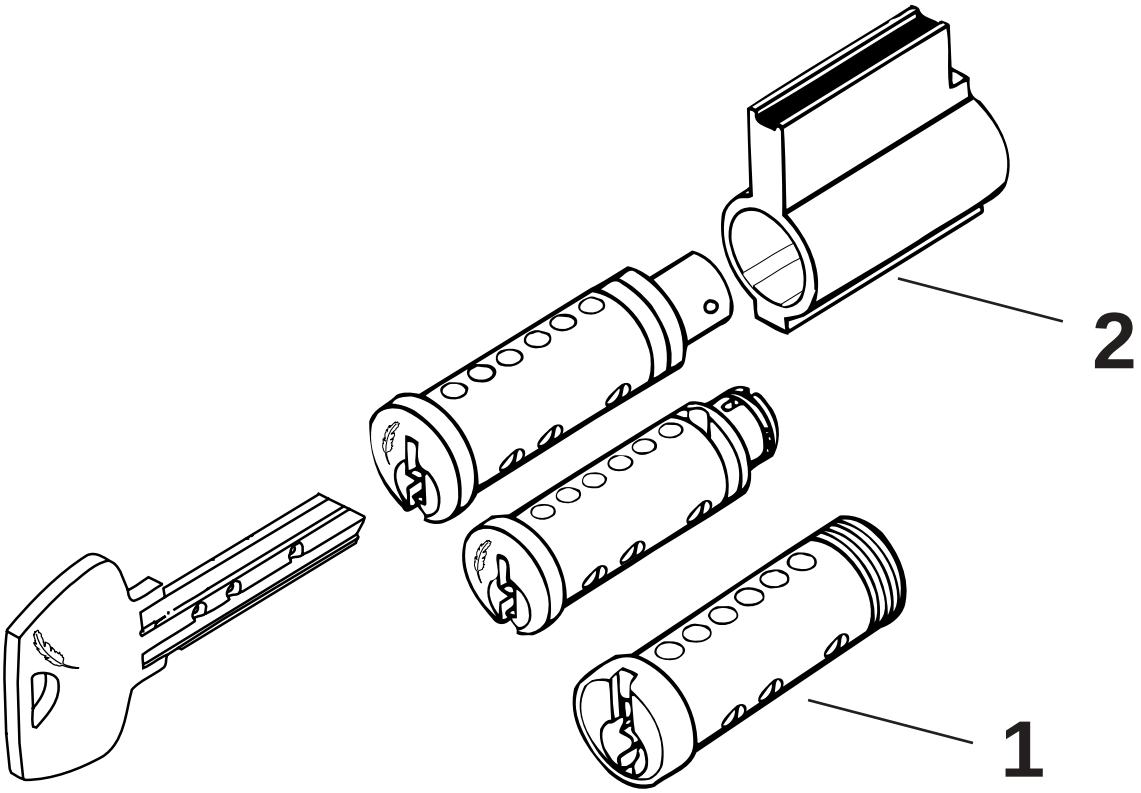

Bored Locks

Functions	Lockset	Assembly	Barrel #1	Body & Slide Assembly #2
All except 50 function	11 Line	13-4147	13-3851	13-3710
All except 50 function	10, 8L, 7 Lever, 6500	13-3713	13-3851	13-3710
All except 50 function	9, 8	13-3827	13-3850	13-3852
All except 50 function	6 “S”,”N”	13-3814	13-3851	13-3853
All except 50 function	6 “B”	13-3815	13-3851	13-3853

Auxiliary Locks (Deadbolts)

Lockset	Assembly	Barrel #1	Body #2
484	13-3857	13-3849	13-3855
485,487	13-3858	13-3849	13-3855
486	13-3859	13-3849	13-3855
464/474	13-3861	13-3849	13-3854
465/475	13-3862	13-3849	13-3854

Note: Parts on this page reflect only those that are unique to the Signature feature. For all other cylinder components, refer to the standard cylinder section.

Not Available in UL 437

For products not listed, contact factory for availability.

SARGENT
1-800-727-5477
www.sargentlock.com

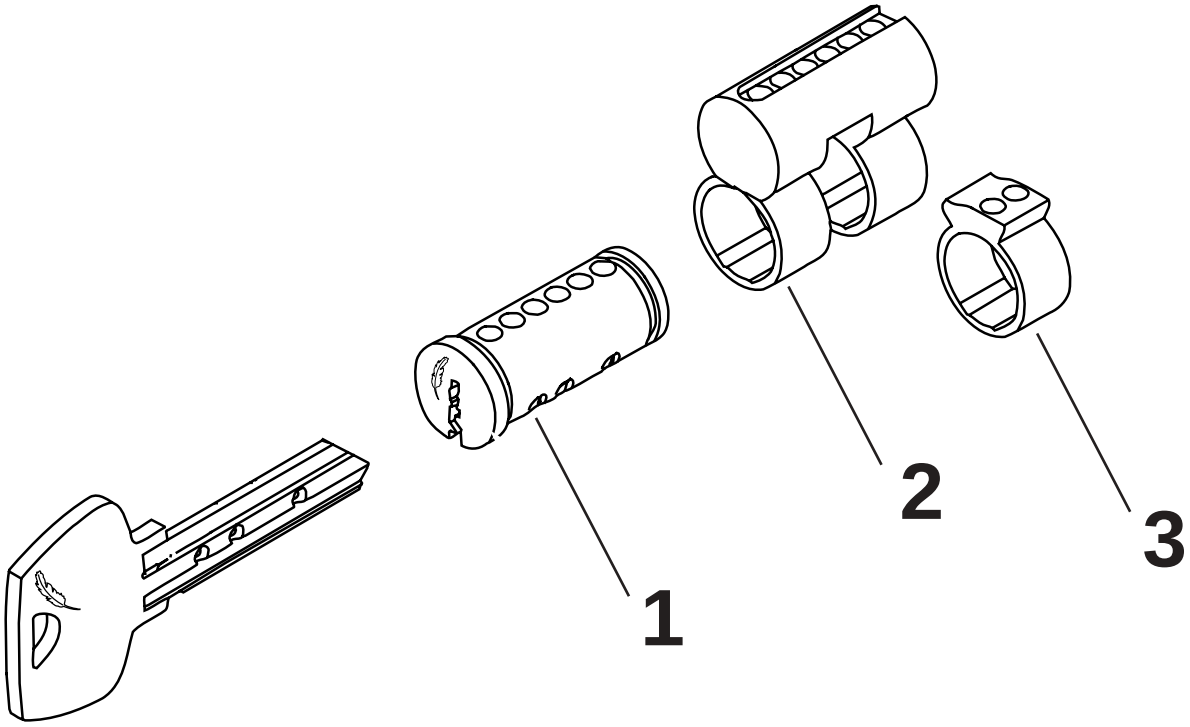

Removable Core 10-6300

Used In	#1 Barrel	#2 Body	#3 Sleeve
10-6334 10-6342 10-6343 10-6344 10-6346	13-0976	13-0977	13-1074

For complete core, order as 10-6300 x finish.

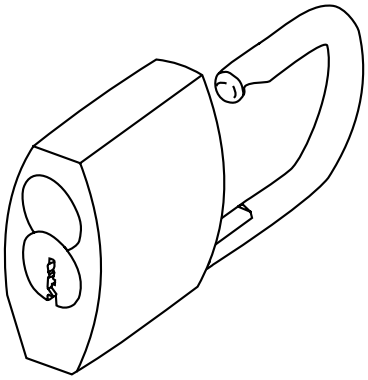

Padlock

	Parts			
Complete Assembly	**#1 Barrel**	**#2 Body Only**	**#3 Sleeve**	**Slide (Not Shown)**
10-63-758 x Shackle	13-0976	13-0977	13-1074	13-0797

Note: Parts on this page reflect only those that are unique to the Signature feature. For all other cylinder components, refer to the standard cylinder section.

Signature Series Key Blanks

SARGENT
1-800-727-5477
www.sargentlock.com

Part Numbers

6 Pin 10-6275 Day Key
10-6270 Master Section

Orders for this type of key blank, must be accompanied by a letter of authorization under the End User's letterhead. This letter must contain the required key section(s) and appropriate authorizers identification.

The Signature Key Blank is offered in two styles. One with the SARGENT Logo embossed on one side and the other side with the Signature Quill Logo, specific Signature code pattern and space for one additional line of stamping. The other is blank on both sides. One side has the Signature Quill Logo, specific Signature code pattern and one additional line for stamping. The other side is blank and available for either a specific die stamp or what ever custom type stamping may be desired.

Two types of Signature featured key blanks are available for specific Keyway (sections) configurations.

The Day Key or single key section, and the Master Keyway sections.

All Signature key blanks are stamped at the factory with the Quill Logo and the individual Signature pattern. The keyway (section) does not appear on any Signature key blank. The Signature key blanks with the End Users unique dimple pattern are available only from SARGENT.

Available Keyways: H, L, R - For other sections call factory.

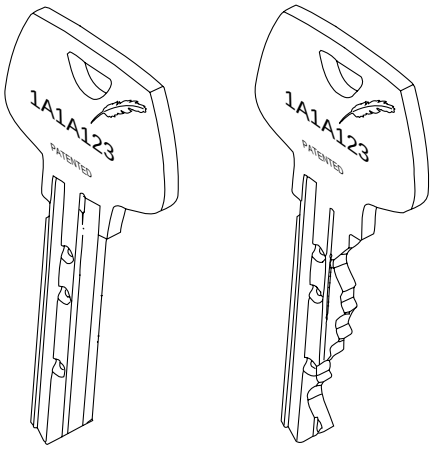

Key bittings can be cut on any industry standard key cutting machine.

Field Service Parts

Part Numbers

Blocking Bar (Old Style)	13-0985
Blocking Bar (New Style)	13-1109
Blocking Bar Spring	13-0986

Blocking Bar packed in quantities of 10

Blocking Bar Spring packed in quantities of 100

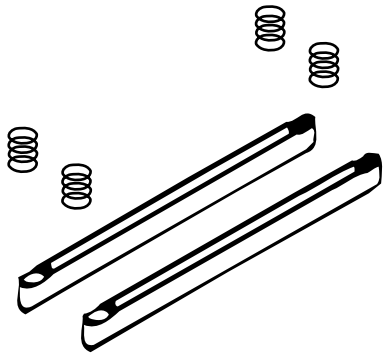

Pinning Kit	Refer to Standard Cylinder Section. Same Kit used to Pin Signature Cylinder. (Removable Core uses the hollow drivers found in Kit 437 RC/UL
Service Tools	Refer to Standard Cylinder Section. No additional service tools required for the Signature Cylinder.

SARGENT
1-800-727-5477
www.sargentlock.com

Signature vs. Standard Keyway Control

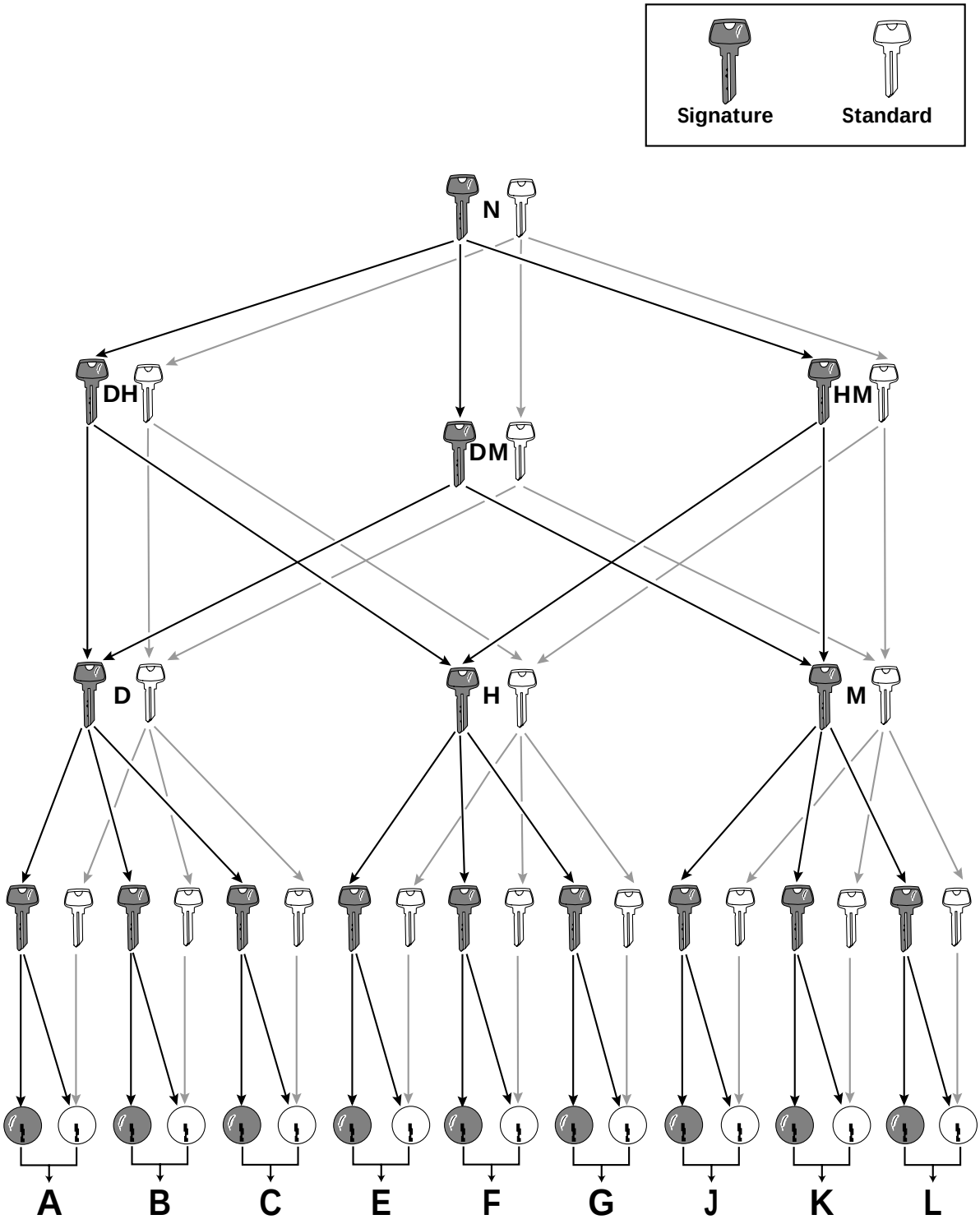

SARGENT
1-800-727-5477
www.sargentlock.com

With construction key in cylinder

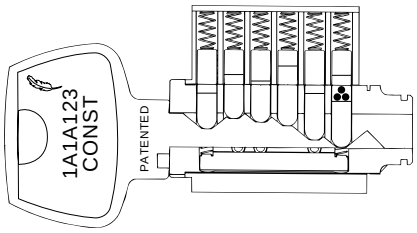

The SARGENT Signature Cylinder will employ what is known in the industry as the "Lost Ball" method of Construction Master Keying. Use the 21- as the prefix when ordering this feature.

NOTE: Adding this feature to an existing SARGENT Master Key system may not be possible. Contact SARGENT if this feature is required in an existing system.

With change key in cylinder

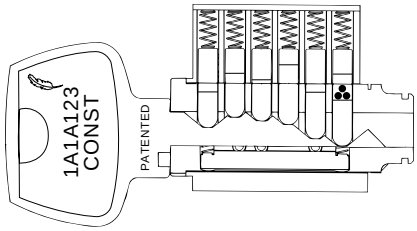

Construction key rotating cylinder plug

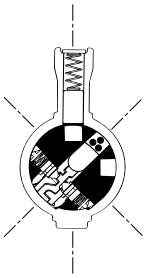

Example shows Lost Ball construction feature in last chamber of cylinder. Construction feature can be used in any chamber.

To void construction key

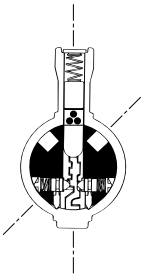

Change key inserted in cylinder.

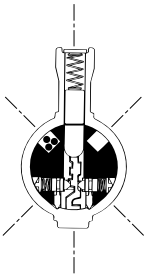

Change key rotated to position for extraction. Construction key now voided from cylinder.

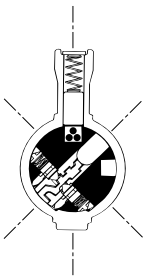

Change key rotating. Construction balls fall into hole in the side of plug.

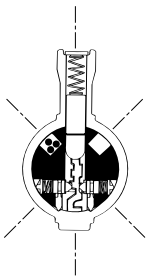

Construction key inserted after balls are trapped. Driver now extends into plug chamber. Construction key will not rotate.

SARGENT
1-800-727-5477
www.sargentlock.com

Signature Code Pattern Registration Form

SARGENT Signature Series
Code Pattern Registration Form

SECTION A Distributor Information

SECTION B Facility Information

SECTION C Area of Exclusivity Final Approval and assignment by Sargent

SECTION D Authorization

FACTORY USE ONLY

The Signature Code Registration Form must be submitted prior to any purchase orders for products.

The information on this form is used by computer software to select the unique Signature code pattern for each key system and monitors the selection process to insure code patterns are not duplicated within the pre-defined area of exclusivity.

Cover Sheet for all Keyed Orders

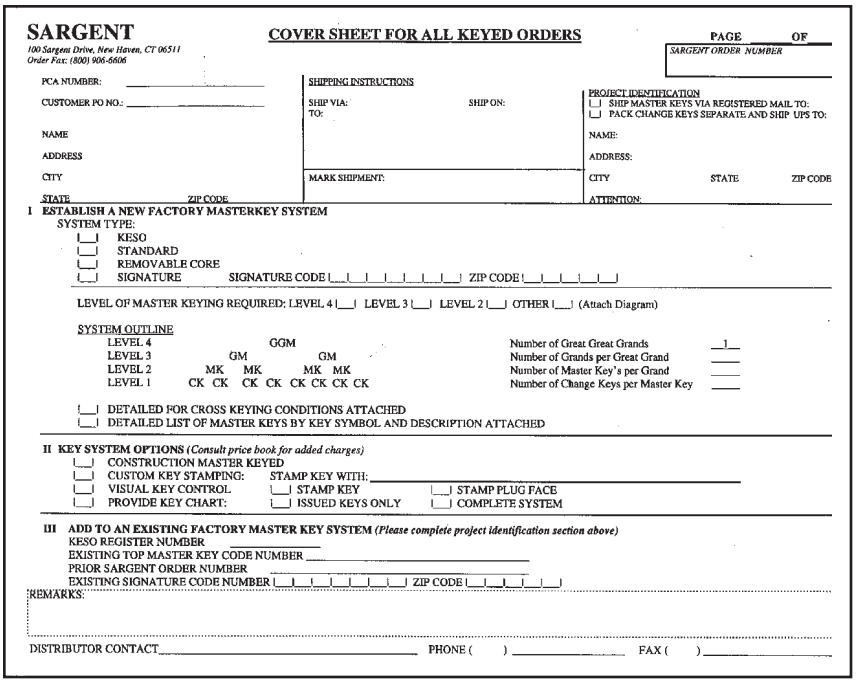

SARGENT
100 Sargent Drive, New Haven, CT 06511
Order Fax: (800) 906-6606

COVER SHEET FOR ALL KEYED ORDERS

PAGE ____ OF ____
SARGENT ORDER NUMBER

PCA NUMBER: _____
CUSTOMER PO NO.: _____
NAME
ADDRESS
CITY
STATE ZIP CODE

SHIPPING INSTRUCTIONS
SHIP VIA: SHIP ON:
TO:
MARK SHIPMENT:

PROJECT IDENTIFICATION
|__| SHIP MASTER KEYS VIA REGISTERED MAIL TO:
|__| PACK CHANGE KEYS SEPARATE AND SHIP UPS TO:
NAME:
ADDRESS:
CITY STATE ZIP CODE
ATTENTION:

I ESTABLISH A NEW FACTORY MASTERKEY SYSTEM
SYSTEM TYPE:
|__| KESO
|__| STANDARD
|__| REMOVABLE CORE
|__| SIGNATURE SIGNATURE CODE |__|__|__|__|__|__|__|__| ZIP CODE |__|__|__|__|__|

LEVEL OF MASTER KEYING REQUIRED: LEVEL 4 |__| LEVEL 3 |__| LEVEL 2 |__| OTHER |__| (Attach Diagram)

SYSTEM OUTLINE
LEVEL 4 GGM
LEVEL 3 GM GM
LEVEL 2 MK MK MK MK
LEVEL 1 CK CK CK CK CK CK CK CK

Number of Great Great Grands __1__
Number of Grands per Great Grand ____
Number of Master Key's per Grand ____
Number of Change Keys per Master Key ____

|__| DETAILED FOR CROSS KEYING CONDITIONS ATTACHED
|__| DETAILED LIST OF MASTER KEYS BY KEY SYMBOL AND DESCRIPTION ATTACHED

II KEY SYSTEM OPTIONS *(Consult price book for added charges)*
|__| CONSTRUCTION MASTER KEYED
|__| CUSTOM KEY STAMPING: STAMP KEY WITH: _____
|__| VISUAL KEY CONTROL |__| STAMP KEY |__| STAMP PLUG FACE
|__| PROVIDE KEY CHART: |__| ISSUED KEYS ONLY |__| COMPLETE SYSTEM

III ADD TO AN EXISTING FACTORY MASTER KEY SYSTEM *(Please complete project identification section above)*
KESO REGISTER NUMBER _____
EXISTING TOP MASTER KEY CODE NUMBER _____
PRIOR SARGENT ORDER NUMBER _____
EXISTING SIGNATURE CODE NUMBER |__|__|__|__|__|__|__|__| ZIP CODE |__|__|__|__|__|
REMARKS:

DISTRIBUTOR CONTACT_____ PHONE ( ) _____ FAX ( ) _____

SARGENT has created a new order lead sheet. This form must accompany any purchase order containing product for the Signature cylinders and keys.

SARGENT recommends that the form accompany any purchase order for master keyed systems.

SARGENT
1-800-727-5477
www.sargentlock.com

How to Order

In order to obtain a unique SARGENT Signature pattern, a pre-authorization form must be sent to SARGENT's Key records department in New Haven, CT. SARGENT will reserve a specific Signature pattern for the particular End User. The Signature feature is assigned to end using facilities.

All purchase orders received by SARGENT for Signature products must be accompanied by a letter of authorization from the End User including his registered Signature pattern and 8 digit pin code.

A new prefix has been created to assist in identifying when a SARGENT product is to include the Signature cylinder feature.

When ordering, use 10- as the prefix to indicate that the product requires the Signature feature. 10-8226 LNL x US26D, 10-10G05 LL x US26D, etc.

If other prefixes are being used, be sure that the Signature prefix appears first, ie; 10-63-10G05, 10-21-8226 x 26D, etc.

Special Features

Visual Key Control

Visual Key Control will incorporate the standard industry key symbol identification. The Visual Key Control feature will appear on the key blank only. Stamping on the face of the barrel is not possible.

Special Key Blank Stamping

The Signature Key Blank is offered in two versions to accommodate a variety of key bow stamping options.

Version one: The key blank has the SARGENT logo embossed on one side. The other side has the Signature Quill Logo, specific Signature code pattern and space for one additional line of stamping.

Version two: The key is blank on both sides. One side has the Signature Quill Logo, specific Signature code pattern and one additional line for stamping. The other side is blank and available for either a specific die stamp or what ever custom type stamping may be desired. The key set symbol will be stamped on the key bow for all contract Master Key system orders.

UL 437 High Security Feature

A UL 437 version is available for mortise and rim cylinders only containing the Signature feature. When ordering, include the prefix "UL". i.e. 10-UL-8226 LNL x US26D.

ESSEX™
THE TOTAL OPENINGS PEOPLE

SARGENT Manufacturing Company • 100 Sargent Drive • P.O. Box 9725 • New Haven • CT 06536-0915
Phone: 800-727-5477 • Fax: 888-863-5054 • Web site: www.sargentlock.com
SARGENT of Canada • Phone: 905-940-2040 • Fax: 905-940-3242 • Web site: www.sargentcanada.ca

Founded in 1864, SARGENT® is a market leader in locksets, cylinders, door closers, exit devices, electro-mechanical products and access control systems for new construction, renovation and replacement applications. The company's customer base includes commercial construction, institutional and industrial markets.

The ASSA ABLOY Group is the world's leading manufacturer and supplier of locking solutions, dedicated to satisfying end-user needs for security, safety and convenience.