SARGENT®

1331 Series Door Closer

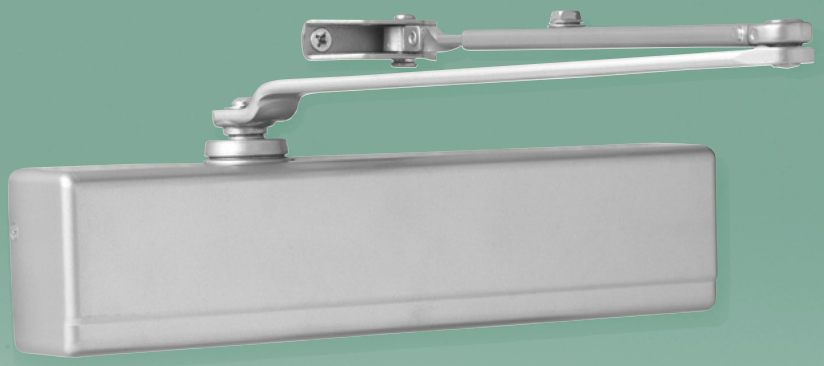

An ASSA ABLOY Group company

ASSA ABLOY

1331 Series Door Closers

SARGENT
1-800-727-5477
www.sargentlock.com

Table of Contents

Features, Benefits & Applications 1
Standard & Parallel Applications 2
Top Jamb Application & Door Closer Operation 3
Accessories & ADA Compliance 4
Architectural Specifications, How To Order & Packing 5

SARGENT® ***Raising the Bar of Excellence!***

On The Cover

- 1331 JO X EN

4/30/04

1331 Series Door Closers
Features, Benefits & Applications

SARGENT
1-800-727-5477
www.sargentlock.com

The SARGENT 1331 Series door closer is a Grade 1 fully adjustable closer suitable for new construction and also ideal for renovations.

Available with a selection of arms and accessories, the 1331 Series door closer can be used for most common applications and is ideal for standard duty installations. Common applications include offices, assisted living facilities, hotel guest rooms, public housing and retail establishments.

For doors that are frequently held open, use either a 1530 or 1540 Series overhead stop or a Power Glide Series door closer with a PSH or CPSH arm.

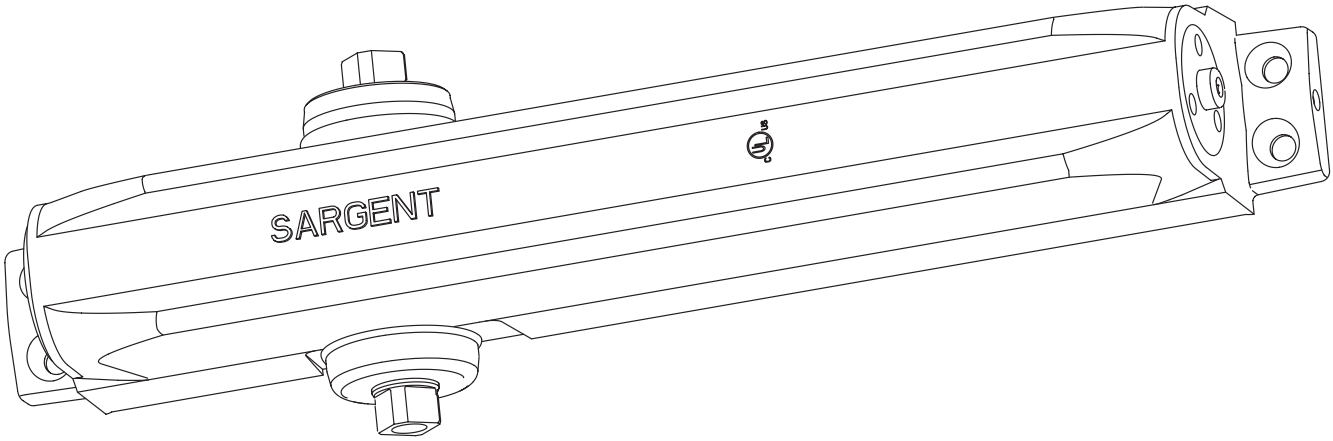

Strength, Durability and Security

- Meets and exceeds ANSI/BHMA A156.4 Grade 1 requirements
- UL and UL 10C listed
- Complies with ADA requirements and ANSI 111.7 and exterior doors
- Adjustable closing force range from size 1 - 6
- High impact full plastic cover secured by machine screws
- One-piece high strength aluminum alloy body
- 1-1/4" diameter piston for enhanced control
- 7/16" square arm engagement for enhanced torque transmission
- Heat treated rack & pinion provides longevity
- Speed Control Valves
  - Separate latching, closing/sweep and back check intensity valves
  - Captivated valves are easily adjusted using a standard 1/8" Allen wrench
- Arms and accessories are powder-coated
- 5 year limited warranty, body is date coded

Convenience

- Non-handed closer
- All weather hydraulic fluid
- Easily installed in minutes!
- Easy-to-use instructions
- Full size paper templates
- Mortise nuts available when door condition requires through bolting

- **Tri Pack or "Universal Packed"** - JUO or JUH (Hold Open). Packages include one extra bracket that gives the installer a choice for installation from Standard, Parallel or Top Jamb applications.

- When Tri-Pack is not required, specific application can be ordered.

Flexibility

- Retrofits a Dor-O-Matic SC 80 and Dorma 8600
- Both machine and self-tapping screws provided
- Universal body is interchangeable for all applications (standard, top jamb & parallel)
- Designed for aluminum store front doors and frames
- Similar design style to complement the Heavy Duty Powerglide Series
- Allows door to open a full 180° (trim permitting)

Applications

- Office Buildings
- Assisted Living Facilities
- Hotel Guest Rooms
- Public Housing
- Retail Establishments

JO Standard Application, JH Hold Open (not shown)

The JO arm can be used on doors up to 48" wide and 160 lbs*. An auxiliary door stop is required. The JH hold open arm (not shown) is similar and allows for adjustable hold open from 75° to full opening.

The JO application (shown) is certified per ANSI A156.4 type C02011, including options PT4, A, B, C, D and H.

*** For doors heavier then 160 lbs., 1430 series closers should be used.**

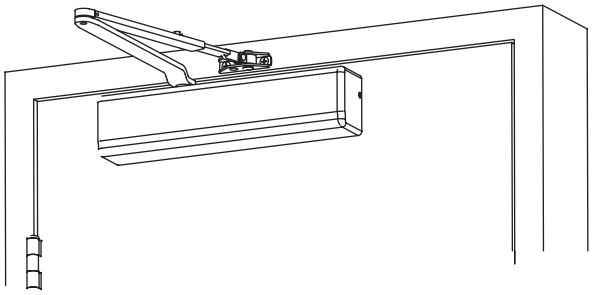

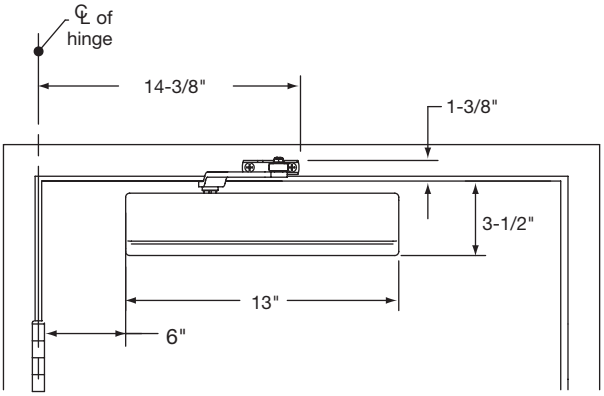

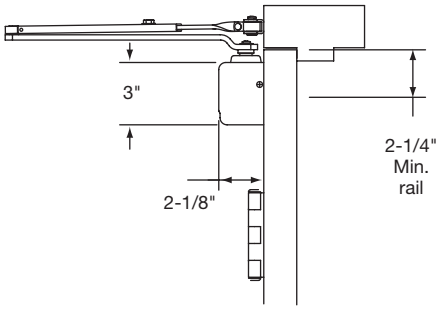

Closer shown templated for 120° max. opening

JP9 Parallel Arm Application, JPH9 Hold Open (not shown)

The JP9 arm can be used on doors up to 48" wide and 160 lbs*. An auxiliary door stop is required. The JPH9 hold open arm (not shown) is similar and allows for adjustable hold open from 75° to full opening.

The JP9 application (shown) is certified per ANSI A156.4 type C02021, including options PT4, A, B, C, D and H.

*** For doors heavier then 160 lbs., 1430 series closers should be used.**

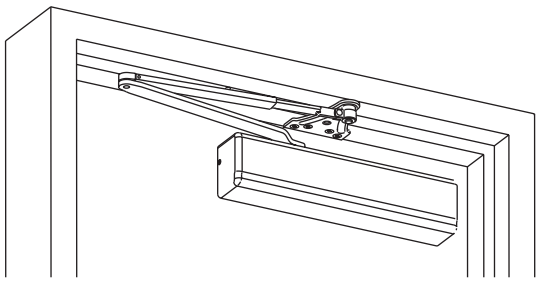

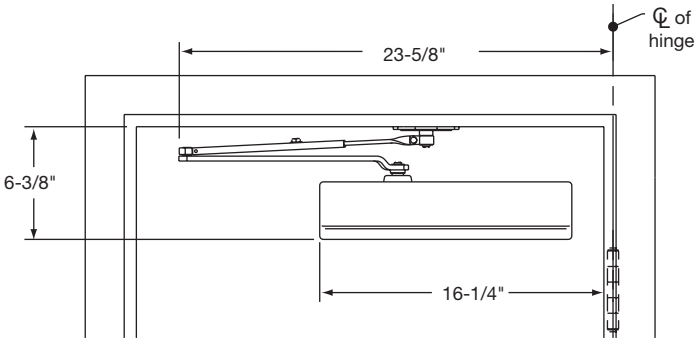

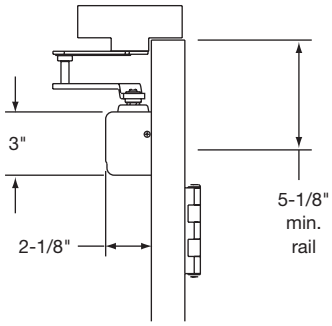

Closer shown templated for 120° max. opening

1331 Series Door Closers Top Jamb Application & Door Closer Operation

SARGENT
1-800-727-5477
www.sargentlock.com

JO Top Jamb Application, JH Hold Open (not shown)

The JO arm can be used on doors up to 48" wide and 160 lbs* with reveals less than 3 inches. An auxiliary door stop is required. The JH hold open arm (not shown) is similar and allows adjustable hold open from 75° to full opening.

Maximum weight of 160 lbs.

The JO Top Jamb application (shown) is certified to ANSI A156.4 type C02041, including options PT4, A, B, C, D and H.

*** For doors heavier then 160 lbs., 1430 series closers should be used.**

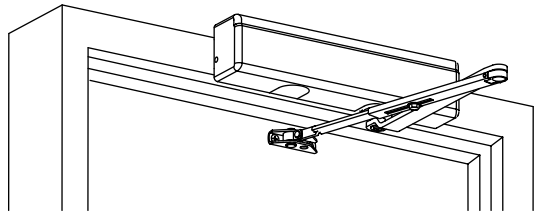

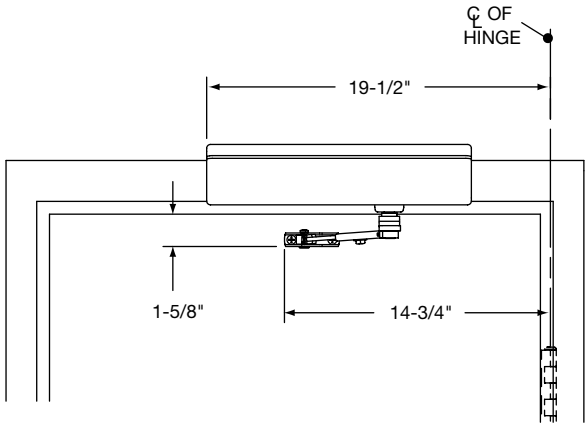

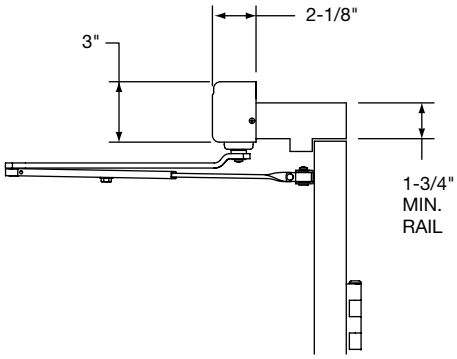

Closer shown templated for 120° max. opening

Door Closer Operation

1. When the door is opened, the arm rotates the spindle, compressing the spring and storing energy.

   This "stored energy" will be released as the door closes.

2. Backcheck is a standard adjustable feature that adds resistance as the door is opened to at least 70°. This slows the door prior to making contact with a door stop at 90 degrees

   For doors that open more than 90 degrees, backcheck can be easily turned off.

   Backcheck should not be used as a door stop.

   An auxilary door is still required.

3. Closing or Sweep Speed allows you to adjust the time for the door to close from a fully open position to 2"-10" away from the closed position.

4. Latching Speed is one more valve to provide additional control of the door for the last few inches.

   This additional control is sometimes needed to overcome interference such as latches, door coordinators, exit devices and weather stripping.

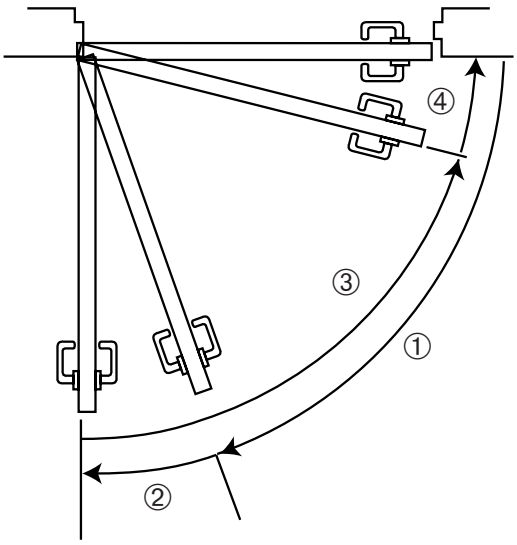

1. Opening Cycle
2. Backcheck
3. Closing/Sweep Cycle
4. Latching Cycle

Accessories

1331D Drop Plate Parallel Arm Application used with Narrow Top Rail

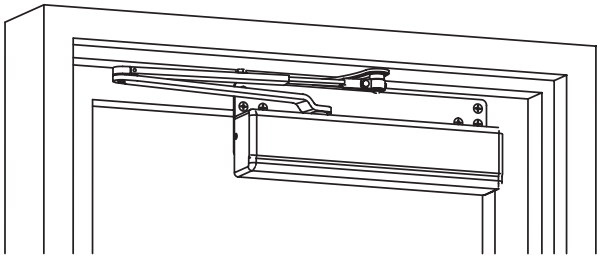

JP9 Arm shown with drop plate

1331D Drop Plate is required when top rail is less than 5-1/8".
A minimum 3" is required

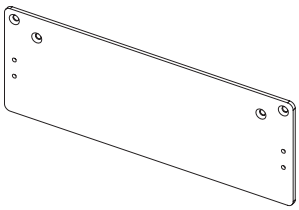

1331B Mounting Plate used on a narrow face frame

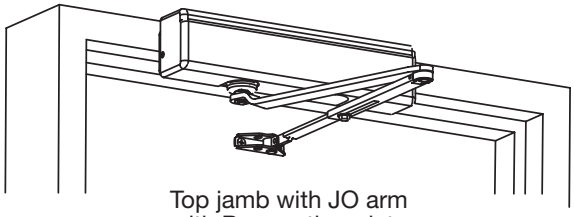

Top jamb with JO arm with B mounting plate

1331B Mounting Plate is required when frame face is less than 1-5/8".
A minimum 1-1/8" is required when Auxiliary Lock hardware such as overhead stops or door coordinators, etc. are used

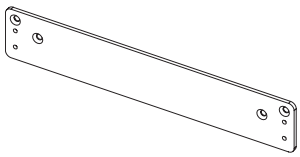

581-1 Blade Stop Kit

Kit includes longer fasteners and 1/2" thick metal spacer for use with 1/2" blade stops commonly found on store front aluminum frames.
Used with JP9 and JHP9 arms

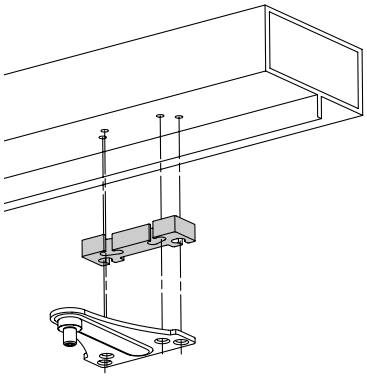

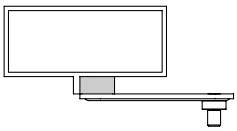

ADA compliance

The 1331 Series is designed to meet the opening force requirements established by the Americans with Disabilities Act for 5 lbs. of opening force for interior doors. The spring power is fully adjustable. Where excessive draft and pressure conditions exist or when heavy doors are used, power will need to be adjusted to a stronger setting. Various field conditions (drafts) exist that make the use of ADA adjustments ineffective. When these conditions exist, refer to the 4000 Series Low Energy Operator.

1331 Series Door Closers Architectural Specifications, How To Order & Packing

SARGENT
1-800-727-5477
www.sargentlock.com

Specifications

2.0 DOOR CLOSERS

A. Door closers shall be 1331 Series as manufactured by SARGENT Manufacturing Company, New Haven, CT.

B. Door closers shall meet ANSI/BHMA A156.4, Grade 1 requirements.

C. Door closers shall be UL listed (US and Canada) for use on fire doors.

D. Door closer shall meet the requirements of UL 10C positive pressure fire tests.

E. Provide closers adjustable from sizes 1 through 6.

F. Closers shall be non-handed to meet a variety of door conditions and design requirements.

G. Closing speed, latching speed and backcheck shall be controlled by separate key operated, captivated valves.

H. Closers shall have heat treated rack and pinion construction.

I. An increase of 15 percent in closing power shall be provided by means of adjustment of the arm leverage at the foot connection. (Standard Arm mount)

J. Closer main arms shall be heavy duty steel with powder coated finish.

K. Door closer bodies:

1. One piece door closer body shall be of high strength aluminum alloy
2. Adjustment valves shall be captivated and non-critical.
3. Closer spindle shaft shall be sealed hydraulically with an "O" ring.

L. Projection of closer body from door shall not exceed 2-3/16 inches (56mm).

M. Closer covers shall be constructed of high impact plastic material of flame retardant grade, secured by machine screws.

N. Closer covers shall be of the same style/design of other closers specified for this project.

O. Closers shall be suitable for standard, top jamb, and parallel arm type applications when provided with proper brackets and arms.

P. Door closers shall have a five year limited warranty.

Packing

- Closer packaged 4 per carton

Series	Number per Carton	Approx. wt per Carton
1331	4-Standard	28 lbs. per 4

How To Order

		Example
Series	1331	1331
Arm	Arms available: JO, JP9, JH, JPH9, JUH, JUO	1331 JUO
Finish	EB – Bronze Enamel to match 10B ED – Bronze Enamel to match 20D EN – Aluminum Enamel EP – Bronze Enamel to match US10 EAB – Brass Enamel to be used with brass finishes	1331 JUO EB
Mortise Nuts	Used with machine screws standard, specify TB	1331 JUO EB TB

How To Order Accessories

		Example
Arm Only	Specify arm (JO, JP9, JH, JPH9)	25-JO EN
Cover only (Standard)		1331-C x finish
Plates x finish	1331B (Top Jamb use) or 1331D (Parallel Arm use)	1331-B x Finish
Complete Screw Pack		61-2768 x finish

NOTE: When complete closer assembly is ordered with an accessory, order accessory as a separate item

ESSEX™
THE TOTAL OPENINGS PEOPLE

SARGENT Manufacturing Company • 100 Sargent Drive • P.O. Box 9725 • New Haven • CT 06536-0915
Phone: 800-727-5477 • Fax: 888-863-5054 • Web site: www.sargentlock.com
SARGENT of Canada • Phone: 905-940-2040 • Fax: 905-940-3242 • Web site: www.sargentcanada.ca

Founded in 1864, SARGENT® is a market leader in locks, cylinders, door closers, exit devices, electro-mechanical products and access control systems for new construction, renovation and replacement applications. The company's customer base includes commercial construction, institutional and industrial markets.

The ASSA ABLOY Group is the world's leading manufacturer and supplier of locking solutions, dedicated to satisfying end-user needs for security, safety and convenience.