SARGENT®

351 Series Powerglide® Door Closer

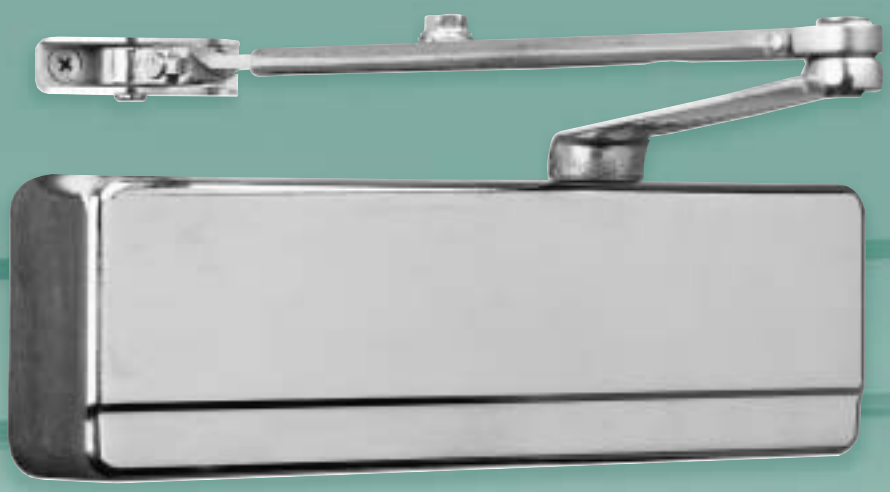

An ASSA ABLOY Group company

ASSA ABLOY

351 Series Powerglide® Door Closers

SARGENT
1-800-727-5477
www.sargentlock.com

Table of Contents

	Page
How to Select the Proper Closer	1
Cutaway Illustrations and 351 Features	2
351 Standard Applications	3-4
351 Top Jamb Applications	5-6
351 Parallel Arm Applications	7-10
351 Track Type Applications	11
351 Dimensional Details	12-13
ADA Compliance Information	14
General Information	15
Architectural Specifications	16
How to Order	17

The Powerglide® line of surface and concealed door closers has been engineered to meet the demands of the modern architect and building owner. All series compliment each other, and together offer a complete line for interior and exterior doors. They have quality and flexibility...so important to today's architectural concepts where doors are subject to highly sophisticated climatic control systems and various traffic patterns to equip a building with just the right closer for every door; to maintain a uniform, contemporary look...select and specify Sargent®.

351 Series Powerglide® Door Closers
How to Select the Proper Closer

SARGENT
1-800-727-5477
www.sargentlock.com

Analyze all door requirements as follows:

1. SIZE AND WEIGHT OF DOOR

   The door closers in this catalog are non-sized so that closing force can be adjusted in the field to accommodate various door sizes and weights.

2. INTERIOR APPLICATION

   Where possible the standard application should be used. This mounting is the most efficient in terms of door closer power and control.

3. EXTERIOR APPLICATION

   Exterior doors require greater closing forces because of draft and wind conditions. HANDICAPPED SETTINGS SHOULD NOT BE USED.
   To place the closer out of the weather on exterior doors, the top jamb or parallel arm application should be used.

4. DEGREE OF OPENING

   The closer should permit the door to open far enough to allow adequate traffic flow.
   The selection of the proper arm and position on the door is most important.

5. FUNCTION

   Closers can be equipped with special arms such as hold-open, positive stop or fusible link hold-open where necessary.

6. ABUSIVE ENVIRONMENT

   Track Applications provide less of exposed arms when vandalism is emminant.

7. SPECIAL CONDITION

   Templates should be consulted when using special hinges, overhead holder's or other specialized hardware.

Standard Application
351 O Arm Shown

Push Side Track Type Application
351 POT Shown

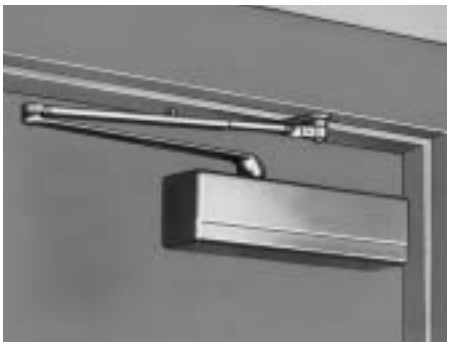

Parallel Arm Application
351 P9 Shown

Pull Side Track Type Application
351 OT Shown

Top Jamb Application
351 OZ Arm Shown

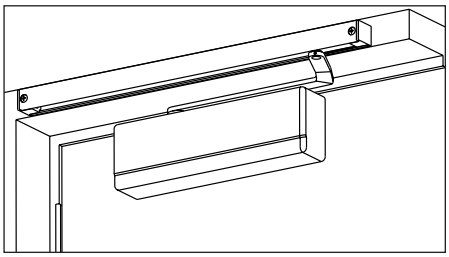

Double Egress Application
351 OD Arm Shown

351 Series Powerglide® Door Closers
Power Glide Features

SARGENT
1-800-727-5477
www.sargentlock.com

Features

- ANSI/BHMA A156.4 Grade 1
- Conforms to standards UL 10C and UBC 7-2 (1997). Positive Pressure Fire Tests of door assemblies
- UL Listed and cUL Listed to Canadian Safety Standards listed for use on fire doors
- 10-year warranty
- Versatile mounting applications permit standard, top jamb, parallel and track installations
- Adjustable spring power allows 351 closers a size range of 1 through 6. They are adjusted to size 3 before leaving the factory
- One door closer body for all applications, non-handed
- ADA requirements are met with the 351 in all applications except Push Side Track application
- High impact non-corrosive plastic covers standard, metal optional. Both secured with two machine screws
- All weather capabilities
- Captivated brass valves

Heavy Duty Construction

- Heat treated full closed rack and pinion provide control from the fulll open position
- Heavy duty one piece die cast aluminum silicon alloy body with 14% silicon provides superior strength and wear resistance

Separate Brass Low Sensitivity Adjusting Valves

- Brass body low sensitivity control valves offer separate regulating for door speed, latching, backcheck and optional delayed action
- All valves are controlled by a 1/8" Allen wrench to discourage tampering and are captivated to prevent removing valves from the body and damaging door closer
- Adjustable backcheck, standard, protects the door and hardware from damage during the opening cycle
- Adjustable delayed action, optional, permits easy access for physically impaired individuals.

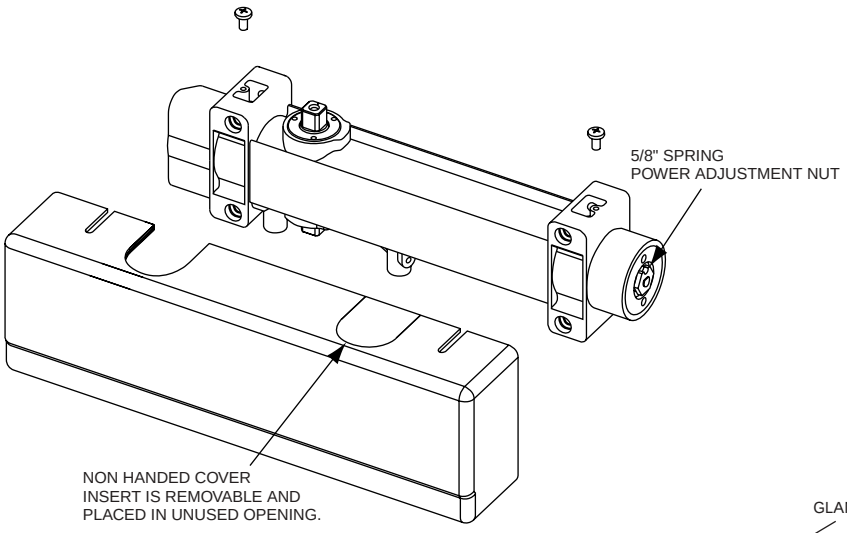

Full Compliment of Arm Types

- Interchangeable forged steel arms
- Standard and parallel arms
- Push and pull track arms (including double egress)
- Heavy duty forged steel arms are finely finished and interchangeable between SARGENT 351, 1430 and 281 Series and previously discontinued 250, 350 and 1250 Series

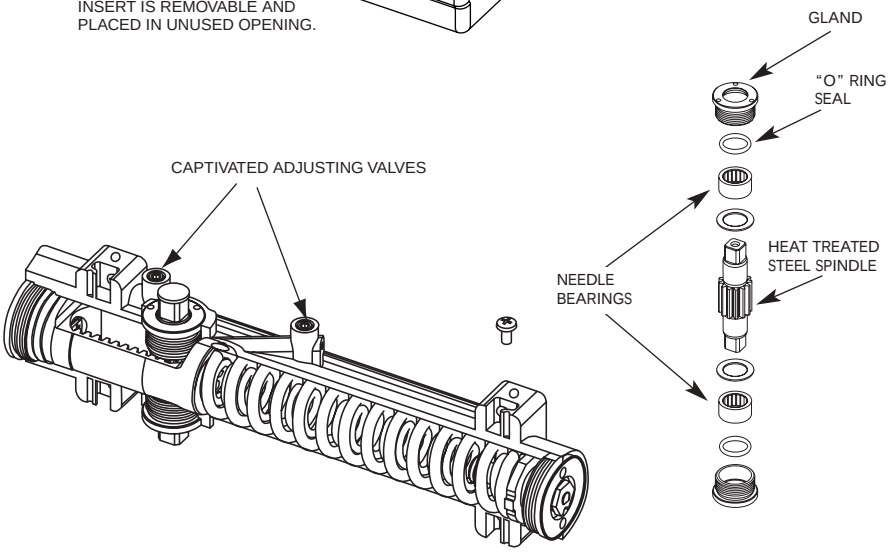

351 Series comply with ADA for reduced open forces of 5 lbs. for interior and 8 lbs. for exterior doors. See page 14 for details.

351 Series Powerglide® Door Closers
Standard Application

SARGENT
1-800-727-5477
www.sargentlock.com

This closer mounts on the hinge (pull) side top rail of door. It can be used on interior doors opening in or out and exterior doors opening in. The cover projection normally limits the door opening to a maximum of 160°.

Two closer mounting positions meet all requirements

Standard Mounting

- Maximum door opening (O Arm) - 120°
- Holding range of holder arm (H Arm) -90°-105°
- Holding range of fusible link arm (F Arm) -75°- 110°

Alternate Mounting (2" nearer hinge)

- If butt, frame and wall conditions permit, closer will allow door to open 180°
- Maximum door opening (O Arm) - 160°
- Holding range of holder arm (H Arm) -105°-160°
- Holding range of fusible link arm (F Arm) -110°-135°

Minimum Top Rail Required

- 4-1/4" (108mm)
- Can be mounted on a narrow rail up to 2-3/8" min. with use of 351-A mounting plate

Maximum Frame Projection

- Cannot exceed 7/16" (11mm)

Covers

- High impact non-corrosive full covers standard
- Metal Cover optional (Handed) ultilizing same templating. Use MC Prefix
- Cover projects 2 3/16" (56mm) from door face
- All covers secured by two machine screws

Non-Handed

- Universal Body

Non Sized-Adjustable

- Interior doors to 5'0" (1524mm) wide
- Exterior doors to 4'0" (1219mm) wide
- Shipped factory preset for 3'0" (912mm) door
- Factory pre-sized upon request

Backcheck

- Starts at approximately 70° door opening
- Not to be used as a positive stop
- An auxiliary door stop is required
- Pressure relief valve standard

Delayed Action (Optional)

- Allows door to close very slowly from 90° position to approximately 70°
- Available in addition to backcheck
- Pressure relief valve standard

ADA Compliant

- Easily adjusted to comply with ADA

Through Bolts and Mortise Nuts

- Available upon request, use suffix TB 1-3/4" thick door standard, 1-3/8" thick available

All Weather Operations

- Extreme Temperature capability is standard

Standard Finishes

- EAB, EB, ED, EN, EP (Standard) Powder coated on all exposed surfaces
- Architectural plated arms and covers (optional)

Special Rust Inhibitor Process (Optional) SRI

- Additional process to add superior rust protection prior to powder coating for arms and brackets for use in corrosive environments
- Specify SRI as suffix

351 Series Powerglide® Door Closers
Arms for Standard Application

SARGENT
1-800-727-5477
www.sargentlock.com

25-O Regular Arm

Arm Screw Pack
63-2380

- Forged Steel Arm 11-1/4" (286mm) long
- Non-Handed
- Permits 120° door opening with standard mounting
- Permits 180° door opening with alternate mounting

Order as 25-O x finish for arm only
25-O Includes: 63-2607 -Main arm and link assembly
63-2216 - Foot assembly

25-H Holder Arm

Screw Pack
63-2380

- Forged Steel Arm 11-1/4 (286mm) long
- Non-Handed
- Hand is changed by inverting the foot assembly
- Friction type holder is easily adjusted by a 15/16" wrench
- Permits 180° door opening
- Holds open from 80° to 180°

Order as 25-H x finish for arm only
25-H Includes: 63-2229 -Main arm and swivel assembly
61-2303 - Foot assembly

25-F8 Fusible Link Mortise Foot Holder Arm

Screw Pack
63-2381

- Forged Steel Arm 11-1/4" (286mm) long
- Arm is handed and must be same as the door
- Friction type holder is easily adjusted by a 15/16" wrench
- Permits 140° door opening
- Holds open to 140°
- 160°F Link Standard
- Specify 125° F link only when required

Order as 25-F8 x hand x finish for arm only
25-F Includes: 63-2240LH -Main arm assembly
63-2241RH -Main arm assembly
61-2273 -Foot assembly

25-O8 Mortise Foot Arm

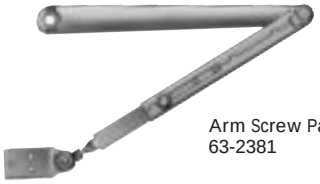

Arm Screw Pack
63-2381

- Forged Steel Arm 11-1/4" (286mm) long
- Non-Handed
- Arm is used for standard application
- Permits 120° door opening
- Commonly used with bull nose frames

Order as 25-O8 x finish for arm only
25-O8 Includes: 63-2607 -Main arm and link assembly
63-2273 -Foot assembly

25-H8 Mortise Foot Arm

Screw Pack
63-2381

- Forged Steel Arm 11-1/4" (286mm) long
- Arm is handed and must be same as the door
- Friction type holder is easily adjusted by a 15/16" wrench
- Permits 180° door opening
- Holds open from 80° to 180°
- 25 R-H8 for right hand and 25 L-H8 for left hand x finish for arm only

63-2229 -Main arm and link assembly
63-2289LH -Foot assembly
63-2290RH -Foot assembly

UO Package

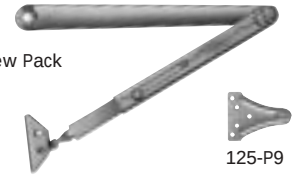

Arm Screw Pack
63-2380

125-P9

- UO affords in-the-field conversion from a regular arm to a parallel arm assembly

Order closer as: 351-UO + finish

25-OLC Low Profile Arm

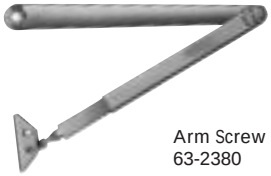

Arm Screw Pack
63-2380

- Forged Steel Arm 11-1/4" (286mm) long
- Non-Handed
- Arm requires 1/2" (13mm) less mounting space than the regular arm 25-O
- Must be used when the distance between the top of door to ceiling is less than 1-1/4" (32mm)
- Permits 120° door opening with standard mounting

Order as 25-OLC x finish for arm only
25-OLC Includes: 63-2249 -Main arm and link assembly
63-2216 -Foot assembly

25-F Fusible Link Holder Arm With 160°F or 125° F Fusible Link

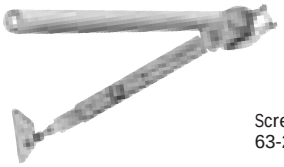

Screw Pack
63-2380

- Forged Steel Arm 11-1/4" (286mm) long
- Arm is handed and must be same as the door
- Friction type holder easily adjusted by a 15/16" wrench
- Permits 140° door opening
- Holds open from 80° to 140°
- 160° F Link Standard
- Specify 125°F Link only when required

Order as 25-RF x hand x finish for arm only
25-RF8 Includes: 63-22240LH -Main arm and link assembly
63-2241RH -Main arm assembly
63-2468 -Foot assembly

UH Package

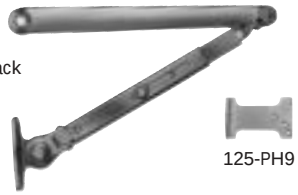

Screw Pack
63-2380

125-PH9

- UH affords in-the-field conversion from a regular hold-open arm to a parallel hold-open arm assembly

Order closer as:351-UH + finish

351 Series Powerglide® Door Closers
Top Jamb Application

SARGENT
1-800-727-5477
www.sargentlock.com

The closer is mounted inverted on top casing above stop face of door. As the door swings, the closer arm swings with the door. For use on interior doors opening either in or out; and exterior doors opening out.

Standard Mounting

[For reveals up to 2" (51mm) maximum.]

- Maximum door opening O Arm -180°
- Hold open range with H Arm- 80° - 180°
- Hold open range with F Arm- 80° - 130°

Standard Mounting

[For reveals from 2-1/8" (54mm) to 5" (127mm)]

- Max. door opening with OZ Arm- 140°
- Hold open range with HZ Arm- 80°- 130°
- Hold open range with FZ Arm- 80°- 130°

Standard Mounting

[For reveals from 5-1/8" (130mm) to 8" (230mm)]

- Max. door opening with OZA Arm - 140°
- Hold open range with HZA Arm- 80°-130°
- Hold open range with FZA Arm- 80°- 130°

Minimum Frame Face Required

- 1-3/4" (44mm) for both single and double rabbeted frames when mounting plates 351A or 351B are used
- 3-5/8" (82mm) without mounting plate

Minimum Door Top Rail Required to Mount Closer Foot

- 3-5/8" (92mm) minimum
- Rail height used will vary depending on type and make of auxiliary holder

Covers

- High impact non-corrosive covers
- Metal Cover optional (Handed) utilizing same templating
- Cover projects 2-3/16" (56mm) from door face
- All covers secured by two machine screws

Non-Handed

- Universal Body

Non Sized-Adjustable

- Interior doors to 5'0" (1524mm) wide
- Exterior doors to 4'0" (1219mm) wide
- Shipped factory preset for 3'0" (912mm) door
- Factory pre-sized upon request

Backcheck

- Starts at approximately 70° door opening
- Not to be used as a positive stop
- An auxiliary door stop is required
- Pressure relief valve standard

351-B Mounting Plate

- Permits mounting closers for special applications when overhead auxiliary door holders are used, or in a low ceiling condition. Specify conditions when ordering
- Wrought Steel, painted to match finish of closer
- Plates are not handed
- Plate mounting screws included
- Order as 351-B x finish

Delayed Action (Optional)

- Allows door to close very slowly from 90° position to approximately 70°
- Available in addition to backcheck
- Pressure relief valve standard

Through Bolts and Mortise Nuts

- Available upon request – specify TB suffix 1-3/4" thick doors standard, 1-3/8" thick available

All Weather Operations

- Extreme Temperature capability is standard

Standard Finishes

- EAB, EB, ED, EN, EP, powder coated on all exposed surfaces
- Architectural plated arms and covers (optional)

Special Rust Inhibitor Process (Optional) SRI

- Additional process to add superior rust protection prior to powder coating for arms and brackets for use in corrosive environments
- Specify SRI suffix

25-O Regular Arm

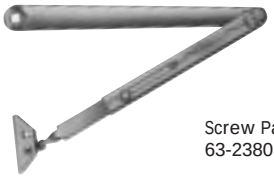

Screw Pack
63-2380

- Forged Steel Arm 11-1/4" (286mm) long
- For reveals up to 2" (51mm)
- Non-Handed
- Permits 180° door opening

Order as 25-O x finish for arm only
25-O Includes: 63-2607 -Main arm and link assembly
63-2216 -Foot assembly

25-OZ Regular Arm (for Deep Reveal)

Screw Pack
63-2380

- Forged Steel Arm 11-1/4" (286mm) long
- For reveal from 2-1/8" (54mm) to 5" (127mm)
- Non-Handed
- Permits 140° door opening

Order as 25-OZ x finish for arm only
25-OZ Includes: 63-2607 -Main arm and link assembly
63-2217 -Foot assembly

25-OZA Regular Arm (for Deep Reveal)

Screw Pack
63-2380

- Forged Steel Arm 11-1/4" (286mm) long
- For reveals 5-1/8" (130mm) to 8" (203mm)
- Non-Handed
- Permits 140° door opening

Order as 25-OZA x finish for arm only
25-OZA Includes: 63-2607 -Main arm and link assembly
63-2218 -Foot assembly

25-H Holder Arm

Screw Pack
63-2380

- Forged Steel-Arm 11-1/4" (286mm) long
- For reveals up to 2" (51mm)
- Adjustable friction holder
- Non-Handed
- Permits 180° door opening

Order as 25-H x finish for arm only
25-H Includes: 63-2229 -Main arm and link assembly
61-2303 -Foot assembly

25-HZ Holder Arm (for Deep Reveal)

Screw Pack
63-2380

- Forged Steel Arm 11-1/4" (286mm) long
- For reveal from 2-1/8" (54mm) to 5" (127mm)
- Adjustable friction holder
- Non-Handed
- Permits 140° door opening

Order as 25-HZ x finish for arm only
25-HZ Includes: 63-2230 -Main arm and link assembly
61-2303 -Foot assembly

25-HZA Holder Arm (for Deep Reveal)

Screw Pack
63-2380

- Forged Steel Arm 11-1/4" (286mm) long
- For reveals 5-1/8" (130mm) to 8" (203mm)
- Adjustable friction holder
- Non-Handed
- Permits 140° door opening

Order as 25-HZA x finish for arm only
25-HZA Includes: 63-2231 -Main arm and link assembly
61-2303 -Foot assembly

25-F Fusible Link Holder Arm (Inverted)

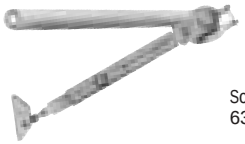

Screw Pack
63-2380

- Forged Steel Arm 11-1/4" (286mm) long
- For reveals up to 2" (51mm)
- Adjustable friction holder
- Arm is handed same as the door
- Permits 140° door opening
- 160° F link standard
- Specify 125° F link only when required

Order as 25-F x hand x finish for arm only
25-F Includes: 63-2240LH -Main arm and link assembly
63-2241RH -Main arm and link assembly
63-2468 -Foot assembly

25-FZ Fusible Link Holder Arm (Inverted for Deep Reveal) with 160°F or 125°F Fusible Link

Screw Pack
63-2380

- Forged Steel Arm 11-1/4" (286mm) long
- For reveals 2-1/8" (54mm) to 5" (127mm)
- Adjustable friction holder
- Arm is handed same as the door
- Permits 140° door opening
- 160° F link standard
- Specify 125° F link only when required

Order as 25-FZ x hand x finish for arm only
25-FZ Includes: 63-2240LH -Main arm and link assembly
63-2241RH -Main arm and link assembly
63-2217 -Foot assembly

25-FZA Fusible Link Holder Arm (Inverted for Deep Reveal) with 160°F or 125°F Fusible Link

Screw Pack
63-2380

- Forged Steel Arm 11-1/4" (286mm) long
- For reveals 5-1/8" (130mm) to 8" (203mm)
- Adjustable friction holder
- Arm is handed same as the door
- Permits 140° door opening
- 160° F link standard
- Specify 125° F link only when required

Order as 25-FZA x hand x finish for arm only
25-FZA Includes: 63-2240LH -Main arm and link assembly
63-2241RH -Main arm and link assembly
63-2218 -Foot assembly

351 Series Powerglide® Door Closers
Parallel Arm Application

SARGENT
1-800-727-5477
www.sargentlock.com

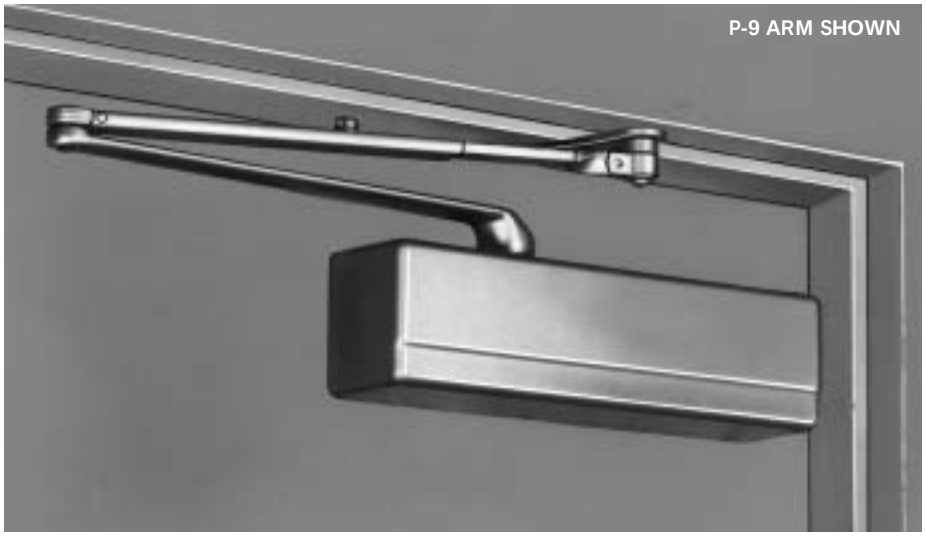

The closer is mounted on the top rail on the stop side of the door. As the door opens, the closer swings with the door and gives full headroom in the door opening.

Minimum Top Rail Required

- Without drop bracket - 6-5/16" (160mm)
- With drop bracket - 2-3/4" (70mm)
- Rail height will vary depending on type and make of auxiliary holder
- 6-7/8" (174mm) is required to completely conceal the closer body
- Add 1/2" (13mm) to requirements when using fusible link arm

Minimum Frame Stop Required For Foot Bracket

- 1-1/16" (27mm) minimum stop required except for P3 foot
- P3 foot requires 1-3/16" (30mm) stop

Minimum Mounting Space Required Between Doors

- 25-P10 Arm = 4-3/4" (121mm)
- 25-PS and PSH = 5-3/4" (146mm)
- 25-P9 = 4-5/8" (117mm)
- 25-PH9 = 5-3/8" (137mm)

Covers

- High impact non-corrosive cover standard
- Metal covers optional (Handed) utilizing the same templating
- Cover projects 2-1/8" (54mm) from door face
- All covers secured by two machine screws

Non-Handed

- Universal Body

Non Sized-Adjustable

- Interior doors to 5'0" wide
- Exterior doors to 5'0" wide
- Shipped factory preset for 3'0" door
- Factory pre-sized upon request

Two Closer Mounting Positions Meet All Requirements

Standard Mounting

- Maximum door opening - 120°
- Holding range of holder arm (PH9 Arm) 75°-110°
- Holding range of fusible link arm (PF9 Arm) - 75°- 110°

Alternate Mounting [2-7/8" (73mm) nearer hinge]

- Maximum door opening - 180°
- Holding range of holder arm (PH9 Arm) 110°-180°
- Holder range of fusible link arm (PF9 Arm) - 110°-180°

Backcheck

- Starts at approximately 70° door opening
- Not to be used as a positive stop
- An auxiliary door stop is required
- Pressure relief valve standard

Delayed Action (Optional)

- Allows door to close very slowly from 90° position to approximately 70°
- Available in addition to backcheck
- Pressure relief valve standard
- Specify DA suffix

Through Bolts and Mortise Nuts

- Available on request, use suffix TB 1-3/4" thick doors standard, 1-3/8" thick available

All Weather Operations

- Extreme Temperature capability is standard

Standard Finishes

- EAB, EB, ED, EN, EP, powder coated on all exposed surfaces
- Architectural Plated Arms and Covers (Optional)

Special Rust Inhibitor Process (Optional) SRI

- Additional process to add superior rust protection prior to powder coating for arms and brackets for use in corrosive environments
- Specify SRI suffix

25-P9 Regular Arm

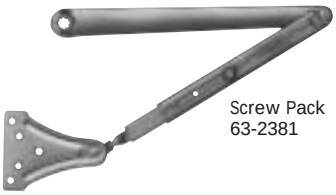

- Forged Steel Arm 11-1/4" (286mm) Long
- Non-Handed

Order as 25-P9 x finish for arm only
25-P9 Includes: 63-2607 -Main arm and link assembly
63-2271 -Foot assembly

25-P3 Special Arm (without holder)

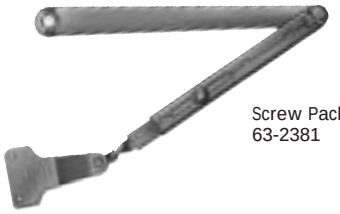

- Forged Steel Arm 11-1/4" (286mm) long
- Non-Handed
- For use with auxiliary surface overhead stops and holders
- Foot bracket is offset allowing door closer to be lowered on door face
- Opening swing limited to degree permitted by the overhead stop and holder
- Submit complete details for template instructions

Order as 25-P3 x finish for arm only 25-P3 Includes:
63-2607 -Main arm and link assembly
63-2270 -Foot assembly

25-P3A Special Arm (without holder)

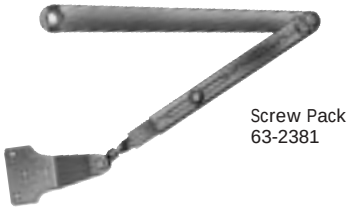

- Forged Steel Arm 11-1/4" (286mm) long
- Non-Handed
- For use with auxiliary surface overhead stops and holders
- Foot bracket is offset an additional 3/4" (19mm) allowing door closer to be lowered beyond that permitted by the 25-P3 arm
- Opening swing limited to degree permitted by the overhead stop and holder
- Submit complete details for template instructions

Order as 25-P3A x finish for arm only 25-P3 Includes:
63-2607 -Main arm and link assembly
63-2274 -Foot assembly

25-P4 Transom Flush Arm

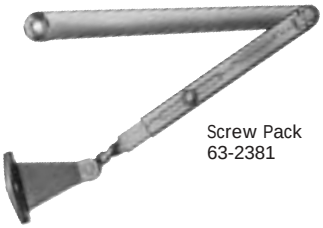

- Forged Steel Arm 11-1/4" (286mm) long
- Non-Handed
- Foot bracket is attached to frame or transom face
- For use were stop or soffit is to narrow for the standard 25-P9
- Permits 120° opening with standard mounting
- Permits 180° opening with alternate mounting

Order as 25-P4 x finish for arm only
25-P4 Includes: 63-2607 -Main arm and link assembly
63-2295 -Foot assembly

25-P4A Transom Flush Arm

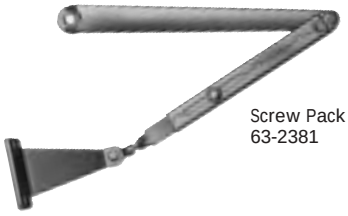

- Forged Steel Arm 11-1/4" (286mm) long
- Non-Handed
- For use with auxiliary surface overhead stops and holders
- Foot bracket is attached to frame or transom face
- Foot bracket is offset an additional 3/4" allowing for clearance for use of overhead stop and holder
- Opening swing limited to degree permitted by the overhead stop and holder

Order as 25-P4A x finish for arm only
25-P4A Includes: 63-2607 -Main arm and link assembly
63-2272 -Foot assembly

25-PF9 Fusible Link Holder arm with 160°F or 125°F Fusible Link

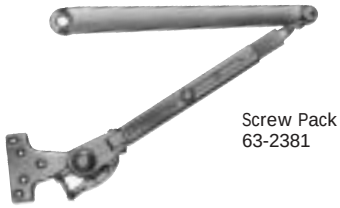

- Forged Steel Arm 11-1/4" (286mm) long
- Arm is handed same as door closer
- Fusible link melts and releases hold mechanism allowing door to close
- 160°F fusible link standard, 125°F link optional
- Equipped with adjustable friction holder
- Holds open from 90° to 180° door opening
- Easily adjusted by wrench

Order as 25-PF9 x hand x fusible link degree x finish for arm only 25-PF9 Includes:
63-2229 -Main arm and link assembly
63-2245LH -Foot assembly
63-2246RH -Foot assembly

25-PH4 Flush Transom Holder Arm

2 Screw Packs
Required
63-3684
63-2391

- Forged Steel Arm 11-1/4" (286mm) long
- Non-Handed
- Equipped with an adjustable friction holder
- Holds open from 75° to 180°
- Easily adjusted by wrench
- Use on frames where stop or soffit is too narrow to mount the standard hold open foot bracket

Order as 25-PH4 x finish for arm only 25-PH4 Includes:
63-2229 -Main arm and link assembly
63-2303 -Foot assembly
64-0050 -Foot bracket

25-PSH Holder Stop Arm (Heavy Duty)

2 Screw Packs
Required
63-2392
63-3684

- Provides holder and stop features
- Handed arm is field reversible
- Easily installed/adjusted
- For flush frame conditions, are mounts on 125-VF bracket. Bracket must be ordered separately
- For narrow frame conditions, arm mounts on 125-V bracket. Bracket must be ordered separately
- Permits 85° to 110° door opening

Order as 25-PSH x finish for arm only 25-PSH Includes:
63-0641-Arm and bearing assembly
63-3833 -Arm and bracket assembly

25-CPS Heavy Duty Compression Stop Arm

2 Screw Packs
Required
63-3684
63-2392

- Forged Steel Arm 11-1/4" (286mm) long
- Provides built in compression stop from 85° to 105°
- Permits 105° opening maximum
- Easily installed
- Handed arm is field reversible
- 125-VF bracket is used for flush frame conditions. Bracket is ordered separately
- 125-V bracket is used for narrow stop conditions. Bracket is ordered separately
- Dead stop within 3°

Order as 25-CPS x finish for arm only 25-CPS Includes:
63-0641 -Arm and bearing assembly
63-3830 -Arm and bracket assembly
63-0516 -Bumper holder
63-3493 -Bumper

25-PH9 90° - 180° Holder Arm

2 Screw Packs
Required
63-3684
63-2391

- Forged Steel Arm 11-1/4" (286mm) long
- Non-Handed
- Equipped with an adjustable friction holder
- Holds open from 75° to 180°
- Easily adjusted by wrench

Order as 25-PH9 x finish for arm only 25-PH9 Includes:
63-2229 -Main arm and link assembly
63-2303 -Foot assembly
64-0039 -Foot bracket (125 PH9)

25-P10 Regular Arm (Heavy Duty)

2 Screw Packs
Required
63-2392
63-3684

- Forged Steel Arm 11-1/4" (286mm) long
- Non-Handed
- Easily installed/adjusted
- Permits 120° opening at standard mounting
- Permits 180° opening at alternate mounting

Order as 25-P10 x finish for arm only
25-P10 Includes: 63-0641 -Arm and bearing assembly
63-3727 -Arm and bracket assembly

25-CPSH Heavy Duty Compression Holder Arm

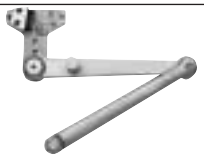

2 Screw Packs
Required
63-3684
63-2392

- Forged Steel Arm 11-1/4" (286mm) long
- Handed arm is field reversible
- Provides built in compression stop and holder mechanism from 85° to 105°
- Easily installed/adjusted
- Permits 105° opening maximum
- 125-VF bracket is used for flush frame conditions. Bracket is ordered separately
- 125-V bracket is used for narrow stop conditions. Bracket is ordered separately
- Dead stop within 3°

Order as 25-CPSH x finish for arm only 25-CPSH Includes:
63-0641 -Arm and bearing assembly
63-3836 -Arm and bracket assembly
63-0516 -Bumper holder
63-3493 -Bumper

25-PS Stop Arm (Heavy Duty)

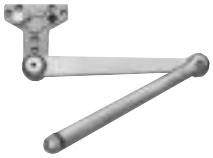

2 Screw Packs
Required
63-3684
63-2392

- Forged Steel Arm 11-1/4" (286mm) long
- Handed arm is field reversible
- Provides built in stop from 85° to 110°
- Permits 110° opening maximum
- Easily installed
- 125-VF bracket is used for flush frame conditions. Bracket is ordered separately
- 125-V bracket is used for narrow stop conditions. Bracket is ordered separately
- Permits 85° to 110° door opening

Order as 25-PS x finish for arm only 25-PS Includes:
63-0641 -Arm and bearing assembly
63-3837 -Arm and bracket assembly

25-PF9 90°-180° Fusible Link Holder Arm with 160° F or 125° F Fusible Link

2 Screw Packs
Required
63-2391
63-3684

- Forged Steel Arm 11-1/4" (286mm) long
- Arm is handed same as the door
- Provides built in stop and holder mechanism from 85° to 110°
- Permits 110° opening maximum
- The 125-VF bracket is used for for flush frames conditions. Bracket is ordered separately
- The 125-V bracket is used for narrow stop conditions. Bracket is ordered separately

Order as 25-PF9 x finish for arm only 25-PF9 Includes:
63-2229 -Main arm and link assembly
63-2245LH -Foot bracket assembly
63-2246RH -Foot bracket assembly

25-PH10 Holder Arm (Heavy Duty)

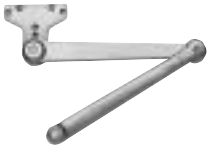

2 Screw Packs
Required
63-3684
63-2392

- Equipped with adjustable friction holder
- Adjustable hold open from 75° to 180°
- Forged Steel arm 11-1/4" (286mm) long
- Easily installed
- Arm is handed, same as door

Order as 25-PH10 x finish for complete arm assembly
25-PH10 Includes:
63-0641 -Main arm
63-3839 -Arm and bracket assembly (L.H.)
63-3840 -Arm and bracket assembly (R.H.)

125-P3 Arm Conversion Unit

- For use with overhead door holders
- Converts standard arm to 25-P3 parallel arm offset of 1" more than P-9 arm

125-P3A Arm Conversion Unit

- For use with overhead door holders
- Same as 125-P3 except that it provides a greater offset 1-7/8" more than P-9
- Converts standard arm to 25-P3A parallel arm

125-P4 Conversion Unit

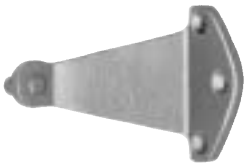

- For flush frame and transom conditions
- Converts standard arm to 25-P4A arm
- For use with auxiliary overhead stops and holders

125-P4A Arm Conversion Unit

- For flush frame and transom conditions
- Converts standard arm to 25-P4A arm

125-PH9 Parallel Arm Foot

- Converts standard hold open arm to 25-PH9 parallel hold open arm

351-D Drop Plate

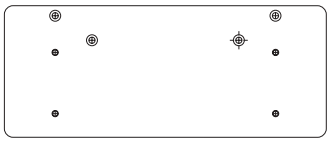

- Permits mounting 351 Series Closers having parallel arm applications on doors with narrow top rails
- Requires 3" (76mm) minimum top rail
- For closers used with overhead stops and holders, top rail requirements will vary depending upon type and make of holder
- Steel primed and painted to match closer finishes
- Plates are not handed
- Plate mounting screws included
- Order as 351-D x finish

125-V 125-VF Brackets

- For use with 25-P10 and 25-PS/PSH arms
- Use 125-V for narrow stop and frame conditions
- Use 125-VF for flush door and frame conditions

125-P9 Parallel Arm Foot

- Converts standard arm 25-0 to a P-9 (Parallel Arm)

Spacer 63-0191

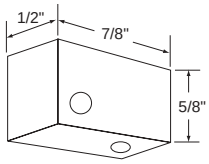

- Included with PS, PSH, P10, PH10, CPS and CPSH arm as standard used with last screw

581-2 Blade Stop Spacer Kit

- For frames with 1/2" (13mm) blade stops
- For use with P10, PS, PSH, CPS and CPSH arms
- Includes above spacer
- Packed with 1-1/4" (31mm) long screws and 125-V bracket

  *To order Blade Stop only use P/N 64-0157

581-1 Blade Stop Spacer Kit

- For frames with 1/2" (13mm) blade stops
- For use with P9, PH9 and PF9 arms only
- Packed with 1-1/4" (31mm) long screws

25-OD Double Egress Arm

Screw Pack
63-3685

- Forged Steel Arm
- Handed
- For use with reveals from 3" to 4"
- Available with Holder option (HD) and bumper option (B)

Order as 25-OD x finish for track and arm assembly
25-OD Includes:
63-2447 -Track Assembly
63-3656 -LH Arm
63-3637 -RH Arm

351 Series Powerglide® Door Closers
Track Type Applications

SARGENT
1-800-727-5477
www.sargentlock.com

Pull Side Mounting (Hinge Side)

Push Side Mounting (Stop Side)

The closer is mounted on the door. As the door opens, the closer swings with the door. For use on interior doors opening in or out. This application affords a variable hold-open feature which is available on order.

TWO MOUNTING APPLICATIONS ARE AVAILABLE

Pull Hinge Side Mounting (Track mounts on frame face)

- Minimum top rail required without mounting plate = 2-3/8" (60mm)
- Mounting plates cannot be used for this application

Maximum Door Opening

- 160° with standard track
- 120° with optional bumper track
- 180° with ideal conditions for standard track

Pull Side Double Egress

- 160° maximum door opening
- 120° opening with bumper option
- Range of hold open 85°-120°
- Used with reveals 3" to 4" (76mm-102mm)

Hold Open Range

- 85° to 120°

Push Stop Side Mounting (Track mounts on frame stop)

- Minimum top rail required without drop plate = 5-3/4" (146mm)
- With 351-D Drop Plate 3" (76mm)

Minimum Stop Required

- 1-9/16" (40mm) wide

Maximum Door Opening

- 100° with standard track
- 95° with optional bumper track

Hold Open Range

- 85° to 95°

Arm & Track	Description
25-OT	Pull
25-OTB	Pull with Bumper
25-HT	Pull with Holder
25-HTB	Pull with Holder and Bumper
25-OD	Pull Double egress (Handed)
25-ODB	Pull Double egress with Bumper (Handed)
25-HD	Pull Double egress with Holder (Handed)
25-HDB	Pull Double egress with Holder and Bumper (Handed)
25-POT	Push
25-POTB	Push with Bumper
25-PHT	Push with Holder
25-PHTB	Push with Holder and Bumper

Covers

- High impact non-corrosive covers standard
- Metal covers optional (Handed) utilizing the same templating
- Cover projects 2-3/16" (56mm) from door face
- All covers secured by two machine screws

Track

- Extruded aluminum track

Arm

- Forged steel

Bumper (optional)

- Mounts in track to assist backcheck
- Not designed to be used as a stop
- Auxiliary stop is required
- Available for both regular or hold open tracks

Holder (optional)

- Mounts within the track (adjustable)

Non Sized-Adjustable

- Interior doors to 5'0" wide
- Shipped factory preset for 3'0" door
- Factory pre-sized upon request

Backcheck

- Starts at approximately 70° door opening
- Not to be used as a positive stop
- An auxiliary door stop is required
- Pressure relief valve standard

Delayed Action (Optional)

- Allows door to close very slowly from 90° position to approximately 70°
- Available in addition to backcheck
- Pressure relief valve standard

Through Bolts and Mortise Nuts

- Available on request – specify TB suffix 1-3/4" thick doors standard, 1-3/8" thick available

Standard Finishes

- EAB, EB, ED, EN, EP, powder coated on all exposed surfaces
- Architectural plated arms and covers optional

Special Rust Inhibitor Process (Optional) SRI

- Additional process to add superior rust protection prior to powder coating for arms and brackets for use in corrosive environments
- Specify SRI as suffix

Standard Application

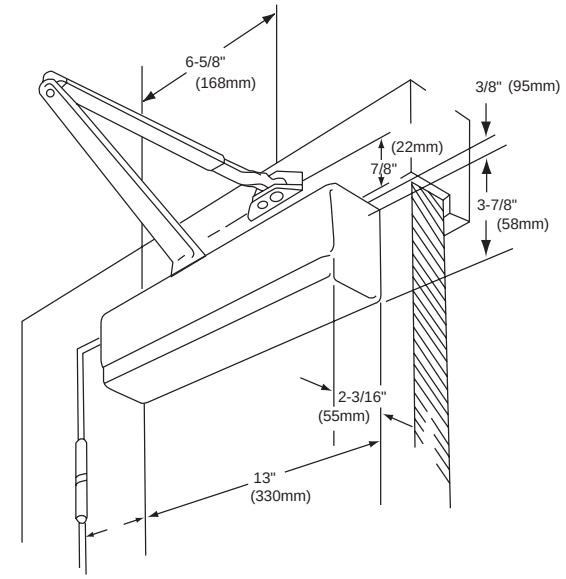

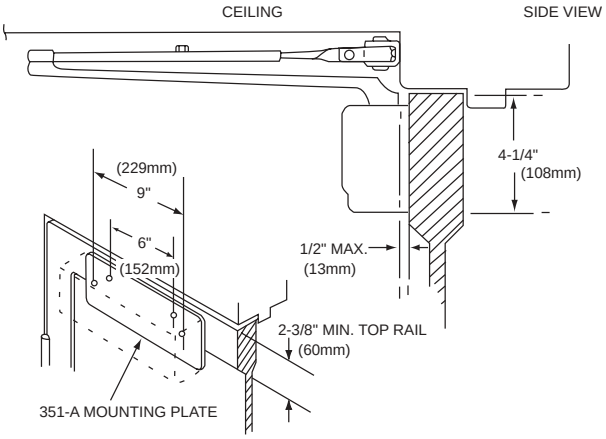

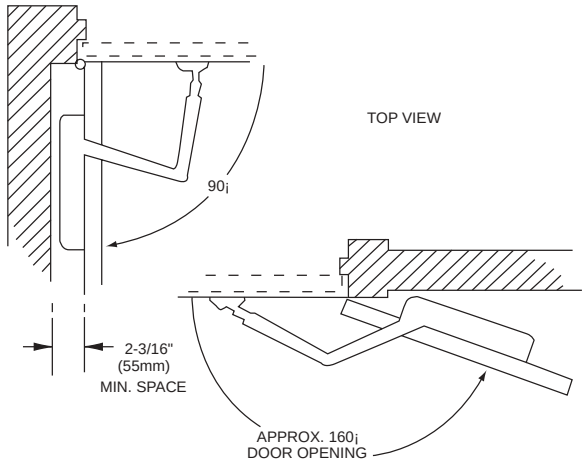

Top Jamb Application

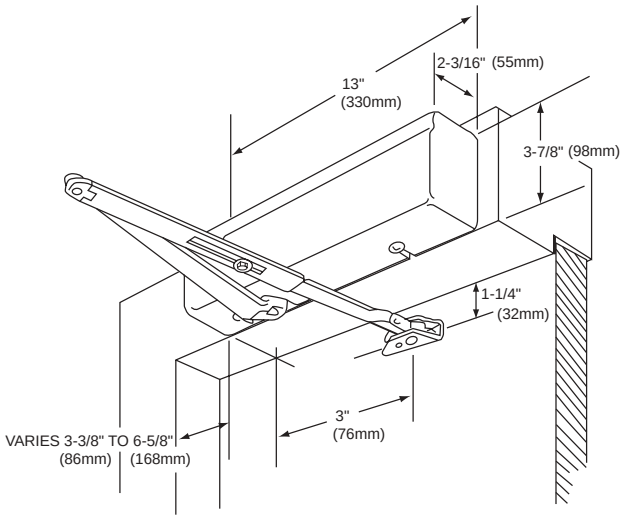

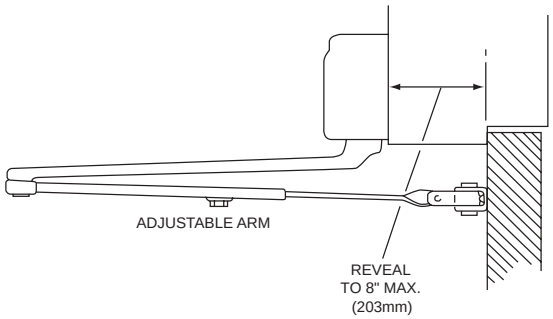

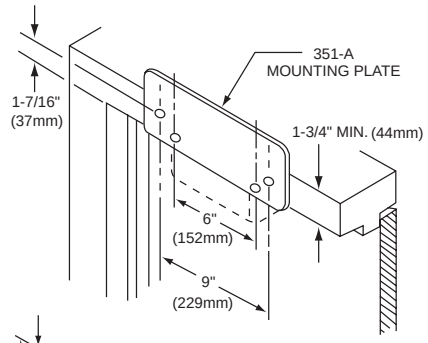

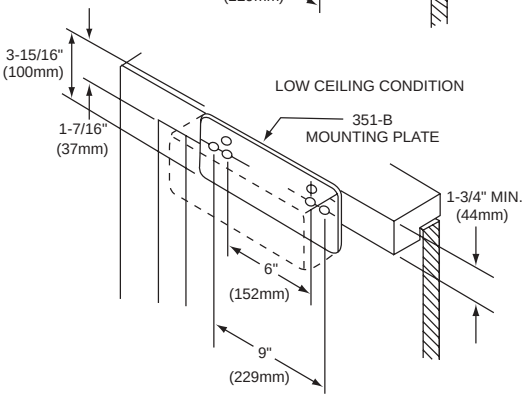

Parallel Arm Application

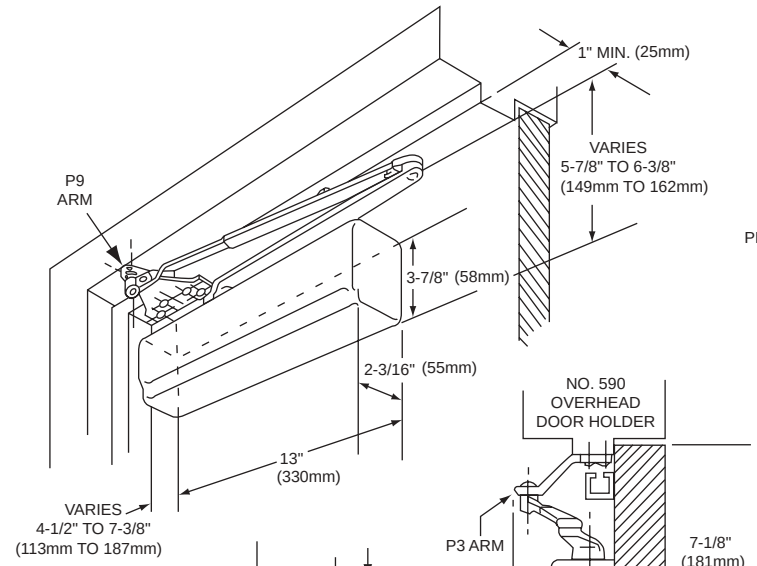

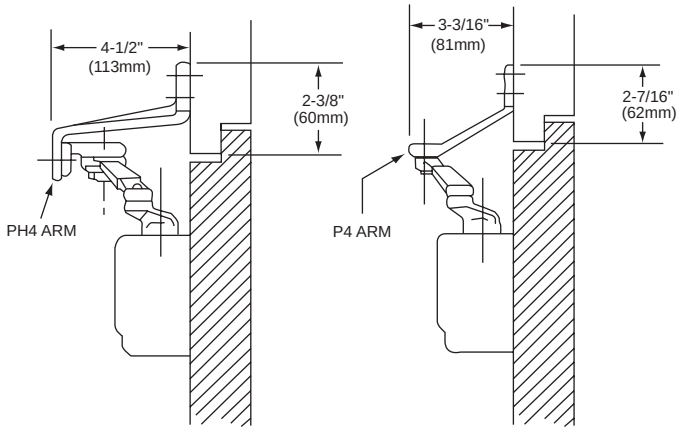

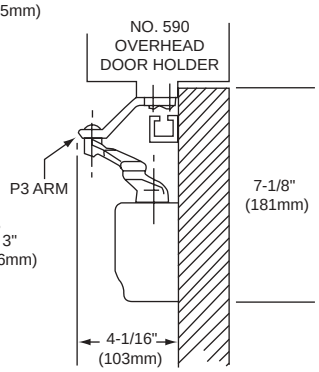

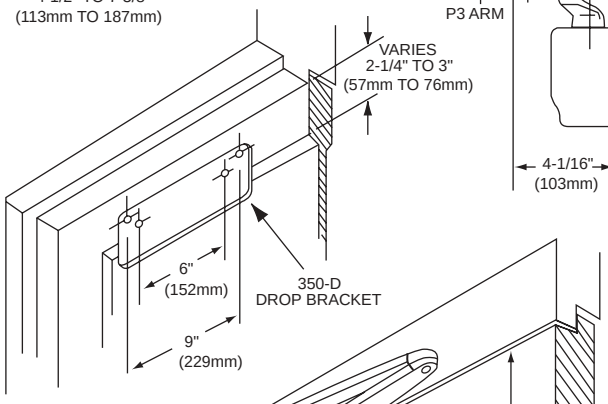

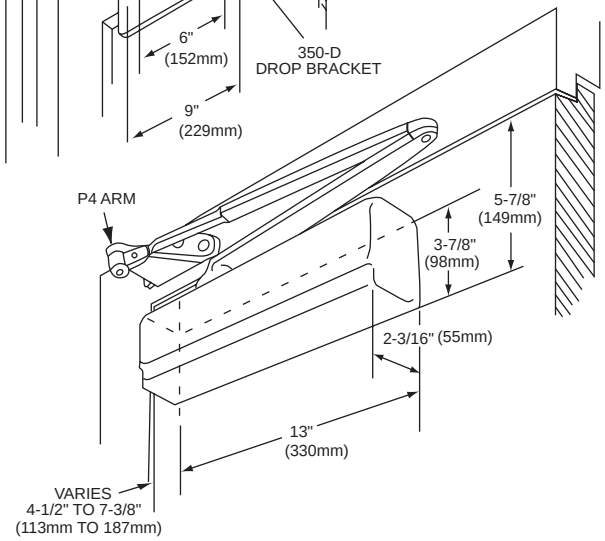

Double Egress Application

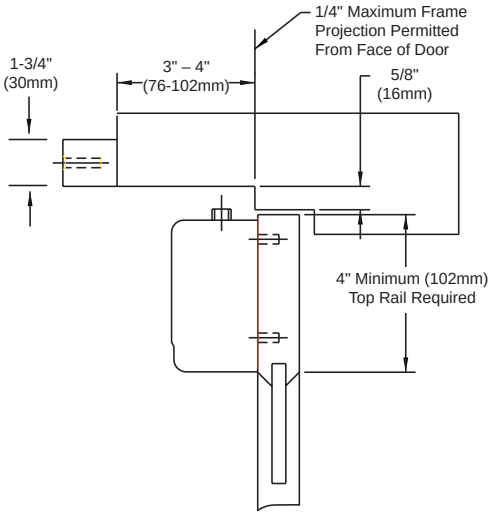

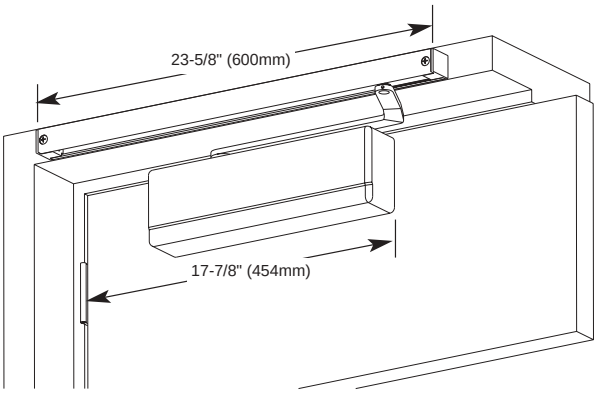

351 Series Powerglide® Door Closers
ADA Compliance

SARGENT
1-800-727-5477
www.sargentlock.com

Standard Application 351

Parallel Arm Application 351

Factors to Consider

- Door Weight
- Door Width
- Excessive Draft Pressure
- Sound & Smoke Seal

Top Jamb Application 351

Track Type Pull Application 351

The 351 door closer is designed to meet the opening force requirements established by the Americans with Disabilities Act, defining 5 lbs. of opening force for interior and 8 lbs. for exterior doors. An adjustable spring design affording easier access and allowing exterior doors control is used. Where excessive draft and pressure conditions exist or when extra heavy doors are used, spring should be adjusted for stronger setting. Meeting ADA requirements can be achieved at all applications shown above with simple spring adjustment. Various field conditions (drafts) exist that make the use of ADA adjustments ineffective. When these conditions exist, refer to SARGENT 2600 auto operator.

351 Series Powerglide® Door Closers General Information

SARGENT
1-800-727-5477
www.sargentlock.com

Closer Adjustment

All 351 closers are equipped with key control valves to discourage unauthorized tampering with closing cycle adjustments.

Door and Latching Speeds

Two separate valves control the closing speed of the door. The door speed valve controls the speed of the door from full opening to within approximately 2" to 10" of the closed position. The latching speed valve controls the speed of the door from approximately 2" to 10" to full closing, turning either valve in a clockwise direction slows the speed of the door.

Backcheck

Backcheck is designed to start at approximately 70° door opening. The backcheck feature is not to be used as a positive stop.
A door stop must be used.

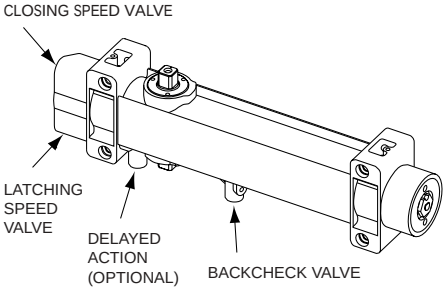

Adjustable Spring Feature

All door closers offer an adjustable spring feature. Spring power of the closer can be increased from a size 1 closer to a size 6 by turning the spring adjustment nut clockwise.

Delayed Action (optional feature)

A delayed action feature is available for all applications and arms. This feature permits the door to close very slowly through the delayed action cycle range. Closers with this feature are furnished with backcheck as standard.

Arm Leverage Adjustment

Closers using "O" or "F" arms have the provision to increase closing power by 15% by adjusting foot pivot.

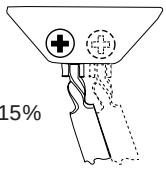

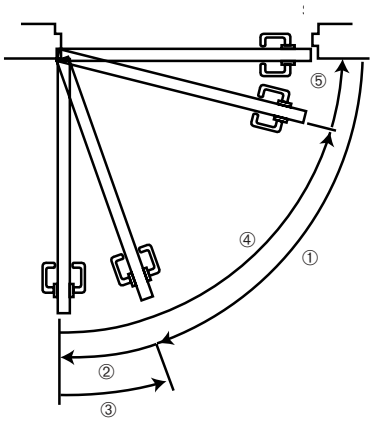

1. Opening Cycle
2. Backcheck
3. Delayed Action Cycle
4. Closing Cycle
5. Latching Cycle

All Weather Fluid Standard

Through Bolts and Mortise Nuts

When through bolting is ordered, factory will furnish mortise nuts only for use with the machine screws furnished with the closer. Nuts are sized to accommodate 1-3/8" (35mm) or 1-3/4" (44mm) thick doors. Specify thickness when ordering. If not specified, nuts for a 1-3/4" (44mm) door will be furnished. For 2-1/4" (57mm) thick doors, thru bolts will be furnished with mortise nuts. Thru bolting is not recommended for 2-1/4" (57mm) thick hollow metal doors unless a bridge type reinforcement is provided to prevent collapse of top rail when thru bolts are tightened.

Underwriters' Laboratories Listing

All SARGENT Powerglide® Door Closers have been listed by the Underwriters Laboratories, Inc. as follows:

"For Self-Closing Doors Without Hold-Open Feature"

"For Automatic Doors With Hold-Open Arm Embodying Fusible Link Release"

ANSI/BHMA Specifications

The 351 series doors closers are designed to meet the requirements of ANSI A156.4 Grade 1.

Conforms to standards UL 10C and UBC 7-2 (1997) (Positive pressure fire test)

Use of Auxiliary Door Stops

A door stop is recommended to serve as a final stop in order to protect the wall, trim, door and closer. This is true for all cases whether or not a door closer holder arm, or closer with backcheck is used.

Standard Finishes (Painted)

EAB Brass enamel to be used with brass finishes

EB Bronze enamel to match 10B

ED Bronze enamel to match 20D

EN Aluminum enamel

EP Bronze enamel to match US10 and plated

NOTE: Plated finishes are also available for covers and arms

S.R.I.(Special Rust Inhibitor)
Addition process prior to painting arms, assemblies, brackets and plates for extra protection when in extreme (corrosive) environments. (optional).

SARGENT Arm Comparison

Arm Model #	ANSI
O	CO2011
P9	CO2021
H	CO2051
PH9	CO2061
F	CO2091
PF9	CO2101
O	CO2041
H	CO2081
F	CO2121

351 Series Powerglide® Door Closers Suggested Architect's Specifications

SARGENT
1-800-727-5477
www.sargentlock.com

351 Series Powerglide®

1. All closers for both interior and exterior doors shall be the product of one manufacturer and be matched in style.
2. Surface closers shall be adjustable to provide sizes 1 through 6 and comply with ADA.
3. Full rack and pinion construction.
4. Closing speed, latching speed and backcheck shall be controlled by key operated valves.
5. Captivated valves.
6. Delayed action feature shall be available and controlled by a separate valve. Delayed action shall be available in addition to, not in lieu of, backcheck.
7. The one piece closer body shall be of die cast aluminum alloy with 14% silicon minimum content.
8. An increase of 15% in closing power shall be provided by means of adjustment of the arm leverage at the foot connection. (Standard Arm)
9. All arms shall be finely finished with heavy duty forged steel main arm.
10. Two mounting positions of the closer shall meet all requirements. Standard mountings shall provide 120° door opening and alternate mounting 180° door opening.
11. All closers shall be suitable for standard, top jamb, parallel arm and track type applications when provided with proper brackets and arms.
12. Closer covers shall be of high impact plastic material of flame retardant grade. Secured by machine screws.
13. Projection of closer body from door shall not exceed 2-3/16" (56mm).
14. Closers shall be non-handed to meet a variety of door conditions and design requirements.
15. The spindle shaft shall be sealed hydraulically with an “O” ring.
16. Specify desired options such as: Metal Cover, (SRI) Special Rust Inhibitor Process, (TB) Thru Bolting, (DA) Delayed Action and Architectural Plated Finishes.
17. All closer bodies have a 10 year limited warranty.
18. Closers should comply with UL 10C and UBC 7-2(1997) Positive Pressure Fire Test.
19. Closers to be Grade 1 of ANSI/BHMA A156.4.

351 Series Powerglide® Door Closers
How To Order

SARGENT
1-800-727-5477
www.sargentlock.com

Special Conditions

The SARGENT Template Book contains templates for all standard applications of SARGENT Door Closers with SARGENT overhead door holders. To insure a satisfactory installation for other holders, it is recommended that complete details be submitted as follows:

- Type, size and make of holder
- Holding position (maximum door opening)
- Submit holder template being used
- Closer application being used
- Size and type of butt or hinge

In the case of unusual door, frame and butt conditions where regular goods will not meet requirements, submit drawings and complete details specifying the degree of door openings required. It is recommended that ordering information include the size of the butts (when 6" or over) so special mounting templates can be furnished to ensure a full 180° opening.

Through Bolts and Mortise Nuts

When thru bolting is ordered, factory will furnish mortise nuts only, for use with the machine screws furnished with the closer. Nuts are sized to accommodate 1-3/8" or 1-3/4" thick doors. Specify when ordering. If not specified, nuts for a 1-3/4" thick door will be furnished. For 2-1/4" thick doors, thru bolts will be furnished with mortise nuts. Thru bolting is not recommended for 2-1/4" thick hollow metal doors unless a bridge type reinforcement is provided to prevent collapse of top rail when screws are tightened.

Packing

All closer assemblies are packaged 4 per carton. All conversion units are packaged 10 per carton. On request, door closers will be be packed 2 per carton.

Series	Number per Carton	Approx. wt per Carton
351	4-Standard (2 upon request)	19 lbs. per 4
Screw	Prefix 36 — 6 lobe screws	
Substitutions:	Prefix 37 — Spanner head screws	

How To Order Complete Door Closer		Example
Series	351	351
Delayed Action	When delayed action is required specify suffix DA	351 DA
Arm with Closer	See applicable catalog section for arms available	351 DA P10
Finish, powder coated on all exposed surfaces	EB — Bronze Enamel to match 10B ED — Bronze Enamel to match 20D EN — Aluminum Enamel EP — Bronze Enamel to match US10 EAB — Brass Enamel to be used with brass finishes **Optional Plated Finishes** (Handed metal cover required)	351 DA P10 EB
Hand (Applies to F arms and metal covers only)	Non-handed	351 DA P10 EB
Thru Bolts and Mortise Nuts	When ordering mortise nuts use suffix TB 1-3/4"(44.5mm) std door thickness, for all other specify	351 DA P10 EB TB
Corrosion Protection	Special rust inhibitor Process (arm only) suffix SRI for additional protection in corrosive environments	351 DA P10 EB TB SRI

Symbol	BHMA	Description
3	605	Polished Brass
4	606	Dull Brass
9	637	Bright Bronze, Clear Coated
10	612	Dull Bronze
10B	613	Oxidized Dull Bronze, Oil Rubbed
26	625	Chrome
26D	626	Dull Chrome

How To Order Accessories		Example
Arm Only	Specify arm required and finish	25-PSH EN
Arm conversion Units	Specify unit and finish	125-P4 EB
Cover Only (Standard)	351-C x finish	351-C EN
Cover Only (Metal)	351-MC x finish and hand and arm type	351-MC + 26D + LH
Accessories	Specify accessory and finish - See applicable catalog section	351-D EB

When complete closer assembly is ordered with an accessory, order accessory as a separate item

ESSEX™
THE TOTAL OPENINGS PEOPLE

SARGENT Manufacturing Company • 100 Sargent Drive • P.O. Box 9725 • New Haven • CT 06536-0915
Phone: 800-727-5477 • Fax: 888-863-5054 • Web site: www.sargentlock.com
SARGENT of Canada • Phone: 905-940-2040 • Fax: 905-940-3242 • Web site: www.sargentcanada.ca

Founded in 1864, SARGENT® is a market leader in locksets, cylinders, door closers, exit devices, electro-mechanical products and access control systems for new construction, renovation and replacement applications. The company's customer base includes commercial construction, institutional and industrial markets.

The ASSA ABLOY Group is the world's leading manufacturer and supplier of locking solutions, dedicated to satisfying end-user needs for security, safety and convenience.