SARGENT®

Cylinders & Components

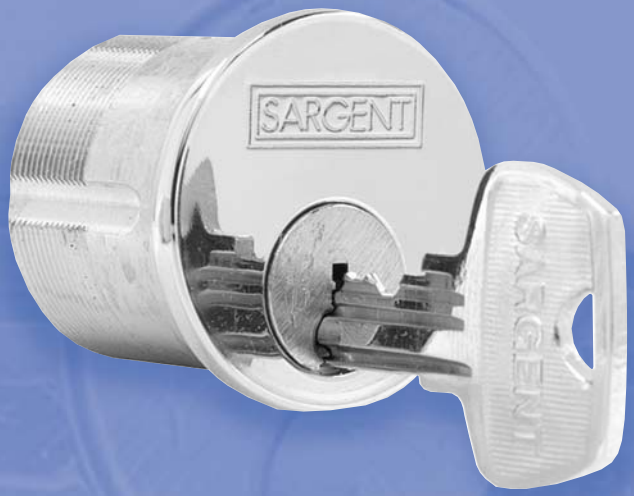

An ASSA ABLOY Group company

ASSA ABLOY

Cylinders & Components

SARGENT
1-800-727-5477
www.sargentlock.com

Table of Contents

KeyWizard™ Key Management Software 1
Bored, Auxiliary and Integralock Cylinders (Mail Box Cylinders)
& 436 Tool Kit 2
Bored, Auxiliary and Integralock Cylinder Parts 3
Mortise/Rim Cylinders 4
Mortise/Rim Cylinder Parts 5
35- Mortise Cylinders & Cams 6
6300 Series Removable Cores 7
7300B Small Format Interchangeable Cores 8
Old Style Removable Cores, Mortise/Rim Cylinders 9
Competitive Keyway Cylinders 10
124 Mortise Turn Lever Cylinders, Rosettes & Blocking Rings 11
Construction Master Keying (Lost Ball & Split Keying) &
Construction Keying Kit (Lost Ball) 12
Bitting Dimensions, Pins & Springs 13
Conventional, Signature & RC/UL Removable Core Keying Kits & Depth Key Kits . . 14
Key Blanks/Key Sections 15
Visual Key Control & Tamper Proof Packaging 16
Master Keying & Cylinder Terms 17

Pyramid. Cylinder & Key Control Products

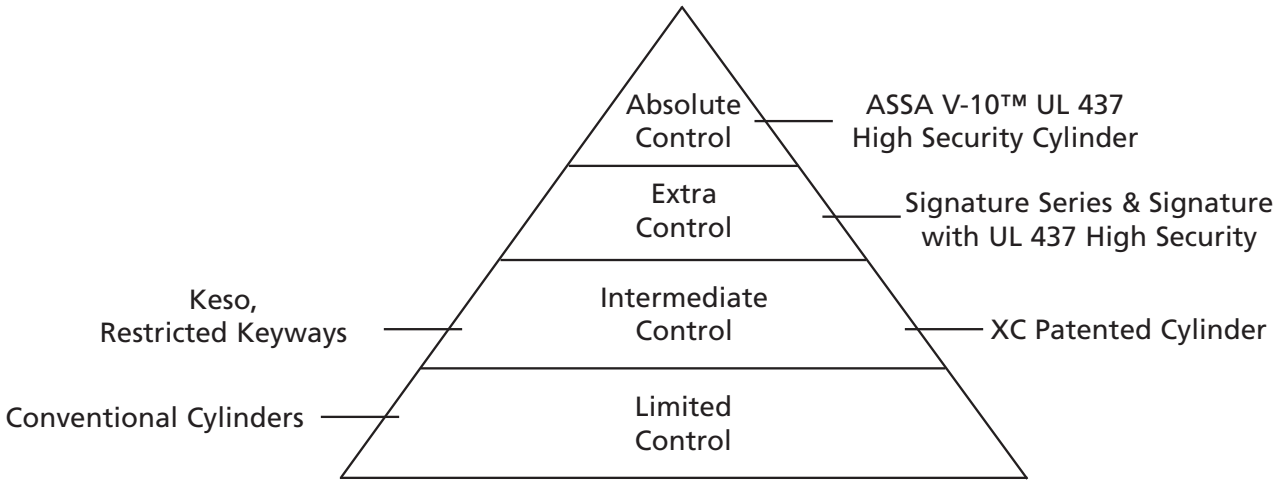

See product catalogs for more information

On The Cover

#41 Mortise Cylinder

Cylinders & Components
KeyWizard™ Key Management Software

SARGENT
1-800-727-5477
www.sargentlock.com

SARGENT'S KeyWizard™ 4.0 Software Package Tracks Multiple Key Systems Including Keys, Keyholders, Locations, and Hardware Information

This comprehensive key management software package was developed for locksmiths and end-users to track detailed information. The program features easy to navigate, non-cluttered screens and uses a format similar to Microsoft® Outlook™.

Features:

- Free technical support & free upgrades for one year
- Clear easy to read screens
- Multi-level password protection
- Manages multiple end-users and multiple key systems for most manufacturers
- Customized query, reporting, and search capability
- Global key search across multiple masterkey systems
- Comprehensive hardware listings for door locations
- Displays keyholder photos and signatures for identity verification
- Audit trail history of all key holder keys transactions
- Automatic reminders for maintenance, back-ups, and overdue keys
- Accurate key symbol sorting
- Create cylinder assembly diagrams
- Key authorization tracking
- Customized facilities' logos can now be added to key issue authorization forms
- Customized key receipts and authorization forms
- Tracking of loaned keys and key deposits
- Stores maintenance service history records
- Importing of key systems, keyholders and locations
- Exporting of key systems and locations
- Network and stand-alone versions available

By SARGENT®

How to Order:	Part Number
Single License Version	**KW-SS1**
Network Version	**KW-SSN1**
Demonstration Version	**KW-DEMO1**
KeyWizard floppy disk with new masterkey system (when purchased with hardware)	**DLKW1**
KeyWizard floppy disk with existing key systems*	**DLKW2**

KeyWizard replacement for KeyMinder
(Consult factory for eligibility requirements)

Single License Version	**UP-KW-SS1**
Network Version	**UP-KW-SSN1**

* Please consult factory for the availability of existing systems for use with KeyWizard.

Computer System Recommendations:

REQUIRED:

- 350 MHZ processor or greater
- Windows® 98, 2000, ME, NT or XP
- 16 MB RAM
- CD Drive
- Mouse pointing device
- 60 MB hard disk space

RECOMMENDED For Better Performance:

- 500 MHZ processor or greater
- Windows® 98, 2000, ME, NT or XP
- 64 MB RAM
- CD Drive
- Mouse pointing device
- 70 MB hard disk space

Cylinders & Components
Bored, Auxiliary and Integralock Cylinders
Mail Box Cylinders and 436 Tool Kit

SARGENT
1-800-727-5477
www.sargentlock.com

7, 8L, 10 and 6500 Line Cylinders (Lever Locks)

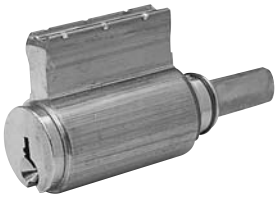

Part Numbers:

13-3266 for all functions (except 50)
13-3492 for 50 function

7, 8 and 9 Line Cylinders (Knob Locks)

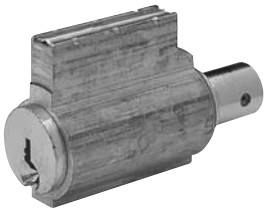

Part Numbers:

13-2194 for all functions (except 50)
13-2195 for 50 function

T-Zone (11 Line) Cylinder

Part Numbers:

13-4145 for all functions (except 50)
13-4146 for 50 function

6 Line Cylinder

Part Numbers:	Knob	Function
13-3129	"S, N"	All except 50
13-3130	"B"	All except 50
13-3108	"S, N"	50
13-3109	"B"	50

4101 Mailbox Cylinder

Consult mailbox manufacturer to determine compatibility of cylinder and mailbox. 5 or 6 pin systems

- 2 cut day keys provided
- US Postal regulations prohibit master keyed cylinder

460, 470 and 480 Deadbolt Cylinders

Part Numbers:

13-3456	474, 484
13-3457	485, 487
13-3458	475, 486
13-3495	464
13-3496	465

7600 Integralock Cylinder

Part Number:

13-3987 for all functions except 26, 27 and 50

5 and 5500 Line Cylinders

Part Numbers:

13-3526 for all functions (except 5 line 50)
13-3708 5 line 50 function hotel

436 Tool Kit

- The 436 tool kit is especially designed for servicing 6 line and 8 line cylindrical type knob locks
- The kit includes one of each
  - Bench mounted work holder, 13-3422
  - Truarc ring applicator, 01-0686
  - Torque wrench, 13-3420
  - Pin Punch, 01-0687
  - Rim cylinder barrel retainer crimper, 01-0688

All cylinders 6 pin and supplied with 2 nickel silver keys unless noted.
When cylinders ordered keyed to 5 pin systems the (6th) last chamber will be empty.
Cylinder finishes: 4 and 15.
For cylinders in competitive keyways, see Page 10.

Cylinders & Components
Bored, Auxiliary and Integralock Cylinder Parts

SARGENT
1-800-727-5477
www.sargentlock.com

Hotel Function Not Shown

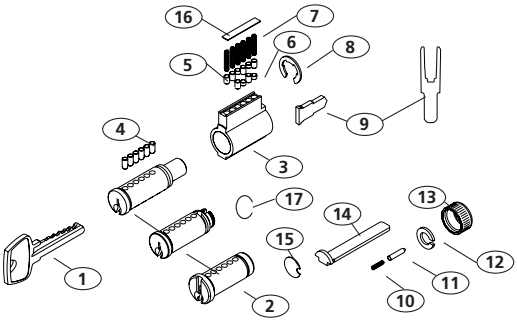

Item	Description	Lock Line	Part Number	Comment
1	6 Pin Key Blank		See Table Page 16	
2	Plug Plug Plug Plug Plug & Pin Assembly Plug & Ring Assembly	7600 470, 480 460 5500 7, 8, 9 Knobs 6, 7 Lever, 8L, 10, 11, 6500	13-0090 13-0874 13-0904 13-0920 13-3425 13-3142	New 7600 Only
3	Shell Only Cylinder Shell & Slide Assembly Without Pins & Springs	7600 7, 8L, 10, 11 Levers 7, 8, 9 Knobs 6, 6500 460/470/480 5500	13-1139 13-3257 13-2048 13-3257 – Effective 9/03 13-3493 13-3514	7600 (No Slide) Illustration Shows Slide Disassembled
4	Bottom Pin	All Cylinders	See Table Page 14	
5	Top Pin	All Cylinders	13-0059	Pin No. 10 (Length .200)
6	Master Pin	All Cylinders	See Table Page 14	
7	Compression Spring	All Cylinders	13-0265	
8	Plug Retainer Plug Retainer Ring Plug Retainer Ring Plug Retainer Ring	5 7, 8, 9 Knob Plug 6, 7 Lever, 8L, 10, 11, 6500 5500	01-0870 06-0166 13-0205 01-0870	05-0033 (6 Pin) 63-, 73- 05-0034 (7 Pin) 63-, 73-
9	60-70 Tail Piece 70 Tail Piece 60 Tail Piece 70 Tail Piece 70 Tail Piece 70 Tail Piece 70 Tail Piece 60 Tail Piece Tail Piece Tail Piece Tail Piece Tail Piece Tail Piece	60-70 6500 70-6500 60-7, 10 70-7, 10 70-7, 10 70-7, 10 70-7, 10 60-11 11 7, 8L, 10, 6500 6 (S & N Knobs) 6 (B Knob) 5500	05-0033 05-0034 10-0239 10-0239 10-0240 10-0286 10-0287 11-0170 13-1385 13-0895 13-0907 13-0908 13-0919	6 Pin Only 7 Pin Only Except 54 Function 6 Pin Except 54 Function 7 Pin Except 54 Function 6 Pin Except 54 Function 7 Pin Except 54 Function All Functions Except 50 Function 05, 24, 37, 38-2, 44
10	Cylinder Cap Spring	460, 470, 480 Series	13-1555 – Effective 6/03 13-0693 – Prior to 6/03	
11	Cylinder Cap Pin	460, 470, 480 Series	13-1554 – Effective 6/03 13-0691 – Prior to 6/03	
12	Cylinder Tail Washer	484 464, 465, 485, 486, 487	13-0882 13-0883	
13	Cylinder Endcap Cylinder Endcap	480 Series 460 Series	13-0875 13-0903	
14	Tail Piece	464, 474, 484 465, 485, 487 475, 486	13-0878 13-0880 13-0881	1-3/4" to 2" (44mm to 51mm) Door Thickness
15	Blocking Piece	460, 470, 480 Series	13-0884	
16	Slide Slide	7 Old, 7, 8, 8L, 9, 10, 11, 6500 7600	13-0779 13-0816	
17	Tail Piece Retainer	6, 7, 10, 11, 6500	13-0680	

40 Series Mortise Cylinder

- Cylinder: Solid brass, 1-5/32" (29mm) diameter
- Cap: Brass, bronze or stainless steel
- Furnished standard with No. 97 rosette and compression spring
- See Cam Chart on Page 6 for cam required
- 6 pin standard, for 7 pin specify "7 pin"
- No. 41 cylinder not available in 7 pin
- Mortise cylinder assemblies that are ordered without hardware are supplied with standard SARGENT offset cam 13-0660, except for 11-41 which uses 13-0664
- Cylinder finishes: 3, 4, 9, 10, 10B, 10BL, 20D, 26, 26D, 32, 32D
- Plug finishes: 4, 15

	Length under cylinder head									
Cylinder No.	**41**	**42**	**43**	**44**	**46**	**48**	**50**	**52**	**54**	**56**
Dim. X	1-1/8" (29mm)	1-1/4" (32mm)	1-3/8" (35mm)	1-1/2" (38mm)	1-3/4" (44mm)	2" (51mm)	2-1/4" (57mm)	2-1/2" (64mm)	2-3/4" (70mm)	3" (76mm)

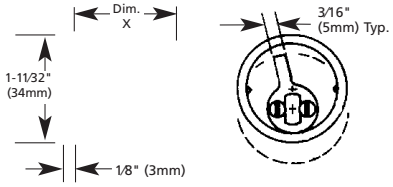

50-40 Series Hotel Type Cylinder

Features same as standard 40 Series cylinders except for the following:
- For use with 8250 lock only
- 6 pin only
- Contact factory for compatibility requirements for existing 6 pin systems
- Uses only cam 13-2045
- Guest and Master keys will not project or retract deadbolt
- Emergency key only can project or retract deadbolt
- C Series keyways standard, specify if different keyway
- Length under cylinder head (Dim. X)
  50-42 1-1/4" (32mm)
  50-43 1-3/8" (35mm)
  50-44 1-1/2" (38mm)

78-40 Series Exposed Shell Only Cylinders

- Cylinder: Solid brass, 1-5/32" (29mm) diameter
- 6 pin standard, for 7 pin specify "7 pin"
- For use with SARGENT mortise locks with Escutcheon Trim (KE 3/4, LE 3/4) only
- See Function Table on Page 6 for cam required
- 78-41 6 pin; single cylinder function only
- 78-42 6 or 7 pin; single cylinder functions only
- 78-43 6 or 7 pin; all functions except 50
- Plug finishes: 4, 15

34 Series Rim Type Cylinder

- 27/32" (21mm) screw pattern for through-bolted SARGENT exit devices
- Cylinder: Solid brass
- Cap: Brass, bronze or stainless steel
- Furnished standard with No. 97 rosette and compression spring, "break-off" screws and back plate
- 6 pin standard, for 7 pin specify "7 pin"
- Horizontal tail piece only
- Cylinder finishes: 3, 4, 9, 10, 10B, 10BL, 20D, 26, 26D, 32, 32D
- Plug finishes: 4, 15

No. of Pins	Door Thickness	Dim. A (Min.)	Dim. B (Min.)
6	2-3/8" to 3-1/4" (60mm to 82mm)	1-1/16" (27mm)	2-3/8" (60mm)
7	2-1/2" to 3-1/2" (64mm to 89mm)	1-7/32" (31mm)	2-3/8" (60mm)

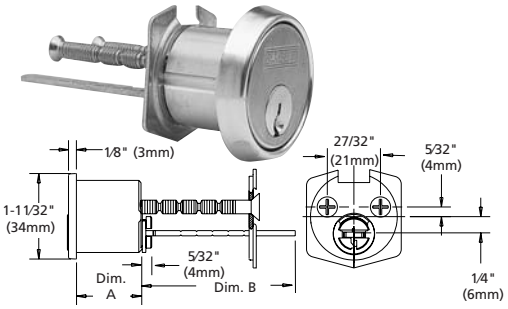

All cylinders standard 6 pin and supplied with 2 nickel silver keys. In cylinders ordered for 5 pin systems the (6th) last chamber will be empty. For cylinders in competitive keyways see Page 10. For 5 pin systems consult factory for loading information.

34 Rim/40 Series Mortise Cylinder Parts

Item	Description	Part Number	Where Used	Comment
1	Plug	See Table Below	40 Mortise & 34 Rim	
2	Cylinder Shell, Cap & Slide Assy.	See Table Below	40 Mortise & 34 Rim	Illustration Shows Slide Disassembled
3	Bottom Pin	See Table Page 13	40 Mortise & 34 Rim	
4	Master Pin	13-0062	40 Mortise & 34 Rim	Pin No. 10 (Length .260)
5	Top Pin	See Table Page 13	40 Mortise & 34 Rim	
6	Compression Spring	13-0265	40 Mortise & 34 Rim	
7	Cam	See Table Page 6	40 Mortise	
8	Screw	01-1121	40 Mortise	#3-48 x 5/16" (8mm) PH. FL.
9	Plug Retainer	13-0080	34 Rim	
10	Tail Piece	13-0085	34 Rim	
11	Cylinder Back Plate	13-0086	34 Rim	
12	Connecting Screws	13-0075	34 Rim	#12-24 x 2-5/8" (67mm)
12	Standard Connecting Screws	13-0074	34 Rim	#12-24 x 2-1/8" (54mm)
13	6 Pin Slide	13-0779	40 Mortise & 34 Rim	
13	7 Pin Slide	13-0780	40 Mortise & 34 Rim	

Standard Cylinders
(Hotel Function Not Shown)

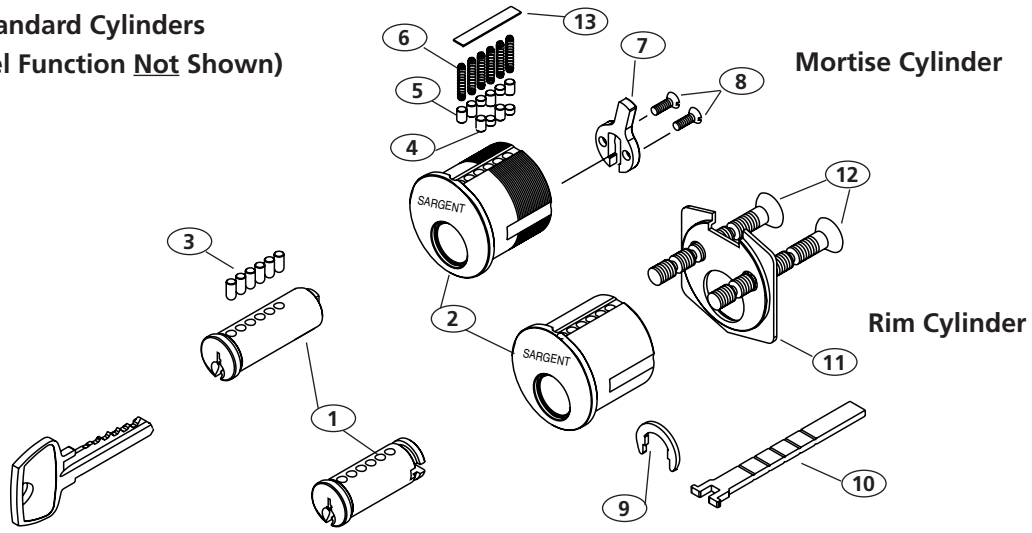

Mortise Cylinder

Rim Cylinder

No.	Cylinder Length	6 Pin Plug Part Number	7 Pin Plug Part Number	6 Pin Shell & Slide Assy. Part Number	7 Pin Shell & Slide Assy. Part Number
34	—	13-0090	13-0587	13-2069	13-2712
41	1-1/8" (29mm)	13-0401	N/A	13-2005	N/A
42	1-1/4" (32mm)	13-0402	13-0631	13-2006	13-2765
43	1-3/8" (35mm)	13-0403	13-0632	13-2007	13-2766
44	1-1/2" (38mm)	13-0404	13-0633	13-2008	13-2767
46	1-3/4" (44mm)	13-0405	13-0634	13-2009	13-2768
48	2" (51mm)	13-0406	13-0635	13-2010	13-2769
50	2-1/4" (57mm)	13-0407	13-0636	13-2011	13-2770
52	2-1/2" (64mm)	13-0408	13-0637	13-2012	13-2771
54	2-3/4" (70mm)	13-0409	13-0638	13-2013	13-2772
56	3" (76mm)	13-0474	13-0639	13-2382	13-2773

Cylinders & Components
35- Adjustable Front Mortise Cylinders
Cams For Standard Mortise Cylinders

SARGENT
1-800-727-5477
www.sargentlock.com

Adjustable Front Mortise Cylinder

- Cylinder: Brass, 1-5/32" (29mm) diameter
- Cap: Brass, bronze or stainless steel
- No cylinder ring or rosette is required
- Spring action front adjusts 1/16" (1.6mm) to assure proper mounting of cylinder
- Available with three different cap heights to accommodate various door and trim thicknesses
- Can be used with most trim (except escutcheon designs)
- Finishes: 3, 4, 9, 10, 10B, 10BL, 20D, 26, 26D, 32, 32D

35-40 Series Cylinder Cap Height Measurements

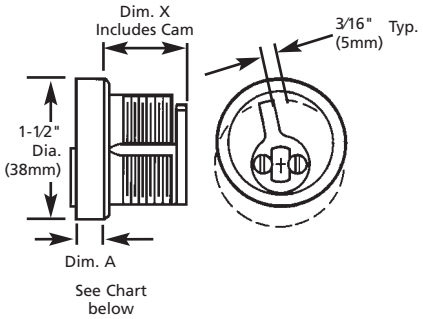

Cylinder No.		35-41	35-42	35-43	35-44	When ordering cylinders, use the following suffixes as required
Cap Size	Dim. A	Dim. X	Dim. X	Dim. X	Dim. X	
5	5/16" (8mm)	31/32" (25mm)	1-3/32" (28mm)	1-7/32" (31mm)	1-11/32" (34mm)	5
7	7/16" (11mm)	31/32" (25mm)	1-3/32" (28mm)	1-7/32" (31mm)	N/A	7
9	9/16" (14mm)	23/32" (18mm)	27/32" (21mm)	31/32" (25mm)	1-3/32" (28mm)	9

Cams For Conventional Mortise Cylinders* in SARGENT Keyways

13-0664

Standard open slotted cam provided on all 40 Series as standard except inside of 16, 92, and 50 functions

13-0665

Short cam for 92 and 16 functions inside only

13-0662

Closed cams for 22-Split key construction keying except inside of 16, 92, and 50 function

13-0663

Used for 22-16 & 92 inside function

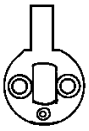

13-2045

Used only with 50-40 Series Hotel function cylinders

Miscellaneous Cams*

13-0512

Adams Rite 1850, 4700

13-0513

Adams Rite 4070, 4350, 4250, 4516, 4150

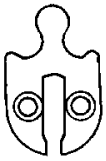

13-0921

SARGENT 4370 Series key switches Russwin #11

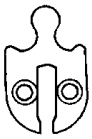

13-0938 - "Open"

Schlage "L"

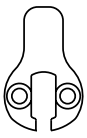

13-0097

"Open" Misc.

Cams for 6300 Removable Core (Factory assembled to housing)

13-0542

Standard SARGENT Cam

13-0806

92 and 16 Function Cam

13-1320

used on 63-8250

13-0832

Adams Rite 1850 4710

13-0833

Adams Rite 4050, 4150, 4250, 4350, 4070, 4516

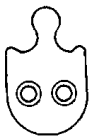

13-0922

4370 Series key switch Russwin #11 Cam

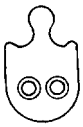

13-0928

Schlage "L"

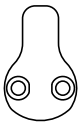

13-1251

Wide Straight

* Two screws required to attach cam, order 01-1121

SARGENT
1-800-727-5477
www.sargentlock.com

60- Prefix Disposable Plastic Core

- Used for doors that do not require key locking during the construction period
- Operate with coin or flat screw driver
- Two piece design allows for easy installation
- To order separately:
  13-0793 Top half
  13-0792 Bottom half

64- Prefix Construction Keyed Removable Core Keyed Cylinders

- The SARGENT 6400 removable brass construction core (order 64- prefix with SARGENT products) enables doors to be locked during project construction period
- Using 6400 cores prevents keys for the permanent key system from becoming available during the construction process
- After construction is completed, the 6400 brass cores are removed and replaced with 6300 keyed-permanent removable cores
- A special control key releases the locking sleeve of the cylinder core allowing immediate removal of the core
- Construction cores are all keyed alike in one KA keyset
- Furnished with 6 keys and 1 control as standard
- Plug face dimpled for easy identification

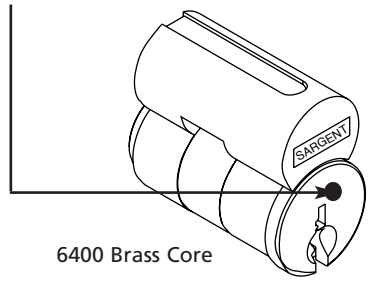

6400 Brass Core

63- Prefix Permanent Removable Core Cylinders

- SARGENT Removable Core Cylinders and Master Key Systems are available for a quick change of cylinders for increased security. It is unnecessary to remove the lock from a door to rekey the opening
- Special "control" key is used to release a locking cam allowing immediate removal of the core
- Available for use in many SARGENT products (Exit Devices, Mortise locks, Bored locks and padlocks)
- Can be master or grandmaster keyed
- 6 pin standard
- 1 bitted available for field keying
- 1 bitted cylinders supplied with 2 key blanks, pins and springs in chambers in 3 and 4 only
- Wide variety of master key systems available
- Permanent (keyed removable) cores supplied with hardware unless specified different

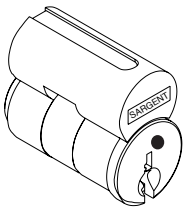

- Available in the following keyway families: A, B, C, G, H, K, L, N, R, and V
- Also available in the following single key sections: CR and S
- Finishes: 4, 15
- When ordering, use Cat # 6300; include finish and give all keying information
- Request Control Key (6272) if required

- 60-42 same as above but supplied with plastic disposable plastic core

65-6300 Unassembled Core Only

- Unassembled core for field rekeying. Includes Control Sleeve and two key blanks
- Springs and pins to be ordered separately (see Pages 14 &15)
- Finishes: 4, 15
- 2 key blanks provided

63-34 Rim Cylinder

- Housing: Solid brass
- Cap: Brass, bronze or stainless steel
- Furnished standard with No. 97 rosette and compression ring
- Includes the same tailpiece and screw hole pattern as the #34 cylinder
- Finishes: 3, 4, 10, 10BL, 20D, 26, 26D, 32, 32D

63-40 Series & 50-6343 (Hotel Function) Mortise Cylinders

- Cylinder: Solid brass 1-5/32" (29mm) diameter
- Cap: Brass, bronze and stainless steel
- See page 6 for cam options
- Available in the following lengths:

Cylinder #	63-42	63-43	63-44	63-46
Length	1-1/4" (32mm)	1-3/8" (35mm)	1-1/2" (38mm)	1-3/4" (44mm)

- Furnished standard with No. 97 rosette and compression ring
- Cam 13-1320 is permanently staked to 50- housing
- "C" series keyway is standard for 50-6343
- Other SARGENT keyways available
- Finishes: 3, 4, 9, 10, 10B, 10BL, 20D, 26, 26D, 32, 32D

6300 Series Parts Only

13-0795	Plug, Finishes: 4, 15
13-3424	Inner Shell & Slide Assy, Finishes: 4, 15
13-1074	Control Sleeve
01-0660	Plug retaining ring
13-0797	Slide

For pins, springs and keying kits see Pages 14 & 15.

SARGENT
1-800-727-5477
www.sargentlock.com

7300B Series Small Format Interchangeable Core Cylinders 6 & 7 Pin

- SARGENT Interchangeable Core Cylinders and Master Key Systems are available for a quick change of cylinders for increased security. It is unnecessary to remove the lock from the door to rekey the opening
- SARGENT 7300B Interchangeable Cores are available in SARGENT 4A and 4B keyways as well as the following standard competitor keyways: A, B, C, D, E, F, G, H, J, K, L, M. SARGENT will extend any key system after receipt of an existing bitting list from the end user
- New key systems are available in either 4A or 4B keyways. 4A in a 2 step system will be supplied standard on new systems
- A2 or A4 systems available
- U.S. Patent No. 6,079,240

7300B Keyed Interchangeable Core

- Supplied with two nickel silver keys as standard
- Face includes SARGENT logo
- 7300B (6 pin)
  7P-7300B (7 pin)
- If Control or Master key is required order 6282B x Keyway
- Finishes: 4, 15

65-7300B Uncombinated Interchangeable Cores

- Cores for field keying
- No pins, springs or key blanks provided
- No logo on face
- 65-7300B (6 pin)
  65-7P-7300B (7 pin)
- Finishes: 4, 15

65-7300B Shown

70- Prefix Disposable Plastic Construction Core For SFIC

- Used for those doors that do not require key locking during the construction period
- Operate with coin or flat screw driver
- Two piece design allows for easy installation
- To order separately:
  13-0964 Bottom half
  13-0965 Top half

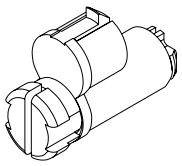

72- Prefix Brass Interchangeable Construction Core

- SARGENT 7200 Interchangeable brass construction core (order 72-prefix with your SARGENT products) enables doors to be locked during the project construction period
- Using 7200 cores prevents the keys to the permanent key system from becoming available during the construction process
- After construction is completed, the 7200 brass cores are removed and replaced with 7300 keyed-permanent interchangeable cores
- Plug face is blue for easy identification
- A special Control key (7272) releases the locking sleeve of the construction core and allows for immediate removal of the core
- Construction cores are 6 pin and keyed alike
- Six (6) change keys and one (1) Control key is included
- Cores shipped with hardware

Key Blanks/Cut Keys (Nickel Silver)

- Available in quantities of 100 each
- Same blank is cut for 6 and 7 pin systems
- Packed 50 per box
- SARGENT Keyways: 4A, 4B
  Competitors: A, B, C, D, E, F, G, H, J, K, L, M
- Order by 6285B x Keyway
- Cut Master key 6282B x Keyway

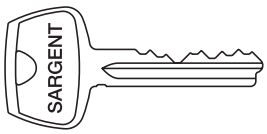

73-34 Rim Cylinder

- Brass cylinder and housing
- Furnished with No. 97 rosette, break off screws and back plate
- Housing accepts 6 or 7 pin core
- Mounting holes located to match SARGENT hardware

- Finishes: 3, 4, 26, 26D

73-40 Series Mortise Cylinders

- Two cylinder sizes
- #43, 1-3/8" (35mm) length under cylinder head including cam
  - 73-43 (6 pin)
  - 73-7P-43 (7 pin)
  - 73-43 housing less core
- #46, 1-3/4" (44mm) length under cylinder head including cam
  - 73-46 (6 pin)
  - 73-7P-46 (7 pin)
  - 70-46 housing less core
- 1-5/32" (29mm) diameter housing
- Furnished with KB-2 cylinder rosette as standard
- Cam is permanently staked to housing
- Housing accepts 6 or 7 pin cores
- Mortise cylinder cams operate current SARGENT hardware
- Hotel Function not available
- Finishes: 3, 4, 26, 26D

SARGENT
1-800-727-5477
www.sargentlock.com

51- Prefix Old Style Removable Core Cylinder

- SARGENT Removable Core Cylinders and Master Key Systems are available for a quick change of cylinders for increased security. It is unnecessary to remove the lock from the door to rekey the opening
- Special "control" key is used to release a locking cam to allow immediate removal of the core
- Available for use only in SARGENT products, such as exit devices or mortise locks, which use rim or mortise cylinders
- SARGENT Offset Cams only
- Available for existing systems only
- Can be master or grandmaster keyed

  Note: If ordering for existing construction key system, provide all keying information.
- Consult factory for existing system compatibility
- Plug finishes: 4, 15
- Finishes: 3, 4, 9, 10, 10B, 20D, 26, 26D, 32, 32D

Removable Core Cylinders

Mortise Type

Series	No. Pins	Length under cylinder head including cam				
		1-1/8" (29mm)	1-1/4" (32mm)	1-3/8" (35mm)	1-1/2" (38mm)	1-3/4" (44mm)
040 Cylinder	5	041	042	043	044	046
140 Cylinder	6	N/A	142	143	144	146
040 Core Only	5	5041	5042	5043	5044	5046
Core Only	6	N/A	5142	5143	5144	5146

Rim Type

Series	No. Pins	Maximum overall length
134-5 pin Cylinder	5	3-3/4" (95mm)
134-6 pin Cylinder	6	3-3/4" (95mm)

Furnished standard with No. 97 rosette, "break off" screws and back plate.

Rim Type "Core Only"

	No. Pins
5134-5 pin	5
5134-6 pin	6

Note: These cylinders have an additional chamber used for the control sleeve. Operating keys contain an extra cut position for working with control function.

52- Prefix Old Core Style Construction Removable

- A separate order for permanent cores, with keysets keying information, door and item numbers, should accompany the lockset order. The permanent cores will be shipped directly to the distributor and not to the job site.
- All locks ordered with removable construction core cylinders will be invoiced at the regular price established for 51- prefix
- A separate invoice will be issued to cover the permanent cores at prices listed for removable cores
- Plastic disposable cores not available

How to Order

Mortise	Add 52- prefix to removable core cylinder number (Example: 52-142) Not available for functions 50 and 52
Rim Type	Add 52- prefix to removable core cylinder number (Example: 52-134)

To order removable cores only for mortise and rim type cylinders, add 52- prefix to core designation (Example: 52-5142 or 52-5134)

SARGENT
1-800-727-5477
www.sargentlock.com

Conventional Mortise and Rim Cylinders

SARGENT offers cylinders in other manufacturers' keyways. They can be ordered as a prefix for hardware or separately by part numbers. The following product lines are available with SC- and SE- prefixes:

- #41 Mortise Cylinder applications only
  - 7800/8200 Mortise Locks
  - KP8200 Keypad Operated Product
  - 4870 Deadlock
  - 20, 30, 80 and 90 Series Exit Devices
- #34 Rim Cylinder applications
  - KP8877 Keypad Operated Products
  - 8877 Profile Series Access Control Products
  - 20, 30, 80 and 90 Series Exit Devices
- All cylinders 0 bitted and supplied with two brass key blanks as standard. Hotel function not available.
- Mortise and rim cylinders supplied without SARGENT logo on face of cylinder and with No. 97 rosette when ordered without hardware
- Mortise cylinders only supplied with SARGENT offset cam similar to 13-0664. Rim cylinders only with SARGENT mounting screw locations. Separate parts not available for these cylinders.
- Master keyed cylinders not available
- All mortise cylinders 1-1/8" (29mm) long with standard 1-5/32" shell diameter
- Finishes: 3, 4, 10, 10B, 26, 26D

	Keyway	
Cylinder Type	**Schlage "C"**	**Schlage "E"**
Mortise #41	13-3635	13-3636
Rim #34	13-3624	13-3625

How to Order

Part number x SC or SE #34 or 41 x Schlage keyway type
Example: 13-3635 x SC #41 x Schlage C keyway

Conventional Bored/Cylindrical Lock Cylinders

The following cylinders can be ordered in competitor's keyways.

- All cylinders 0 bitted and supplied with two brass key blanks as standard. Hotel function not available.
- Cylinders include tail pieces
- Finishes: 4, 15

	Keyway	
Lock Line	**Schlage "C"**	**Schlage "E"**
7, 10, T-Zone (11) & 6500	13-3613	13-3614
480 Deadlock	13-3651	13-3652
5	13-4116	13-4117
5500 in 04, 05 & 37 Functions	13-3662	13-3663
474 Deadbolt (Double Cylinder)	13-4121	13-4123
475 Deadbolt (Single Cylinder)	13-4120	13-4122

How to Order
Part number x SC or SE x finish Schlage keyway type
Example: 13-3614 x SE x 26 Schlage E keyway

124 Series Turn Lever

No.	124-41	124-42	124-43	124-44	124-46
Length Including Cam (Dim. x)	1-1⁄8" (29mm)	1-1⁄4" (32mm)	1-3⁄8" (35mm)	1-1⁄2" (38mm)	1-3⁄4" (44mm)

Cam No. Suffix	Description
None	Sizes 41 through 46 for standard offset SARGENT cam
-3	Sizes 41 through 46 x cam for inside of 16 and 92 mortise lock
-101	Sizes 41 through 46 x cam for Adams Rite 1850 lock
-104	Sizes 41 through 46 x cam for Adams Rite 4050, 4150, 4070, 4250 and 4350 locks

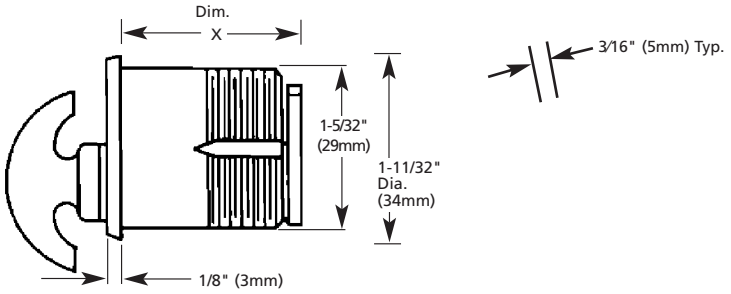

124 Series Turn Lever

- Used in mortise locks in lieu of cylinders when keyed cylinders are not required
- Furnished standard with No. 97 cylinder rosette when ordered separately
- Cylinder: Brass
- Turn lever: Brass or bronze
  Cap: Brass, bronze, stainless steel
- Finishes:
  4, 10B, 26D

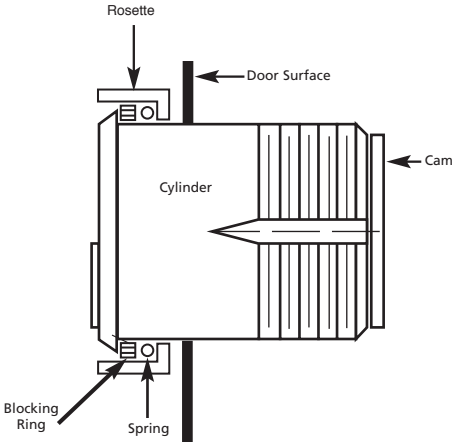

Crosscut illustration of rosette application

No. 1KB Rosette

- Used with 8200 Series mortise locks and No. 90 blocking rings when cylinders project from door
- Free spinning to protect cylinder from vandalism
- Furnished standard with 8200 LN and L rose design mortise trim
- Cast brass, bronze or stainless steel
- 1-1/2" (38mm) diameter, includes compression spring
- Projection from door:
  1KB-1 5/16" (8mm)
  1KB-2 7/16" (11mm)
  1KB-3 9/16" (14mm)
- Finishes: 3, 4, 10, 10B, 10BL, 20D, 26, 26D, 32, 32D

No. 97 Rosette

- Standard for cylinders ordered separately from hardware
- Standard for 7800 screwless knob trim
- Brass, bronze or stainless steel
- 1-11/16" diameter (43mm), 9/32" (7mm) projection, includes compression spring
- Finishes: 3, 4, 10, 10B, 10BL, 20D, 26, 26D, 32, 32D

No. 90 Blocking Ring

- Used with 1KB rosettes as spacer when mortise cylinder projects from face of door
- Brass, bronze or stainless steel
- 1-3/8" (35mm) diameter; 1/16" (1.6mm) to 3/8" (9mm) projection in 1/16" (1.6mm) increments. Specify size when ordering.
- Finishes: 3, 4, 10, 10B, 10BL, 20D, 26, 26D, 32, 32D

SARGENT
1-800-727-5477
www.sargentlock.com

21- Prefix Lost Ball Construction Keying

Cylinders ordered in SARGENT keyways with construction keying will include the 21- prefix Lost Ball feature as standard. This replaces the 22- split key, only available as additions to existing 22- mastered keyed systems. The 21- is not available with old or new style removable core (5100 & 6300s). If construction keying is required for removable cores, use 52- or 64- construction keyed cores.

With the lost ball option, construction keying is obtained without the nuisance of going back to each cylinder and removing the construction split key when the building gets turned over.

With this feature, the 21- cylinder is master keyed with 3 small ball bearings in one of the chambers. The plug is drilled in two places along both sides of the same chamber containing the balls. This allows the construction master key to be used, while leaving these balls in the chamber above the plug when the key is rotated. When it is time to void the construction key, simply using the change (day) key will allow these balls to fall into the holes in the plug. The construction master key will now no longer operate the lock.

Field construction (21- lost ball) keying can also be easily accomplished with the # 439 LOST BALL REKEYING KIT. The kit includes a drilling block, knurled pin, 500 balls and drill with collar.

Orders with 21- will have all change keys shipped separately from hardware.

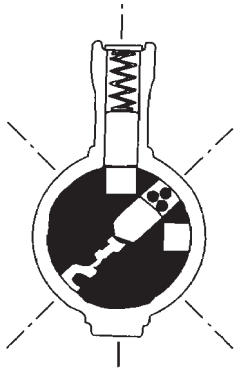

Cutaway cylinder showing construction master key being used. Note the two empty holes on either side of the chamber.

To Void Construction Key

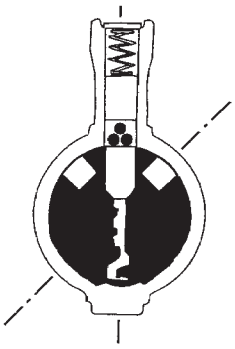

Change key inserted in cylinder.

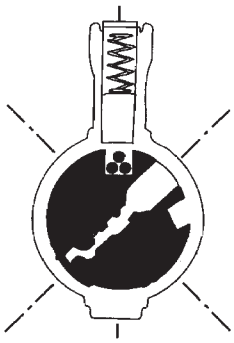

As change key rotates, construction balls fall into hole in the side of plug.

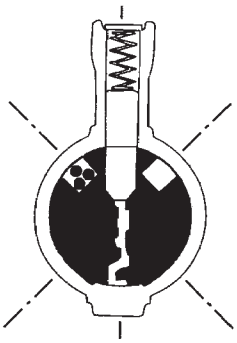

Change key rotated to position for extraction.

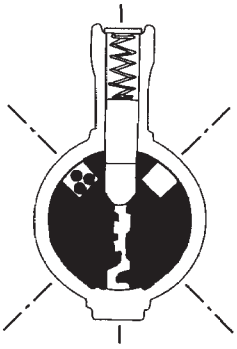

Construction key inserted after balls are trapped. Driver now extends into plug chamber. Construction key will not rotate.

22- Prefix Split Key Construction Keying

The 22- prefix for split-key construction keying is only available for **existing systems**. When construction is completed, each cylinder must have the construction split key removed. Orders with 22- prefix will have all change keys shipped separately from hardware.
Not available with XC or Signature cylinders, non-SARGENT keyways or with cylinders used in other manufacturers' locks.

439 Construction Keying Kit (Lost Ball)

The 439 construction keying kit is designed to allow field construction master keying of SARGENT conventional, Signature and XC cylinders.

Each kit includes:

1. Drilling block, P/N 13-0940
2. Drill bit, P/N 01-0030
3. Knurled pin, P/N 13-0941
4. Hex key, P/N 01-0650 (not shown)
5. Collar & Set screw Assy., P/N 13-3585
6. 500 each balls, P/N 13-1103 (not shown)

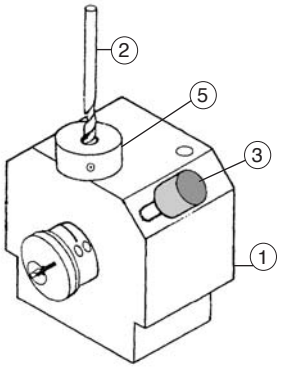

Drill block shown with plug being prepared for field construction keying.

Cylinders & Components
Bitting Dimensions, Pins and Springs

SARGENT
1-800-727-5477
www.sargentlock.com

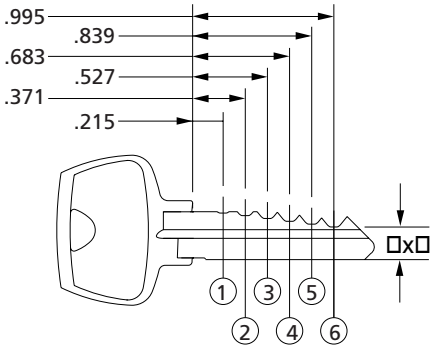

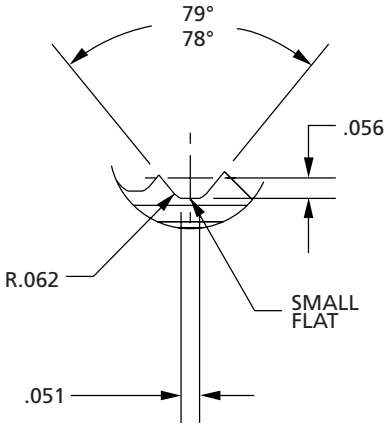

6 PIN POSITIONS Shown, depth and spacing are the same for 5 & 7 pin

Depth tolerance ± .002", spacing tolerance ± .001"

Cut#	1	2	3	4	5	6	7	8	9	10
X	.330	.310	.290	.270	.250	.230	.210	.190	.170	.150

Above bitting dimensions are for SARGENT cylinders in the following keyway families: A, B, C, G, H, K, L, M, N, R, V

Springs

13-0265 used in all cylinders <u>except</u> 3rd & 4th position of 6300 and 10-6300 cores.

13-0487 used in 3rd & 4th position of 6300, 10-6300 cores.

Brass Pins for SARGENT Keyways

Bottom Pins		Length	Master Pins		Length
SIZE #1	13-0064	.170	SIZE #2	13-0051	.040
SIZE #2	13-0065	.190	SIZE #3	13-0052	.060
SIZE #3	13-0066	.210	SIZE #4	13-0053	.080
SIZE #4	13-0067	.230	SIZE #5	13-0054	.100
SIZE #5	13-0068	.250	SIZE #6	13-0055	.120
SIZE #6	13-0069	.270	SIZE #7	13-0056	.140
SIZE #7	13-0070	.290	SIZE #8	13-0057	.160
SIZE #8	13-0071	.310	SIZE #9	13-0058	.180
SIZE #9	13-0072	.330	SIZE #10	13-0059	.200
SIZE #10	13-0073	.350	SIZE #11	13-0060	.220
			SIZE #12	13-0061	.240
			SIZE #13	13-0062	.260
All pins .115 diameter			SIZE #14	13-0063	.280

10-34 & 10-40 Signature UL 437 Pins

Hardened stainless steel bottom pins used only in the 1st chamber of 10-UL 40 Series mortise cylinders & 10-UL 34 Series rim cylinders.

SIZE #1	13-1210
SIZE #2	13-1211
SIZE #3	13-1212
SIZE #4	13-1213
SIZE #5	13-1214
SIZE #6	13-1215
SIZE #7	13-1216
SIZE #8	13-1217
SIZE #9	13-1218

Stainless top driver 13-1223 used in 1st position only 10-UL 40 Series and 10-UL 34 Series cylinders.

6300 & 10-6300 Removable Core Hollow Top Pins

Different top pins are used only in the 3rd and 4th positions of 6300, 10-6300 Removable cores. All other chambers use standard top pins.

SIZE #3	13-1229
SIZE #4	13-1234
SIZE #5	13-1235
SIZE #6	13-1236
SIZE #7	13-1237
SIZE #8	13-1238
SIZE #9	13-1239
SIZE #10	13-1240

Pins Supplied with Keying Kits

	437C/437S		437RC/UL
Size #	Bottom Pins	Master Pins	Hollow Top Pins
1	13-0064		
2	13-0065	13-0051	
3	13-0066	13-0052	13-1229
4	13-0067	13-0053	13-1234
5	13-0068	13-0054	13-1235
6	13-0069	13-0055	13-1236
7	13-0070	13-0056	13-1237
8	13-0071	13-0057	13-1238
9	13-0072	13-0058	13-1239
10	13-0073	13-0059	13-1240
11		13-0060	
12		13-0061	
13		13-0062	
14		13-0063	

SARGENT
1-800-727-5477
www.sargentlock.com

437C Conventional Keying Kit

This kit includes the brass pins, springs and tools needed to rekey SARGENT conventional cylinders. This heavy duty steel kit prevents pins from mixing. The kit includes 100 each of top springs 13-0265 and 100 each of bottom and master pins used in the following multi-family keyways: LA, RA, HA, CA, AA, BA, GA, KA, NA and VA.

NOTE: When repinning SARGENT 6300 removable core cylinders, the 437RC/UL supplemental pinning kit is required.

Tools included with kit are:

- Tweezers, 13-0498
- Bitting Gauge #435
- Loading Thimble ("Plug Holder" LT2)
- Loading Rod for 6, 8, 10, 11, mortise & rim cylinders, 13-1034
- Loading Rod for 480, 470, 460 and 6300 Cores, 13-1035
- Loading Rod Blades 13-1138 and 13-1037
- See Table on Page 13 for pins included

When pins are sold separately they are packaged in easy to see and use foil & plastic packages in quantities of 100 per size.

437S Signature Keying Kit

Used to service SARGENT Signature cylinders. Includes all of the same components as the 437C plus:

- 100 Blocking Bar springs, 13-0986
- 10 Each Blocking Bars, 13-1109
- 1 Each Field Service Tool, 13-3916

NOTE: When repinning 10-6300 Signature removable core cylinders, the 437RC/UL supplemental pinning kit is required.

437 RC/UL Removable Core Keying Kit

Use with the 437C or 437S kit. Includes additional pins to repin SARGENT 6300 and 10-6300 removable core cylinders.

The kit includes special hollow top pins and springs which are used in the 3rd and 4th chambers only to allow for smoother operation.

These pins are in the same increments as standard pins.

Each kit includes:

- 100 each hollow top pin springs, 13-0487
- 50 each cylinder retainers, 01-0660
- 50 each (hollow top pins). See Table on Page 13.

10-34 and 10-40 Series Signature UL437 Pins

The 437 RC/UL kit has extra room for optional hardened stainless steel bottom pins used when repinning SARGENT Signature UL437 Listed cylinders. These are ordered separately in quantities of 25. See Table on Page 13.

Depth Key Sets

Used for manual code key cutting. Each set includes 10 each SARGENT unwarded 6 pin keys. Each different key is cut with all the same bittings from 0 through 9.
Order as "Depthkeys".

5 Pin		6 Pin		7 Pin	
Key Blank	Key Section	Key Blank	Key Section	Key Blank	Key Section
265	U R S	6265	U R S	7270	LD LH LM LDH LDM LHM LN RD RH RM RDH RDM RHM RN
270	LD LH LM LDH LDM LHM LN RD RH RM RDH RDM RHM RN	6270	HD LD HH LH HM LM HDH LDH HDM LHM LHM LN RD RH RM RDH RDM RHM RN	7273	CD CH CM CDH CHM CN
273	CD CH CM CDH CHM CN	6273	CD CH CM CDH CHM CN	7275	LA LB LC LE LF LG LJ LK LL RA RB RC RE RF RG RJ RK RL
275	S	6275	HA LA HB LB HC LC HE LE HF LF HG LG HJ LJ HK LK HL LL RA RB RC RE RF RG RJ RK RL	7278	CA CB CC CE CF CG CJ CK CL CR
275	LA LB LC LE LF LG LJ LK LL RA RB RC RE RF RG RJ RK RL				
278	CA CB CC CE CF CG CJ CK CL CR	6278	CA CB CC CE CF CG CJ CK CL CR		

For Multiplex Masterkey Systems (L keyway family shown, others similar)

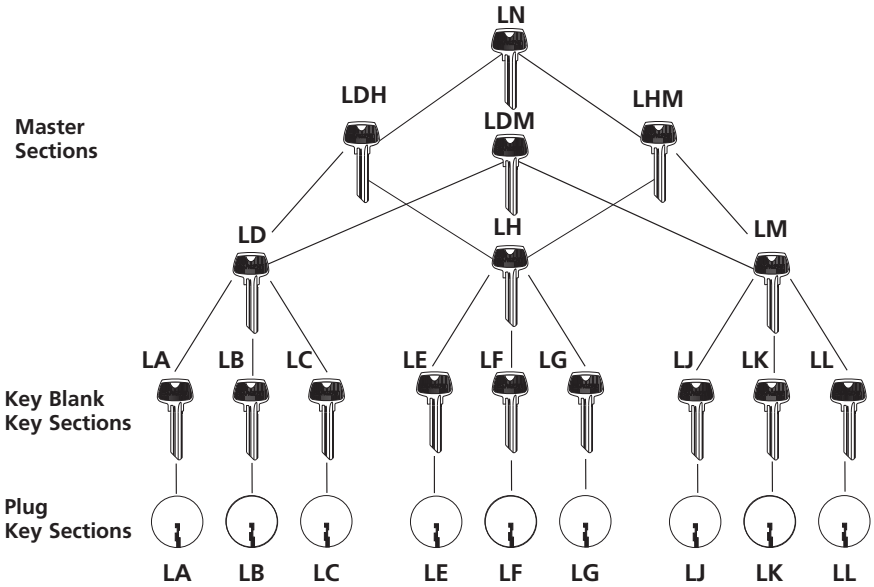

Multi Keyway Systems

L –	System	Stock Keyways
C –	System	Hotel Keyway (Furnished in Large Bow only)
H –	System	Contract Master Key Systems
R –	System	Contract MasterKey Systems

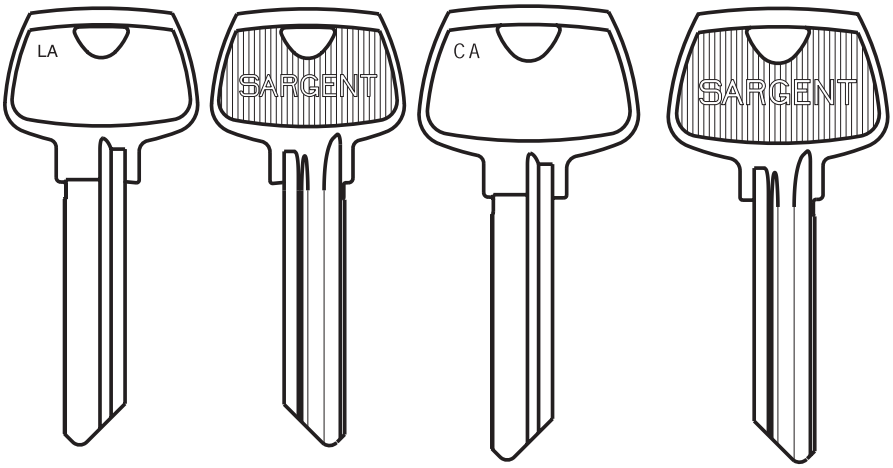

Standard 6 pin shown

Large Bow approximately 15% larger than standard bow, 6 pin shown. Provided for SARGENT "C" family as standard.

Single Keyway Sections

R Section
S Section
U Section
CR Section

Restricted Keyways: Restricted keyways are SARGENT (factory) controlled geographically to limit sales and prevent unauthorized key duplication.

For availability of restricted keyways and keysections, contact SARGENT Key Records Department.

Orders for restricted keyway systems, key blanks and cylinders, require a letter of authorization from the system owner.

SARGENT
1-800-727-5477
www.sargentlock.com

Visual Key Control (Stamping)

To allow for easier key and cylinder identification, SARGENT offers the option for permanent stamping of keys and/or cylinder with industry standard alpha-numeric keyset symbols.

Non-visual key control stamped change (day) keys include bitting numbers as standard, (Item A) unless requested to be omitted on the order. Signature and visual key control change keys are stamped with keyset symbols.

Master level keys do not include bitting numbers. Master level keys include system register numbers stamped on the first line, and the standard visual key control designations on the second line (Item B).

Up to 7 characters available for permanent stamping for Visual Key Control

- Key and cylinder identified by industry standard alpha-numeric keyset symbols
- Easy visual identification on the face of the plug (Item C or Item G)
- Concealed stamping on mortise and rim shells available (Item D)
- Cylinder-slide stamping only available on 5100 and 6300 SARGENT removable cores only (Item E)
- Core side engraving available for 7300B Series up to 7 characters (Item F)
- Special key stampings available, such as "DO NOT DUPLICATE" or "CITY OF PHOENIX"
- XC and Signature cylinders not available with visual plug stamping
- XC and Signature mortise or rim shells available with concealed shell stamping (Item D) only
- Signature removable cores 10-6300 available with cylinder slide stamping (Item E)

NOTE: SARGENT will stamp alternate identity codes whenever requested. If the Visual Key Control stamping is not wanted, an alternate code for stamping the individual identity of the Master Level Keys can be substituted.

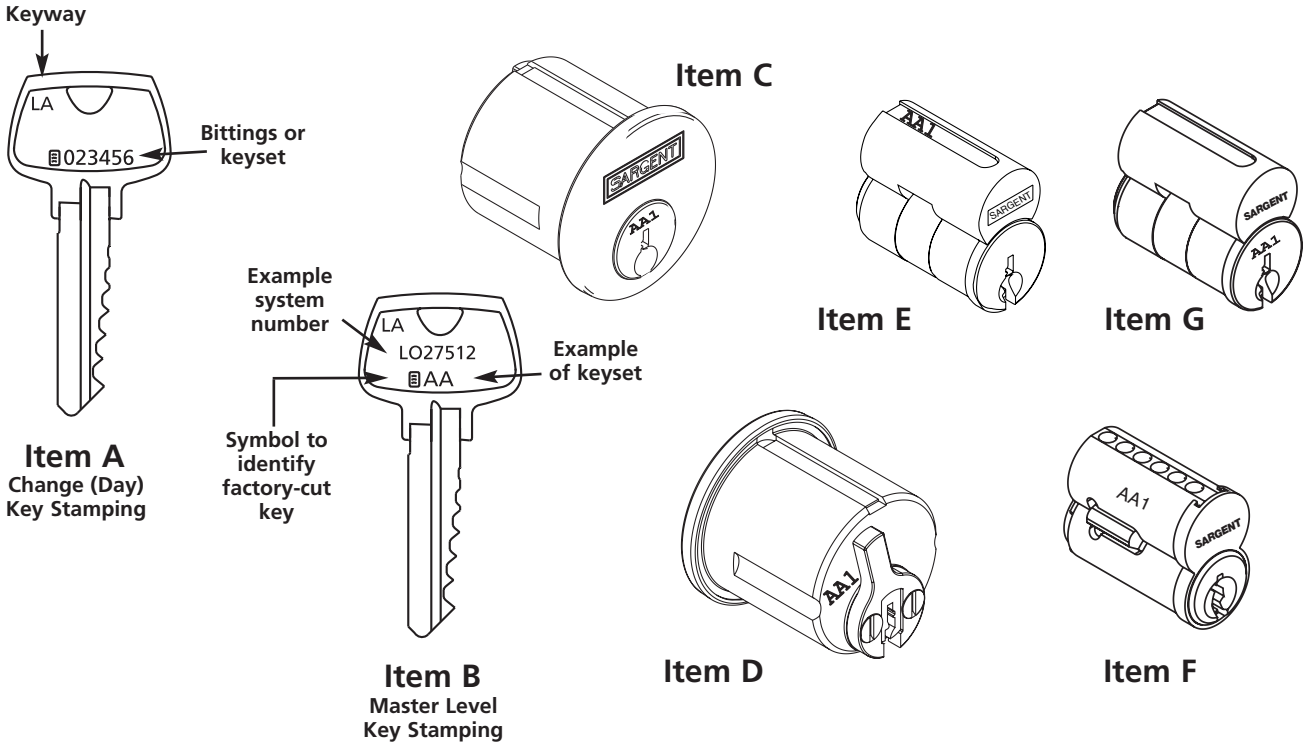

Tamper Proof Packaging

For the highest level of security for the end user, Tamper Proof Packaging is used on all Master Keys, Signature key blanks and all restricted key blanks. This heat sealed shrink wrap identified with "SARGENT Sealed For Your Security" provides assurance of the integrity of the factory generated key system.

SARGENT
1-800-727-5477
www.sargentlock.com

SARGENT requires all orders containing Master Keying details to be submitted using the industry standard D.H.I. ANSI/BHMA format. Key Symbols used on a master keyed order require combinations of letters and/or letters and numbers.

For complete details on proper structuring format of key symbols refer to:

D.H.I. Handbook Section 8 Finish Hardware KEYING SYSTEMS AND NOMENCLATURE or,
ANSI/BHMA Standard A156.28, AMERICAN NATIONAL STANDARDS FOR KEYING SYSTEMS.

Or contact SARGENT for assistance.

Basic Keying Terms

Keys and terms	Abbreviation	Definition
Change key	CK	Individual lock key
Masterkey	MK	Operates any given quantity of cylinders with different key changes
Grand Masterkey	GMK	Operates all individual locks already operated by masterkey(s)
Great Grand Masterkey	GGMK	Operates all locks under the various masterkey(s) and grand master key(s) already established
Emergency Key	EMK	Operates hotel locks having shut out feature which blocks entry by all other keys
Construction key	CMK	Operates all cylinders designated for a temporary period during construction
Control Key	CTL	Key to install or remove interchangeable or removable cores
Keyway	KWY	Broaching in a cylinder plug
Key section	KWY	Sidewarding on key to match broaching in plug
Single keyed	SKD	Cylinders operated by their change key only; not operated by any master key

Cylinder Terms

ALOA* adopted terms	Alternate terms
Shell	Cylinder body, Cylinder shell
Plug	Barrel, Cylinder barrel
Tail Piece	Connecting bar
Bottom Pins	Key pin, Ball end pins
Master Pins	Splits, Chips
Top Pins	Drivers
Change Key	Day key
Key Cut	Bit

* Associated Locksmiths of America

Examples of Master Key System Levels and Symbol Structure**

Level 2

Simple Master Key

Master Key	AA
Change Keys	1AA
	2AA
	3AA

Level 3

Grand Master Key A

Master Key	AA	Master Key	AB
Change Keys	AA1	Change Keys	AB1
	AA2		AB2
	AA3		AB3

Level 4

Great Grand Master Key GGM

Grand Master Key A				Grand Master Key B			
Master Key	AA	Master Key	AB	Master Key	BA	Master Key	BB
Change Keys	AA1	Change Keys	AB1	Change Keys	BA1	Change Keys	BB1
	AA2		AB2		BA2		BB2
	AA3		AB3		BA3		BB3

** Master key system levels greater than Level 4 are not recommended. Contact SARGENT Key Records for additional information.

ESSEX™
THE TOTAL OPENINGS PEOPLE

SARGENT Manufacturing Company • 100 Sargent Drive • P.O. Box 9725 • New Haven • CT 06536-0915
Phone: 800-727-5477 • Fax: 888-863-5054 • Web site: www.sargentlock.com
SARGENT of Canada • Phone: 905-940-2040 • Fax: 905-940-3242 • Web site: www.sargentcanada.ca

Founded in 1864, SARGENT® is a market leader in locksets, cylinders, door closers, exit devices, electro-mechanical products and access control systems for new construction, renovation and replacement applications. The company's customer base includes commercial construction, institutional and industrial markets.

The ASSA ABLOY Group is the world's leading manufacturer and supplier of locking solutions, dedicated to satisfying end-user needs for security, safety and convenience.

ASSA ABLOY

An ASSA ABLOY Group company