SARGENT®

1430/1431 Series Powerglide® Door Closers

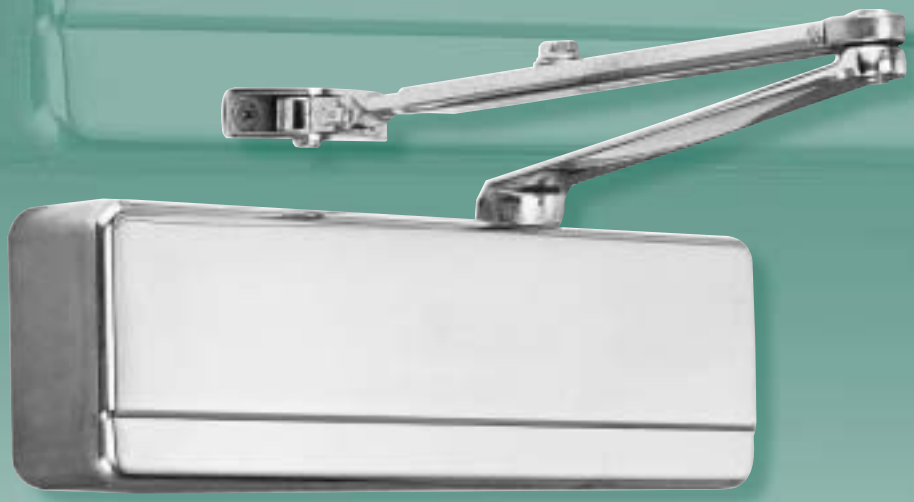

An ASSA ABLOY Group company

ASSA ABLOY

1430/1431 Series Powerglide® Door Closers

SARGENT
1-800-727-5477
www.sargentlock.com

Table of Contents

	Page
Cutaway Illustrations and Features	1
How to Select a Proper Closer	2
ADA Compliance	3
General Information	4
1430 Top Jamb Applications	5-7
1430 Standard Applications	8-9
1430 Parallel Arm Applications	10-13
1430 Track Type Applications	14
How to Order	15
Architectural Specification	16

The Powerglide® line of surface and concealed door closers has been engineered to meet the demands of the most complex requirements of architects and building owners. All series compliment each other, and together offer a complete line for interior and exterior doors. As a member of the Powerglide® closer family, the 1430 series offers superb efficiency and flexibility...so important to today's architectural concepts. Highly sophisticated climatic control systems and complicated traffic patterns demand that buildings be equipped with just the right closer on every door; to maintain a uniform, contemporary look...select and specify SARGENT®.

1430/1431 Series Powerglide® Door Closers Features

SARGENT
1-800-727-5477
www.sargentlock.com

POWERGLIDE® Door Closers

- ANSI/BHMA A156.4 Grade 1
- Conforms to standards UL 10C and UBC 7-2 (1997). Positive Pressure Fire Test
- 10-year warranty
- Versatile mounting applications permit standard, top jamb, parallel and track installations
- Adjustable Spring Power allows the 1430 closers a size range of 3 through 6. They are adjusted to size 3 before leaving the factory. The 1431 closers are adjustable from size 1 through 4. They are adjusted to size 1 before leaving the factory
- Full Rack and Pinion provides control from the full open position
- High performance aluminum body is constructed from a carefully selected aluminum silicon alloy to accommodate the door closer characteristics increasing the body strength and wear resistance
- Total engineering concept has provided an extremely efficient closer giving increased closing power with today's required lower opening forces
- ADA requirements are met easily with the 1431 model and the 1430 model in selected applications
- Key control valves offer separate regulating for door speed, latching, backcheck and optional delayed action. Each valve is labeled for easy identification
- All control valves are easily accessible located on the front of the closer body
- All valves are controlled by a 1/8" Allen wrench to discourage tampering
- Patent pending valve design offers the ultimate weather compensating feature
- Adjustable backcheck, standard, protects the door and hardware from damage during the opening cycle
- Adjustable delayed action, optional, permits easy access for the physically impaired individual
- Standard pressure relief valves for both the backcheck and delayed action features protect the closer seals and all hardware from excessive force
- High impact non corrosive covers are manufactured from strong impact resistant material that is flame retardant (metal covers optional). All covers secured by machine screws
- Heavy duty forged steel arms are finely finished and interchangeable between the 1430 closer and SARGENT's 1250, 250 and 350 closers series. The cold formed arms (RO & RP9) are unique to the 1430 series and not interchangeable with the other closers
- Easily retrofits existing 1230/1231 Series installations

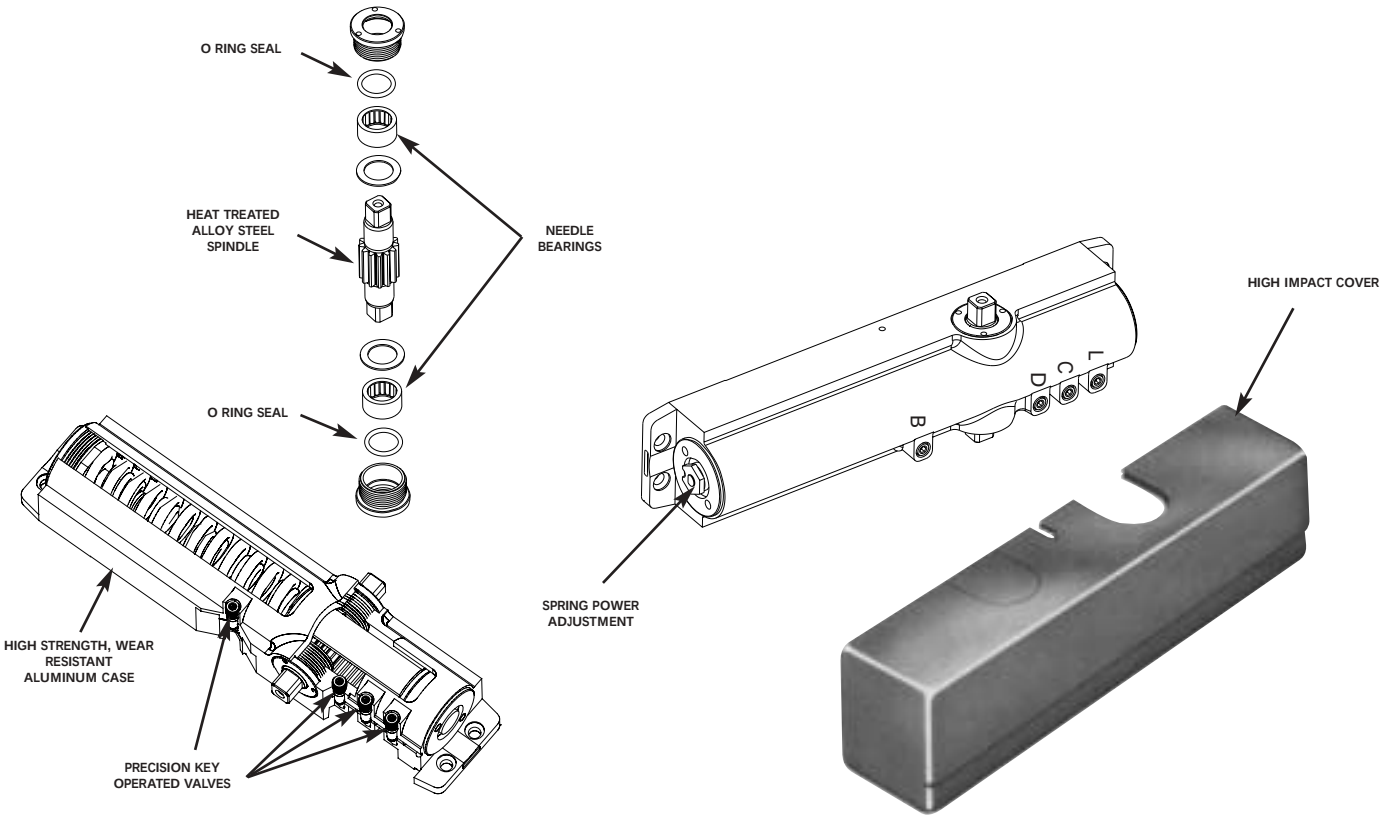

1430/1431 Series Powerglide® Door Closers
How to Select the Proper Closer

SARGENT
1-800-727-5477
www.sargentlock.com

Analyze all door requirements as follows:

1. **Size and weight of door**

   The door closers in this catalog are non-sized so that closing force can be adjusted in the field to accommodate various door sizes and weights.

2. **Interior application**

   Where possible the standard application should be used. This mounting is the most efficient in terms of door control and provides the most closing power.

3. **Exterior application**

   Handicapped closers should not be used on exterior doors.

   Exterior doors require greater closing forces because of draft and wind conditions. To place the closer out of the weather on exterior doors, the top jamb, corner bracket or parallel arm application should be used.

4. **Degree of opening**

   A closer should permit the door to open the maximum degree of swing permitted by door trim and wall conditions. This permits proper traffic flow and alleviates unnecessary stress to the door, the frame and the hardware.

5. **Function**

   Closers can be equipped with special arms such as hold-open, positive stop or fusible link hold-open where necessary.

6. **Special conditions**

   The Template Book should be consulted when using special hinges, door pivots, overhead holders or other specialized hardware. When not found in the Template Book, custom templates are available. Consult the factory!

Standard Application
1430/1431 Series

Push Side Track Type Application
1430 Series

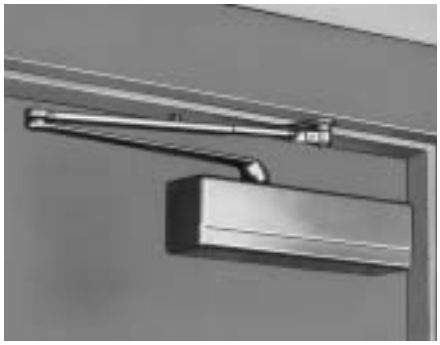

Parallel Arm Application
1430/1431 Series

Pull Side Track Type Application
1430 Series

Top Jamb Application
1430/1431 Series

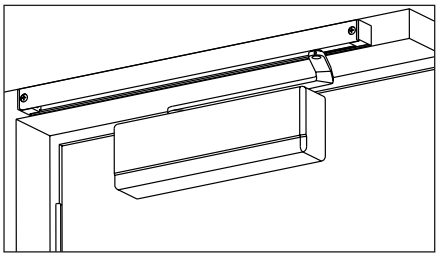

Double Egress Application
1430 OD Arm Shown

The selection of the proper door closer, its arm and its application position on the door are important considerations. Allowing the maximum degree of door opening minimizes excessive force on the entire door opening, extending its life!

1430/1431 Series Powerglide® Door Closers ADA Compliance

SARGENT
1-800-727-5477
www.sargentlock.com

1430/1431 Designed to Aid the Physically Challenged

The 1431 door closer is designed to meet the opening force requirements of the Americans with Disabilities Act. A special lighter spring affording easier access is used. Various field conditions that exist may make the use of the lighter spring product ineffective. The 1431 is not recommended for use where excessive draft and pressure conditions exist or when extra heavy doors are used. Under those conditions, meeting ADA requirements can be achieved with the use of the standard 1430 door closer. Refer to the closer selection chart for assistance in selecting the proper product. The 1430 series meets ANSI A117.1.

Closer Selection Chart to meet Americans with Disabilities Act

In selecting the correct closer, normal draft conditions and frequency of usage should be considered. The hardware specifier's judgment should be relied upon where abnormal conditions prevail. When door closers are used on fire doors, they shall have the minimum opening force allowable by the authority having jurisdiction.

	Standard Application		Parallel Application		Top Jamb Application	
Door Width	**120° Mtg**	**180° Mtg**	**120° Mtg**	**180° Mtg**	**120° Mtg**	**180° Mtg**
2/8	1431	1431	1431	1431	1431	1431
3/2	1431	1431	1431	1430	1431	1431
3/8	1431	1431	1430	1430	1431	1431
4/0	1431	1430	1430	1430	1431	1430
Over 4/0	1430	1430	1430	1430	1430	1430

Factors to Consider

- Door Weight
- Door Width
- Excessive Draft Pressure
- Sound & Smoke Seal

Note

- 1431 closers are not for use on exterior doors
- 1431 track applications are **not available**

1430/1431 Series Powerglide® Door Closers
General Information
Controlling Door Operation

SARGENT
1-800-727-5477
www.sargentlock.com

Door Opening Cycle

The door opening cycle compresses the springs and positions the fluid to control the other cycles.

Backcheck

The backcheck cycle is controlled by the backcheck valve. This cycle enables the closer to slow the opening swing of the door. This is a standard feature of all SARGENT 1430/1431 Series Closers. It should be stopped by a wall, floor or SARGENT overhead stop.

Delayed Action Cycle

The delayed action cycle is controlled by the delayed action valve. This is an option that slows the speed of the closer through the cycle arc to an almost imperceptible movement. This allows more time for those with walkers or wheel chairs to pass through the opening. The delayed action feature is furnished with backcheck as standard.

To order: Suffix DA to the closer 1430 DA x O x EN

Adjustable Spring Feature

The 1430/1431 Series Closers provide adjustable spring power to accommodate various installations.

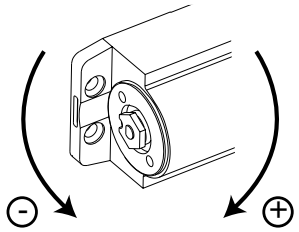

Door Closing and Latching Cycles

Two separate valves control the door closing and latching speeds. The closing cycle controls the speed of door closing from the full opened position to approximately five inches from the closed position. The latching cycle controls this last five inches.

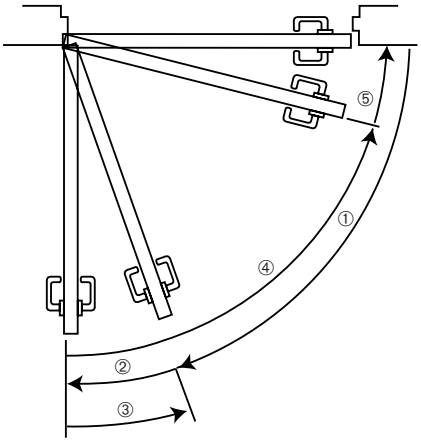

1. Opening Cycle
2. Backcheck Cycle
3. Delayed Action Cycle
4. Closing Cycle
5. Latching Cycle

Arm Leverage Adjustments

The 1430/1431 Series Door Closers have the provision to adjust the leverage of the "O", "RO", "OLC", "OZ", "OZA", "F", "FZ" and "FZA" arms by changing the pivot position of the arm in the foot. The foot itself does not have to be removed from the door or jamb.

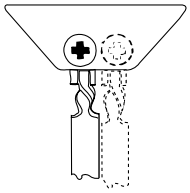

ANSI Specifications

The 1430/1431 Series Door Closers are certified in accordance to ANSI/BHMA Standard A156.4 Grade 1.

Underwriters Laboratories and "UL Listed to Canadian safety standards" Listing SARGENT 1430/1431 Series Door Closers have been listed by the Underwriters Laboratories, Inc. as follows:

"For Self-Closing Doors without hold-open feature"

"For automatic doors with hold-open arm embodying fusible link release."

Conforms to standards UL 10C and UBC 7-2 (1997). Positive Pressure Fire Test

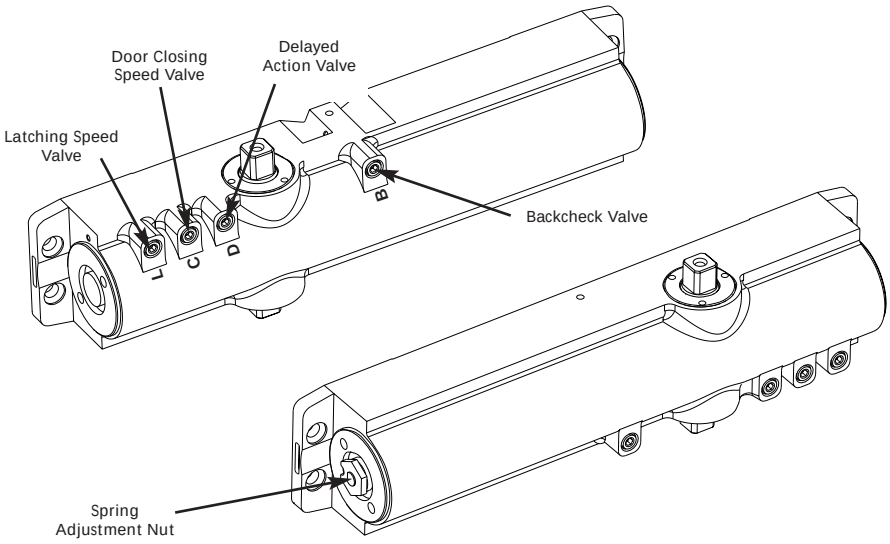

1430/1431 Series Powerglide® Door Closers Top Jamb Application

SARGENT
1-800-727-5477
www.sargentlock.com

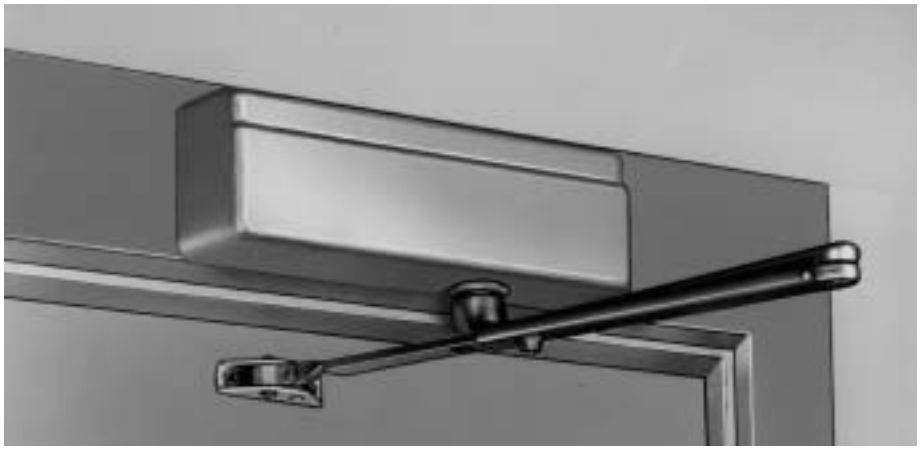

Closer is mounted inverted on the frame face above stop side of door. As door opens, closer arm swings with the door.

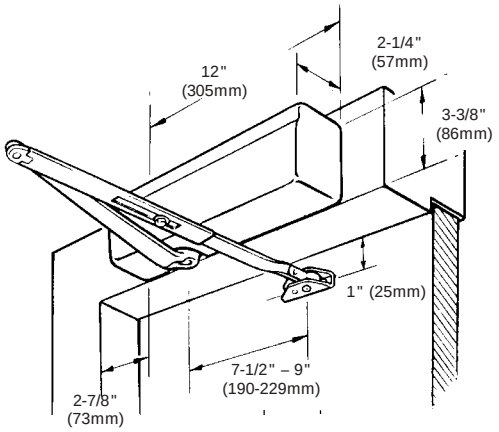

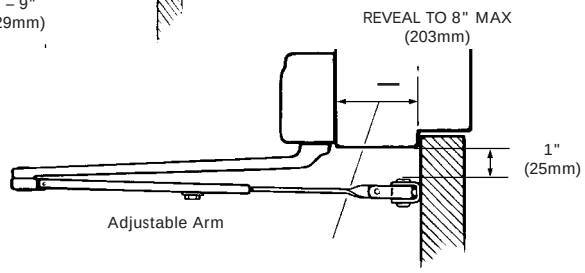

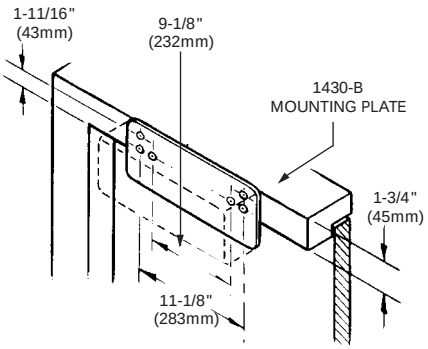

For General Use on

- Interior Doors – opening either in or out
- Exterior Doors – opening out

Covers

- High impact non-corrosive, flame retardant cover standard
- Standard cover projects 2-5/16" (59mm) from door face
- Optional metal covers use the same templating and projects 2-7/16" (62mm) from door face
- All covers secured by machine screws

Mounting

For reveals to 2" (51mm) maximum

- Maximum door opening with "O" Arm -180°
- Hold open range with "H" Arm- 80° - 180°
- Hold open range with "F" Arm- 80° - 130°

For reveals from 2-1/8" (54mm) to 5" (127mm) maximum

- Maximum door opening with "OZ" Arm -140°
- Hold open range with "HZ" Arm- 80° - 140°
- Hold open range with "FZ" Arm- 80° - 130°

For reveals from 5-1/8" (130mm) to 8" (203mm) maximum

- Maximum door opening with "OZA" Arm-140°
- Hold open range with "HZA" Arm- 80° - 130°
- Hold open range with "FZA Arm"- 80° - 130°

Backcheck

- Backcheck is designed to start at approximately 70° door opening. **Not to be used as a positive stop**

Minimum Door Rail Required to Mount Closer Foot

- 1-7/8" When auxiliary overhead door holders are used, dimension will vary depending on type and make of holder

Minimum Frame Face Required to Mount Closer Body

- 1-3/4" Minimum frame face required to mount closer body

1430 B Mounting Plate

- Fits right and left hand doors
- Accommodate most auxiliary overhead door holders (top jamb application). Also required for low ceiling conditions
- Plate mounting screw included

Thru Bolts and Mortise Nuts

- Available on request for 1-3/4" thick doors as standard. Use Suffix TB
- Available for 1-3/8" thick doors, specify

25-O Regular Arm (Inverted)

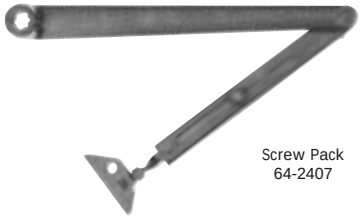

- Forged Steel Arm 11-1/4" (286mm) long
- For reveal depths up to 2" (51mm)
- Arm is not handed
- Permits 180° door opening

Order as 25-O x finish for complete arm assembly
25-O Includes: 63-2607 -Main arm and link assy.
63-2216 -Foot assembly

25-RO Regular Arm (Inverted)

- Cold Formed Steel Arm 11-1/4" (286mm) long
- For reveal depths up to 2" (51mm)
- Arm is not handed
- Permits 180° door opening

Order as 25-RO x finish for complete arm assembly
25-RO Includes: 63-3396 -Main arm and link assy.
63-2216 -Foot assembly

25-OZ Regular Arm (Inverted for Deep Reveal)

- Forged Steel Arm 11-1/4" (286mm) long
- Required for reveals 2-1/8" (54mm) to 5" (127mm)
- Arm is not handed
- Permits 140° door opening

Order as 25-OZ x finish for complete arm assembly
25-OZ Includes: 63-2607-Main arm and link assy.
63-2217-Foot assembly

25-OZA Regular Arm (Inverted for Deep Reveal)

- Forged Steel Arm 11-1/4" (286mm) long
- Required for reveals 5-1/8" (130mm) to 8" (203mm) reveal depths
- Arm is not handed
- Permits 140° door opening

Order as 25-OZA x finish for complete arm assembly
25-OZA Includes:
63-2607 -Main arm and link assembly
63-2218 -Foot assembly

25-H 90°-180°–Holder Arm (Inverted)

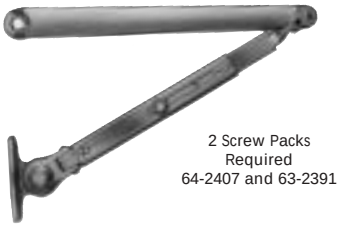

- Forged Steel Arm 11-1/4" (286mm) long
- For reveals up to 2" (51mm)
- Non-handed adjustable friction holder
- Permits 180° door opening

Order as 25-H x finish for complete arm assembly
25-H Includes: 63-2229 -Main arm and swivel assembly
61-2303 -Foot assembly

25-HZ Holder Arm (For Deep Reveal)

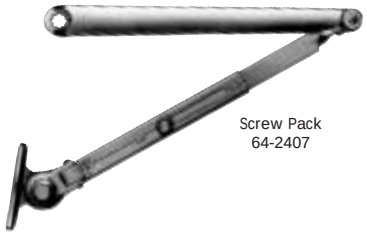

- Forged Steel Arm 11-1/4" (286mm) long
- For reveal up to 2-1/8" (54mm) to 5" (127mm)
- Non-handed adjustable friction holder
- Permits 140° door opening

Order as 25-HZ x finish for complete arm assy.
25-HZ Includes: 63-2230 -Main arm and swivel assembly
61-2303 -Foot assembly

25-FZ FUSIBLE LINK HOLDER ARM WITH 160°F or 125°F Fusible link

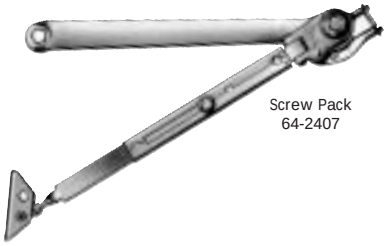

(Inverted for Deep Reveal)

- Forged Steel Arm 11-1/4" (286mm) long
- For reveals 2-1/8" (54mm) to 5" (127mm)
- Handed adjustable friction holder
- Permits 140° door opening
- 160° F link standard
- Specify 125° F link only when required

Order as 25 R-FZ for right hand and 25 L-FZ for left hand x finish and link degree for complete arm assembly
25-FZ Includes: 63-2240 -Main arm and link assembly (L.H.)

25-F Fusible Link Holder Arm with 160°F or 125°F Fusible Link

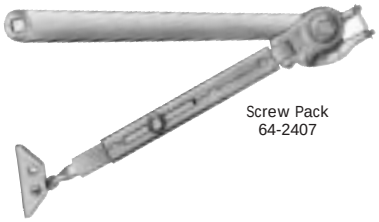

(Inverted)

- Forged Steel Arm 11-1/4" (286mm) long
- For reveals up to 2" (51mm)
- Handed adjustable friction type holder
- Permits 140° door opening
- 160° F fusible link standard
- Specify 125° F link only when required

Order as 25 R-F for right hand and 25 L-F for left hand x finish and link degree for complete arm assembly
25-FZ Includes: 63-2240 -Main arm and link assy. (L.H. -160°)
63-2241 -Main arm and link assembly (R.H. -160°)
63-2242 -Main arm and link assembly (L.H. -125°)
63-2243 -Main arm and link assembly (R.H. -120°)
63-2468 -Foot assembly

25-HZA Holder Arm (For Deep Reveal)

- Forged Steel Arm 11-1/4" (286mm) long
- For reveals up to 2-1/8" (130mm) to 8" (203mm)
- Non-handed adjustable friction holder
- Permits 140° door opening

Order as 25-HZA x finish for complete arm assy.
25-HZA Includes: 63-2231-Main arm and swivel assembly
61-2303-Foot assembly

25-FZA Fusible Link Holder Arm with 160°F or 125°F Fusible Link

(Inverted for Deep Reveal)

- Forged Steel Arm 11-1/4" (286mm) long
- For reveals 5-1/8" (54mm) to 8" (127mm)
- Handed adjustable friction holder
- Permits 140° door opening
- 160° F link standard
- Specify 125° F link only when required

Order as 25 R-FZA for right hand and 25 L-FZA for left hand x finish and link degree for complete arm assembly
25-FZA Includes: 63-2240 -Main arm and link assy. (L.H. -160°)
63-2241 -Main arm and link assembly (R.H. -160°)
63-2242 -Main arm and link assembly (L.H. -125°)
63-2243 -Main arm and link assembly (R.H. -125°)
63-2218 -Foot assembly

1430/1431 Series Powerglide® Door Closers Standard Application

SARGENT

1-800-727-5477

www.sargentlock.com

Closer is mounted on top rail on hinge side of door. As door opens, closer swings with door.

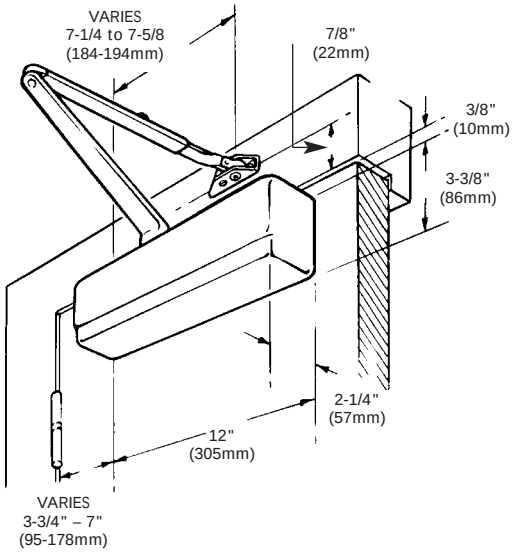

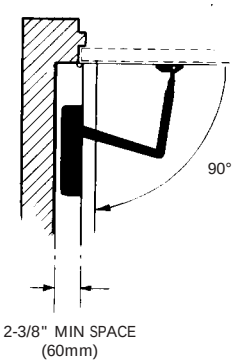

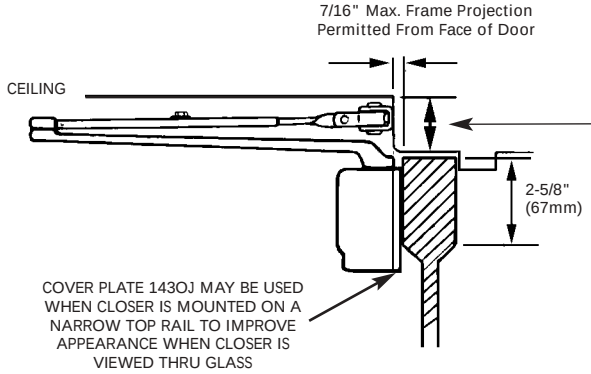

Clearance required for various arms	Arm Type
1-1/2"	O
1-7/8"	H
2-1/8"	F
1-1/4"	OLC

For General Use on

- Interior Doors — opening either in or out
- Exterior Doors — opening in

Covers

- High impact non-corrosive, flame retardent covers standard
- Standard cover projects 2-5/16" (59mm) from door face
- Optional metal covers use the same templating and projects 2-7/16" (62mm) from door face
- All covers secured by machine screws

Standard Mounting

- Maximum door opening (“O” & “RO” Arm) — 120°
- Holding range of holder arm (“H” Arm) — 90°-105°
- Holding range of fusible link arm (“F” Arm) — 75°- 110°

Alternate Mounting (Closer 2" Nearer Hinge)

- If hinges, frame and wall conditions permit, closer will allow door to open 180°
- Maximum door opening (“O” & “RO” Arm) — 120°
- Holding range of holder arm (“H” Arm) — 90°-105°
- Holding range of fusible link arm (“F” Arm) — 75°- 110°

Backcheck

- Backcheck is designed to start at approximately 70° door opening when standard mounting is used. **Not to be used as a positive stop**

Minimum Top Rail Required

- Normal application — 3-3/4"
- Narrow rail application — 2-5/8"

Thru Bolts and Mortise Nuts

- Available on request for 1-3/4" thick doors as standard. Suffix TB
- Available for 1-3/8" thick doors, specify

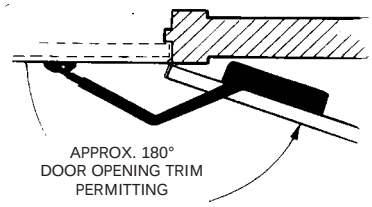

1430/1431 Series Powerglide® Door Closers Arms and Accessories Standard/Corner Bracket Application

SARGENT
1-800-727-5477
www.sargentlock.com

25-0 Regular Arm (without holder)

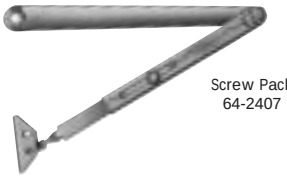

- Forged Steel Arm 11-1/4" (286mm) long
- Arm is not handed
- Permits 120° door opening with standard mounting
- Permits 180° door opening with alternate mounting or corner bracket

Order as 25-O x finish for complete arm assembly
25-O Includes: 63-2607 -Main arm and link assy.
63-2216 -Foot assembly

25-OLC Low Profile Arm (Without Holder)

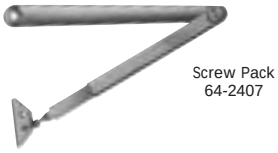

- Forged Steel Arm 11-1/4" (286mm) long
- Arm is not handed
- Arm requires less mounting space than the regular arm 25-0
- Must be used when the distance between the top of door to ceiling is less than 1-1/4" (32mm) minimum
- Permits 120° door opening with standard mounting

Order as 25-OLC x finish for complete arm assy.
25-OLC Includes: 63-2549 -Main arm and link assy.
63-2216 -Foot assembly

25-F 90° Fusible Link Holder Arm With 160°F or 125° F Fusible Link

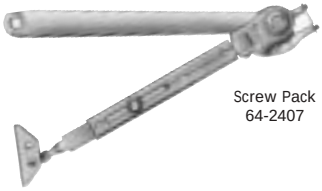

- Forged Steel Arm 11-1/4" (286mm) long
- Arm is handed and must be same as the closer
- Friction type holder easily adjusted by a wrench
- Permits 140° door opening
- Holds open from 80° to 140°
- 160° F Link Standard
- Specify 125°F Link only when required

Order as 25 R-F for right hand and 25 L-F for left hand x finish and link degree for complete arm assembly
25-F Includes: 63-2240 -L.H. Main arm and link assembly
63-2241 -R.H. Main arm and link assembly
63-2468 -Foot assembly

25-R0 Regular Arm (without holder)

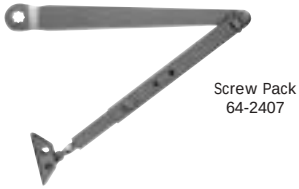

- Cold Formed Steel Arm 11-1/4" (286mm) long
- Arm is not handed
- Permits 120° door opening with standard mounting
- Permits 180° door opening with alternate mounting or corner bracket

Order as 25-RO x finish for complete arm assy.
25-RO Includes: 63-3396 -Main arm and link assembly
63-2216 -Foot assembly

25-H 90°-180° Holder Arm

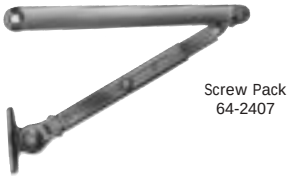

- Forged Steel Arm 11-1/4" (286mm) long
- Arm is not handed
- Hand is changed by inverting the foot assy
- Friction type holder is easily adjusted by a wrench
- Permits 180° door opening
- Holds open from 80 to 180°

Order as 25-H x finish for complete arm assembly
25-H Includes: 63-2229 -Main arm and link assy.
61-2303 -Foot assembly

25-F8 Fusible Link Mortise Foot Arm

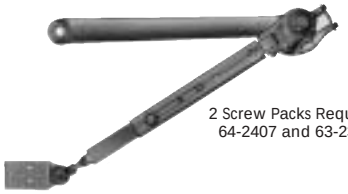

- Forged Steel arm 11-1/4" (286mm) long
- Arm is handed and must be same as the closer
- Friction type holder is easily adjusted by a wrench
- Permits 140° door opening
- Holds open to 140°
- 160°F Link Standard
- Specify 125°F link only when required

Order as 25 R-F8 for right hand and 25 L-F8 for left hand x finish and link degree for complete arm assembly
25-F8 Includes: 63-2240 -L.H. Main arm and swivel
63-2241 -R.H. Main arm and swivel
63-2273 -Foot assembly

25-08 Mortise Foot Arm

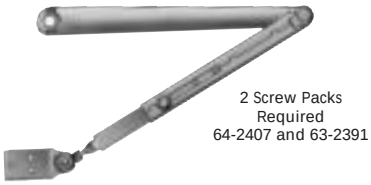

- Forged Steel Arm 11-1/4" (286mm) long
- Arm is not handed
- Arm is used for standard application
- Permits 120° door opening with standard mounting
- Commonly used with bull nose frame

Order as 25-08 x finish for complete arm assy.
25-08 Includes: 63-2607 -Main arm and link assembly
63-2273 -Foot assembly

25-H8 Mortise Foot Arm

- Forged Steel Arm 11-1/4" (286mm) long
- Arm is handed and must be same as the closer
- Friction type holder is easily adjusted by a wrench
- Permits 180° door opening
- Holds open from 80 to 180°

Order 25 R-H8 for right hand and 25 L-H8 for left hand x finish for complete arm assembly
25-H8 Includes: 63-2229 -Main arm and swivel assembly
63-2289 -L.H. foot assembly
63-2290 -R.H. foot assembly

1430-W Corner Bracket

- Bracket will accommodate most overhead door holders
- Fits right hand and left hand closers
- Fastens securely to both top and side jambs
- Malleable iron and painted to match finish of closer
- Order as 1430-W when ordering bracket separately
- Requires 1-1/4" (32mm) minimum wide stop
- Templating available for blade stop
- Bracket mounting screws provided

1430 J COVER PLATE

- Can be used to improve appearance when narrow door rail permits closer to be viewed through glass panel

1430/1431 Series Powerglide® Door Closers
Parallel Arm Application

SARGENT

1-800-727-5477

www.sargentlock.com

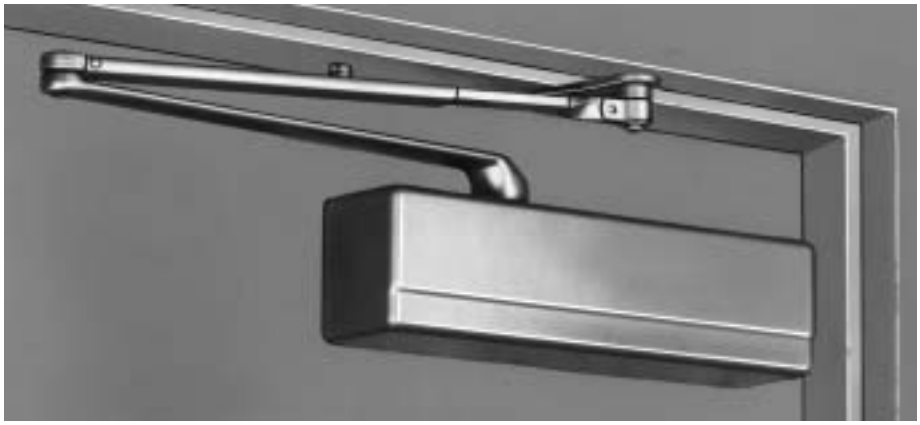

Closer is mounted on top rail on stop side of door. As door opens, closer swings with door.

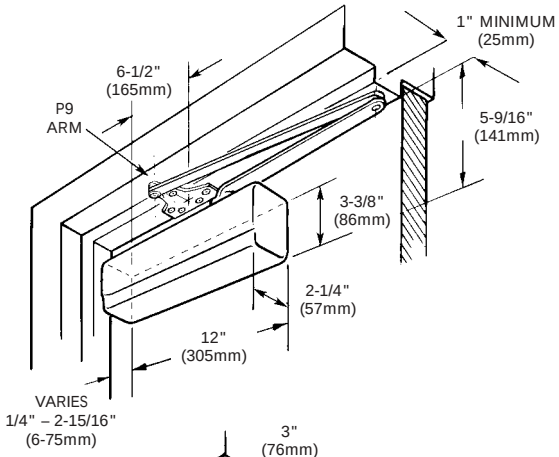

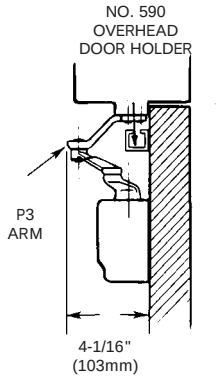

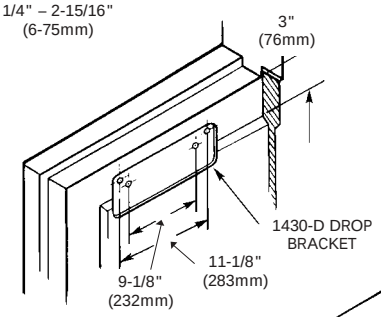

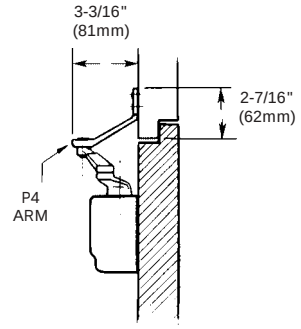

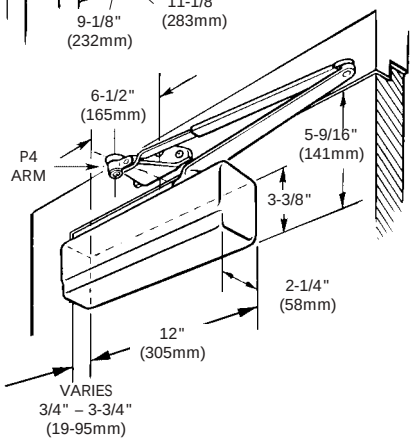

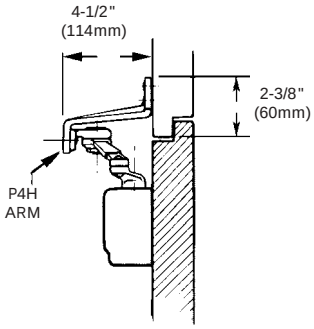

For General Use on

- Interior Doors – opening either in or out
- Exterior Doors – opening out

Covers

- High impact non-corrosive, flame retardent covers standard
- Standard cover projects 2-5/16" (59mm) from door face
- Optional metal covers use the same templating and projects 2-7/16" (62mm) from door face
- All covers secured by machine screws

Standard Mounting

- Maximum door opening (“P9” & “RP9” Arm) — 120°
- Holding range of holder arm (“PH9” Arm) — 75°-110°
- Holding range of fusible link arm (“PF9” Arm) — 75°- 110°

Alternate Mounting (Closer 2" Nearer Hinge)

- Maximum door opening (“P9” & “RP9” Arm) — 180°
- Holding range of holder arm (“PH9” Arm) — 110°-180°
- Holding range of fusible link arm (“PF9” Arm) — 110°-180°

Backcheck

- Backcheck is designed to start at approximately 70° door opening.

  Not to be used as a positive stop

Minimum Top Rail Required

- 5-9⁄16" is required to completely conceal the closer body
- 4-3/8" is required for mounting without a drop bracket
- 3" is required for mounting with a drop bracket
- Add 1/2" to requirements when using Fusible Link Arms
- Dimensions will vary when overhead door stops and holders are used
- Dimensions are measured from stop

Thru Bolts and Mortise Nuts

- Available on request for 1-3/4" thick doors as standard. Use Suffix TB
- Available for 1-3/8" thick doors, specify

Minimum Mounting Space Required Between Two Doors

With or Without Drop Bracket	
Regular Arm	4-9⁄16"
Holder Arm	5-5⁄16"

25-P9 Regular Arm

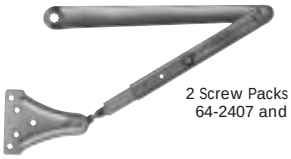

2 Screw Packs Required
64-2407 and 63-2391

- Forged Steel Arm 11-1/4" (286mm) long
- Arm is not handed
- Permits 120° opening with standard mounting
- Permits 180° opening with alternate mounting

Order as 25-P9 x finish for complete arm assembly
25-P9 Includes: 63-2607 -Main arm and link assembly
63-2271 -Foot assembly

25-RP9 Regular Arm

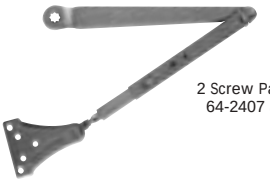

2 Screw Packs Required
64-2407 and 63-2391

- Cold Formed Steel Arm 11-1/4" (286mm) long
- Arm is not handed
- Permits 120° opening with standard mounting
- Permits 180° opening with alternate mounting

Order as 25-RP9 x finish for complete arm assembly
25-RP9 Includes: 63-3396 -Main arm and link assembly
63-2271 -Foot assembly

25-P3 Special Arm

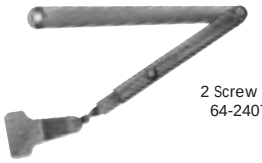

2 Screw Packs Required
64-2407 and 63-2391

- Forged Steel Arm 11-1/4" (286mm) long
- For use with auxiliary surface overhead stops and holders
- Foot bracket is offset allowing door closer to be lowered on door face
- Overhead stop and holder limits degree of opening
- Arm is not handed

Order as 25-P3 x finish for complete arm assembly
25-P3 Includes: 63-2607 -Main arm and link assembly
63-2270 -Foot assembly

25-P3A Special Arm

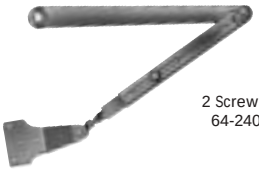

2 Screw Packs Required
64-2407 and 63-2391

- Forged Steel Arm 11-1/4" (286mm) long
- For use with auxiliary surface overhead stops and holders
- Foot bracket is offset an additional 3/4" allowing door closer to be lowered beyond that permitted by the 25-P3 arm
- Overhead stop and holder limits degree of opening
- Arm is not handed

Order as 25-P3A x finish for complete arm assembly
25-P3A Includes: 63-2607 -Main arm and link assembly
63-2274 -Foot assembly

25-P4 Transom Flush Arm

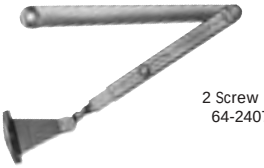

2 Screw Packs Required
64-2407 and 63-2391

- Forged Steel Arm 11-1/4" (286mm) long
- Foot bracket is attached to frame or transom face
- For use where stop or soffit is too narrow for the standard 25-P9
- Permits 120° opening with standard mounting
- Permits 180° opening with alternate mounting
- Arm is not handed

Order as 25-P4 x finish for complete arm assembly
25-P4 Includes: 63-2607 -Main arm and link assembly
63-2295 -Foot assembly

25-P4A Transom Flush Arm

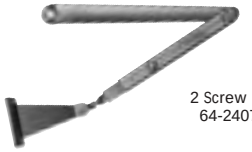

2 Screw Packs Required
64-2407 and 63-2391

- Forged Steel Arm 11-1/4" (286mm) long
- For use with auxiliary surface overhead stops and holders
- Foot bracket is attached to frame or transom face
- Foot bracket is offset an additional 3/4" compared with P4 allowing for clearance for use of overhead stop and holder
- Overhead stop and holder limits degree of opening
- Arm is not handed

Order as 25-P4A x finish for complete arm assembly
25-P4A Includes: 63-2607 -Main arm and link assembly
63-2272 -Foot assembly

25-PH4 Flush Transom Holder Arm

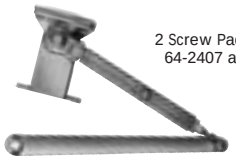

2 Screw Packs Required
64-2407 and 63-2391

- Forged Steel Arm 11-1/4" (286mm) long
- Equipped with an adjustable friction holder
- Holds open from 75° to 180°
- Easily adjusted by wrench
- Arm is not handed
- Use on frames where stop or soffit is too narrow to mount the standard hold open foot bracket

Order as 25-PH4 x finish for complete arm assembly
25-PH4 Includes: 63-2229 -Main arm and swivel assembly
63-2303 -Foot assembly
64-0050 -Foot bracket

25-PH9 Holder Arm

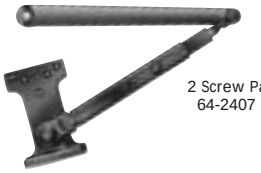

2 Screw Packs Required
64-2407 and 63-2391

- Forged Steel Arm 11-1/4" (286mm) long
- Equipped with an adjustable friction holder
- Holds open from 75° to 180°
- Easily adjusted by wrench
- Arm is not handed

Order as 25-PH9 x finish for complete arm assembly
25-PH9 Includes: 63-2229 -Main arm and swivel assembly
63-2303 -Foot assembly
64-0039 -Foot bracket

25-PF9 90°-180° Fusible Link Holder Arm with 160°F or 125°F Fusible Link

2 Screw Packs Required
64-2407 and 63-2391

- Forged Steel Arm 11-1/4" (286mm) long
- 160° fusible link standard, 125°F link optional
- Equipped with adjustable friction holder
- Holds open from 90° to 180°
- Arm is handed same as door closer

Order as 25 R-PF9 for right hand and 25 L-PF9 for left hand finish and link degree for complete arm assembly
25-PF9 Includes: 63-2229 -Main arm assembly
63-2245 -L.H. Foot bracket assembly
63-2246 -R.H. Foot bracket assembly

25-P10 Heavy Duty Arm

2 Screw Packs
Required
64-2407
63-2392

- Forged Steel Arm 11-1/4" (286mm) long
- Non-Handed
- Easily installed/adjusted
- Permits 120° opening at standard mounting
- Permits 180° opening at alternate mounting

Order as 25-P10 x finish for arm only
25-P10 Includes: 63-0641 -Arm and bearing assembly
63-3727 -Arm and bracket assembly

25-CPS Compression Stop Arm (Heavy Duty)

2 Screw Packs
Required
63-2407
63-2392

- Forged Steel Arm 11-1/4" (286mm) long
- Provides built in compression stop from 85° to 105°
- Permits 105° opening maximum
- Easily installed
- Handed arm is field reversible
- 125-VF bracket is used for flush frame conditions. Bracket is ordered separately
- 125-V bracket is used for narrow stop conditions. Bracket is ordered separately
- Dead stop within 3°

Order as 25-CPS x finish for arm only 25-CPS Includes:
63-0641 -Arm and bearing assembly
63-3830 -Arm and bracket assembly
63-0516 -Bumper holder
63-3493 -Bumper

25-PH10 Holder Arm (Heavy Duty)

2 Screw Packs
Required
64-2407
63-2392

- Forged steal arm 11-1/4" (286mm) long
- Equipped with adjustable friction holder
- Adjustable hold open from 75° to 180°
- Easily installed
- Arm is handed, same as door

Order as 25-P10 x finish for complete arm assembly
25-PH10 Includes:
63-0641 -Arm assembly
63-3839 -Arm and bracket assembly (L.H.)
63-3840 -Arm and bracket assembly (R.H.)

25-PS Stop Arm(Heavy Duty)

2 Screw Packs
Required
64-2407
63-2392

- Forged Steel Arm 11-1/4" (286mm) long
- Handed arm is field reversible
- Provides built in stop from 85° to 110°
- Permits 110° opening maximum
- Easily installed
- 125-VF bracket is used for flush frame conditions. Bracket is ordered separately
- 125-V bracket is used for narrow stop conditions. Bracket is ordered separately
- Permits 85° to 110° door opening

Order as 25-PS x finish for arm only 25-PS Includes:
63-0641 -Arm and bearing assembly
63-3837 -Arm and bracket assembly

25-CPSH Compression Holder Arm (Heavy Duty)

2 Screw Packs
Required
64-2407
63-2392

- Forged Steel Arm 11-1/4" (286mm) long
- Handed arm is field reversible
- Provides built in compression stop and holder mechanism from 85° to 105°
- Easily installed/adjusted
- Permits 105° opening maximum
- 125-VF bracket is used for flush frame conditions. Bracket is ordered separately
- 125-V bracket is used for narrow stop conditions. Bracket is ordered separately
- Dead stop within 3°

Order as 25-CPSH x finish for arm only 25-CPSH Includes:
63-0641 -Arm and bearing assembly
63-3836 -Arm and bracket assembly
63-0516 -Bumper holder
63-3493 -Bumper

25-OD Double Egress Arm

Screw pack
63-3685

- Forged sheet arm
- Handed
- For use with reveals from 3" to 4"
- Avilable with Holder option (HD) and bumper option (B)

Order as 25-OD x finish for track and arm assembly
25-OD Includes:
63-2447 -Track Assembly
63-3656 -LH Arm
63-3657 -RH Arm

25-PSH Holder Stop Arm (Heavy Duty)

2 Screw Packs
Required
64-2407
63-2392

- Provides holder and stop features
- Handed arm is field reversible
- Easily installed/adjusted
- For flush frame conditions, are mounts on 125-VF bracket. Bracket must be ordered separately
- For narrow frame conditions, arm mounts on 125-V bracket. Bracket must be ordered separately
- Permits 85° to 110° door opening

Order as 25-PSH x finish for arm only 25-PSH Includes:
63-0641 -Arm and bearing assembly
63-3833 -Arm and bracket assembly

1430 Arm Packs

2 Screw Packs Required
64-2407 and 63-2391

- 1430 Series Closers are available with UO, RUO and UH universal arm packs
- UO and RUO allows field conversion of a regular arm to a parallel arm assembly

Order closer as 1430-UO or 1430-RUO
UO Includes: 63-2607 -Arm and bearing assembly
63-2216 -Foot assembly
125-P9 -Parallel foot

RUO Includes: 63-3396 -Main arm
63-2216 -Foot assembly
125-P9 -Parallel foot

125-P9

2 Screw Packs Required
64-2407 and 63-2391

- UH allows field conversion of a regular hold open arm to a parallel hold-open arm assembly

Order closer as 1430-UH
UH Includes: 63-2229 -Main arm
61-2303 -Foot assembly
125-PH9 -Parallel foot

125-PH9

1430/1431 Series Powerglide® Door Closers
Parallel Arm Application
Arms and Accessories

SARGENT
1-800-727-5477
www.sargentlock.com

125-P3 Arm Conversion Unit

- For use with overhead door holders
- Converts standard arm to 25-P3 parallel arm

125-P3A Arm Conversion Unit

- For use with overhead door holders
- Same as 125-P3 except it provides a greater offset
- Converts standard arm to 25-P3A parallel arm

125-P4 Arm Conversion Unit

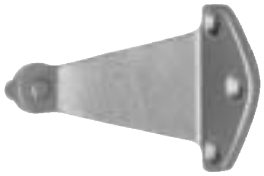

- For flush frame and door conditions
- Converts standard arm to 25-P4A arm

125-P4A Arm Conversion Unit

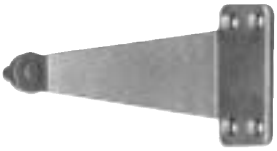

- For flush frame and door conditions
- Same as 125-P4 except it provides a greater offset
- Converts standard arm to 25-P4 arm

125-PH9 Parallel Arm Foot

- Converts standard hold open arm to 25-PH9 parallel hold open arm

1430-D Drop Bracket

- For use where top rail of door is too narrow to mount closer
- Wrought steel, primed and painted to match finish of closer
- Fits right hand and left hand closers
- Order as 1430-D when ordering separately

125-V/125-VF Brackets

125-V

125-VF

- For use with 25-PED and 25-PS/PSH arms
- Use 125-V for narrow stop and frame conditions
- Use 125-VF for flush door and frame conditions

581-2 Blade Stop Spacer Kit

- For frames with 1/2" blade stops
- For use with PS, PED and PSH CPS, CPSH arms
- Packed with 1-1/4" long screws and 125-V bracket and spacer shown above
- To order blade stop only use P/N 64-0157 + finish

581-1 Blade Stop Spacer Kit

- For frames with 1/2" blade stops
- For use with P9, PH9 and PF9 arms only
- Packed with 1-1/4" long screws and spacer shown above

585 Retro Fit Kits

Used for upgrading 1230/1231 closer (discontinued 1997) using existing templating, and using existing arms

585-1	Replaces 1230
585-2	Replaces 1231
585-3	Replaces 1230 DA
585-4	Replaces 1231 DA

Retro Fit Kit includes closer, full cover, and all fastners

1430* Series Powerglide® Door Closers Track Type Application

SARGENT
1-800-727-5477
www.sargentlock.com

Hinge Side Mtg. (Pull Side)

Stop Side Mtg. (Push Side)

The closer is mounted on the door. As the door opens, the closer swings with the door. For use on interior doors opening in or out. This application affords a variable hold-open feature which is available on order.

Two Mounting Applications are Available

- Pull Hinge Side Mounting "OT" (Track mounts on frame stop)

Minimum Top Rail Required

- 3-1/2" (89mm) is required to completely conceal the closer body
- 2-3/8" (60mm) is required when "J" cover plate is used

Maximum Door Opening

- 160° with standard track
- 120° with optional bumper track
- 180° with ideal conditions for standard track

Pull Side Double Egress

- 160° maximum door opening
- 120° opening with bumper option
- Range of hold open 85°-120°
- Used with reveals 3" to 4" (76mm-102mm)

Hold Open Range

- 85° to 120°

- Push Stop Side Mounting "POT" (Track mounts on frame face)

Minimum Top Rail Required

- 5-3/4" (146mm) is required to completely conceal the closer body
- 4-5/8" (117mm) is required when "J" cover plate is used
- 2-5/16" (59mm) is required when "D" drop plate is used

Maximum Door Opening

- 100° with standard track
- 95° with optional bumper track

Minimum Stop Required

- 1-9/16" (40mm) wide

Hold Open Range

- 85° to 95°

Arm & Track	Description
25-OT	Pull
25-OTB	Pull with Bumper
25-HT	Pull with Holder
25-HTB	Pull with Holder and Bumper
25-OD	Pull Double egress (Handed)
25-ODB	Pull Double egress with Bumper (Handed)
25-HD	Pull Double egress with Holder (Handed)
25-HDB	Pull Double egress with Holder and Bumper (Handed)
25-POT	Push
25-POTB	Push with Bumper
25-PHT	Push with Holder
25-PHTB	Push with Holder and Bumper

Covers

- High impact non-corrosive flame retardent covers standard
- Standard cover projects 2-1/4" (57mm) from door face
- Optional metal covers templating and projects 2-7/16" (62mm) from door face
- All covers secured by machine screws

Track

- Extruded aluminum track

Arm

- Forged steel

Bumper (Optional)

- Mounts in track to assist backcheck
- Not designed to be used as a stop
- Auxiliary stop is required
- Available for both regular or hold open tracks

Non-Handed Non Sized–Adjustable

- Interior doors to 5'0" wide at standard mounting
- Interior doors to 4'0" wide at alternate mounting
- Shipped factory preset for 3'0" door
- Factory pre-sized upon request

Backcheck

- Starts at approximately 70° door opening
- **Not to be used as a positive stop**
- An auxiliary door stop is required

Delayed Action (Optional)

- Adjustable up to at least one minute
- Fully open position to approximately 70°
- Available in addition to backcheck

Thru Bolts and Mortise Nuts

- Available on request, standard for 1-3/4" thick doors. Suffix TB
- Available for 1-3/8" thick doors, specify

***Track type application only available with 1430 door closers**

1430 /1431 Series Powerglide® Door Closers How To Order

SARGENT
1-800-727-5477
www.sargentlock.com

Special Conditions

The SARGENT Template Book contains templates for all standard applications of SARGENT Door Closers with SARGENT overhead door holders. To insure a satisfactory installation for other holders, it is recommended that complete details be submitted as follows:

- Type, size and make of holder
- Holding position (maximum door opening)
- Submit holder template being used
- Closer application being used
- Size and type of butt or hinge

In the case of unusual door, frame and butt conditions where regular goods will not meet requirements, submit drawings and complete details specifying the degree of door openings required. It is recommended that ordering information include the size of the butts (when 6" or over) so special mounting templates can be furnished to ensure a full 180° opening.

Thru Bolts and Mortise Nuts

When thru bolting is ordered, factory will furnish mortise nuts only, for use with the machine screws furnished with the closer. Nuts are sized to accommodate 1-3/8" or 1-3/4" thick doors. Specify when ordering. If not specified, nuts for a 1-3/4" thick door will be furnished. For 2-1/4" thick doors, thru bolts will be furnished with mortise nuts. Thru bolting is not recommended for 2-1/4" thick hollow metal doors unless a bridge type reinforcement is provided to prevent collapse of top rail when nuts are tightened.

Packing

All closer assemblies are packaged 4 per carton. All conversion units are packaged 10 per carton.

Series	Number per Carton	Approx. Weight per Carton
1430-O	4	31-3/4 lbs.
1430-H	4	35-3/4 lbs.

How To Order Complete Door Closer

		Example
Series 1430	1430	1430
Delayed Action	When delayed action is required suffix DA	EB 1430-F(RH) DA
Arm with Closer	See applicable catalog section for arms available	EB 1430- F(RH)
Standard Finish, Powder Coated on all exposed	EB — Bronze Enamel to match 10B ED — Bronze Enamel to match 20D EN — Aluminum Enamel EP — Bronze Enamel to match 10 **Optional Plated Finishes** (Handed Metal Cover required)	EB
	Symbol BHMA Description	
	3 605 Polished Brass	
	4 606 Dull Brass	
	9 637 Bright Bronze, Clear Coated	
	10 612 Dull Bronze	
	10B 613 Oxidized Dull Bronze, Oil Rubbed	
	26 625 Chrome	
	26D 626 Dull Chrome	
Size Factory Set at 3	Non sized closers are adjustable-Factory pre-sized upon request	EB 1430 (specify size)
Thru Bolts and Mortise Nuts	When ordering mortise nuts use suffix TB. 1-3/4"(45mm) std door thickness, 1-3/8" available	EB 1430-F(RH) DA TB
Corrosion Protection	Special rust inhibitor process (arm only) suffix SRI for added protection in corrosive environments	EB 1430 F(RH) DA TB SRI

How To Order Accessories

		Example
When complete closer assembly is ordered with an accessory, order accessory as a separate item		
Arm Only	Specify arm required and finish	25-PSH x EN
Arm Conversion Units	Specify finish and unit	125-P4 x EB
Accessories	Specify accessory finish – See applicable catalog section	1430-D x EB

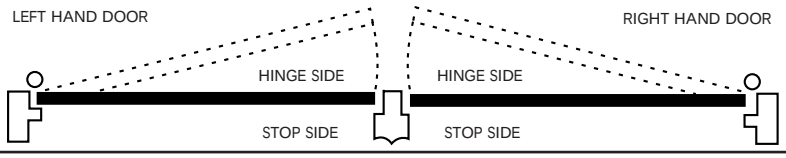

1430/1431 Series Powerglide® Door Closers Suggested Architect's Specifications

SARGENT
1-800-727-5477
www.sargentlock.com

Features Common to 1430 Powerglide® Door Closers

1. All closers for both interior and exterior doors shall be the product of one manufacturer and be matched in design.
2. All surface closers shall be adjustable to provide sizes 3 through 6 or 1 through 4 to comply with ADA.
3. Closed full rack and pinion construction.
4. Closing speed, latching speed and backcheck shall be controlled by 1/8" Allen head key operated valves.
5. Delayed action feature shall be available and controlled by a separate valve. Delayed action shall be standard and in addition to, not in lieu of, backcheck.
6. Backcheck and delayed action features shall be provided with a standard pressure relief valve to protect the door opening from excessive force.
7. The one piece closer body shall be manufactured of high-performance cast aluminum silicon alloy.
8. An increase of 15% in closing power shall be provided by means of adjustment of the arm leverage at the foot connection. (Standard Arm)
9. All arms shall be finely finished, heavy duty forged steel. (Optional "RO" & RP9 arms are cold formed steel).
10. Two mounting positions of the closer shall meet all requirements. Standard mountings shall provide 120° door opening and alternate mounting 180° door mounting.
11. All closers shall be suitable for standard, corner bracket, top jamb, parallel arm and track type applications when provided with proper brackets and arms.
12. Closer covers shall be of high impact resistant and flame retardant material and secured by machine screws.
13. Projection of closer body from door shall not exceed 2-1/4" (57mm) with standard cover.
14. Closers shall be non-handed.
15. The spindle shaft shall be sealed hydraulically with an "O" ring.
16. The 1431 shall be adjustable for opening forces to comply with ANSI A117.1 and ADA.
17. Specify desired options such as: Metal Cover and Architectural Plated Finishes.
18. All closers bodies shall have a 10 year limited warranty.
19. Closers should comply with UL-10C and UBC 7-2 (1997). Positive Pressure Fire Test.
20. Closers to be Grade 1 of ANSI/BHMA A156.4.

ESSEX™
THE TOTAL OPENINGS PEOPLE

SARGENT Manufacturing Company • 100 Sargent Drive • P.O. Box 9725 • New Haven • CT 06536-0915
Phone: 800-727-5477 • Fax: 888-863-5054 • Web site: www.sargentlock.com
SARGENT of Canada • Phone: 905-940-2040 • Fax: 905-940-3242 • Web site: www.sargentcanada.ca

Founded in 1864, SARGENT® is a market leader in locksets, cylinders, door closers, exit devices, electro-mechanical products and access control systems for new construction, renovation and replacement applications. The company's customer base includes commercial construction, institutional and industrial markets.

The ASSA ABLOY Group is the world's leading manufacturer and supplier of locking solutions, dedicated to satisfying end-user needs for security, safety and convenience.