SARGENT®

6 Line Cylindrical Knob Locks

An ASSA ABLOY Group company

ASSA ABLOY

6 Line Knob Lock

SARGENT
1-800-727-5477
www.sargentlock.com

Table of Contents

Features & Benefits 1
Knob/Lever & Rose Designs 2
Functions 3-4
Latches 5
Retrofit Options 6
Prefixes & Strikes 7
How to Order, Finishes, Packaging, Architectural Specifications 8

Specifications

For Doors	1-3/8" (35mm) thick door adjustable to 1-3/4" (44mm)
Backsets	2-3/8" (60mm) standard 2-3/4" (70mm) backset available (24- prefix) 3-3/4" (95mm) backset available (23- prefix) 5" (127mm) backset available (25- prefix) Other backsets available
Cylindrical Housing	Steel, zinc dichromate finish
Front	Wrought brass or bronze 2-1/4" (57mm) x 1" (25mm) standard – other options available
Strike	Wrought brass, bronze or stainless steel 600 curved lip strike standard 808 curved lip ANSI strike (28- prefix) 505 Radius/full lip strike (13- prefix) Wrought box strike available (WBS suffix)
Hand	Non-cylinder locks – non-handed Cylinder type locks – reversible in field Removeable core locks – handing must be specified
Knobs	Heavy wrought brass or bronze
Lever	Cast zinc
Roses	Heavy wrought brass or bronze
Latch	Brass x 1/2" (13mm) throw
Cylinder	Brass, 6 pin, LA keyway standard
Keys	Two, nickel silver
Masterkeying	Can be master keyed or grand master keyed Construction key systems available
Finishes	3, 4, 10, 10B, 26, 26D
Door Prep	ANSI 115.2 (160 and 161)
Minimum Stile	4" (102mm) with B and O roses 4-1/2" (114mm) with E and L roses

Certification Compliance

ANSI	Meets ANSI A156.2 Series 4000 - Grade 2
UL	UL listed to U.S.A. and Canadian safety standards Listed for 3 Hour Doors (double doors require 41 - prefix)
Positive Pressure	Meets UL 10C and UBC 7-2 (1997)
ADA	Lever only conforms to ADA requirement for barrier-free accessibility

SARGuard™ Patent Pending SARGuard Coating

- New finish coating available on all SARGENT product lines, utilizes a silver-based antimicrobial compound from AgION Technologies
- As an integral part of the finish coating, SARGuard lasts for the life of the hardware
- SARGuard coating permanently suppresses the growth of bacteria, algae, fungus, mold and mildew. It is effective against a broad spectrum of bacteria.
- Non-toxic and completely safe. The AgION antimicrobial compound is EPA and NSF approved and FDA listed for use in medical and food preparation equipment.
- Applications: Anywhere there is need for a clean environment (hospitals, laboratories, schools, medical centers, daycare, food processing etc.)

AgION

The AgION antimicrobial is not intended as a substitute for good hygiene. Coated products must still be cleaned to insure the surfaces will be free of destructive microbes. SARGENT makes no representations or warranties, express or implied, as to the efficacy of the AgION antimicrobial. A copy of the AgION warranty is available upon request.

On the Cover

6G05 x BS

6 Line Knob Lock
Features & Benefits

SARGENT
1-800-727-5477
www.sargentlock.com

Features & Benefits

6G05 x BS Shown

The 6 Line is a highly styled standard duty lock line incorporating a broad spectrum of functions, designs and finishes built to conform to ANSI/BHMA 156.2 Series 4000 Grade 2. It is ideally suited for fine homes, apartments, hotels and commercial buildings.

SARGENT® ***Raising the Bar of Excellence!***

Versatility

- Lockbody fits doors from 1-3/8" (35mm) to 1-3/4" (44mm) thick
- Latches are available in 4 standard backsets
- Non-handed or field reversible (except Removable Core)
- Fits ANSI 115.2 (160 and 161) door prep
- Multiple latches and strike options available including radius/round applications
- Wide variety of functions and prefixes
- SL lever design meets national ADA handicapped requirements

Quality

- Complements and blends with trim designs of other SARGENT locks for unified appearance
- Exceeds ANSI A156.2 Series 4000 – Grade 2
- Accepts SARGENT standard, high security and removable core cylinders
- Quality finishes with split finishes optional
- Fire Code compliance with all functions depending on application
- SARGuard™ permanent silver-base antimicrobial coating. Patent Pending

Convenience

- Installs with just two lockbody screws for easy installation and maintenance
- Mix rose and knob designs for a custom look – 2 knob/1 lever and 4 rose designs

Applications

- Standard Duty Commercial buildings
- Offices
- Apartment buildings
- Hotel/Motel
- Residential housing
- Retail
- Churches
- Warehouses

Innovation

- SARGENT's revolutionary SARGuard™ available. This antimicrobial silver-based finish coating permanently supresses the growth of bacteria, algae, fungus, mold and mildew. EPA and NSF approved and FDA listed

6 Line Knob Lock
Knob/Lever & Rose Designs

SARGENT
1-800-727-5477
www.sargentlock.com

OB Design

- Rose: O - Wrought
- Knob: B - Wrought

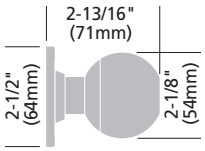

BS Design

- Rose: B - Wrought
- Knob: S - Wrought

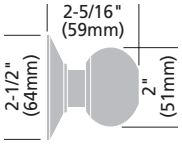

ES Design

- Rose: E - Wrought
- Knob: S - Wrought

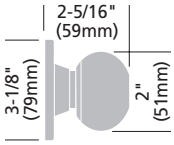

LB Design

- Rose: L - Wrought
- Knob: B - Wrought

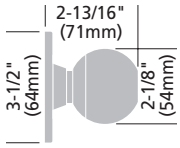

OSL Design

- Rose: O - Wrought
- Lever: SL - Cast

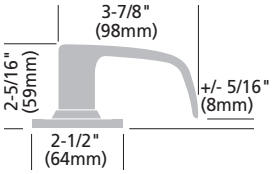

- Lever not available with all functions – see functions section
- Available with split knob/lever design; specify outside trim design first on order

Design combinations are not limited to those shown. Any rose and knob or lever on this page can be combined to suit individual taste.

Knob/Lever projections shown are for 1-3/4" (44mm) thick doors and will vary by door thickness.

Removable core cylinder is available with "S" knob design only.

6 Line Knob Lock Functions

SARGENT
1-800-727-5477
www.sargentlock.com

Single Cylinder Functions

04 Storeroom or Closet

6G04

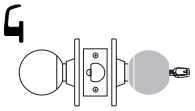

- Deadlocking latch
- Latch retracted by knob inside or key outside
- Outside knob rigid at all times
- **ANSI F86**

05 Entrance or Office

6G05

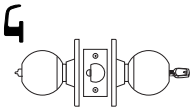

- Deadlocking latch
- Latch retracted by either knob unless outside knob is locked by turn button in inside knob
- Turn button must be released manually
- Key retracts latch when outside knob is locked
- **ANSI F81**

24 Entry or Office

6G24

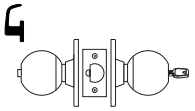

- Deadlocking latch
- Latch retracted by either knob unless outside knob is locked by push button in inside knob
- Push button released by key or turning inside knob
- Closing door does not release outside knob or button
- Key in outside knob retracts latch and releases inside button
- **ANSI F82**

37 Classroom

6G37

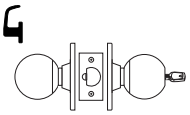

- Deadlocking latch
- Latch retracted by either knob unless outside knob is locked by key
- Key in outside knob locks or unlocks outside knob
- **ANSI F84**

38-2 Twin Communicating

6G38-2

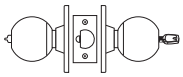

- Deadlocking latch
- Latch retracted by inside knob or T-turn
- Key in inside knob locks or unlocks both inside knob and outside T-turn
- For 1-3/8" (35mm) or 1-3/4" (44mm) thick doors only. Must specify when ordering
- Minimum clearance of 1-1/2" (38mm) required between doors

50 Hotel, Dormitory or Apartment

6G50

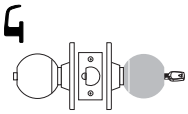

- Deadlocking latch
- Latch retracted by key outside and knob inside
- Outside knob always rigid
- Depressing push button when door is closed shuts out all keys except emergency key and projects visual occupancy indicator in cylinder face
- Push button released by turning inside knob which automatically reactivates all keys and retracts visual occupancy indicator
- Lockout key fixes push button in locked position, shutting out all keys except emergency and is not released by turning inside knob
- Lockout key provided
- See prefix page for restrictions to 50 function
- **ANSI F93**

NOTE: Shaded knob indicates it is rigid at all times.

SL Lever available only on inside or outside trim as indicated.

6 Line Knob Lock Functions

SARGENT
1-800-727-5477
www.sargentlock.com

Non-Cylinder Functions

15 Passage

6U15

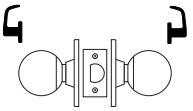

- Latch retracted by either knob
- **ANSI F75**

15-3 Exit or Twin Communicating

6G15-3

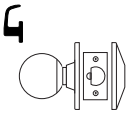

- Deadlocking latch
- Latch retracted by knob inside
- Blank rose outside
- For 1-3/8" (35mm) or 1-3/4" (44mm) thick doors only
- Minimum clearance of 1" (25mm) required between doors

65 Privacy/Bathroom

6U65

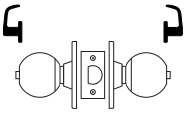

- Latch retracted by either knob unless outside knob is locked by push button in inside knob
- Turning inside knob or closing door releases button
- Emergency key or flat blade screwdriver in the emergency button releases the inside button and unlocks the outside knob
- Emergency key supplied only when ordered separately (14-0300)
- **ANSI F76**

75-2 Twin Communicating

6G75-2

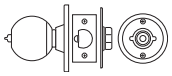

- Deadlocking latch
- Latch retracted by inside knob or T-turn outside
- Turning button in inside knob locks both inside knob and outside T-turn
- For 1-3/8" (35mm) or 1-3/4" (44mm) thick doors only. Must specify when ordering
- Minimum clearance of 1-1/2" (38mm) required between doors

93 Single Knob/Lever Pull

6U93

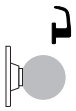

- For wood or custom hollow metal doors
- Knob and rose attached by surface applied screws (hidden)
- Requires special door preparation – see template

94 Double Knob/Lever Pull

6U94

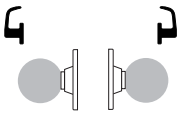

- For wood or custom hollow metal doors
- Knob and rose attached both sides by surface applied screws each side (hidden)
- Requires special door preparation – see template

NOTE: Shaded knob indicates it is rigid at all times.

SL Lever available only on inside or outside trim as indicated.

Door Prep

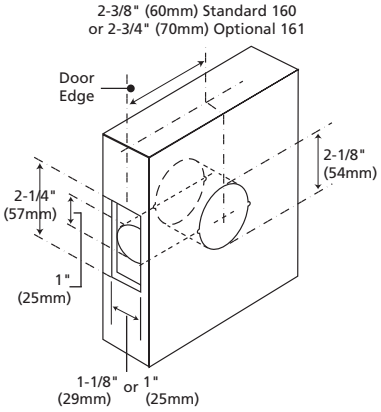

160 & 161 cutouts x 600 Strike (Standard)

If weather stripping, acoustical materials or silencers are used on the door or frame, care must be taken in the installation so that it will not interfere with the ease in which the latch enters the strike.

14-0299 Lockout Key

- Provided with 50 function

14-0300 Emergency Key

- Provided with 65 function
- Emergency key provided only when ordered separately

6 Line Knob Lock Latches

SARGENT
1-800-727-5477
www.sargentlock.com

Latch Assemblies

PART	TYPE	PREFIX/BACKSET	FRONT
06-5083	Deadlocking Latch	Standard 2-3/8" (60mm)	2-1/4" x 1" (57mm x 25mm)
06-5225	Latch	"	"
06-5085	Deadlocking Latch	13- Prefix 2-3/8" (60mm)	1/4" Radius Corner (6mm)
06-5227	Latch	"	"
*06-5100	Deadlocking Latch	15- Prefix 2-3/8" (60mm)	Drive in type (26D finish only)
06-5102	Deadlocking Latch	17- Prefix 2-3/4" (70mm)	2-1/4" x 1" (57mm x 25mm)
06-5234	Latch	"	"
06-5096	Deadlocking Latch	23- Prefix 3-3/4" (95mm)	2-1/4" x 1-1/8" (57mm x 29mm)
06-5232	Latch	"	"
06-5094	Deadlocking Latch	24- Prefix 2-3/4" (70mm)	2-1/4" x 1-1/8" (57mm x 29mm)
06-5231	Latch	"	"
06-5098	Deadlocking Latch	25- Prefix 5" (127mm)	2-1/4" x 1-1/8" (57mm x 29mm)
06-5233	Latch	"	"
06-5055	—	5" (127mm) extension only. Use with standard latch	

* Not UL listed

Latches

- To order latch separately, specify: part number x finish (see table above)
- Front size: 2-1/4" (57mm) x 1" (25mm)
- Finishes: 3, 4, 10, 10B, 32D

2-3/4" (70mm) Backset Latch – (17-Prefix)

- To order latch with lock, specify 17- prefix
  Example: 17-6G05 x OB x 32D

2-3/8" (60mm) Backset Latch – Standard

- Shipped standard with keyed locks, deadlocking
- 15 and 65 functions are not deadlocking

Extended Backset Latch – (23 or 25 Prefix)

- 23- Prefix – 3-3/4" (95mm) backset
  25- Prefix – 5" (172mm) backset

Radius Latch 1/4" (6mm) – (13-Prefix)

- To order latch with lock, specify 13- prefix
  Example: 13-6G05 x OB x 32D

2-3/4" (70mm) Backset Latch – (24-Prefix)

- Front Size: 2 1/4" (57mm) x 1 1/8" (29mm)
- To order latch with lock, specify 24-prefix
  Example: 24-6G05 x OB x 32D

Drive-in Latch – (15-Prefix)

- Deadlocking
- 1" (25mm) diameter
- Finishes: 26D only
- To order latch with lock specify 15-prefix
  Example: 15-6G05 x OB x 32D

530 Kit: Rabbeted Front and Strike

- Order as 530 x finish
- Filler plate 2-1/4" (57mm) x 1-1/8" (29mm)
- For 1" (25mm) fronts only

6 Line Knob Lock Retrofit Options

SARGENT
1-800-727-5477
www.sargentlock.com

SARGENT 6010 Replacement Kit – for 7600 Integra Locks

Sub Front

800 Strike

808 Strike

- For installation of standard backset 8/9 line lock replacing old 7600 Integra locks in wood doors
- Finishes: 3, 4, 10, 10B, 10BL, 15, 20D, 26 and 26D
- Replacement Kit consists of:

Quantity	Item	Item Number	Size
1	Sub Front	08-0562 x finish	4-1/4" (108mm) x 1-1/4" (32mm)
1	Strike **(must specify 800 or 808)**	800 x finish (with screws) 808 x finish (with screws)	2-3/4" (70mm) x 1-1/4" (32mm) x 1-1/4" (31mm) 4-7/8" (121mm) x 1-1/8" (29mm) x 1-1/4" (31mm)
1	Strike Box	08-0055 77-1141	For 800 Strike For 808 Strike (ANSI)
2	Sub Front Screws	01-5001	#10-24 x 3/4" (19mm)

NOTE: Strikes will <u>not</u> retrofit for strikes 4-1/4" (108mm) x 1-1/8" (29mm) x 1-1/4" (32mm)
Lock will not retrofit for lock front plate size 5-1/4" (133mm) x 1-1/4" (32mm) – 36-7600 locks

Large Roses and Cover Plates

"L" Rose
3-1/2" (89mm) diameter
Order: 06-5002 x finish

Cover Plate
3" (76mm) x 12" (305mm)
Order: 06-0037 x finish
(2 qty. required)

Screws
Order: 01-2037 x finish
(8 qty. required)

- To cover existing holes on face of door
- "L" roses can be ordered with the 6 Line lock
  Example: 6G05 LB 26D
- Cover plate, if required, must be ordered separately

6 Line Knob Lock Prefixes & Strikes

SARGENT
1-800-727-5477
www.sargentlock.com

Prefix Designation and Description

10▲	SARGENT Signature Key System
11▲	SARGENT XC Key System (Not available with 10-, 21-, 22-, 60-, 63- or 64- prefixes)
13	1/4" radius front 2-1/4" x 1" & strike x 2-3/8" backset only
14	1/4" Radius full lip strike #505
15	Drive-in deadlocking latch x 2-3/8" backset and 26D only
17	2-3/4" backset x 2-1/4" x 1" front
21▲	SARGENT Construction Key System (lost ball). Standard on new systems (est. since 5/1/96)
22▲	SARGENT Construction Key System (split key) For pre-established key systems only
23	3-3/4" backset
24	2-3/4" backset
25	5" backset
28	Strike 808 – 1-1/4" lip standard. Lip lengths 1-1/8" to 2-7/8" in 1/4" increments only
36	6 Lobe security head screws
37	Spanner head screws
60▲*	SARGENT Removable Core Cylinder, plastic disposable core provided (“S” knob only)
63▲*	SARGENT Removable Core Cylinder (“S” knob only). Includes masterkeying and grand master keying changes
64▲*	SARGENT Removable Construction Core Cylinders (“S” knob only)
SG	SARGuard – An antimicrobial clear powder coat
VA▲	SARGENT V-10 Standard Cylinder
VS▲	SARGENT V-10 Standard Sub-assembled Cylinder

▲ Prefixes not available for 50 function
* Must specify hand of door

2-1/4" Full Lip Strike – (13- Prefix)

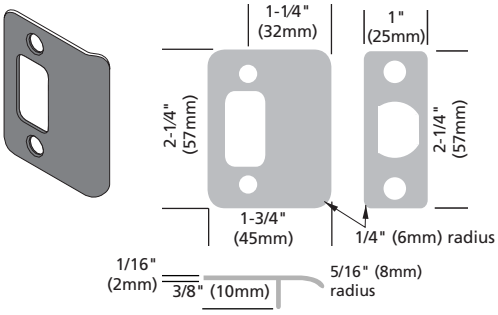

- To order strike separately, specify: 505 x finish
- Adjustable tab to reduce door movement when latch engaged in strike standard
- Latch finishes: 3, 4, 10, 10B, 32D

2-1/4" Full Lip Strike – (14- Prefix)

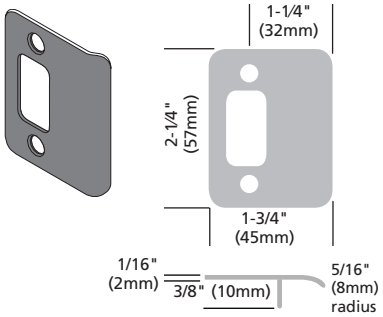

- To order strike separately, specify: 505 x finish
- Adjustable tab to reduce door movement when latch engaged in strike standard

Strikes

- Strike finishes: 3, 4, 10, 10B, 32, 32D
- Lock with 26 finish is supplied with 32 strike; 26D lock is supplied with 32D strike

2-3/4" Curved Lip Strike – Standard

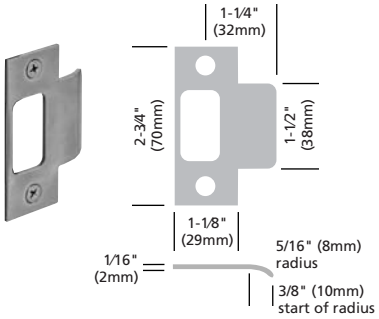

- Furnished standard with 1-1/4" (32mm) curved lip from center of strike screw holes to end of lip
- Lip lengths 7/8" (22mm), 1" (25mm), 1-1/4" (32mm) standard, 1-1/2" (38mm), 1-3/4" (44mm) and 2" (51mm)
- To order strike separately, specify 600 strike x finish x lip length

4-7/8" Curved Lip Strike: (28-Prefix)

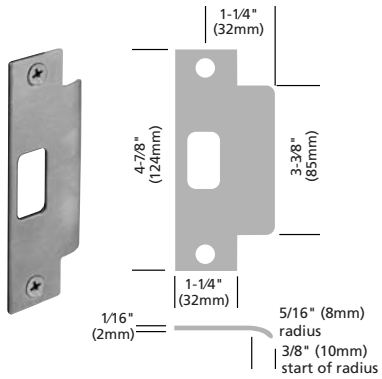

- Conforms to ANSI standard
- Furnished standard with curved lip 1-1/4" (32mm) from center of strike screw holes to end of lip
- Lip lengths 7/8" (22mm), 1-1/8" (29mm), 1-1/4" (32mm), 1-3/8" (35mm), 1-5/8" (42mm), 1-7/8" (48mm), 2-1/8" (54mm), 2-3/8" (60mm), 2-5/8" (66mm), 2-7/8" (73mm)
- To order strike separately, specify 808 strike x finish x lip length
- Wrought box not provided, order separately as 77-1141.

6 Line Knob Lock
How to Order, Finishes, Packaging & Architectural Specfications

SARGENT
1-800-727-5477
www.sargentlock.com

How to Order

Specify	Note	Example
Quantity	Number Ordered	**1 Qty**
*Prefix	Additional Feature	1 Qty **28-**
Lock Function	See Functions	1 Qty 28-**6G05**
Trim Design	Rose x Knob/Lever	1 Qty 28-6G05 **OB**
Finish	See Finishes	1 Qty 28-6G05 OB **26D**
Additional Information	Item/Heading Number, Door Number, Keyset Information	1 Qty 28-6G05 OB 26D x **Item 01 x DRL201 x Keyset AA3**
Hand	Required for 60, 63 and 64 Prefixes. Specify hand of door	

* Can choose multiple prefixes

Finishes

US Finish	Description	ANSI/BHMA
3	Polished brass, clear coated	605
4	Satin brass, clear coated	606
10	Satin bronze, clear coated	612
10B	Oxidized bronze, oil rubbed	613
26	Polished chrome	625
26D	Satin chrome	626
SG	SARGuard™ available on all finishes except 10B (613)	
Zinc levers are plated to match BHMA finish Split finishes available. Specify outside finish first		

Packaging

6G05 x OB
Approximately 2 lbs. 10 oz./box (1.2 kg)
10 boxes/case

6 Lobe & Spanner Bit Packs

Part Number	Description
82-3855	6 Lobe Bit Pack 7 Bits (Sizes: T8, T9, T10, T15, T20, T25, T27) Requires 9/32" (7mm) Driver
82-3856	Spanner Bit Pack 5 Bits (Sizes: 6, 8, 10, 12, 14) Requires 1/4" (6mm) Driver

Suggested Architectural Specifications

2.1 Standard Duty Bored-in Lock

A. All bored knob locks shall be manufactured by SARGENT Manufacturing Company, New Haven, CT.

B. Locks shall meet or exceed requirements of ANSI A156.2 Series 4000, Grade 2.

C. Locks shall be completely reversible, except the Removable Core Cylinders.

D. Locks shall be able to fit a standard 2-1/8" (55 mm) bore (161 prep) without the use of through-bolts.

E. Locks shall comply with UL10C and UBC 7-2 positive pressure requirements.

F. Latch shall be minimum 1/2" (13mm) throw, UL Listed.

G. Locks shall have 2-3/8" (70 mm) backset, standard.

H. Locks shall have brass 6-pin cylinder, standard.

I. Locks shall have a one year limited warranty.

ESSEX™
THE TOTAL OPENINGS PEOPLE

SARGENT Manufacturing Company • 100 Sargent Drive • P.O. Box 9725 • New Haven • CT 06536-0915
Phone: 800-727-5477 • Fax: 888-863-5054 • Web site: www.sargentlock.com
SARGENT of Canada • Phone: 905-940-2040 • Fax: 905-940-3242 • Web site: www.sargentcanada.ca

Founded in 1864, SARGENT® is a market leader in locks, cylinders, door closers, exit devices, electro-mechanical products and access control systems for new construction, renovation and replacement applications. The company's customer base includes commercial construction, institutional and industrial markets.

The ASSA ABLOY Group is the world's leading manufacturer and supplier of locking solutions, dedicated to satisfying end-user needs for security, safety and convenience.

An ASSA ABLOY Group company

ASSA ABLOY