SARGENT®

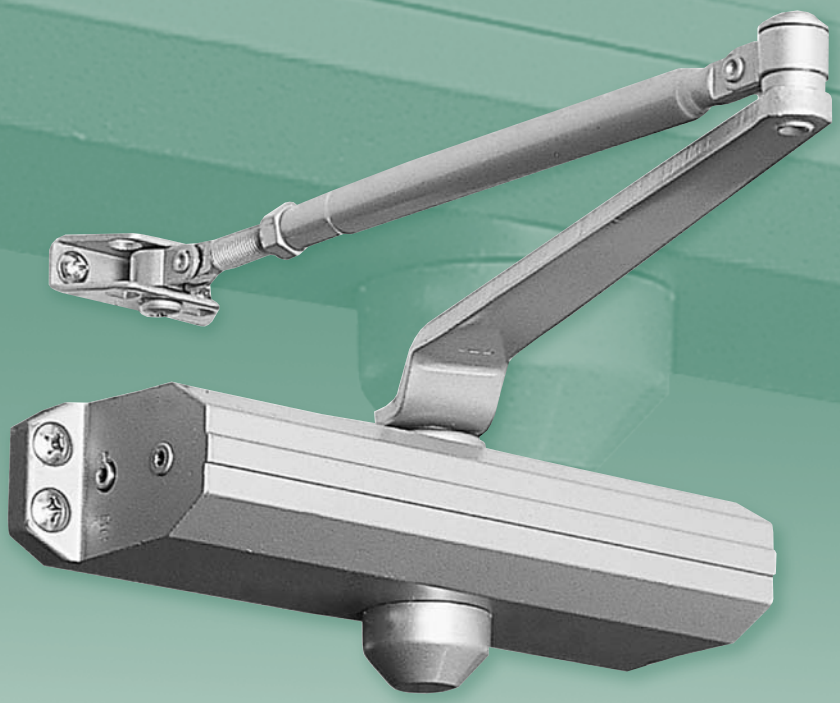

1130 Series Door Closers

An ASSA ABLOY Group company

ASSA ABLOY

1130 Series Door Closers

SARGENT
1-800-727-5477
www.sargentlock.com

Table of Contents

General Information 1
Applications 2
Applications & Accessories 3
Architectural Specifications . . . . . Back Cover

On The Cover

- 1131 RU installed "Standard application"

11/25/04

1130 Series Door Closers
General Information

SARGENT
1-800-727-5477
www.sargentlock.com

Features

- Reversible "Non Handed"
- Full rack and pinion
- High strength cast aluminum case
- Tri packed for versatile mounting, inverted or parallel
- Arm leverage adjustment
- Heat treated high tensile springs
- One piece spindle heat treated for high strength
- Models available with spring adjustment along with sized models
- Separate key controlled regulating valves for door closing and latching speed
- Three choices of finishes: EN for Aluminum Enamel, EB for Bronze Enamel to match 10B, EAB for Brass Enamel
- Valves are captivated to prohibit vandalism
- Adjustable backcheck valve is standard
- UL and ULC listed
- Typical uses hotel/motel guest rooms, assisted living centers, public housing, store fronts, office buildings
- ANSI Grade 1 A156.4
- 10 year year warranty
- Parallel Arm Conversion bracket included
- Mortise nuts and thru bolts included
- Auxilary door stop required
- Optional full cover available
- Wood and machine screws provided as standard

Non Hold Open "RU" Package

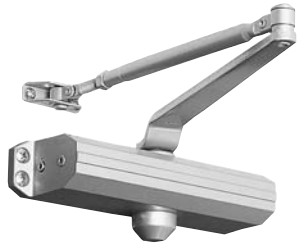

The RU package is provided with non hold open arm which includes additional bracket that allows installer the choice of standard, parallel or top jamb application. Used on Rated and Non Fire rated doors.

Standard application shown above.

Holder Arm "HU" Package

All applications for 1130 series closers shown in this catalog are also available with holder arms. Holding ranges are listed under the individual application. Specify "HU" arm when ordering.

The HU includes an extra bracket for field conversion from standard application to parallel arm application.

Series By Application

Description	Models
Adjustable from sizes 3 through 6: Average weight interior doors through exterior doors subject to heavy draft	1130
Adjustable from sizes 1 through 4: Door closers to meet handicapped requirements or for light through medium weight interior doors	1131
Size 2: Light weight interior doors	1132
Size 3: Average weight interior doors	1133
Size 4: Interior doors subject to drafts	1134
Size 5: Interior doors or exterior doors subject to drafts	1135

Door Opening And Closing Cycle

The door opening cycle compresses the springs and positions the fluid to control the other cycles.

The backcheck cycle is controlled by the backcheck valve. This cycle slows the door before making contact with door stop. This can easily be turned off for doors that open more than 90°. (A door stop must be used to stop the door.)

Two separate valves control the door closing and latching speeds. The closing cycle controls the speed of door closing from the fully opened position to approximately five inches from the closed position. The latching cycle controls this last five inches.

1. Opening Cycle
2. Backcheck
3. Closing Speed
4. Latching Speed

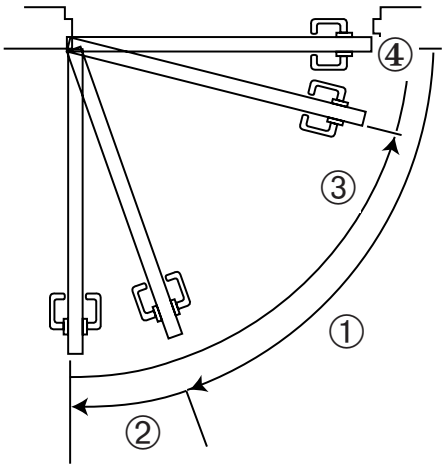

Standard Application

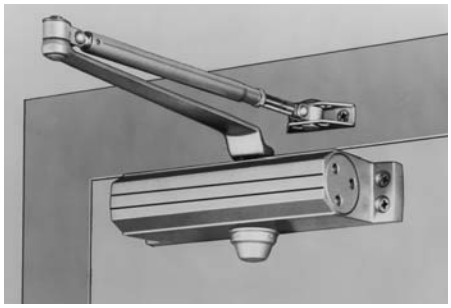

Closer mounts on pull side of door. Two mounting positions allowing opening up to 180° if wall and frame conditions allow.

Standard Mounting: Standard mounting provides maximum power allowing door to open 100°. Holding range of holder arm (hold open arm): 85°-100°.

Alternate Mounting: Closer installed to allow for 180° opening. Range of hold open arm from 85-180°
Maximum door opening: 180° if wall and trim conditions allow. Holding range of holder arm (hold open arm): 85°-180°. If butt, frame and wall conditions permit, closer will allow door to open 180°. Minimum top rail width required 2-1/2" for regular and hold open arm.

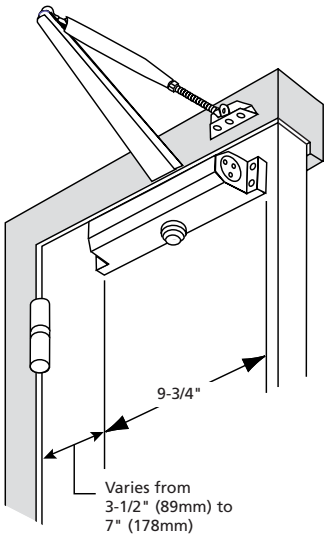

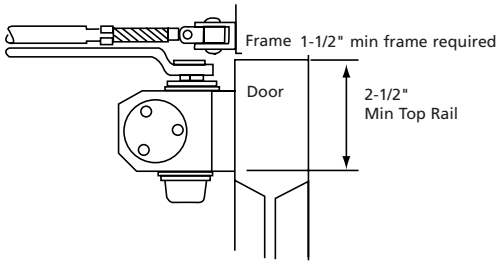

Approx.180° Door opening
with normal conditions

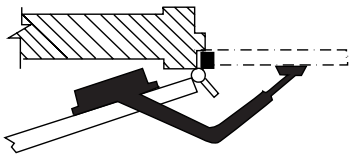

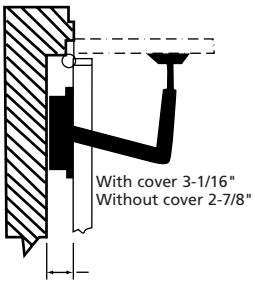

Parallel Arm Application

Closer mounts on top rail on stop side of door. Minimum top rail 5-1/4". As door opens, closer swings with door and gives full head room in door opening. For use on doors opening either in or out. Also used on two doors hung on the same frame with closer mounted between doors with a minimum of 5-1/4" in between doors. When two closers are used on different doors inside the same frame the minimum door size is 46".

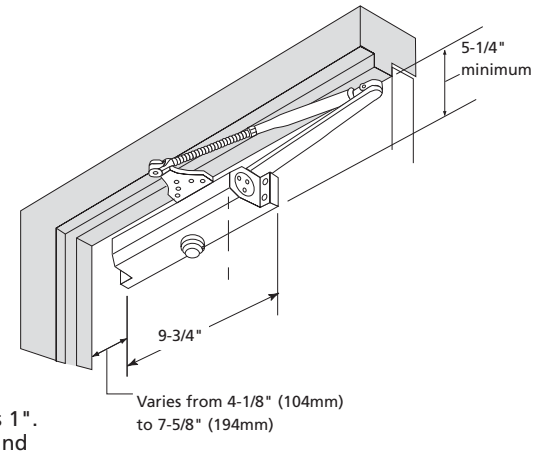

Standard Mounting: Standard mounting provides maximum power allowing door to open 100°. Holding range of holder arm (hold open arm): 85°-100°.

Alternate Mounting: Closer installed to allow for 180° opening. Range of hold open arm from 85-180°. Minimum width of stop required to mount foot bracket of arm is 1". Minimum mounting space required between two doors is 5-9/16" for regular arms and for holder arms.

Top Jamb Application

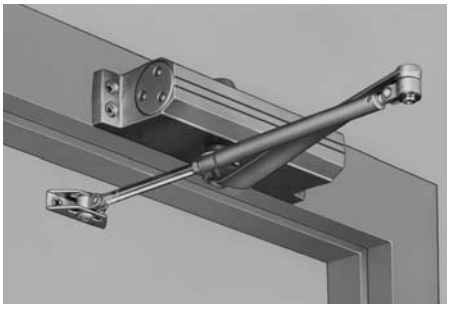

Closer mounts on top casing of push side of door. As door opens, closer arm swings with door. Mounting for reveals to 3".

Standard Mounting: Provides maximum power allowing door to open 100°. Holding range of holder arm (hold open arm): 85°-100°. An optional extra long rod assembly is required for deep reveals 3-1/8" (70mm) to 5-1/2" (140mm).
See below.

Alternate mounting: Closer installed to allow hinge to allow for 180° opening reveals less than 2". Range of hold open arm from 85-180°.

Minimum rail width on top casing required is 1-3/4". Minimum door rail width required to mount closer foot is 2-1/4", when frame without head stop is used (flush header).

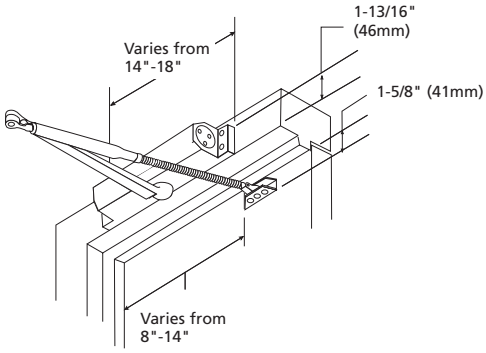

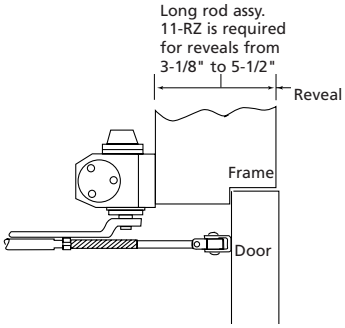

Optional Accessories

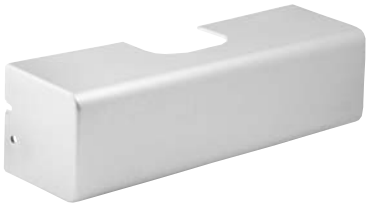

Full size non handed high Impact cover secured by two machine screws

Specify suffix "C" when ordering.

To order cover separately, use P/N 60-0535 x finish

Long Rod Assembly Non Hold Open Only
Optional 11-RZ Extension: Long rod assembly, converts regular and hold open arms for deeper reveals 3-1/8" up to 5-1/2"

Brackets (Included)

Regular Parallel "RU" Arm Bracket
Converts regular standard arm to parallel arm

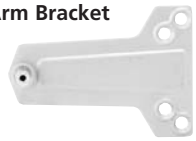

Hold-Open "HU" Arm Bracket
Converts the hold-open standard arm to hold-open parallel arm

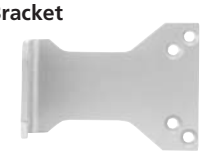

581-1 Blade Stop Kit

Kit includes longer fasteners and 1/2" thick metal spacer for use with 1/2" blade stops commonly found on store front aluminum frames

Used with JP9 and JHP9 arms

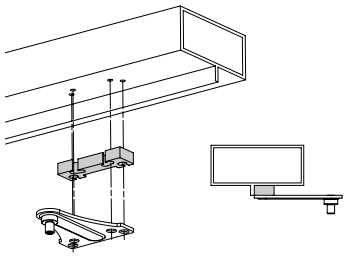

How to order complete door closer

		Example
Model #	1130, 1131, 1132, 1133, 1134, 1135	**1134**
Arm Type	RU or HU (Hold open)	1134 **RU**
Finish	EB – Bronze Enamel to match 10B EN – Aluminum Enamel EAB – Brass Enamel to be used with brass finishes	1134 RU **EB**

Packing

Approximate shipping weights and piece count per case		
1130 Series	4 per carton	22 lbs/case

1130 Series Door Closers Specifications

SARGENT
1-800-727-5477
www.sargentlock.com

Architectural Specifications

2.0 DOOR CLOSERS

A. Door closers shall be 1130 Series as manufactured by SARGENT Manufacturing Company, New Haven, CT.

B. Door closers shall meet ANSI/BHMA A156.4, Grade 1 requirements.

C. Door closers shall be UL listed (US and Canada) for use on fire doors.

D. Door closer shall meet the requirements of UL 10C positive pressure fire tests.

E. Provide closers adjustable from sizes 1 through 6.

F. Closers shall be non-handed to meet a variety of door conditions and design requirements.

G. Closing speed, latching speed and backcheck shall be controlled by separate key operated, captivated valves.

H. Closers shall have heat treated rack and pinion construction.

I. An increase of 15 percent in closing power shall be provided by means of adjustment of the arm leverage at the foot connection. (Standard Arm mount)

J. Closer main arms shall be heavy duty steel with powder coated finish.

K. Door closer bodies:

1. One piece door closer body shall be of high strength cast aluminum alloy
2. Adjustment valves shall be captivated and non-critical.
3. Closer spindle shaft shall be sealed hydraulically with an “O” ring.

L. Projection of closer body from door shall not exceed 2-3/16 inches (56mm).

M. Closer covers shall be constructed of high impact plastic material of flame retardant grade, secured by machine screws.

N. Closer covers shall be of the same style/design of other closers specified for this project.

O. Closers shall be suitable for standard, top jamb, and parallel arm type applications when provided with proper brackets and arms.

P. Door closers shall have a ten year limited warranty.

SARGENT Manufacturing Company • 100 Sargent Drive • P.O. Box 9725 • New Haven • CT 06536-0915
Phone: 800-727-5477 • Fax: 888-863-5054 • Web site: www.sargentlock.com
SARGENT of Canada • Phone: 905-940-2040 • Fax: 905-940-3242 • Web site: www.sargentcanada.ca

Founded in 1864, SARGENT® is a market leader in locks, cylinders, door closers, exit devices, electro-mechanical products and access control systems for new construction, renovation and replacement applications. The company’s customer base includes commercial construction, institutional and industrial markets.

The ASSA ABLOY Group is the world’s leading manufacturer and supplier of locking solutions, dedicated to satisfying end-user needs for security, safety and convenience.

An ASSA ABLOY Group company

ASSA ABLOY