SARGENT®

7 Line Cylindrical Lever Lock

An ASSA ABLOY Group company

ASSA ABLOY

7 Line Lever Lock Specifications

SARGENT
1-800-727-5477
www.sargentlock.com

Table of Contents

Features, Benefits & Applications 1
Lever & Rose Designs. 2
Functions 3
Prefixes & Strikes 4
How to Order, Finishes, Packaging, Architectural Specifications 5

Specifications

For Doors	1-3/4" (44mm) Thick Door standard 1-3/8" (35mm) Thick Door optional as 1- with 2-3/4" backset, 1-1/8" front 1-3/8" (35mm) Thick Door optional as 20- with 2-3/8" backset, 1"
Backset	2-3/4" (70mm) standard. 2-3/8" (60mm) optional as 20- prefix
Cylindrical Housing	Steel, zinc dichromate finish
Front	Wrought brass or stainless steel; Standard - 2-1/4" (57mm) x 1-1/8" (29mm), with 2-3/4" (70mm) backset Optional - 2-1/4" (57mm) x 1" (25mm), with 2-3/8" (60mm) backset (20- prefix) Floating bevel - 1/8" (3mm) x 2" (51mm)
Strike	Wrought brass or stainless steel 2-3/4" Curved Lip Strike standard 4-7/8" Curved Lip (28-) and 2-1/4" Full Lip (14-) Strikes Optional
Hand	Non-handed – B, L, P lever designs Handed – G and Y Coastal Series lever designs
Latch	Brass 1/2" (13mm) throw
Keys	Two, nickel silver
Cylinder	Brass, 6 pin, LA keyway standard Can be master keyed or grand master keyed
Finishes	3, 4, 10, 10B, 15, 26, 26D
Door Prep	ANSI A115.2 (160 & 161) Modified

Certification Compliance

ANSI	Meets ANSI A156.2 Series 4000 - Grade 2
UL	UL listed to U.S.A. and Canadian safety standards Listed for 3 Hour Doors
Positive Pressure	Meets UL 10C and UBC 7-2 (1997)
ADA	All levers conform to ADA requirements for barrier-free accessibility
California Code	Levers (L and P) conform to California Administrative Code Title 19 and 24

SARGuard™ Patent Pending

SARGuard Coating

- Finish coating available on all SARGENT product lines, utilizes a silver-based antimicrobial compound from AgION Technologies
- As an integral part of the finish coating, SARGuard lasts for the life of the hardware
- SARGuard coating permanently suppresses the growth of bacteria, algae, fungus, mold and mildew. It is effective against a broad spectrum of bacteria
- Non-toxic and completely safe. The AgION antimicrobial compound is EPA and NSF approved and FDA listed for use in medical and food preparation equipment
- Applications: Anywhere there is need for a clean environment (hospitals, laboratories, schools, medical centers, daycare, food processing etc.)

AgION

The AgION antimicrobial is not intended as a substitute for good hygiene. Coated products must still be cleaned to insure the surfaces will be free of destructive microbes. SARGENT makes no representations or warranties, express or implied, as to the efficacy of the AgION antimicrobial. A copy of the AgION warranty is available upon request.

On The Cover

- 7G05 X LL

7 Line Lever Lock
Features, Benefits & Applications

SARGENT
1-800-727-5477
www.sargentlock.com

Features & Benefits

A key-in-lever lock designed for standard duty commercial exterior and interior doors in offices, commercial interiors, medical clinics, government facilities and public buildings. Exceeds ANSI/BHMA A156.2 Standards for cycling and durability.

"Best Overall Lock in the Grade 2 Class"

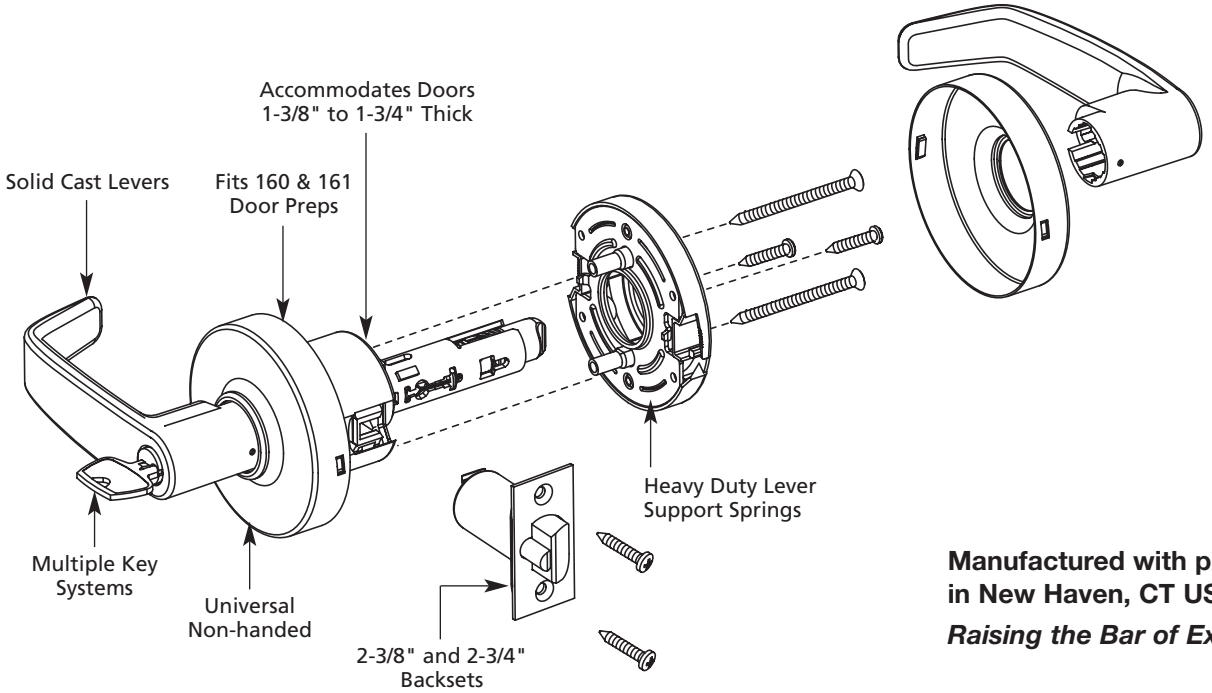

Manufactured with pride in New Haven, CT USA

Raising the Bar of Excellence!

Strength and Durability

- Cycle Test: Exceeds 2-1/2 times ANSI/BHMA A156.2 Grade 2 cycle requirements
- 5 Year limited warranty. No service required

Convenience

- Installs in 1 minute or less
- Non-handed design for ease of installation and efficient warehousing – with standard lever designs (Except G&Y)
- User friendly Packaging
- User friendly Instruction
- Convenient Installation diagram on box

Design

- Solid feel and precise lever action
- Decorative Levers — Coastal Series designs – Gulfport and Yarmouth
- Levers are solid one piece cast construction

Flexibility

- Fits both 160 & 161 door preps. Internal through-bolts supply strength and stability without requiring additional door preparation
- 7 Architectural grade finishes
- 10 Standard Functions (Special Functions available - 13, 16, 17, 24, 26, 30 and 44 - consult factory)
- SARGENT uses engineered solutions and flexible manufacturing processes to accommodate special applications

Security

- Torx® and spanner screws optional
- Security key systems available (V-10, Signature, XC, Keso, and Keso F1)
- Vandal resistant trim optional (FW- prefix)

Applications

- Standard duty commercial interior & exterior doors
- Offices
- Commercial interiors
- Medical clinics
- Government facilities
- Public buildings

Innovation

- SARGENT's revolutionary SARGuard™ available. This antimicrobial silver-based finish coating permanently suppresses the growth of bacteria, algae, fungus, mold and mildew. EPA and NSF approved and FDA listed

7 Line Lever Lock
Lever & Rose Designs

SARGENT
1-800-727-5477
www.sargentlock.com

B Lever Design

- Lever: B – Solid Cast

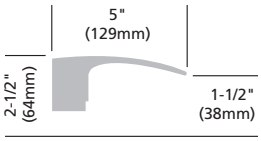

G Lever Design - Coastal Design - Gulfport

- Lever: G – Solid Cast
- Handed

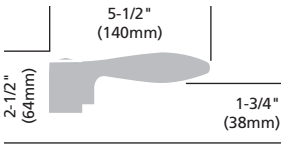

L Lever Design

- Lever: Lever: L – Solid Cast

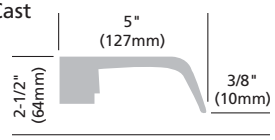

P Lever Design

- Lever: P – Solid Cast

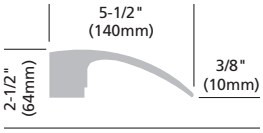

Y Lever Design - Coastal Design - Yarmouth

- Lever: Y – Solid Cast
- Handed

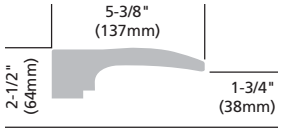

L Rose Design

- Heavy Wrought

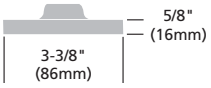

Note: All Height Dimensions are from the surface of the door.

7 Line Lever Lock Functions

SARGENT
1-800-727-5477
www.sargentlock.com

Single Cylinder Functions

04 Storeroom or Closet

7G04

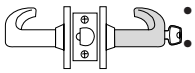

- Deadlocking latch
- Latch by lever inside or key outside
- Outside lever rigid at all times
- **ANSI F86**

05 Entrance or Office

7G05

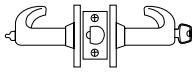

- Deadlocking latch
- Latch by either lever unless outside lever is locked by push/turn button in inside lever
- Push button released by key outside or lever inside
- Turn button must be released manually
- Key retracts latch when outside lever is locked
- **ANSI F81**

37 Classroom

7G37

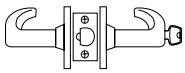

- Deadlocking latch
- Latch by either lever unless outside lever is locked by key
- Key in outside lever locks or unlocks outside lever and retracts latch
- Inside lever always operative
- **ANSI F84**

Non-Cylinder Functions

15 Passage

7U15

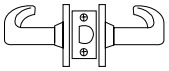

- Latch by either lever
- **ANSI F75**

15-3 Exit or Twin Communicating

7G15-3

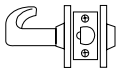

- Deadlocking latch
- Blank rose outside
- Latch by lever inside
- Minimum clearance of 2" required between doors

65 Privacy/Bathroom

7U65

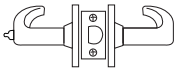

- Latch by either lever unless outside lever is locked by push button in inside lever
- Turning inside lever or closing door releases button
- Emergency button in outside lever unlocks, with use of a blade screw driver in outside lever and releases inside button
- **ANSI F76**

68 Hospital Privacy

10U68

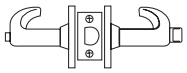

- Latch by either lever unless outside lever is locked by push button in inside lever
- Turning inside lever or closing door releases button
- Rotating thumbturn in outside lever unlocks the outside lever and releases the inside button

93 Single Lever Pull

7U93

- For wood or custom hollow metal doors
- Lever and rose attached by two through-bolts and two surface applied screws
- Requires special door preparation - see template

94 Double Lever Pull

7U94

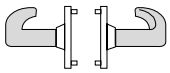

- For wood or custom hollow metal doors
- Lever and rose both sides by two through-bolts and four surface applied screws
- Requires special door preparation - see template

94-2 Double Lever Pull

7U94-2

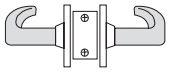

- Lever and rose attached by two through-bolts and four surface applied screws
- Dummy latch plate
- Requires special door preparation - see template

Freewheeling Locked Lever Option

- Available on all locking functions
- Provides protection from vandalism and added security
- Stops in rose prevent the lever from traveling beyond 60° in either direction

NOTE: Shaded lever indicates it is rigid at all times.

7 Line Lever Lock Prefixes & Strikes

SARGENT
1-800-727-5477
www.sargentlock.com

Prefix Designation and Description

1	For 1-3/8" door (Shim Kits) with 2-3/4" backset latch, 1-1/8" front
10	SARGENT Signature key system
11	SARGENT XC key system (not available w/10, 22, 30, 60, 63, 64, SC, SE, VA, VS prefixes)
14	505 Full lip strike
20	2-3/8" backset latch with 1" front and shim kits for 1-3/8" thick door
21	SARGENT Construction key system (lost ball) Standard on all new systems (est. since 5/1/96)
22	SARGENT Construction key system (split key) for pre-established split key systems only
28	Strike #808. Lip length 1-1/4" Lip lengths 1-5/8" to 2-7/8" in 1/4" increments only
30	Lever to accept Schlage cylinder – no cylinder provided
36	6 lobe security head screws
37	Spanner head screws
60	SARGENT Removable disposable construction core
63	SARGENT Removable core cylinder
64	SARGENT Removable construction core cylinder
65-73	Small format 6-pin uncombinated interchangeable core
65-73-7P	Small format 7-pin uncombinated interchangeable core
70	Small format interchangeable disposable plastic construction core
72	Small format interchangeable 6-pin construction
11-72-7P	SFIC construction core, used when 7 Pin permanent cores, to be installed
73	Small format interchangeable core, 6-pin. Existing systems require bitting list
73-7P	Small format interchangeable core, 7-pin. Existing systems require bitting list
11-73-7P	SFIC in 7 pin with XC feature
75	Handicap warning milled on backside of inside lever
76	Handicap warning milled on backside of outside lever
77	Handicap warning milled on backside of both levers
80	Levers to accept Keso and Keso F1 Cylinders - no cylinders provided
82	SARGENT KESO security cylinder
F1-82	SARGENT Keso F1 Security cylinder
FW	Freewheeling locking levers
SC	Schlage C keyway cylinder, 0 bitted
SE	Schlage E keyway cylinder, 0 bitted
SG	SARGuard™ – an antimicrobial powder coat
VA	SARGENT V-10 standard cylinder
VS	SARGENT V-10 standard un-assembled cylinder

2-1/4" Full Lip Strike (14- prefix)

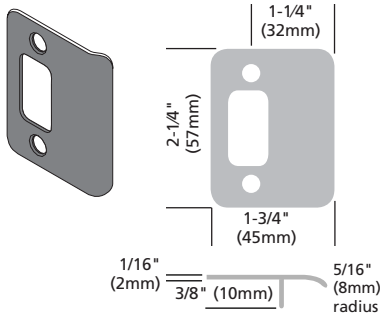

- Furnished standard with curved lip 1-1/4" (32mm) from center of strike screw holes to end of lip
- No other lip lengths available
- To order strike separately, specify: 505 strike x finish
- Finishes: 3, 4, 10, 10B & 32D

Strikes

- Finishes: 3, 4, 10, 10B, 32D

2-3/4" Curved Lip Strike – Standard

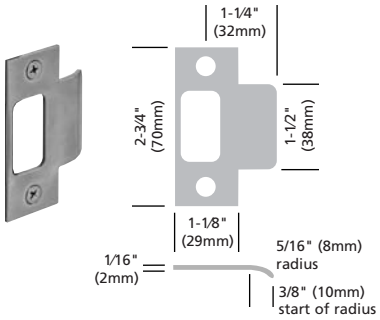

- Furnished standard with 1-1/4" (32mm) curved lip from center of strike screw holes to end of lip
- Lip lengths 7/8" (22mm), 1" (25mm), 1-1/4" (32mm) standard, 1-1/2" (38mm), 1-3/4" (44mm) and 2" (51mm)
- To order strike separately, specify 600 strike x finish x lip length

4-7/8" Curved Lip Strike: (28-Prefix)

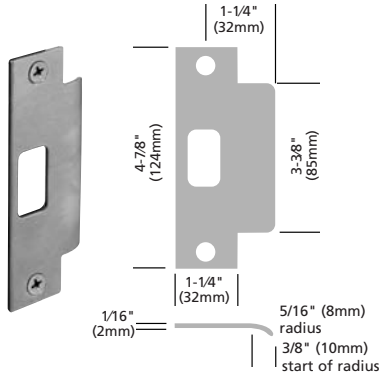

- Conforms to ANSI standard
- Furnished standard with curved lip 1-1/4" (32mm) from center of strike screw holes to end of lip
- Lip lengths 7/8" (22mm), 1-1/8" (29mm), 1-1/4" (32mm), 1-3/8" (35mm), 1-5/8" (42mm), 1-7/8" (48mm), 2-1/8" (54mm), 2-3/8" (60mm), 2-5/8" (66mm), 2-7/8" (73mm)
- To order strike separately, specify 808 strike x finish x lip length

7 Line Lever Lock
How to Order, Finishes, Packaging & Architectural Specifications

SARGENT
1-800-727-5477
www.sargentlock.com

How to Order

Specify	Note	Example
Quantity	Number ordered	**1 Qty**
Prefix*	Additional feature	1 Qty **21-**
Lock Function	See functions	1 Qty 21-**7G05**
Trim Design	Rose x lever	1 Qty 21-7G05 **LL**
Finish	See finishes	1 Qty 21-7G05 LL **26D**
Additional Information	Item/Heading number, Door number, Keyset information	1 Qty 21-7G05 LL 26D X **item 01 x DRL201 x keyset AA3**

* Can choose multiple prefixes

Finishes

US Finish	Descriptions	ANSI/BHMA
3	Polished brass, clear coated	605
4	Satin brass, clear coated	606
10	Satin bronze, clear coated	612
10B	Oxidized bronze, oil rubbed	613
15	Satin nickel, clear coated	619
26	Polished chrome	625
26D	Satin chrome	626
SG	SARGuard™ available on all finishes except 10B (613)	

Zinc levers are plated to match BHMA finish.
Split finishes available. Specify outside finish first.
Custom colors available, consult factory.

Packaging

7G04 x LL
4.3 lbs (1.95 kg)
1 box
41 lbs (18.6 kg)
10 boxes/case

6 Lobe & Spanner Bit Packs

Part Number	Descriptions
82-3855	6 Lobe bit pack 6 bits (sizes- T8, T9, T10, T15, T20, T25, T27) Requires 9/32" driver
82-3856	Spanner bit pack 5 bits (sizes- 4, 6, 8, 10, 12) Requires 1/4" driver

Latch Assemblies

Part No.	Description
07-2430	2-3/4" (70mm) standard (deadlocking latch)
07-2432	2-3/4" (70mm) standard (latch)
07-2431	2-3/8" (60mm) 20 Prefix (deadlocking latch)
07-2433	2-3/8" (60mm) 20 Prefix (latch)

Suggested Architectural Specifications

2.0 Cylindrical Locks

A. Locks shall be 7-Line as manufactured by SARGENT Manufacturing Company, New Haven, CT.

B. Locks shall meet or exceed 2-1/2 times the cycle requirements of ANSI/BHMA A156.2 Series 4000, Grade 2 with all standard trims.

C. Locks shall be non-handed with bi-directional lever operation, except the “G” and “Y” lever designs.

D. Lock levers shall be made of solid material.

E. Lock shall be available in a minimum of five lever designs.

F. Locks shall comply with UL10C and UBC 7-2 positive pressure requirements.

G. Locks required for fire doors shall be listed by Underwriters Laboratories for ratings of 3 hour (A label) and less.

H. Locks shall mount in a standard 161 door prep (2-1/8 inch dia.) without additional through-bolt preps.

I. Locks shall have a 2-3/4 inch (70mm) backset standard, with 2-3/8 inch (60mm) offered as an option.

J. Strikes shall be non-handed with a curved lip. Provide wrought boxes with strikes.

K. Locks shall have brass 6-pin cylinder, standard.

L. Provide two, nickel silver keys with each lock.

M. Locks shall have a five year limited warranty.

SARGENT Manufacturing Company • 100 Sargent Drive • P.O. Box 9725 • New Haven • CT 06536-0915
Phone: 800-727-5477 • Fax: 888-863-5054 • Web site: www.sargentlock.com
SARGENT of Canada • Phone: 905-940-2040 • Fax: 905-940-3242 • Web site: www.sargentcanada.ca

Founded in 1864, SARGENT® is a market leader in locks, cylinders, door closers, exit devices, electro-mechanical products and access control systems for new construction, renovation and replacement applications. The company's customer base includes commercial construction, institutional and industrial markets.

The ASSA ABLOY Group is the world's leading manufacturer and supplier of locking solutions, dedicated to satisfying end-user needs for security, safety and convenience.