SARGENT®

Keso F1 Security Systems

An ASSA ABLOY Group company

ASSA ABLOY

Keso F1 Security System Specifications

SARGENT
1-800-727-5477
www.sargentlock.com

Table of Contents

Features, Benefits & Applications 1
Mortise Type Cylinders 2
Rim Type Cylinders. 3
Key-In-Knob/Lever Cylinders 4
Removable/Construction Cores and General Information. 5
Padlocks, Switch Locks, Locker Locks & Utility Locks 6
UL Listed Keso F1 and Keso Security System Cylinders. 7
Cams for Keso F1 and Keso Security Cylinders 8
Field Maintenance, Keso F1 and Keso Service Center & Shipping Information . . 9
How To Order . . . . . Back cover

SARGENT Keso F1- Security System

The Proprietary Key System

The system offers the building owner full control over duplication of keys, highly pick resistant cylinders, expanded levels of masterkeying and many more safe day key changes. The SARGENT Keso F1 Security System is available for all SARGENT mortise locks, key-in-knob 8 Line, 9 Line, key-in lever 10 Line, 11 Line, 80 Series and 90 Series exit devices. Removable core and construction core cylinders are included in the system as well. Non-removable core mortise and rim cylinders are available in a UL437 version.

SARGENT will continue to offer and support the original Keso cylinder and keys, but we encourage users to easily upgrade their systems by integrating Keso F1 into their system. The Keso F1 is an enhanced and patentable (Patent Pending) version of the original Keso. All SARGENT products offered with the Keso F1 are still available with the original Keso cylinders and keys. To order the original Keso, simply leave off the F1- prefix, as specified in this catalog.

Special Note: The Keso F1 keys will operate Keso F1 cylinders and existing Keso cylinders, but existing Keso keys will NOT operate new F1 cylinders.

Suggested Architect's Specification

2.0 KEYING – Keso F1 SERIES

A. Cylinders and keys shall be SARGENT Keso F1 Series by SARGENT Manufacturing, New Haven, CT.

B. Each cylinder shall contain at least twelve key pins.

C. Cylinders shall not contain splits or master key pins.

D. Each keying system shall offer at least seven levels of master keying, and regardless of the level of master keying, there must be a minimum of 100,000 unduplicated, safe and usable key combinations available.

E. Provide high security removable core cylinders, with patent pending key control, for each lock with temporary construction cores. Permanent cores shall be installed upon completion of the project.

F. Cylinders shall meet the requirements of UL437.

G. Master key or Grand master key cylinders and key in groups, unless otherwise specified. Factory master key with manufacturer retaining permanent keying records.

H. Provide 6 master keys for each master key set. Provide 3 change keys for each lock. Provide 2 control keys for core removal. Stamp keys "PATENT PENDING."

I. Provide key list, in electronic format, for import directly into KeyWizard key control software.

J. Submit proposed keying schedule to Architect. If requested, meet with Owner and Architect to review schedule.

On The Cover

- Keso F1 Key

Keso F1
Features, Benefits & Applications

SARGENT
1-800-727-5477
www.sargentlock.com

Features & Benefits

The new SARGENT Keso F1 Security System offers the building owner full control over field duplication of keys, highly pick resistant cylinders, expanded levels of master keying and a proprietary patent pending key system. With the Keso F1 cylinder, it is impossible to determine the configuration of the key system or its upper level master keys by examining the pinning configuration, providing the highest level of key system security available on the market today!

The Keso F1 cylinders incorporate the same unique 12 pins as in the time proven Keso product line along with advanced patent pending features. These features are compatible with existing Keso key systems. Existing Keso users can integrate F1 products into their systems in order to regain control of master keying quickly and effectively.

New F1 keys will operate existing Keso cylinders, but existing Keso keys will not operate new Keso F1 cylinders.

The Keso F1 cylinder has 12 pins located in 3 rows on 3 intersecting axes, making it virtually impossible to gain access through manipulation. The position of the pin holes and the length of the pins in each row vary. While maintaining the 3 banks of pins, the Keso F1 product adds an additional dimpling dimension to the key blank offering a greater range of both change and master key combinations. This greatly expands master keying capabilities to both new and existing end users.

The F1 key is symmetrical and reversible. The dimpled key requires sophisticated key-cutting equipment. The unique 6-sided F1 key is not warded or cut away and therefore much stronger than a conventional key. This makes it an ideal choice for highly abusive applications. Each keying system has its own unique combination of key pin lengths and positions. There is never a chance of one keying system duplicating another.

Keso F1 UL437 versions provide a maximum level of pick and drill resistance. Perfect for any high abuse application that requires strict key control and resistance to vandalism. UL437 versions are available for mortise and rim cylinders.

Conventional Cylinder

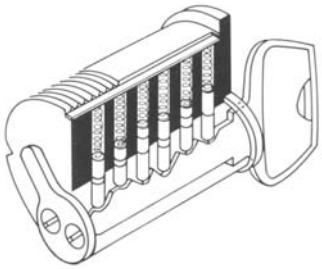

Keso F1 Cylinder

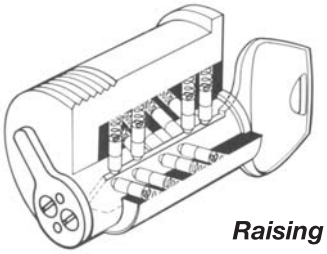

Raising the Bar of Excellence!

Strength & Durability

- Cylinder has 12 pins unlike most cylinders with only 6 pins
- Unique 6-sided dimpled key is much stronger than warded keys
- Precise manufacturing and the absence of splits makes the cylinder highly pick-resistant

Convenience

- Compatible with existing non-patented Keso key systems
- UL 437 version available for mortise and rim cylinders
- Key is symmetrical and reversible
- Removable core versions available
- Temporary Construction core available

Flexibility

- Up to 7 levels of master keying available
- 100,000 different key pin patterns available within any one installation
- Keso F1 cylinders can be retrofitted to original Keso cylinders
- Keso F1 key will operate existing old style Keso cylinders

Security

- Patent pending protection for both key and cylinder
- F1 keys can not be legally duplicated
- Owners' authorization required for any F1 keys/locks
- Pick resistance
- Impossible to determine configuration key system by examining pinning configuration

Applications

- Government Buildings
- Hospitals
- Schools
- Colleges
- Detention Centers
- Psychiatric wards
- Any high abuse application that requires strict key control and resistance to vandalism

Keso F1 Security System
Mortise Type Cylinders

SARGENT
1-800-727-5477
www.sargentlock.com

Mortise Type Cylinders

F1-70 Series Mortise Type Cylinders

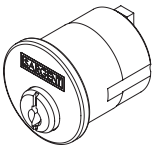

Brass, bronze and stainless steel.
Finishes: 3, 4, 9, 10, 10B, 10BL, 20D, 26, 26D, 32, 32D.

Furnished standard with No. 97 cylinder rosette when ordered less hardware.

Hotel or 50 function mortise locks require a 50 Function cylinder and a 50 Function cam (p/n 13-2283). The cylinders for the hotel/50 function mortise locks are specified with a -2 Suffix.

Special short cams (p/n 13-2522) are required for the inside cylinder of 16 and 92 function mortise locks. Inside cylinders for 16 & 92 function Mortise cylinders are specified with a -8 Suffix.

When no cam is specified, the SARGENT standard offset cam (p/n 13-2563) will be supplied. See page 8 for cam options.

Note: SARGENT's Hotel function Mortise Lock's designation is 50 function.

F1-170 Series Removable Core Mortise Type Cylinders

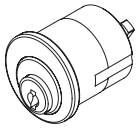

Brass, bronze and stainless steel.
Finishes: 3, 4, 9, 10, 10B, 10BL, 20D, 26, 26D, 32, 32D.

Core supplied in either 4 or 26D finish. Furnished standard with No. 97 cylinder rosette when ordered less hardware.

Special short cams (p/n 13-2522) are required for the inside cylinder of 16 and 92 function mortise locks, Inside cylinders for 16 & 92 function Mortise Locks are specified with a -8 Suffix.

Removable core cylinders are not available for hotel function mortise Locks (50 Function). When no cam is specified, the SARGENT offset cam (p/n 13-2563) will be supplied.

The cam is directly attached to the core. Only SARGENT offset cams (13-2563) and 16 & 92 function inside cam (13-2522) and Adams Rite cam (13-2521) are available on the removable core series.

How to Order Keso F1 Mortise Cylinders

Mortise Cylinder Lengths	Keso F1 Mortise Cylinder with a Standard Cam	50 Function Keso F1 Cylinders with a Hotel Cam (70-2 Cam)	Keso F1 I/S Cylinder for 16 & 92 Functions with a 70-8 Cam
1-1/8"	F1-71	N/A	F1-71-8
1-1/4"	F1-72	F1-72-2	F1-72-8
1-3/8"	F1-73	F1-73-2	F1-73-8
1-1/2"	F1-74	N/A	F1-74-8
1-3/4"	F1-76	N/A	F1-76-8

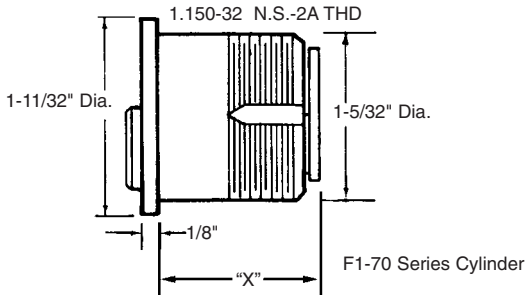

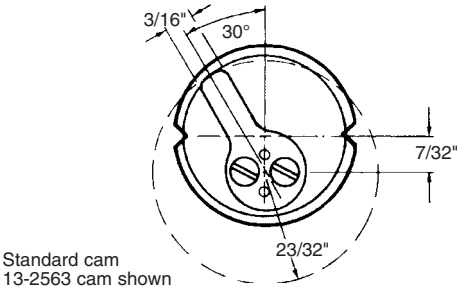

How to Order Keso F1 Removable Core Mortise Cylinders and Cores

Mortise Cylinder Lengths	F1-83-Keso Removable Core Mortise Cylinders with a Standard Cam	F1-83-Keso Removable Cores Only with Standard Cam	F1-83-Keso Removable Core Mortise I/S Cylinders for 16 & 92 Functions with a 70-8 Cam	F1-83-Keso Removable I/S Core with a 70-8 Cam, Only for 16 & 92 Function	84-Keso Removable Construction Core Mortise Cylinders with Standard Cam	84-Keso Removable Construction Core Mortise I/S Cylinder with a 70-8 Cam for 16 & 92 Functions
1-1/8"	N/A	N/A	N/A	N/A	N/A	N/A
1-1/4"	F1-172	F1-5172	F1-172-8	F1-5172-8	84-172	84-172-8
1-3/8"	F1-173	F1-5173	F1-173-8	F1-5173-8	84-173	84-173-8
1-1/2"	F1-174	F1-5174	F1-174-8	F1-5174-8	84-174	84-174-8
1-3/4"	F1-176	F1-5176	F1-176-8	F1-5176-8	84-176	84-176-8

Note: A Keso F1- Removable Core is determined by the Keso F1- Core, not the housing. This is why 84- is a non F1- Product, The Housings for Keso F1- 83- and 84- are the same housings.
Note: 84-Removable Construction Core Cylinders are for temporary use and are NOT available in Keso F1. Once construction is completed the Keso F1-83- Removable Cores will be installed (16 & 92 Functions require the -8 Suffix).
Note: Keso F1 Removable Core Cylinders are not available for 50 Function Hotel Locks.

Rim Type Cylinders

F1-64 Series Rim Type Cylinders

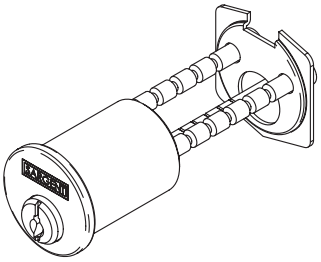

Brass, bronze and stainless steel
Finishes: 3, 4, 9, 10, 10B, 10BL, 20D, 26, 26D, 32, 32D.

For use with SARGENT Exit Devices.

When ordered separately, cylinders will be furnished with "Break-off" screws, back plate, and No. 97 cylinder rosette.

F1-164 Series Rim Type Removable Core Cylinders

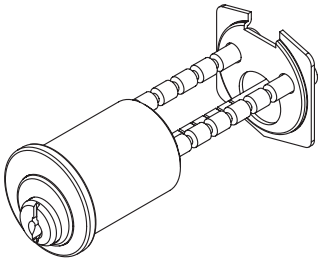

Brass, bronze and stainless steel
Finishes: 3, 4, 9, 10, 10B,10BL, 20D, 26, 26D, 32, 32D.

For use with SARGENT Exit Devices. Use 84- Prefix when construction keying is needed.

When ordered separately, cylinders will be furnished with "Break-off" screws, back plate, and No. 97 cylinder rosette.

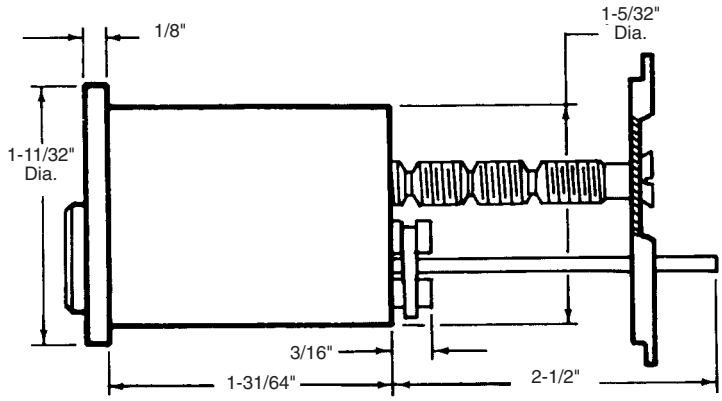

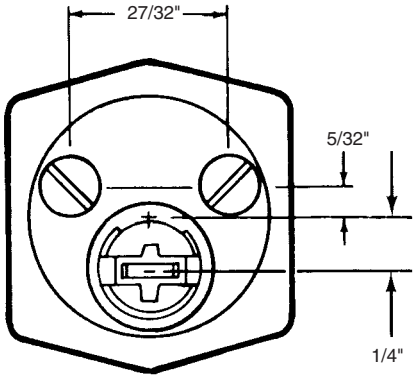

How to Order Keso F1 Rim Cylinders Only (For Exits)

Door Thickness without Trim	F1-82 Keso Rim Type Cylinder	F1-83-Keso Rim Type Removable Core Cylinders	F1-83-Keso Rim Type Removable Cores Only	84-Keso Rim Type Removable Construction Core Cylinders
1-3/4" to 3-1/8"	F1-64	F1-164	F1-5164	84-164

Note: A Keso F1- Removable Core is determined by the Keso F1- Core, not the housing. This is why 84- is a non F1- Product, The Housings for Keso F1- 83- and 84- are the same housings.
Note: 84-Removable Construction Core Cylinders are for temporary use and are NOT available in Keso F1. Once construction is completed the Keso F1-83- Removable Cores will be installed.

Keso F1 Security System
Key-In-Knob/Lever Cylinders

SARGENT
1-800-727-5477
www.sargentlock.com

Key-In-Knob/Lever Cylinders

Many designs and functions in the 8, 9, 10 and T-Zone (11 Line) can be furnished with the New SARGENT Keso F1.

Note:
1) 8 Line and 9 Line installations with conventional key-in-knob cylinders can be changed to the new SARGENT Keso F1 Security System by replacing the complete cylinder knob assembly.

2) Locksets with levers with conventional cylinders can not be upgraded to Keso F1- or Standard Keso cylinders.

3) Present Keso Systems can be upgraded to the Keso F1- System.

For information regarding available designs, functions and finishes, refer to the particular Bored Lock Catalog for the line in question.

F1- Cylinders Only for Key-In-Knob Locks

F1-82-48-2 shown

Key-In-Lever 10 Line and T-Zone (11 Line)

F1-82- Prefix

Keso F1 Cylinder
F1-82-10-1

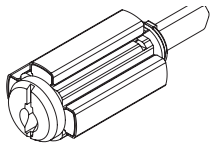

Cylindrical Key-In-Knob Removable Cylinders

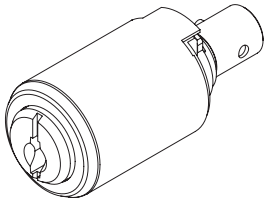

How to Order Keso F1 Cylinders for 7, 10 & 11 Line Locks

Keso F1	Keso F1
All 7 & 10 Line Functions	All 11 Line Functions
F1-82-10-1	F1-2094

Note: 50 Function Keso F1 Cylinders are not available with 10 or 11 line locks. (50 function not available for 7 line)
Note: Removable Cores Cylinders are NOT available for 7, 10 or 11 Line Locks.
Note: SARGENT Keso F1 Systems are available with L, P and B Levers.

How to Order Keso F1 Cylinders for 8 & 9 Line Locks

F1-82-Keso Cylinder for 8 & 9 Line Functions Except for the 50 Function	F1-82-Keso Cylinder for 8 & 9 Line 50 Functions Locks Only	F1-83-Keso Removable Cylinder for 8 & 9 Line Functions Except for the 50 Function	84-Keso Cylinder for 8 & 9 Line Functions Except for the 50 Function
F1-82-48-1	F1-82-48-2	F1-83-48-1	84-48-1

Note: 84-Removable Construction Cylinders are for temporary use and are NOT available with F1 Keso. Once construction is completed the Keso F1-83- Cylinders will be installed.

Note: 50 Function/Hotel is not available with removable core.

SARGENT
1-800-727-5477
www.sargentlock.com

Keso F1-83- Removable Cores and Keso 84- Removable Construction Core Cylinders

The SARGENT Keso 84- security removable construction core system protects the security of an owner's masterkey system during the time of building construction. It is in use throughout the construction period in lieu of the permanent masterkeyed cores. This prevents the keys to the permanent system from becoming available to unauthorized persons. Upon completion of the building, the temporary construction cores and all keys (day and control) for the construction core system become inoperative.

Removable construction core cylinders are available for SARGENT mortise locks, 8 and 9 Line (except for 50 function) and exit devices with mortise and rim cylinder only.

SARGENT Keso 84- temporary removable construction cores are designated by:

- Brown oxidized finish on cylinder sleeves
- Bright chrome cylinder barrels with 1/8" diameter hole drill point in upper right hand area of barrel head
- All keys are stamped “CONST” with 1/8" diameter hole drilled through the upper right hand corner of the key bow
- All removable construction cores will be keyed alike in one KA set and furnished with 6 keys and 1 control key. These are packed separately and shipped to distributor for delivery to general contractors. Additional keys supplied upon request.

When the construction core system is to be used, the order must be entered with an individual item number for each key lock. Where room or opening numbers are shown on the plans, this information should also appear with each lockset. Each removable construction core system will be supplied with a total of 6 day keys and 1 construction control key unless specified .

All key locks ordered will be shipped with temporary removable construction cores. To order, prefix the lock number with 84 (Example: 84-8205). A separate order for permanent cores, with all necessary keying information and item numbers for identification purposes, should accompany the lockset order. Upon proper authorization, the permanent cores will be shipped directly to the distributor and not to the job site.

For ordering permanent cores, refer to pages 3 and 4. It will be the distributor's responsibility to:

- Deliver all permanent cores to the job site
- Remove all temporary construction cores and insert permanent cores
- Inspect each lockset to insure that all permanent cores are operating satisfactorily
- Deliver to building owner all day, master and control keys for the permanent system
- Return all temporary construction cores to New Haven on a regular return goods authorization basis

All locksets ordered with removable construction core cylinders will be invoiced at the regular price established for prefix 83. A separate invoice will be issued to cover the permanent cores at prices listed for removable cores. Upon return of temporary removable construction cores to New Haven, CT., a credit will be issued covering the quantity of cores returned at the prices listed for construction cores.

84- Removable Construction Core Cylinders

To order cylinders only (housing & core), specify as follows:

Mortise–Add prefix 84- to removable core cylinder number **(Example: 84-172)**. Not available for 50 function. (See Chart on Page 2)

Rim Type – Add prefix 84- to removable core cylinder number **(Example: 84-164)**. (See Chart on Page 3)

Removable Cores Only, Mortise and Rim Type

To order, see charts on Pages 2 and 3.

Removable Construction Cylinders

To order cylinders only:

8 Line, 9 Line – Specify as **84-48-1** (all functions except 50). (See Chart on Page 4)

To order permanent removable cylinders for 8 Line, 9 Line - Specify as F1-83-48-1. (See Chart on Page 4)

General Information

INTERCHANGEABILITY

Mortise and rim type SARGENT Keso F1 Security System cylinders are interchangeable with conventional SARGENT cylinders now in use. SARGENT Keso F1 Security System cylinders for key-in-knob 8 and 9 Line can be substituted for conventional cylinders now in use by changing the cylinder knob assembly. When ordering replacement cylinder knob assemblies for 8 and 9 Line consult current catalog offering and specify function, trim and finish.

REMOVABLE CORE CYLINDER FOR HOTEL FUNCTIONS

Removable core cylinders are not available for hotel function in any lock line.

CONTROL KEYS FOR REMOVABLE CORE SYSTEMS

It is recommended that a removable core system utilize the minimum number of locks possible under any single control key.

The most secure condition would be for one control key to operate one lock. A control key allows access to the cylinders to which it is keyed and should be safeguarded in the same manner as a masterkey.

All orders for removable core systems must clearly state the keying level at which the control key will operate.

MASTERKEY SHIPMENTS

Masterkeys specified in the original order are shipped to the SARGENT distributor for delivery to the building owner. Upon delivery, the building owner will be required to sign the Masterkey Receipt Card (Form G831). The completed card must bear an authorized signature, as it appears on the Signature Authorization Card (Form G825), and then must be returned to SARGENT Mfg. Co. by the distributor.

Keso F1 Security System Padlocks, Switch Locks, Locker Locks and Utility Locks

SARGENT
1-800-727-5477
www.sargentlock.com

How to Order:

Padlock No. F1-82-856 and F1-82-857

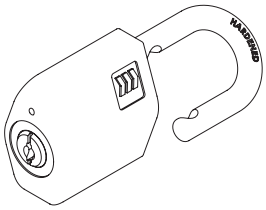

- Same security as offered in other Keso Security System locks. Can be masterkeyed with all locks in the system.
- Positive deadlocking construction – none of the springs can be forced
- Two stainless steel balls lock shackle. Forcing of shackle increases locking action
- Available with standard brass or optional hardened steel shackle
- Brass case

No. 6013 Weather Shield Kit
Helps prevent freezing in winter and keeps water and debris from entering lock case. Can be used on all padlocks having a 11/32" shackle.

SPECIFICATIONS
Removable core not available.

Padlock Number	Description
F1-82-856	Nickel plated brass shackle
F1-82-856C	Nickel plated brass shackle and 9" nickel plated brass chain
F1-82-856HS	Nickel plated hardened steel shackle
F1-82-856HSC	Nickel plated hardened steel shackle and 9" nickel plated brass chain
F1-82-857	Key removable in locked position only
Case Finishes	Satin brass standard. Dull chrome (26D) on order
Case Dimensions	2"x2"x1-1/8"
Shackle	Brass or hardened steel, nickel plated
Shackle Diameter	11/32"
Shackle Clearance	1" standard. 2-1/2" and clearance on order
Chain and Clevis	Brass, nickel plated

Switch Lock No. F1-4153

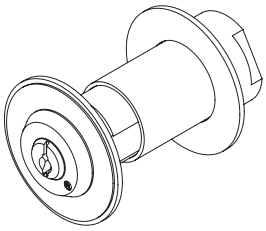

Keso F1 Security System cylinder operates a single pole, double throw U.L. Listed Switch.

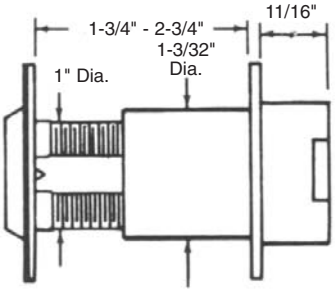

Locker Lock No. F1-82-1654

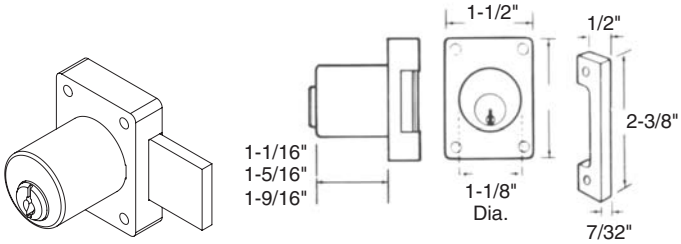

Finishes: 3, 4, 10, 26, 26D
For Doors: 1-1/8" and 1-3/8" thick.
Can be used for door 7/8", BUT WITH PROJECTION
For Stiles: 1-1/2" wide and over
Reversible: Right or left hand
Cylinder: Keso F1 Security System.
Can be masterkeyed with all other locks in the system.
Cylinder Shell: Brass or bronze
Case: Zamak #3
Bolt: Steel, 15/16" projection
Strike: Zamak #3, universal
To order, specify door thickness.
Example: F1-82-1654 1-1/8

Utility Lock No. F1-4152

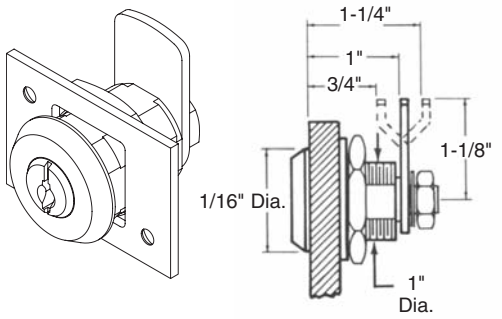

Finishes: 3, 4, 10, 26, 26D
For Drawers: Up to 3/4" thick
Cylinder: Keso F1 Security System.
Can be masterkeyed with all other Keso locks in the system.
Reversible: Right or left hand
Cam: Steel, flat (order as F1-4152) or 1/4" offset (order as F1-4152-2)
Mounting Plate: Furnished with screws for mounting to wood or metal drawers. Can be brazed to metal doors.

How to Order:

UL437 Listed Keso F1 Security System Cylinders

UL437 Listed cylinders have the same basic construction as standard SARGENT Keso F1- Security System cylinders with additional pick and drill resistant features.

These UL437 Listed cylinders contain additional hardened steel pins that may not be compatible with existing key systems. Consult SARGENT Key Records Department for compatibility. Generally, U.L. Listed cylinders can be keyed into the total system if the requirement is known at the time the system is established.

U.L. performance tests are specified in standards for safety – Key locks (U.L. 437, First Edition, Underwriters Laboratories, Inc., Chicago, Illinois) as follows:

"The lock cylinder shall resist for at least ten minutes any of the following or other tests suggested by study of the design. Recognized lock experts may be called in to assist in these tests."

"The cylinder shall resist aligning the tumblers and opening the lock by means of picking tools."

"The cylinder shall resist drilling the plug or body of the cylinder, releasing the tumblers, and opening the lock."

"The cylinder shall resist opening the lock by forcing a small cold chisel or screw driver into the key slot and applying rotary force with a pair of pliers or a wrench."

F1-4264 Rim Cylinder

Listed in Underwriters Laboratories, Inc. Burglary Protection Equipment List under locking cylinders (241 012).
Finishes: 10, 26, 26D

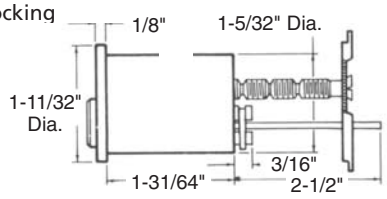

No. F1-4264 are furnished with "Break-off" screws, back plate and No. 99 cylinder ring. Break-off screws are located above horizontal centerline, same as standard No. 64 cylinder.
For use with SARGENT exit devices.

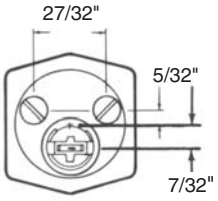

F1-4270 Series Mortise Lock

Listed in the Underwriters Laboratories, Inc. Burglary Protection Equipment List under locking cylinders (241 012).
Finishes: 10, 26, 26D

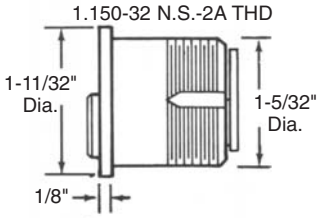

Nos. F1-4271, F1-4272, F1-4273, F1-4274, F1-4276
Diameter of cylinder under cylinder head: 1-5/32"

How to Order F1-4270 Series Mortise Cylinders

Mortise Cylinder Lengths	1-1/8"	1-1/4"	1-3/8"	1-1/2"	1-3/4"
Series F1-4270 Cylinder	F1-4271	F1-4272	F1-4273	F1-4274	F1-4276

F1-4252 Utility Lock

Listed in Underwriters Laboratories, Inc. Burglary protection Equipment List under locking cylinders (241 012).
Finishes: 10, 26, 26D

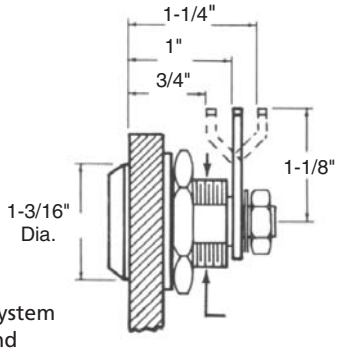

For Doors: Up to 3/4" thick
Cylinder: Keso F1 Security System
Reversible: Right or left hand
Cam: Steel, flat (order as F1-4252) or 1/4" offset (order as F1-4252-2)
Mounting Plate: Furnished with screws for mounting to wood or metal doors. Can be brazed to metal doors.

F1-4253 Switch Lock

Keso F1 Security System cylinder operates a single pole, double throw U.L. Listed in the Underwriters Laboratories, Inc. Burglary protection Equipment List under connectors and switches (25L30).
Finishes: 26

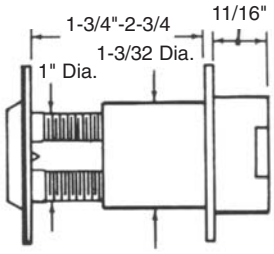

Electrical Switch (U.L. Listed) – max rating:
250 vac – 5 amp.
30vdc – 3 amp.

Operation: Turn key 90° right or left (until stop is reached). Return key to vertical position and remove. Key is removable in vertical position only.

Keso F1 and Keso Security System Cams for Keso F1 and Keso Security Cylinders

SARGENT
1-800-727-5477
www.sargentlock.com

Cams for Keso F1 and Keso Security Cylinders

Listed below are the cams available for Keso F1 and Keso Security System cylinders. There are five special cams for cylinders used with other manufacturers' locks. Since there may be several cam variations within one manufacturer's lock line, a thorough check of all lock functions should be made whenever Keso F1 and Keso Security System cylinders are being considered for use in other manufacturers' locks.

Description	Application	Order # For Complete Cyl. Assembly With Cam	Cam Part # When Ordered Separately
Regular Cam	F1-71 thru F1-76, F1-172 thru F1-176 71 thru 76 and 172 thru 176	F1-71 thru F1-76, F1-172 thru F1-176 71 thru 76 and 172 thru 176	13-2563
#2 Vertical Hotel Cam	F1-72-2, F1-73-2, 72-2 and 73-2 Mortise Cylinders	F1-72-2, F1-73-2, 72-2 and 73-2 for function 50	13-2283
#8 Short Offset Cam	Inside cylinder for 16 and 92 function	F1-71-8 thru F1-76-8 and F1-172-8 thru F1-176-8, 71-8 thru 76-8 and 172-8 thru 176-8	13-2522
#47-70-101 and #47-170-101 Offset Cams	Adams Rite MS1850 series locks only. Packed standard with #90-1/8" blocking ring	F1-47-71-101 thru F1-47-76-101, F1-47-172-101 thru F1-47-176-101, 47-71-101 thru 47-76-101 and 47-172-101 thru 47-176-101	13-2521
#47-70-104 and #47-170-104 Offset Cams	Adams Rite locks 4050, 4150, 4250, 4350, and 4070 only. Packed standard with #90-1/8" blocking ring	F1-47-71-104 thru F1-47-76-104, F1-47-172-104 thru F1-47-176-104 47-71-104 thru 47-76-101 and 47-172-104 thru 47-176-104	13-2562
#47-70-102 Vertical Cams	70 Series mortise cylinders with special cylinder rosette. 9/16" high, threaded cylinder adapter assembly and special cam for use in replacement of Corbin Russwin 1/2"diameter master ring cylinders	F1-47-71-102 thru F1-47-76-102 and 47-71-102 thru 47-76-102	13-2520
#47-70-103 Vertical Cam	70 Series mortise cylinders for Corbin Russwin locks. This cam is similar to the Russwin # 11 cam and Corbin clover cam will work only where the #11 cam is used. It may not operate all Corbin Russwin locks.	F1-47-71-103 thru F1-47-76-103 47-71-103 thru 47-76-103	13-2519
#47-70-106 Cam	70 Series mortise cylinders for Schlage "L" mortise lock	F1-47-71-106 thru F1-47-76-106 47-71-106 thru 47-76-106	13-0939

Keso F1 and Keso cylinder cams can only be used with Keso cylinders. These cams cannot be used with conventional SARGENT mortise cylinders. 170 Series removable core cylinders are only available for SARGENT and Adams Rite locks listed above. The following cams can only be used in removable core: regular cam, -8, -101, -104.

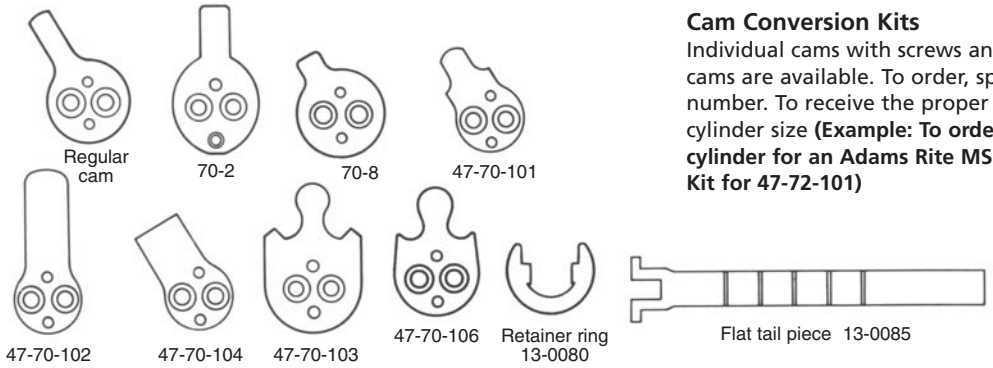

Cam Conversion Kits

Individual cams with screws and complete instructions for changing cams are available. To order, specify cam conversion kit and catalog number. To receive the proper length screws, be sure to specify cylinder size **(Example: To order cam conversion kit for a size 72 cylinder for an Adams Rite MS1850 lock, specify Cam Conversion Kit for 47-72-101)**

Ordering Forms

Orders for the SARGENT Keso F1 Security System are handled on a special priority basis and are closely controlled, not only to expedite shipments, but to protect the security of each installation. These forms are utilized in the ordering procedure:

Signature Authorization Card, Form No. G825
Form G825 is the control card for ordering the SARGENT Keso F1 and Keso Security System. It is to be completed and signed in duplicate. The SARGENT distributor will keep one copy and the second copy will accompany the initial order for the system. When received in New Haven, CT., it will be kept in a locked file for subsequent authenticating purposes. Only those orders bearing one or more of the signatures on this card will be honored.

Authorization For SARGENT Keso F1 Security System, Form No. G826
This form is to be used by the building owner, or his agent, in ordering the SARGENT Keso F1 Security System for additions to an existing system. It is to be completed by the owner or agent and forwarded to the authorized SARGENT Distributor. Completed forms must bear an authorized signature.

SARGENT Keso F1 and Keso Security System Key order, Form No. G827
The key order form is used for ordering additional or duplicate keys for a system. The form is completed by the building owner, or his agent, and an authorized signature must appear on it. The form is forwarded by the building owner to the authorized SARGENT Distributor.

All forms are available only through authorized SARGENT Distributors.

Keso F1 and Keso Security System Field Maintenance, Keso F1 and Keso Service Center and Shipping Schedules

SARGENT
1-800-727-5477
www.sargentlock.com

Field Maintenance of KESO F1 and Keso Security System Cylinders

Proper maintenance of lock cylinders will insure longer life for the SARGENT Keso F1 and Keso Security System and will eliminate potential cylinder malfunctions. Preventive maintenance, performed on a continuing basis, is simple to do and requires no technical knowledge. It is accomplished with a dry film lubricant into the cylinder chamber through the keyway opening. It is not necessary to remove either the lock or cylinder from the door, the keyway is directly exposed in all cases.

While all cylinders should be lubricated once a year, cylinders with a high usage frequency should be lubricated every sixty days. Exterior cylinders which are exposed to dust, dirt and extreme weather conditions should be serviced with dry film lubricant every sixty days.

The proper lubricant is important. It is our recommendation that only a dry film lubricant is used. The use of oil, grease or similar substances should not be used in lock cylinders.

KESO F1 and Keso Security System Service Center

A service center has been established in the factory to process orders in the following three categories:

1. Repair or replace inoperative Keso F1 and Keso Security System cylinders and keys.
2. Supply additional keys for existing key systems.
3. Furnish new cylinders for existing key systems. This service is limited to quantities of twelve cylinders or less.

Service Center Delivery Responsibility

Orders for repair of cylinder in quantities of twelve or less will be shipped within three working days after receipt of order. A delivery date will be available from the factory for cylinders in quantities greater than twelve.

Distributor Responsibility

1. Orders for repair and replacement of inoperative cylinders should be mailed to SARGENT Mfg. Co., 100 SARGENT Drive, New Haven, Connecticut 06511. A day key should accompany any cylinder returned for repair to insure proper diagnosis. A statement regarding the malfunction should also be included. The service center has been established to service owners of KESO Security Systems through authorized distributors only and not on a direct basis with building owners.
2. Key orders should be mailed to SARGENT Mfg. Co. Authorization Form G827 bearing an authorized signature must accompany all orders for additional cylinders.
3. Orders for twelve cylinders or less keyed to an existing system should be mailed to SARGENT Mfg. Co. Authorization Form G826 bearing an authorized signature must accompany all orders for additional cylinders.

Information required to insure prompt and efficient handling of your service orders:

1. Job name
2. Original SARGENT order numbers
3. Key number
4. Registry number (last four digits on key)

Shipping Schedules

For existing installations

Orders for additional keys for existing systems will be filled within 48 hours after receipt of order in quantities of twenty-five keys or less. Orders for more than twenty-five keys will require an additional 24 hours for each increment of fifty keys or less **(Example: 150 keys would require five working days).** Orders for additional new cylinders for existing key systems in quantities of twelve or less will be shipped within fifteen working days after receipt of order.

Keso F1 and Keso Security System How to Order

SARGENT
1-800-727-5477
www.sargentlock.com

Complete Locksets (Mortise, Rim Type and Key-in Knob Cylinders)

How to Order Keso F1 Cylinders for SARGENT Mortise Locks, Exit Devices and Bored

	Keso F1 Cylinders	Keso F1 Removable Core Cylinders	Keso F1 Removable Construction Core Cylinders
How to Order	F1-82-	F1-83-	84-
Example: 8205 LNL 26	F1-82-8205 LNL 26	F183-8205 LNL 26	84-8205 LNL 26
Example 8813xETL 10B LHRB	F1-82-8813xETL 10B LHRB	F1-83-8813xETL 10B LHRB	84-8813xETL 10B LHRB

Note: All Keso F1 products listed are offered with both the F1- Option and the Non F1- Option. To order the non F1- Option, simply leave off the F1- Prefix when ordering.
Note: SARGENT will supply the correct cylinders based on function, door thickness and prefix requested
Note: When ordering cores or cylinders, specify keying requirements

Correct ordering number will consist of:

Complete Locksets: Lockset number with prefix, design, hand and finish. **Example: F1-82-8245 LNL LH 3**

Cylinders Only: Cylinder number, suffix (if any), and finish. **Example: F1-71-2 x 3**

Removable Cores Only: Core number, prefix or suffix (if any), and finish. **Example: F1-5172-3 x 3**

Padlocks: Padlock number, shackle clearance (if other than standard) and finish (if other than standard). **Example: F1-82-856 2-1/2" 26D**

Utility Locks: Lock number and finish. **Example: F1-4152 3**

Locker Locks: Lock number, door thickness and finish. **Example: F1-82-164 1-1/8" x 3**

Prefix Designations

82-	Keso Security Cylinder
F1-82-	Keso Security Cylinder with Front Profile
83-	Keso Security Removable Core Cylinders
F1-83-	Keso Security Removable Core Cylinders with Front Profile
84-	Keso Security Removable Construction Core Cylinder (temporary use only)

SARGENT Manufacturing Company • 100 Sargent Drive • P.O. Box 9725 • New Haven • CT 06536-0915
Phone: 800-727-5477 • Fax: 888-863-5054 • Web site: www.sargentlock.com
SARGENT of Canada • Phone: 905-940-2040 • Fax: 905-940-3242 • Web site: www.sargentcanada.ca

Founded in 1864, SARGENT® is a market leader in locksets, cylinders, door closers, exit devices, electro-mechanical products and access control systems for new construction, renovation and replacement applications. The company's customer base includes commercial construction, institutional and industrial markets.

The ASSA ABLOY Group is the world's leading manufacturer and supplier of locking solutions, dedicated to satisfying end-user needs for security, safety and convenience.

An ASSA ABLOY Group company

ASSA ABLOY