SARGENT®

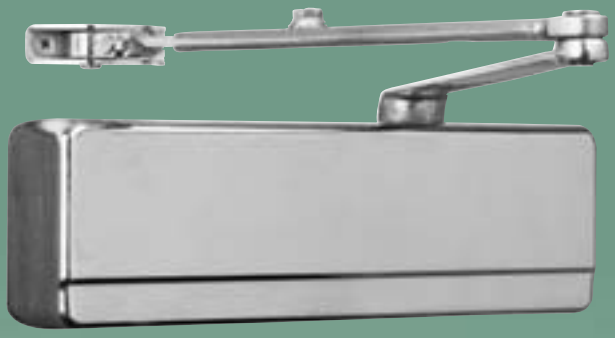

281 Series Powerglide® Door Closer

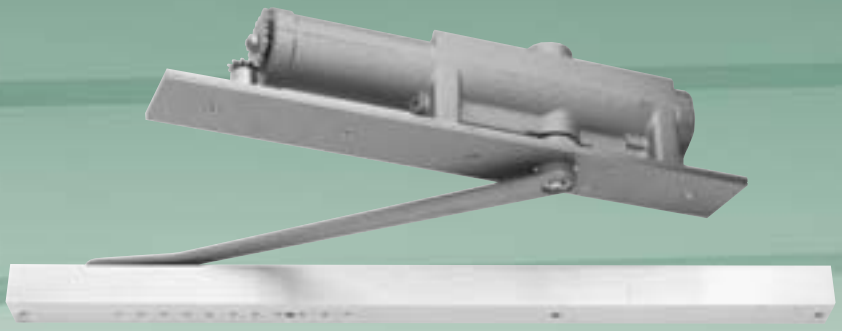

268/278 Series Powerglide® Concealed Door Closer

An ASSA ABLOY Group company

ASSA ABLOY

281/268/278 Series Powerglide® Door Closers

SARGENT
1-800-727-5477
www.sargentlock.com

Table of Contents

How to Select the Proper Closer 1
281 Features 2
268/278 Features 3
281 Standard Application 4
281 Standard/Corner Bracket Application 5
281 Top Jamb Application 6
281 Arms for Top Jamb Application 7
281 Parallel Arm Application 8
281 Arms for Parallel Arm Application 9-10
281 Closers Accessories 11
281 Track Type Applications 12
281 Security Surface Track Type Package 13
268 Overhead Concealed Door Closer 14
278 Overhead Concealed Door Closer with Exposed Arm 15
281 Dimensional Details 16-17
268/178 Dimension Details 18
278/281 ADA Compliance 19
Door Closer and Overhead Stop/Holder Compatibility Chart 20
281 General Information 21
281/268/278 Suggested Architect's Specifications 22
281 Special Conditions, Packaging & How to Order 23

The Powerglide® line of surface and concealed door closers has been engineered to meet the demands of the modern architect and building owner. All series compliment each other, and together offer a complete line for interior and exterior doors. They have quality and flexibility...so important to today's architectural concepts where doors are subject to highly sophisticated climatic control systems and various traffic patterns to equip a building with just the right closer for every door; to maintain a uniform, contemporary look...select and specify SARGENT®.

SARGENT® ***Raising the Bar of Excellence!***

On The Cover

- SARGENT 281 Door Closer with US26 plated O arm and plated metal cover
- SARGENT 268 Concealed Door Closer x EN finish

281/268/278 Series Powerglide® Door Closers How to Select the Proper Closer

SARGENT
1-800-727-5477
www.sargentlock.com

Analyze all door requirements as follows:

1. **Size and Weight of Door**

   The door closers in this catalog are non-sized so that closing force can be adjusted in the field to accommodate various door sizes and weights.

2. **Interior Application**

   Where possible the standard application should be used. This mounting is the most efficient in terms of door closer power and control.

3. **Exterior Application**

   Exterior doors require greater closing forces because of draft and wind conditions. HANDICAPPED SETTINGS SHOULD NOT BE USED. To place the closer out of the weather on exterior doors, the top jamb, corner bracket or parallel arm application should be used.

4. **Degree of Opening**

   The closer should permit the door to open far enough to allow adequate traffic flow. The selection of the proper arm and position on the door is most important.

5. **Function**

   Closers can be equipped with special arms such as hold-open, positive stop or fusible link hold-open where necessary.

6. **Special Condition**

   Templates should be consulted when using special hinges, overhead holders or other specialized hardware.

Standard Application
281 O Arm Shown

281 Push Side Track Type Application

Parallel Arm Application
281 P9 Shown

281 Pull Side Track Type Application

Top Jamb Application
281 O Arm Shown

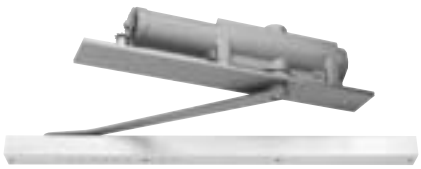

268 Concealed/Track Application

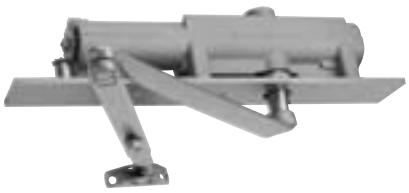

278 Concealed/Exposed Arm Application
278 O Arm Shown

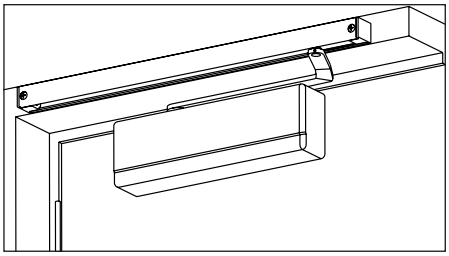

Double Egress Application
281 OD Arm Shown

281 Series Powerglide® Door Closers Features

SARGENT
1-800-727-5477
www.sargentlock.com

Features

- ANSI/BHMA Grade 1 (A156.4)
- Conforms to UL10C and UBC for positive pressure fire test
- Ten Year Warranty
- Versatile mounting applications permit standard, top jamb, parallel and track installations
- UL and cUL listed for use on fire doors
- Adjustable spring power allows 281 closers a size range of 1 through 6. They are adjusted to Size 3 before leaving the factory
- One door closer body for all applications, non-handed
- ADA requirements are met with the 281 model at all applications except track
- Standard pressure relief valves for both opening and closing cycles protect the closer seals and all hardware from excessive force
- Self adhesive heavy duty mounting bracket for easy installation without additional paper template
- Fits both SARGENT 250 and 1250 Series hole pattern for easy retrofit
- High impact non-corrosive plastic covers standard (metal optional utilizing same templating)
- Cover secured by machine screws
- All weather fluid
- Allen wrench controlled spring adjustment mechanism
- Captivated brass valves

Full Complement of Arm Types

- Interchangeable forged steel arms
- Standard and parallel arms
- Push and pull track arms
- Security track
- Security parallel arm
- Heavy duty forged steel arms are finely finished and interchangeable between SARGENT 281 and 1430, 250, 1250 and 350 Series

Heavy Duty Construction

- Heat treated full closer rack and pinion provide control from the full open position
- Heavy duty one piece cast iron body provides superior strength and wear resistance

Separate, All Brass Low Sensitivity Adjusting Valves

- All brass low sensitivity control valves offer separate regulating for door speed, latching, backcheck and optional delayed action
- All valves are controlled by a 1/8" Allen wrench to discourage tampering and are captured to prevent removing valves from the body and damaging door closer
- Adjustable backcheck standard (protecting the door and hardware from damage during the opening cycle
- Adjustable delayed action (optional) permits easy access for physically impaired individuals

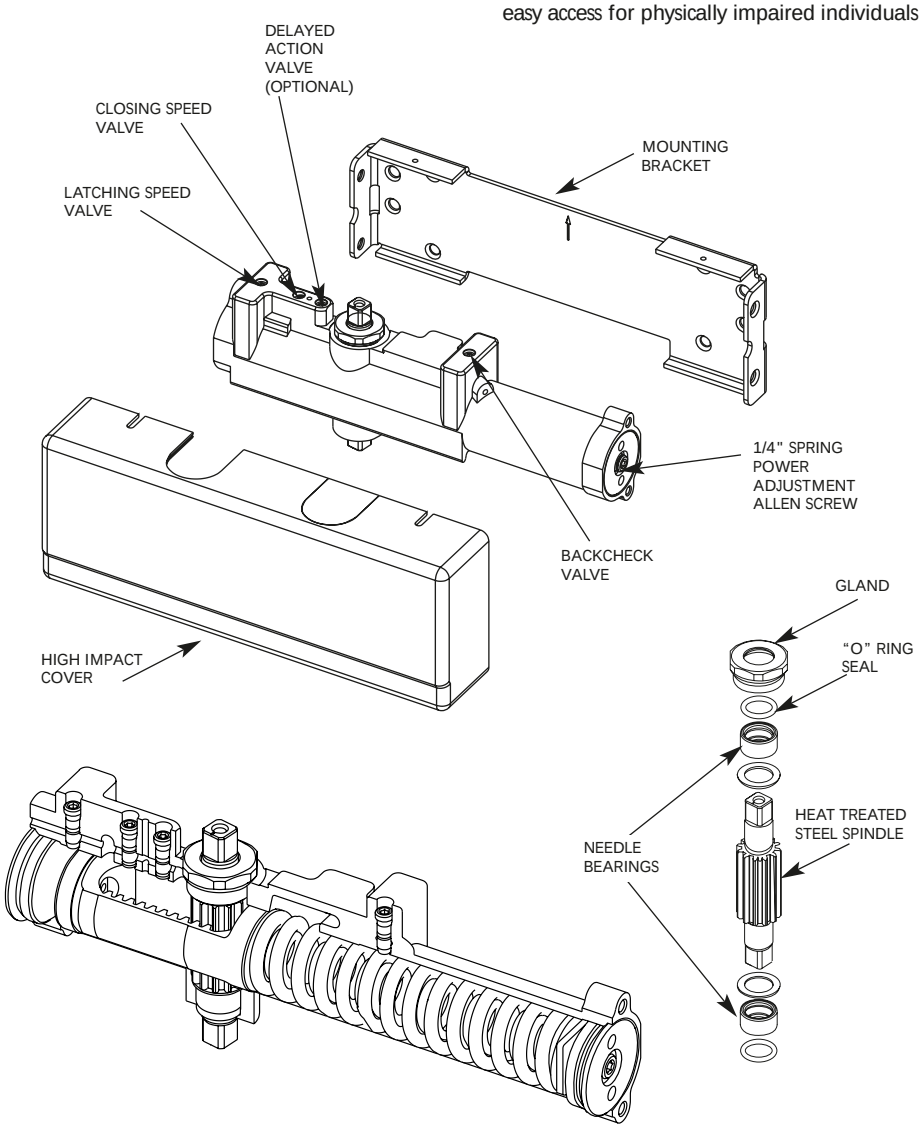

281 Series comply with ADA for reduced open forces of 5 lbs. for interior and 8 lbs. for exterior doors.
See Page 19 for details.

Concealed 268/278 Series Door Closers Features

SARGENT
1-800-727-5477
www.sargentlock.com

268 Overhead Concealed Body and Track Door Closer

- 268 concealed closer and track
- 268 concealed closer security package (CSP) with security arm and track where extra security is needed
- 268 concealed closer security package with door position switch (CSPS and CSPD) for use in high security areas to monitor door position
- Handed
- Construction and features the same as 281
- UL Listed and UL Listed to Canadian safety standards
- Adjustable from Size 2 through 5

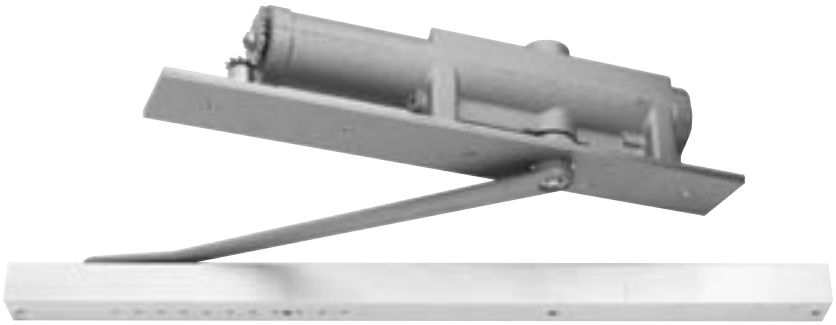

278 Overhead Concealed with Exposed Arm Door Closer

- 278 concealed closer with exposed arm
- 278 sizes 1 through 6: Accommodates applications with ADA requirements
- Construction and features the same as 281
- UL Listed and UL Listed to Canadian safety standards
- Handed

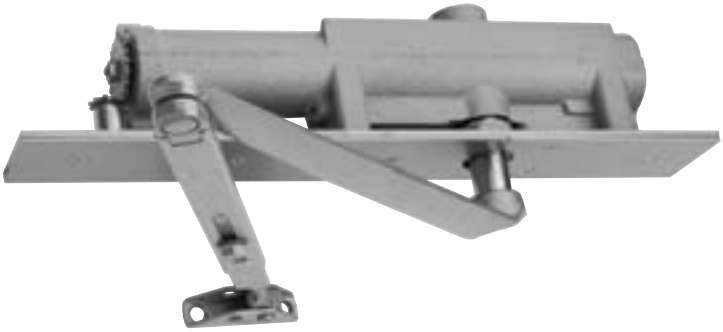

281 Series Powerglide® Door Closers
Standard Application

SARGENT
1-800-727-5477
www.sargentlock.com

This closer mounts on the hinge (pull) side top rail of door. It can be used on interior doors opening in or out and exterior doors opening in. The cover projection normally limits the door opening to a maximum of 160°.

Two closer mounting positions meet all requirements

Standard Mounting Position

- Maximum door opening (O Arm) -120°
- Holding range of holder arm (H Arm) – 90°-105°
- Holding range of fusible link arm (F Arm) – 75°-110°

Alternate Mounting Position (2" nearer hinge)

- If butt, frame and wall conditions permit, closer will allow door to open 180°
- Maximum door opening (O Arm) – 80°
- Holding range of holder arm (H Arm) – 105°-160°
- Holding range of fusible link arm (F Arm) – 110°-135°

Minimum Top Rail Required

- 2-5/8" (67mm) with drop plate
- 4-9/16" (116mm) completely conceals closer body

Maximum Frame Projection

- Maximum projection 7/16" (11mm)

Covers

- High impact non-corrosive covers standard
- Metal Cover optional (handed) utilizes same templating
- Cover projects 2-3/16" (56mm) from door face
- All covers secured by machine screws
- Non-handed

Non Sized-Adjustable

- Interior doors to 5'0" wide
- Exterior doors to 4'0" wide
- Shipped factory preset for 3'0" door
- Factory pre-sized upon request

Backcheck

- Starts at approximately 70° door opening
- Not to be used as a positive stop
- An auxiliary door stop is required
- Pressure relief valve standard

Advanced Backcheck (Optional)

- ABC decreases beginning backcheck position by approximately 15°
- Specify ABC suffix

Delayed Action (Optional)

- From fully open position to approximately 70°
- Available in addition to backcheck
- Pressure relief valve standard

ADA Compliant

Through-bolts and Mortise Nuts

- Available upon request, use suffix TB

All Weather Fluid

- Extreme Temperature Fluid standard

Finishes (Powder Coat)

- EAB, EB, ED, EN, EP (standard) on all exposed surfaces
- Optional architectural plated arms and covers – US3, US4, US9, US10, US10B, 20D, US26, US26D

Special Rust Inhibitor Process (Optional)

- Additional process to add superior rust protection for arms/bracket and body for use in extreme corrosive environments
- SRI for both arm and body
- Specify SRI as suffix

281 Series Powerglide® Door Closers Arms and Accessories Standard/Corner Bracket Application

SARGENT

1-800-727-5477

www.sargentlock.com

25-O Regular Arm (without holder)

- Forged Steel Arm 11-1/4" (286mm) long
- Arm is non-handed
- Permits 120° door opening with standard mounting
- Permits 180° door opening with alternate mounting or corner bracket

Order as 25-O x finish for arm only
25-O Includes: 63-2607–Main arm and link assembly
63-2216–Foot assembly

25-H 90°-180° Holder Arm

- Forged Steel Arm 11-1/4 (286mm) long
- Arm is non-handed
- Hand is changed by inverting the foot assembly
- Friction type holder is easily adjusted by a wrench
- Permits 180° door opening
- Holds open from 80° to 180°

Order as 25-H x finish for arm only
25-H Includes: 63-2229 -Main arm and swivel assembly
61-2303 -Foot assembly

25-F8 Fusible Link Mortise Foot Arm

- Forged Steel Arm 11-1/4" (286mm) long
- Arm is handed and must be same as the door
- Friction type holder is easily adjusted by a wrench
- Permits 140° door opening
- Holds open to 140°
- 160°F Link Standard
- Specify 125° F link only when required

Order as 25-F x hand x finish for arm only
25-F Includes: 63-2240LH -Main arm assembly
63-2241RH -Main arm assembly
61-2273 -Foot assembly

UO Package

- UO affords in-the-field conversion from a regular arm to a parallel arm assembly

Order closer as:
281-UO + finish

25-O8 Mortise Foot Arm

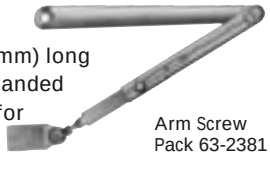

- Forged Steel Arm 11-1/4" (286mm) long
- Arm is non-handed
- Arm is used for standard application
- Permits 120° door opening
- Commonly used with bull nose frames

Order as 25-O8 x finish for arm only
25-O8 Includes: 63-2607 -Main arm and link assembly
63-2273 -Foot assembly

25-H8 Mortise Foot Arm

- Forged Steel Arm 11-1/4" (286mm) long
- Arm is handed and must be same as the door
- Friction type holder is easily adjusted by a wrench
- Permits 180° door opening
- Holds open from 80° to 180°
- 25 R-H8 for right hand and 25 L-H8 for left hand x finish for arm only

63-2229 -Main arm and link assembly
63-2289LH -Foot assembly
63-2290RH -Foot assembly

281-J Cover Plate

- Can be used to improve appearance when narrow door rail permits closer to be viewed through glass panel – specify finish
- Specify 281-J-2 when retrofitting 250/251 Series Door Closers – specify finish

UH Package

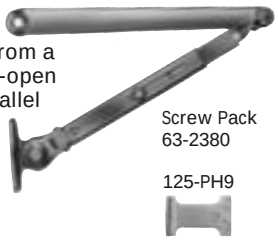

- UH affords in-the-field conversion from a regular hold-open arm to a parallel hold-open arm assembly

Order closer as:
281-UH + finish

25-OLC Low Profile Arm (without holder)

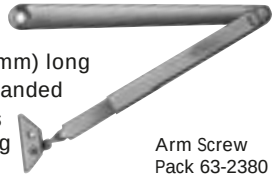

- Forged Steel Arm 11-1/4" (286mm) long
- Arm is non-handed
- Arm requires less mounting space than the regular arm 25-O
- Must be used when the distance between the top of door to ceiling is less than 1-1/4" (32mm)
- Permits 120° door opening with standard mounting

Order as 25-OLC x finish for arm only
25-OLC Includes: 63-2549 -Main arm and link assembly
63-2216 -Foot assembly

25-F 90° Fusible Link Holder Arm With 160°F or 125° F Fusible Link

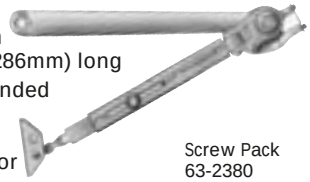

- Forged Steel Arm 11-1/4" (286mm) long
- Arm is handed and must be same as the door
- Friction type holder easily adjusted by a wrench
- Permits 140° door opening
- Holds open from 80° to 140°
- 160° F Link Standard
- Specify 125°F Link only when required

Order as 25-F x hand x finish for arm only
25-RF8 Includes: 63-22240LH -Main arm and link assembly
63-2241RH -Main arm assembly
63-2468 -Foot assembly

281-W Corner Bracket

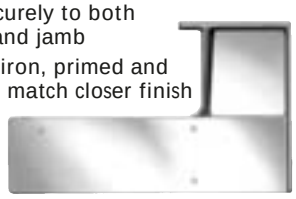

- Fastens securely to both the head and jamb
- Malleable iron, primed and painted to match closer finish
- Bracket is non-handed
- Will accommodate most overhead holders
- Requires 1-1/4" (32mm) minimum wide stop
- Templating is available for blade stop
- Order as 281-W x finish

281 Series Powerglide® Door Closers
Top Jamb Application

SARGENT
1-800-727-5477
www.sargentlock.com

The closer is mounted inverted on top casing above stop face of door. As the door swings, the closer arm swings with the door. For use on interior doors opening either in or out and exterior doors opening out.

Standard Mounting

[For reveals up to 2" (51mm) maximum]

- Maximum door opening with O Arm – 180°
- Hold open range with H Arm – 80°-180°
- Hold open range with F Arm – 80°-130°

Standard Mounting

[For reveals from 2-1/8" (54mm) to 5" (127mm)]

- Max. door opening with OZ Arm – 140°
- Hold open range with HZ Arm – 80°- 140°
- Hold open range with FZ Arm – 80°-130°

Standard Mounting

[For reveals from 5-1/8" (130mm) to 8" (230mm)]

- Max. door opening with OZA Arm – 140°
- Hold open range with HZA Arm – 80°-130°
- Hold open range with FZA Arm – 80°- 130°

Minimum Frame Face Required

- 1-3/4" (44mm) for both single and double rabbeted frames

Minimum Door Top Rail Required to Mount Closer Foot

- 1-7/8" (48mm) minimum
- Rail height used will vary depending on type and make of auxiliary holder

Covers

- High impact non-corrosive covers
- Metal Cover optional (handed) utilizes same templating
- Cover projects 2-3/16" (56mm) from door face
- All covers secured by machine screws
- Non-handed

Non Sized-Adjustable

- Interior doors to 5'0" wide
- Exterior doors to 4'0" wide
- Shipped factory preset for 3'0" door
- Factory pre-sized upon request

Backcheck

- Starts at approximately 70° door opening
- Not to be used as a positive stop
- An auxiliary door stop is required
- Pressure relief valve standard

281-B Mounting Plate

- Permits mounting closers for special applications when overhead auxiliary door holders are used, or in a low ceiling condition. Specify conditions when ordering
- Wrought Steel, painted to match finish of closer
- Plates are non-handed
- Plate mounting screws included
- Order as 281-B x finish

Delayed Action (Optional)

- From fully open position to approximately 70°
- Available in addition to backcheck
- Pressure relief valve standard

Advanced Backcheck (Optional)

- ABC decreases beginning backcheck position by approximately 15°
- Specify ABC suffix

Through-bolts and Mortise Nuts

- Available upon request – specify x 4 TB suffix

All Weather Fluid

- Extreme Temperature Fluid is standard

Finishes (Powder Coated)

- EAB, EB, ED, EN, EP (standard) on all exposed surfaces
- Optional architectural plated arms and covers – US3, US4, US9, US10, US10B, 20D, US26, US26D

Special Rust Inhibitor Process (Optional)

- Additional process to add superior rust protection for arms/bracket and body for use in extreme corrosive environments.
- SRI for both arm and body.
- Specify SRI as suffix.

281 Series Powerglide® Door Closers Arms for Top Jamb Application

SARGENT
1-800-727-5477
www.sargentlock.com

25-O Regular Arm

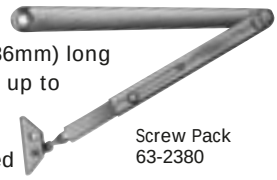

- Forged Steel Arm 11-1/4" (286mm) long
- For reveals up to 2" (51mm)
- Arm is non-handed
- Permits 180° door opening

Screw Pack 63-2380

Order as 25-O x finish for arm only
25-O Includes: 63-2607 -Main arm and link assembly
63-2216 -Foot assembly

25-OZ Regular Arm (for Deep Reveal)

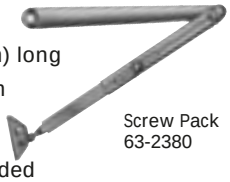

- Forged Steel Arm 11-1/4" (286mm) long
- For reveals from 2-1/8" (54mm) to 5" (127mm)
- Arm is non-handed
- Permits 140° door opening

Screw Pack 63-2380

Order as 25-OZ x finish for arm only
25-OZ Includes: 63-2607 -Main arm and link assembly
63-2217 -Foot assembly

25-OZA Regular Arm (for Deep Reveal)

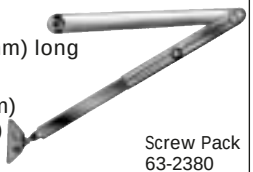

- Forged Steel Arm 11-1/4" (286mm) long
- For reveals 5-1/8" (130mm) to 8" (203mm)
- Arm is non-handed
- Permits 140° door opening

Screw Pack 63-2380

Order as 25-OZA x finish for arm only
25-OZA Includes: 63-2607 -Main arm and link assembly
63-2218 -Foot assembly

25-H Holder Arm

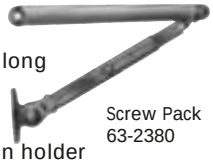

- Forged Steel Arm 11-1/4" (286mm) long
- For reveals up to 2" (51mm)
- Adjustable friction holder
- Arm is non-handed
- Permits 180° door opening

Screw Pack 63-2380

Order as 25-H x finish for arm only
25-H Includes: 63-2229 -Main arm and link assembly
61-2303 -Foot assembly

25-HZ Holder Arm (for Deep Reveal)

- Forged Steel Arm 11-1/4" (286mm) long
- For reveals from 2-1/8" (54mm) to 5" (127mm)
- Adjustable friction holder
- Arm is non-handed
- Permits 140° door opening

Screw Pack 63-2380

Order as 25-HZ x finish for arm only
25-HZ Includes: 63-2230 -Main arm and link assembly
61-2303 -Foot assembly

25-HZA Holder Arm (for Deep Reveal)

- Forged Steel Arm 11-1/4" (286mm) long
- For reveals 5-1/8" (130mm) to 8" (203mm)
- Adjustable friction holder
- Arm is non-handed
- Permits 140° door opening

Screw Pack 63-2380

Order as 25-HZA x finish for arm only
25-HZA Includes: 63-2231 -Main arm and link assembly
61-2303 -Foot assembly

25-F 180° - Holder Arm (Inverted)

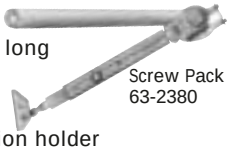

- Forged Steel Arm 11-1/4" (286mm) long
- For reveals up to 2" (51mm)
- Adjustable friction holder
- Arm is handed same as the door
- Permits 140° door opening
- 160° F link standard
- Specify 125° F link only when required

Screw Pack 63-2380

Order as 25-F x hand x finish for arm only
25-F Includes: 63-2240LH -Main arm and link assembly
63-2241RH -Main arm and link assembly
63-2468 -Foot assembly

25-FZ Fusible Link Holder Arm (Inverted for Deep Reveal) with 160° or 125° Fusible Link

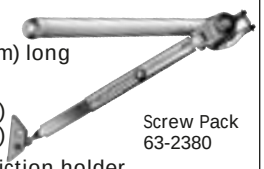

- Forged Steel Arm 11-1/4" (286mm) long
- For reveals 2-1/8" (54mm) to 5" (127mm)
- Adjustable friction holder
- Arm is handed same as the door
- Permits 140° door opening
- 160° F link standard
- Specify 125° F link only when required

Screw Pack 63-2380

Order as 25-FZ x hand x finish for arm only
25-FZ Includes: 63-2240LH -Main arm and link assembly
63-2241RH -Main arm and link assembly
63-2217 -Foot assembly

25-FZA Fusible Link Holder Arm (Inverted for Deep Reveal) with 160° or 125° Fusible Link

- Forged Steel Arm 11-1/4" (286mm) long
- For reveals 5-1/8" (130mm) to 8" (203mm)
- Adjustable friction holder
- Arm is handed same as the door
- Permits 140° door opening
- 160° F link standard
- Specify 125° F link only when required

Screw Pack 63-2380

Order as 25-FZA x hand x finish for arm only
25-FZA Includes: 63-2240LH -Main arm and link assembly
63-2241RH -Main arm and link assembly
63-2218 -Foot assembly

281 Series Powerglide® Door Closers
Parallel Arm Application

SARGENT
1-800-727-5477
www.sargentlock.com

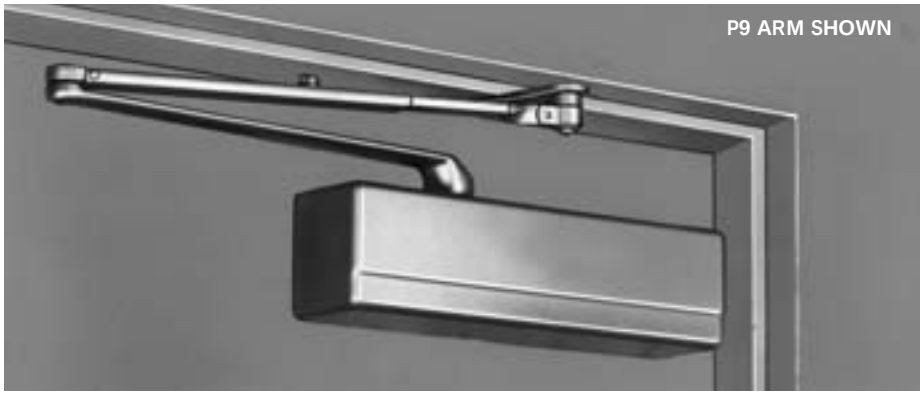

The closer is mounted on the top rail on the stop side of the door. As the door opens, the closer swings with the door and gives full headroom in the door opening.

Minimum Top Rail Required

- 6-7/8" is required to completely conceal the closer body
- With drop bracket – 3" (76mm)
- Rail height will vary depending on type and make of auxiliary holder
- Add 1/2" to requirements when using fusible link arm
- Dimension measured from the stop
- If door or window trim conflicts, 281 B inverted mounting plate may be required (See template A7242)

Minimum Frame Stop Required For Foot Bracket

- 1-1/16" (27mm) minimum stop required except for P3 foot
- P3 foot requires 1-3/16" (30mm) stop

Minimum Mounting Space Required Between Doors

- 25-P10 Arm = 4-3/4" (121mm)
- 25-PS and PSH = 5-3/4" (146mm)
- 25-P9 = 4-5/8" (118mm)
- 25-PH9 = 5-3/8" (137mm)

Covers

- Non-handed, high impact non-corrosive cover standard
- Metal covers optional (handed) utilizing same templating
- Cover projects 2-3/16" (56mm) from door face
- All covers secured by machine screws

Non Sized-Adjustable

- Interior doors to 5'0" wide
- Exterior doors to 5'0" wide
- Shipped factory preset for 3'0" door
- Factory pre-sized upon request

Two Closer Mounting Positions Meet All Requirements

Standard Mounting Position

- Maximum door opening – 120°
- Holding range of holder arm (PH9 Arm) – 75°-110°
- Holding range of fusible link arm (PF9 Arm) – 75°-110°

Alternate Mounting Position (3" nearer hinge)

- Maximum door opening – 180°
- Holding range of holder arm (PH9 Arm) – 110°-180°
- Holder range of fusible link arm (PF9 Arm) – 110°-180°

Backcheck

- Starts at approximately 70° door opening
- Not to be used as a positive stop
- An auxiliary door stop is required
- Pressure relief valve standard

All Weather Fluid

- Extreme Temperature Fluid is standard

Finishes (Powder Coated)

- EAB, EB, ED, EN, EP (Standard) on all exposed surfaces
- Optional architectural Plated Arms and covers – US3, US4, US9, US10, US10B, 20D, US26, US26D

OPTIONS

Advanced Backcheck (Optional)

- ABC decreases beginning backcheck position by approximately 15°
- Specify ABC suffix

Delayed Action (Optional)

- From fully open position to approximately 70°
- Available in addition to backcheck
- Pressure relief valve standard
- Specify DA suffix

Through-bolts and Mortise Nuts

Available on request – Specify x 4 TB

SSP Security Package (Optional)

- Security arm (25-SP10) factory assembled
- Metal cover (handed) secured by machine screws
- All exposed screws are security type

Special Rust Inhibitor Process (Optional)

- SRI for both arm and body
- Specify SRI suffix
- Additional process to add superior rust protection for arms/bracket and body for use in extreme corrosive environments. SRI for both arm and body. Specify SRI as suffix.

281 Series Powerglide® Door Closers
Arms for Parallel Arm Application

SARGENT
1-800-727-5477
www.sargentlock.com

25-P9 Regular Arm

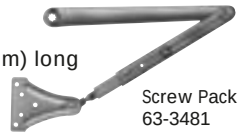

- Forged Steel Arm 11-1/4" (286mm) long
- Arm is non-handed

Order as 25-P9 x finish for arm only
25-P9 Includes: 63-2607 -Main arm and link assembly
63-2271 -Foot assembly

25-PH10 Holder Arm (Heavy Duty)

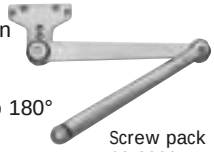

- Equipped with adjustable friction holder
- Adjustable hold open from 75° to 180°
- Forged steel arm 11-1/4" (286mm) long
- Easily installed
- Arm is handed, same as door

Order as 25-PH10 x finish for complete arm assembly
25-PH10 Includes:
63-0641 -Main arm
63-3839 -Arm and bracket assembly (L.H.)
63-3840 -Arm and bracket assembly (R.H.)

25-P4 Transom Flush Arm

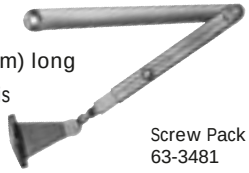

- Forged Steel Arm 11-1/4" (286mm) long
- Foot bracket is attached to frame or transom face
- For use where stop or soffit is too narrow for the standard 25-P9
- Permits 120° opening with standard mounting
- Permits 180° opening with alternate mounting
- Arm is non-handed

Order as 25-P4 x finish for arm only
25-P4 Includes: 63-2607 -Main arm and link assembly
63-2295 -Foot assembly

25-PH4 Flush Transom Holder Arm

- Forged Steel Arm 11-1/4" (286mm) long
- Equipped with an adjustable friction holder
- Holds open from 75° to 180°
- Easily adjusted by wrench
- Arm is non-handed
- Use on frames where stop or soffit is too narrow to mount the standard hold open foot bracket

Order as 25-PH4 x finish for arm only 25-PH4 Includes:
63-2229 -Main arm and link assembly
61-2303 -Foot assembly
64-0050 -Foot bracket

25-P3 Special Arm (without holder)

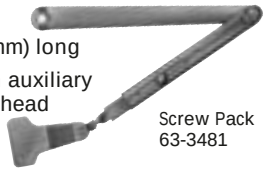

- Forged Steel Arm 11-1/4" (286mm) long
- For use with auxiliary surface overhead stops and holders
- Foot bracket is offset 1" more than P-9, allowing door closer to be lowered on door face
- Opening swing limited to degree permitted by the overhead stop and holder
- Submit complete details for template instructions
- Arm is non-handed

Order as 25-P3 x finish for arm only 25-P3 Includes:
63-2607 -Main arm and link assembly
63-2270 -Foot assembly

25-P4A Transom Flush Arm

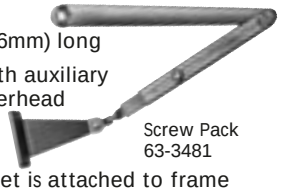

- Forged Steel Arm 11-1/4" (286mm) long
- For use with auxiliary surface overhead stops and holders
- Foot bracket is attached to frame or transom face
- Foot bracket is offset an additional 3/4" allowing for clearance for use of overhead stop and holder
- Opening swing limited to degree permitted by the overhead stop and holder
- Arm is non-handed

Order as 25-P4A x finish for arm only
25-P4A Includes: 63-2607 -Main arm and link assembly
63-2272 -Foot assembly

UO Package

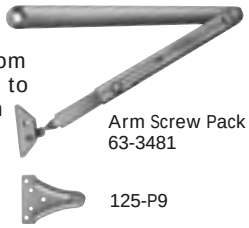

- UO affords in-the-field conversion from a regular arm to a parallel arm assembly

Order closer as:
281-UO + finish

25-P3A Special Arm (without holder)

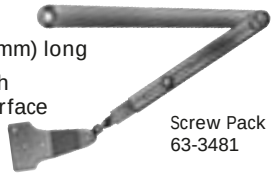

- Forged Steel Arm 11-1/4" (286mm) long
- For use with auxiliary surface overhead stops and holders
- Foot bracket is offset an additional 3/4" allowing door closer to be lowered beyond that permitted by the 25-P3 arm
- Opening swing limited to degree permitted by the overhead stop and holder
- Submit complete details for template instructions
- Arm is non-handed

Order as 25-P3A x finish for arm only 25-P3 Includes:
63-2607 -Main arm and link assembly
63-2274 -Foot assembly

25-PF9 90°-180° Fusible Link Holder Arm with 160°F or 125°F Fusible Link

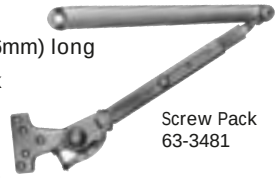

- Forged Steel Arm 11-1/4" (286mm) long
- Fusible link melts and releases hold mechanism allowing door to close
- 160°F fusible link standard, 125°F link optional
- Equipped with adjustable friction holder
- Holds open from 75° to 180° door opening
- Easily adjusted by wrench
- Arm is handed same as door closer

Order as 25-PF9 x hand x fusible link degree x finish for arm only 25-PF9 Includes:
63-2229 -Main arm and link assembly
63-2245LH -Foot assembly
63-2246RH -Foot assembly

UH Package

- UH affords in-the-field conversion from a regular hold-open arm to a parallel hold-open arm assembly

Order closer as:
281-UH + finish

281 Series Powerglide® Door Closers
Arms for Parallel Arm Application

SARGENT
1-800-727-5477
www.sargentlock.com

25-PSH Heavy Duty Holder Stop Arm

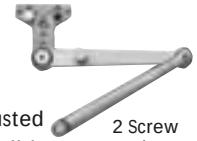

- Provides holder and stop features
- Handed arm is field-reversible
- Easily installed/adjusted
- For flush frame conditions, mounts on 125-VF bracket. Bracket must be ordered separately
- For narrow frame conditions, arm mounts on 125-V bracket. Bracket must be ordered separately
- Permits 85° to 110° door opening

2 Screw Packs Required
63-3481
63-2392

Order as 25-PSH x finish for arm only 25-PSH Includes:
63-0641 -Main arm
63-3833 -Arm and bracket assembly

25-CPS Heavy Duty Compression Stop Arm

- Forged Steel Arm 11-1/4" (286mm) long
- Provides built in compression stop from 85° to 105°
- Permits 105° opening maximum
- Easily installed
- Handed arm is field-reversible
- 125-VF bracket is used for flush frame conditions. Bracket is ordered separately
- 125-V bracket is used for narrow stop conditions. Bracket is ordered separately
- Dead stop within 3°

2 Screw Packs Required
63-3481
63-2392

Order as 25-CPS x finish for arm only 25-CPS Includes:
63-0641 -Main arm
63-3830 -Arm and bracket assembly
63-0516 -Bumper holder
63-3493 -Bumper

25-SP10 Heavy Duty Security Arm

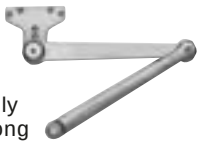

- Same as 25-P10, except factory assembled at arm joint (elbow) to prevent disassembly in SSP package along with metal cover

3497 Carry Open Bar

For use with door coordinator. Aids in opening active door when inactive door is opened and protects astragal and overlapping strike. Cast bronze. Packed with wear plate, wood and machine screws. Finishes: 10, 26D

25-PH9 90° - 180° Holder Arm

- Forged Steel Arm 11-1/4" (286mm) long
- Equipped with an adjustable friction holder
- Holds open from 75° to 180°
- Easily adjusted by wrench
- Arm is non-handed

Screw Pack
63-3481

Order as 25-PH9 x finish for arm only 25-PH9 Includes:
63-2229 -Main arm and link assembly
61-2303 -Foot assembly
-Foot bracket (125 PH9)

25-P10 Heavy Duty Arm

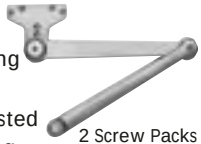

- Forged Steel Arm 11-1/4" (286mm) long
- Non-Handed
- Easily installed/adjusted
- Permits 120° opening at standard mounting
- Permits 180° opening at alternate mounting

2 Screw Packs Required
63-3481
63-2392

Order as 25-P10 x finish for arm only
25-P10 Includes: 63-0641 -Main arm
63-3727 -Arm and bracket assembly

25-CPSH Heavy Duty Compression Holder Arm

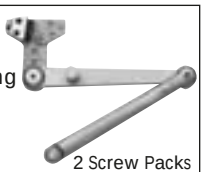

- Forged Steel Arm 11-1/4" (286mm) long
- Handed arm is field-reversible
- Provides built in compression stop and holder mechanism from 85° to 105°
- Easily installed/adjusted
- Permits 105° opening maximum
- 125-VF bracket is used for flush frame conditions. Bracket is ordered separately
- 125-V bracket is used for narrow stop conditions. Bracket is ordered separately
- Dead stop within 3°

2 Screw Packs Required
63-3481
63-2392

Order as 25-CPSH x finish for arm only 25-CPSH
Includes: 63-0641 -Main arm
63-3836 -Arm and bracket assembly
63-0516 -Bumper holder
63-3493 -Bumper

25-PS Heavy Duty Stop Arm

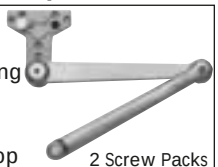

- Forged Steel Arm 11-1/4" (286mm) long
- Handed arm is field-reversible
- Provides built in stop from 85° to 110°
- Permits 110° opening maximum
- Easily installed
- 125-VF bracket is used for flush frame conditions. Bracket is ordered separately
- 125-V bracket is used for narrow stop conditions. Bracket is ordered separately
- Permits 85° to 110° door opening

2 Screw Packs Required
63-3481
63-2392

Order as 25-PS x finish for arm only 25-PS Includes:
63-0641 -Main arm
63-3837 -Arm and bracket assembly

25-PF9 90°-180° Fusible Link Holder Arm with 160°F or 125°F Fusible Link

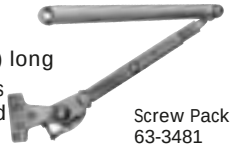

- Forged Steel Arm 11-1/4" (286mm) long
- Fusible link melts and releases hold mechanism allowing door to close
- 160°F fusible link standard, 125°F link optional
- Equipped with adjustable friction holder
- Holds open from 75° to 180° door opening
- Easily adjusted by wrench
- Arm is handed same as door closer

Screw Pack
63-3481

Order as 25-PF9 x hand x fusible link degree x finish for arm only 25-PF9 Includes:
63-2229 -Main arm and link assembly
63-2245LH -Foot assembly
63-2246RH -Foot assembly

3487/3488 Door Coordinators

- Prevents active door from closing before inactive door
- Meets Federal Specification FF-H-106a Type 836. Cast bronze with rubber rollers
- UL Labeled when used with Fire Exit Hardware
- 3487 (6-3/4" length; 171mm) for pairs of doors equipped with outside astragal
- 3488 (8-5/8" length; 219 mm) for pairs of doors equipped with inside and outside astragals. Both include bracket and wear plate
- Packed with wood and machine screws
- Finishes: 10, 26D

281 Series Powerglide® Door Closers Accessories

SARGENT
1-800-727-5477
www.sargentlock.com

125-P3 Arm Conversion Unit

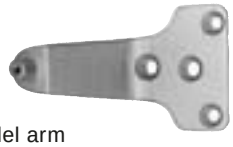

- For use with overhead door holders
- Converts standard arm to 25-P3 parallel arm
- Bracket is offset 1" more than P-9 arm, allowing door closer to be lowered

125-P4A Arm Conversion Unit

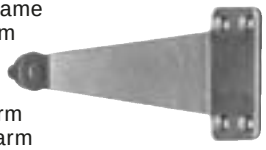

- For flush frame and transom conditions
- Converts standard arm to 25-P4A arm
- Used with auxiliary overhead stops & holders

125-V/125-VF Brackets

- For use with 25-P10, CPS/CPSH and 25-PS/PSH arms
- Use 125-V for narrow stop and frame conditions
- Use 125-VF for flush door and frame conditions

281 J Cover Plate

- Can be used to improve appearance when narrow door rail permits closer to be viewed through glass panel
- Use 281-J-2 plate when retrofitting 250/251 Series Door Closer

125-P3A Arm Conversion Unit

- For use with overhead door holders
- Same as 125-P3 except provides a 1-3/4" offset
- Converts standard arm to 25-P3A parallel arm

125-PH9 Parallel Arm Foot

- Converts standard hold open (25-H) arm to 25-PH9 parallel hold open arm

Spacer 63-0191

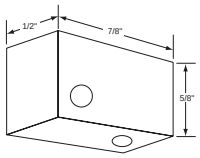

- Included with PS, PSH, PH10, P-10 CPS and CPSH arm as standard for use with 5th screw

581-2 Blade Stop Spacer Kit

- For frames with 1/2" blade stops
- For use with P10, PH10, PS, PSH, CPS and CPSH arms
- 125-V bracket included
- Packed with 1-1/4" long screws

To order blade stop only use P/N 64-0157

125-P4 Conversion Unit

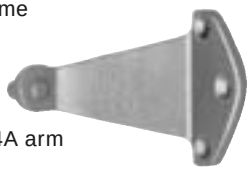

- For flush frame and transom conditions
- Converts standard arm to 25-P4A arm

281-D Drop Plate

- Permits mounting 281 Series Closers having parallel arm applications on doors with less than 5-13/16" (148mm) top rails
- Requires 3" (76mm) minimum top rail
- For closers used with overhead stops and holders. Top rail requirements will vary depending upon type and make of holder
- Steel primed and painted to match closer finishes
- Non-handed – Plate mounting screws included
- Order as 281-D x finish

25-OD Double Egress Arm

- Forged steel arm
- Handed
- Special frame profile required
- For use with reveals from 3" to 4"
- Available with Holder option (HD) and bumper option (B)

Order as 25-OD x finish for track and arm assembly
25-OD Includes:
63-2447 -Track Assembly
63-3656 -LH Arm
63-3657 -RH Arm

581-1 Blade Stop Spacer Kit

- For frames with 1/2" blade stops
- For use with P9, PH9 and PF9 arms only
- Packed with 1-1/4" long screws

Retrofit Kits #586-1,2,3

The 586 kit allows easy upgrade from existing 250/1250 Series to the 281 Series. Kit includes closer, full cover, fasteners and closer body mounting bracket.

586-1 Replaces 250DA and 1250 DA Series
586-2 Replaces 250 with advanced backcheck
586-3 Replaces 250, 251, 1250 and 1251 Series

281 Series Powerglide® Door Closers
Track Type Applications

SARGENT
1-800-727-5477
www.sargentlock.com

Pull Side Mounting (Hinge Side)

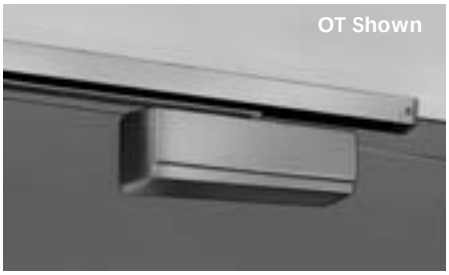

Push Side Mounting (Stop Side)

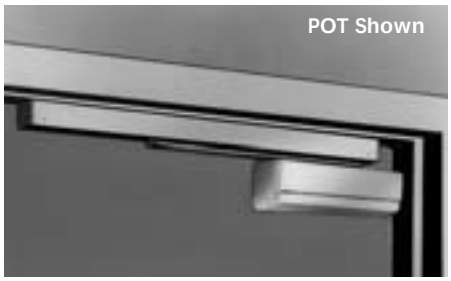

The closer is mounted on the door. As the door opens, the closer swings with the door. For use on interior doors opening in or out. This application affords a variable hold-open feature which is available on order.

- Track mounts on frame face "OT"
- Minimum top rail required without mounting plate = 2-3/8" (60mm)
- Mounting plates cannot be used for this application

Maximum Door Opening

- 160° with standard track
- 120° with optional bumper track
- 180° with ideal conditions for standard track

Pull Side Double Egress "OD"

- 160° maximum door opening
- 120° opening with bumper option
- Range of hold open 85°-120°
- Used with reveals 3" to 4" (76mm-102mm)
- Non standard frame required

Hold Open Range

- 85° to 120°

- Track mounts on frame stop "POT"
- Minimum top rail required without drop plate = 4-3/4" (121mm)
- With 281D Drop Plate 3" (76mm)

Minimum Stop Required

- 1-9/16" (40mm) wide

Maximum Door Opening

- 100° with standard track
- 95° with optional bumper track

Hold Open Range

- 85° to 95°

Arm & Track Description/Options

25-OT	Pull
25-OTB	Pull with Bumper
25-HT	Pull with Holder
25-HTB	Pull with Holder and Bumper
25-OD	Pull Double egress (Handed) (Non-standard frame required)
25-ODB	Pull Double egress with Bumper (Handed) (Non-standard frame required)
25-HD	Pull Double egress with Holder (Handed) (Non-standard frame required)
25-HDB	Pull Double egress with Holder and Bumper (Handed) (Non-standard frame required)
25-POT	Push
25-POTB	Push with Bumper
25-PHT	Push with Holder
25-PHTB	Push with Holder and Bumper

NOTE: Two mounting applications are available

Covers

- High impact non-corrosive covers standard
- Metal covers optional (handed) utilizing same templating
- Cover projects 2-3/16" (56mm) from door face
- All covers secured by machine screws

Track

- Extruded aluminum track
- End caps finished to match track

Arm

- Forged steel
- Bearing roller

Bumper (Optional)

- Mounts in track to assist backcheck
- Not designed to be used as a stop
- Auxiliary stop is required
- Available for both regular or hold open tracks

Holder (Optional)

- Mounts within the track (adjustable)

Non Sized-Adjustable

- Interior doors to 5'0" wide
- Shipped factory preset for 3'0" door
- Factory pre-sized upon request

Backcheck

- Starts at approximately 70° door opening
- Not to be used as a positive stop
- An auxiliary door stop is required
- Pressure relief valve standard

Delayed Action (Optional)

- Fully open position to approximately 70°
- Available in addition to backcheck
- Pressure relief valve standard

Through-bolts and Mortise Nuts

- Available on request – specify TB suffix

Finishes (Powder Coat)

- EAB, EB, ED, EN, EP (standard for all exposed surfaces)

Special Rust Inhibitor Process (Optional)

- Additional process to add superior rust protection for arms/bracket and body for use in extreme corrosive environments. SRI for both arm and body. Specify SRI as suffix.

281 Series Powerglide® Door Closers
Security Surface Track Type Package

SARGENT
1-800-727-5477
www.sargentlock.com

Pull Side Mounting (Hinge Side) SSPT

- Track mounts on frame face
- Maximum door opening – 160°
- Minimum frame face 2-3/8"

Backcheck

- Backcheck is designed to start at approximately 70° door opening. The backcheck feature is not to be used as a positive stop. A door stop must be used

Delayed Action

- Delayed action feature is available

Handed

- Metal cover only
- Cover secured by two machine screws

Features of Surface Security Package

- Special security main arm with screwed in roller
- Security track with adapter bar mounted on pull side
- Tamper proof security screws
- Metal cover with security screws (handed)
- Track design ejects foreign objects from within track

Push Side Mounting (Stop Side) PSSPT

- Track mounts on frame stop
- Maximum door opening – 100°
- Minimum stop required 1-11/16"

Backcheck

- Backcheck is designed to start at approximately 70° door opening. The backcheck feature is not to be used as a positive stop. A door stop must be used

Delayed Action

- Delayed action feature is available

Handed

- Metal cover only
- Cover secured by two machine screws

Features of Surface Security Package

- Special security main arm with screwed in roller
- Security track mounts on stop for push side
- Tamper proof security screws
- Metal cover with security screws (handed)
- Track design ejects foreign objects from within track
- Security track mounts on stop for push side

NOTE: Two mounting applications are available

268 Series Powerglide® Door Closers
Overhead Concealed Door Closer

SARGENT
1-800-727-5477
www.sargentlock.com

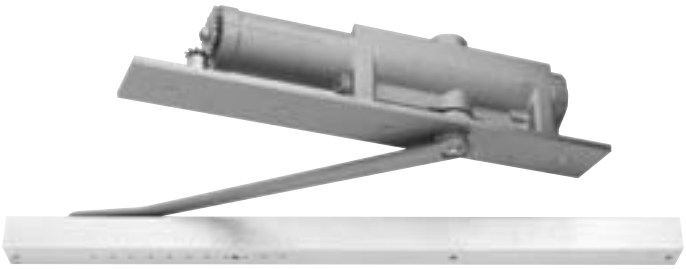

Fully Concealed

- Closer body concealed in frame head section
- Arm & track fully concealed in door

Minimum Frame

- 4" (102mm) Face
- 4" (102mm) Jamb depth
- Removable stop by frame supplied when required
- Consult the factory for special narrow frame sections or frames with 2" (51mm) faces

Minimum Door Thickness

- 1-3/4" (44mm) min. door thickness
- Hung with hinges, center hung or offset pivots furnished by others

Metal Faceplate

- Closer faceplate furnished standard

Arm/Track Assembly

- Forged Steel Arm with ball bearing roller 11-1/4" long
- Aluminum track

Handed

- Order the same hand as the door

Arm Options

- O Standard
- H Hold Open
- OB Standard w/bumper to assist backcheck
- HB Holder w/bumper to assist backcheck

Degree of door opening 180°. Hold open range 85-110 use of bumper will slightly reduce degree of opening

Non-Sized Adjustable

- Adjustable 2 through 5
- Shipped factory preset for 3'0" door

Backcheck

- Starts at approx. 70° door opening
- Not to be used as a positive stop

Auxiliary Door Stop Required

- Closer arm and backcheck feature are not to be used as a door stop
- Auxiliary door stop must be used

UL Listed

- Non hold open arm assemblies are Listed by Underwriters Laboratories for self-closing doors

All Weather Fluid

- Extreme temperature fluid standard

Finishes (Powder Coated)

- EAB, EB, ED, EN and EP (Standard for all exposed surfaces)

Special Rust Inhibitor Paint (Optional)

- Additional process to add superior rust protection for arms/bracket and body for use in corrosive environment. SRI for both arm and body. Specify SRI as suffix

Optional Security Packages Available

Package CSP

- Security track with (4) security mounting screws
- Ejects foreign objects from within track
- Special security forged steel arm with threaded ball bearing roller
- Tamper proof lobe security screws
- Heavy Duty Steel Top Plate conceals adjusting screws from tampering
- Requires different templating than the standard 268 closer
- Removable stop required by the frame supplier for doors less than 2-1/4" thick

Package CSPD

- Double Pole Double Throw Door Position Switch
- Switch is field adjustable
- Contacts are rated at 125/250 VAC 10.1 amps resistive load
- 2 each: 3 wire color coded 12" harnesses with 18 AWG wires
- Interfaces with door monitoring and alarm systems
- Security track with (4) security mounting screws
- Ejects foreign objects from within track
- Special security forged steel arm with threaded ball bearing roller
- Tamper proof lobe security screws
- Heavy Duty Steel Top Plate conceals adjusting screws from tampering
- Removable stop required by frame supplier for doors less than 2-1/4" thick

Package CSPS

- Single Pole Double Throw Door Position Switch
- Switch is field adjustable
- Contacts are rated at 125/250 VAC 10.1 amps resistive load
- 3 wire color coded 12" harness with 18 AWG wires
- Interfaces with door monitoring or alarm systems
- Security track with (4) security mounting screws
- Ejects foreign objects from within track
- Special security forged steel arm with threaded ball bearing roller
- Heavy Duty Steel Top Plate conceals adjusting screws from tampering
- Removable stop required by frame supplier for doors less than 2-1/4" thick

278 Series Powerglide® Door Closers Overhead Concealed Door Closer with Exposed Arm

SARGENT
1-800-727-5477
www.sargentlock.com

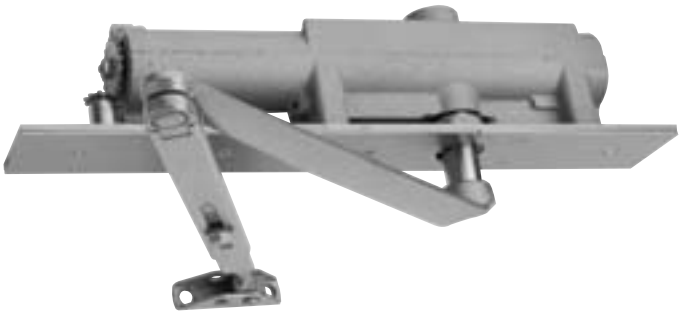

Special Rust Inhibitor Process (Optional)

- SRI for arm and body
- Specify SRI suffix

Auxiliary Door Stop Required

- Closer arm and backcheck feature are not to be used as a door stop
- Auxiliary door stop must be used

Semi Concealed

- Closer body concealed in frame head section
- Arm surface mounts to the push side door face

Minimum Frame

- 4" (102mm) Face
- 4" (102mm) Jamb depth
- Removable stop by frame supplier required
- Consult the factory for special narrow frame sections or frame with 2" (51mm) faces

Metal Faceplate

- Closer faceplate furnished standard

Arms

- Regular–"O", Hold Open–"H", Fusible Link– "F"
- Forged Steel Arms 11-1/4" (286mm)
- Arms are non-handed
- For max. door opening–see chart below
- Order as 25-O, H or F x finish for arm only

Handed

- Order the same hand as the door

Non-Sized Adjustable

- Interior doors up to 5'0" wide
- Exterior doors up to 4'0" wide
- Shipped factory preset for 3'0" door
- Factory pre-sized upon request

Backcheck

- Starts at approximately 70° door opening
- Not to be used as a positive stop

ADA Compliant

UL Listed

- Non hold open arm assemblies are Listed by Underwriters Laboratories for self-closing doors

All Weather Fluid

- Extreme temperature fluid standard

Finishes (Powder Coated)

- EAB, EB, ED, EN and EP (Standard for all exposed surfaces)
- Plated arms only (optional)

Arm Type	Max. Door Opening	Degree of Hold Open
O	180°	N/A
H-Hold Open	180°	80 - 180°
F-Fusible Link	140°	80 - 130°

Standard Application

25-O Arm

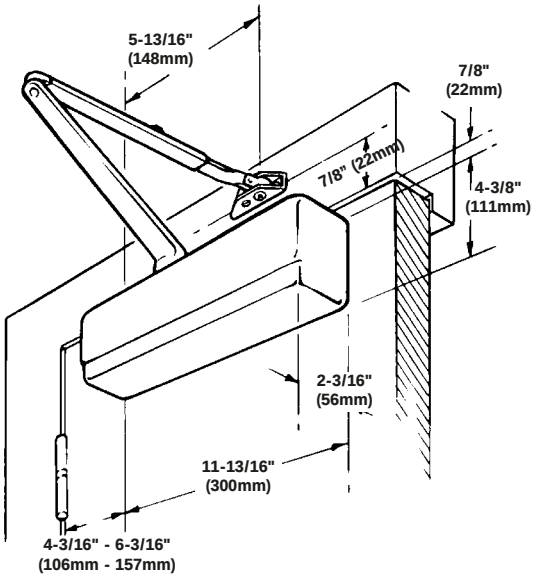

25-OLC Arm

(Low ceiling condition)

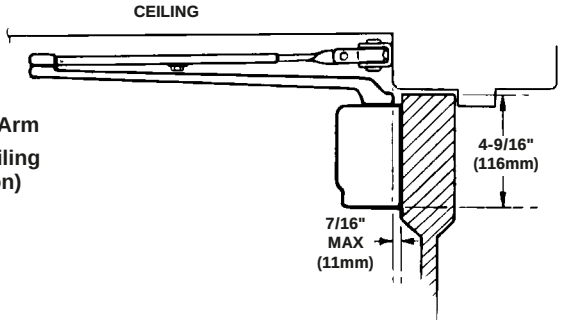

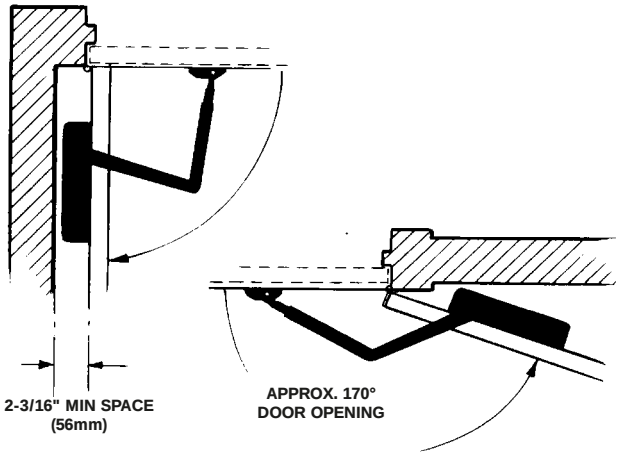

Top Jamb Application

25-OZ Arm

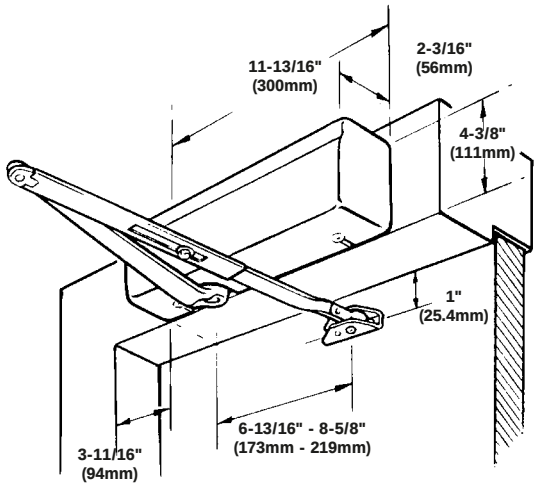

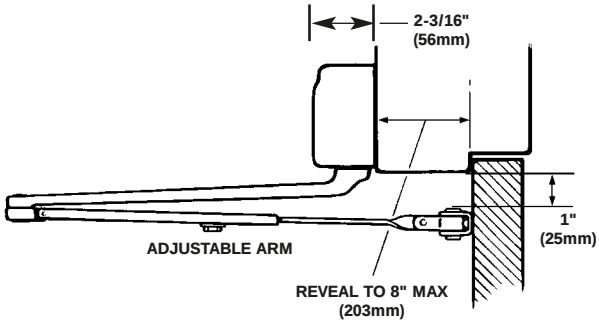

Top Jamb Application (with low ceiling)

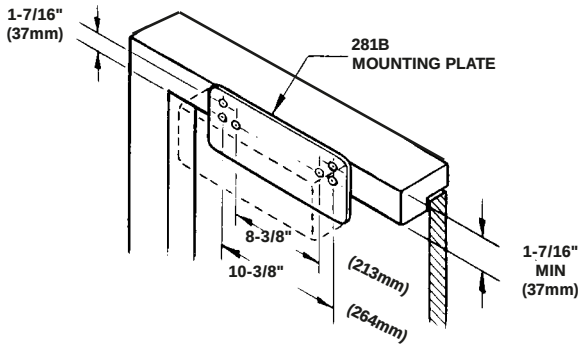

281W Corner Bracket Application

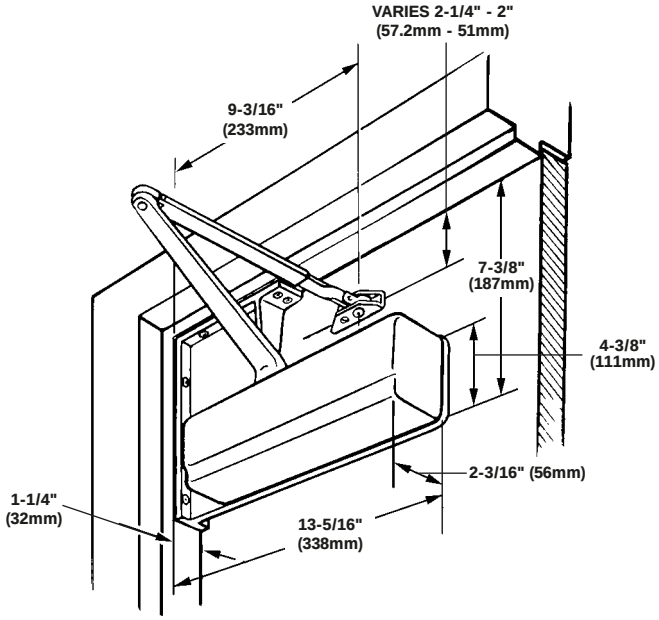

Double Egress Application

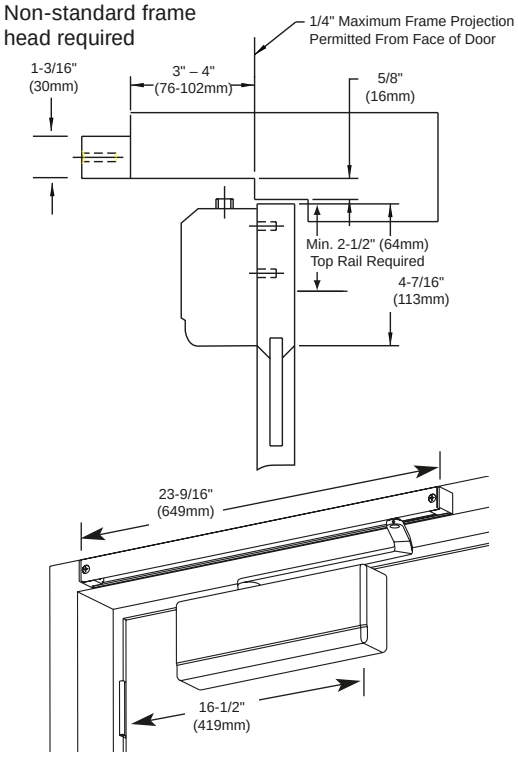

Parallel Arm Application

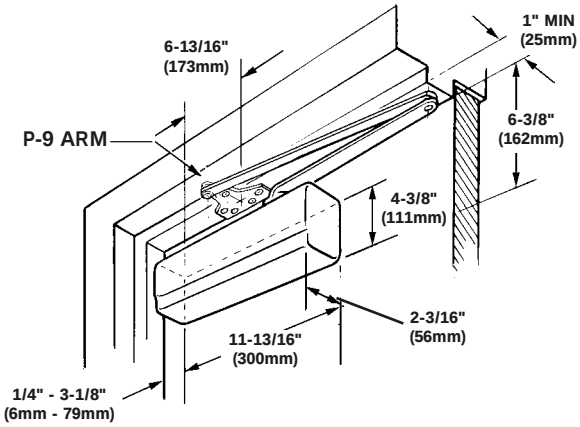

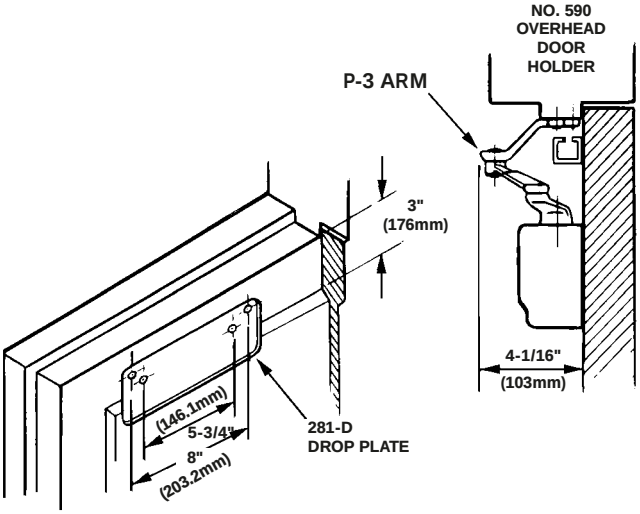

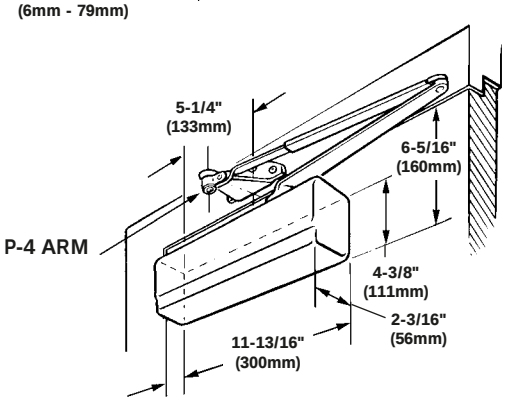

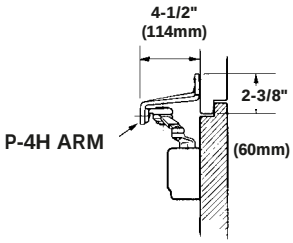

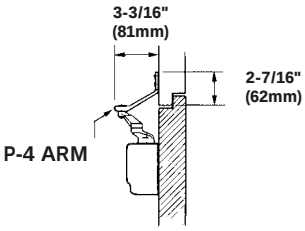

268/278 Series Powerglide® Door Closers Dimension Details

SARGENT
1-800-727-5477
www.sargentlock.com

268 Door Closer

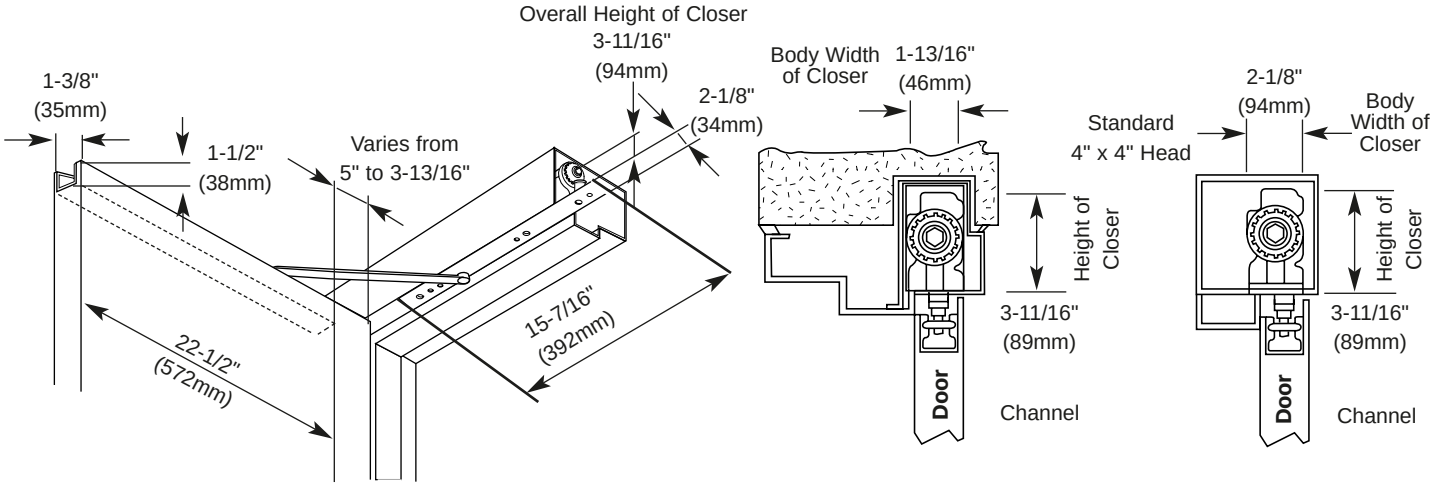

278 Door Closer

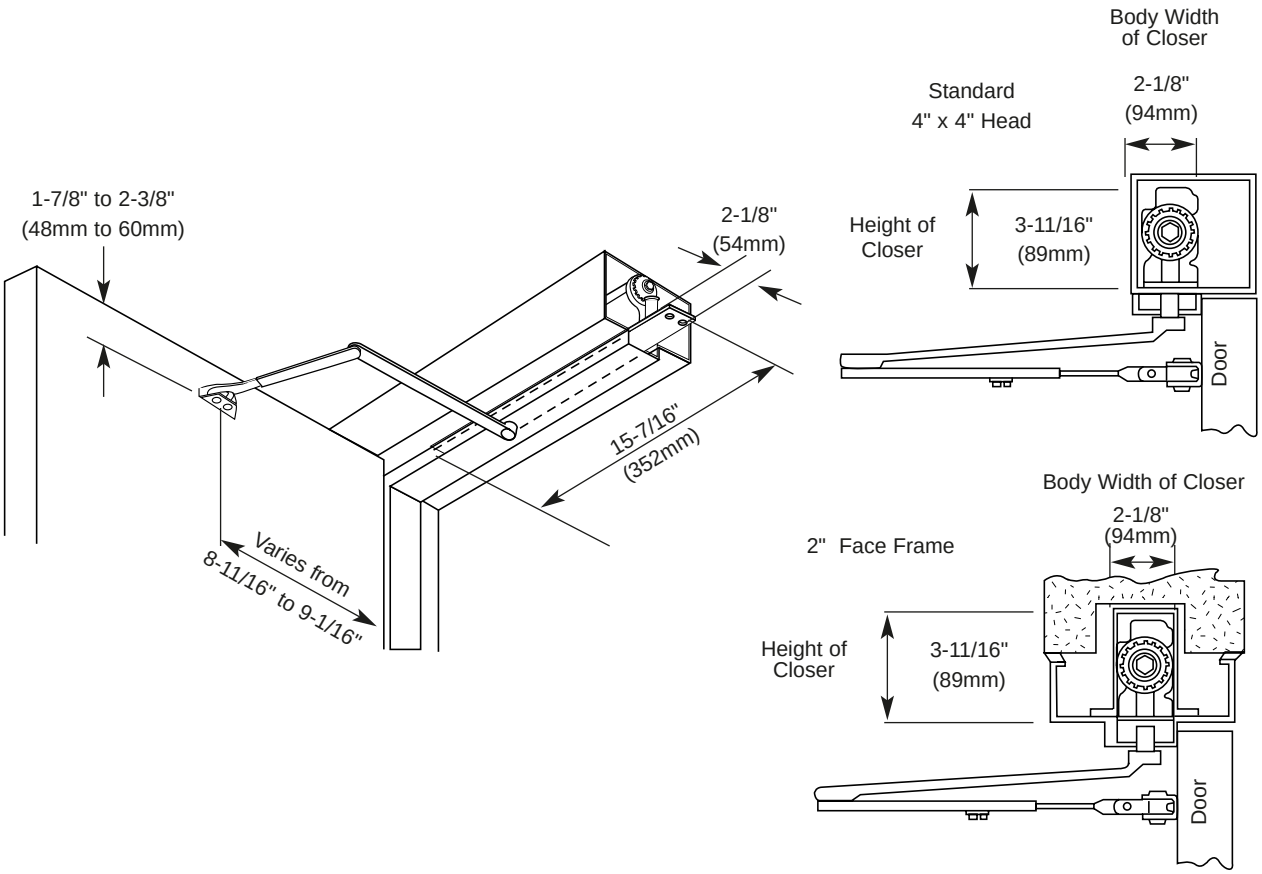

278/281 Series Powerglide® Door Closers ADA Compliance

SARGENT
1-800-727-5477
www.sargentlock.com

Standard Application 281

Top Jamb Concealed Closer 278

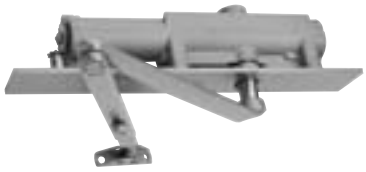

Factors to Consider

- Door Weight
- Door Width
- Excessive Draft Pressure
- Sound & Smoke Seal

Parallel Arm Application 281

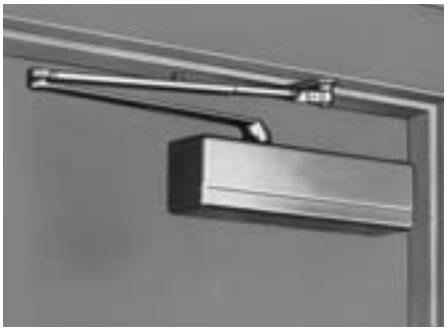

Top Jamb Application 281

The 281 and 278 door closers are designed to meet the opening force requirements established by the Americans with Disabilities Act defining 5 lbs. of opening force for interior and 8 lbs. for exterior doors. A special spring design affording easier access and allowing exterior door control is used. Where excessive draft and pressure conditions exist or when extra heavy doors are used, spring should be adjusted for stronger setting. Meeting ADA requirements can be achieved at all applications shown above with simple spring adjustment. Various field conditions (drafts) exist that make the use of ADA adjustments ineffective. When these conditions exist, refer to SARGENT 4000 Series auto operator.

Door Closer and Overhead Stop/Holder Compatibility Chart

SARGENT
1-800-727-5477
www.sargentlock.com

Introduction to SARGENT Overhead Holders and Stops

SARGENT overhead holders/stops are designed to protect the door and hardware from the abuse commonly found in commercial and institutional applications. With **four different series** that include **surface** or **concealed**, **standard** or **heavy duty**, SARGENT has a holder/stop for your door.

Overhead holders/stops are the most practical method of stopping a door as they eliminate unsightly wall stops and dangerous floor stops. Using an overhead holder/stop distributes abusive forces rather than concentrating them toward the hinge. Some door closers are available with holders/stops incorporated in them. These work well in most cases, but when subjected to continuous abuse can lead to frame and hinge failure. SARGENT overhead holders/stops are designed and manufactured for many years of service and come with a 5 year warranty.

Frequently Used Overhead Stops used with the 281 Series

- **Standard Door Closer Applications (PULL SIDE MOUNT) Not Shown**

  590 Series with 281 Series "O" Arm

  690 Series with 281 Series with "O" Arm

  1530 Series with 281 Series with "O" Arm

  1540 Series with 281 Series with "O" Arm

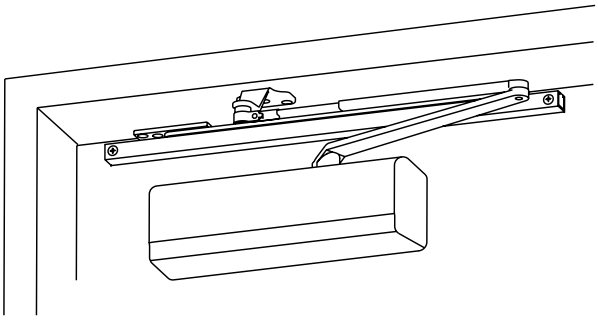

281-P3 Shown w/1548S

- **Parallel Arm Door Closer Applications (PUSH SIDE MOUNT)**

  590 Series with 281 Series "P3" Arm

  690 Series with 281 Series with "P9" Arm

  690 Series with 281 Series with "P10" Arm

  1530 Series with 281 Series with "P9" Arm

  1530 Series with 281 Series with "P10" Arm

  1540 Series with 281 Series with "P3" Arm

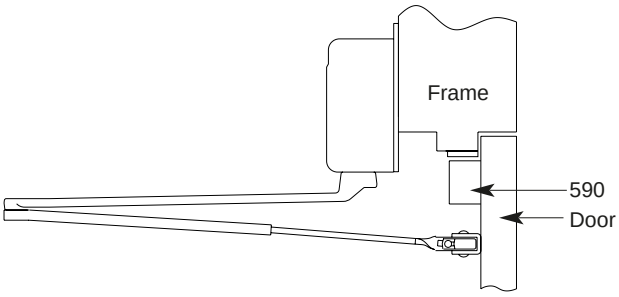

281 0Z Shown w/597S

- **Parallel Arm Door Closer Applications Used with a Flush Frame**

  590 Series with 281 Series "P4" Arm

  690 Series with 281 Series with "P4" Arm

  1530 Series with 281 Series with "P4" Arm

  1540 Series with 281 Series with "P4" Arm

- **Inverted Top Jamb Applications**

  590, 690, 1530, 1540 Series with either 281, 351, 1430 Series and "O" 0Z, 0ZA Arm

Note: This chart is only a quick reference and some applications may require the use of 145 or 195 angle bracket

For applications not shown refer to SARGENT Overhead Holders & Stop catalog

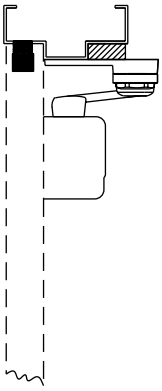

281 P10 Shown w/697S

281 Series Powerglide® Door Closers General Information

SARGENT
1-800-727-5477
www.sargentlock.com

Closer Adjustment

All closers in this catalog are equipped with key control valves and spring adjustment to discourage unauthorized tampering with closing cycle adjustments.

Door and Latching Speeds

- Two separate valves control the closing speed of the door
- Door speed valve controls the speed of the door from full opening to within approximately 2" to 10" of the closed position
- Latching speed valve controls the speed of the door from approximately 2" to 10" to full closing
- Turning either valve in a clockwise direction slows the speed of the door.

Backcheck

- Backcheck is designed to start at approximately 70° door opening
- Backcheck feature is not to be used as a positive stop
- A door stop must be used

Adjustable Spring Feature

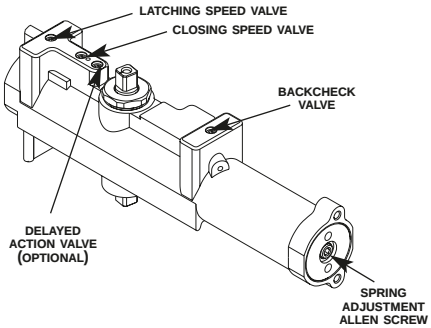

- All door closer series offer an adjustable spring feature
- Spring power of the closer can be increased from a Size 1 closer to a Size 6 by turning the spring adjustment screw clockwise

Delayed Action (optional feature)

- A delayed action feature is available for all applications and arms
- This feature permits the door to close very slowly through the delayed action cycle range
- Closers with this feature are furnished with backcheck as standard

Arm Leverage Adjustment

Closers using "O" or "F" arms have the provision to increase closing power by 15% by adjusting foot pivot.

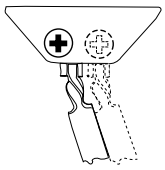

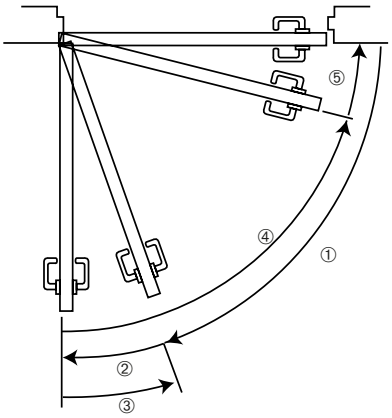

1. Opening Cycle
2. Backcheck
3. Delayed Action Cycle
4. Closing Cycle
5. Latching Cycle

Through-bolts and Mortise Nuts

- When through-bolting is ordered, factory will furnish mortise nuts for use with the machine screws furnished with the closer
- Nuts are sized to accommodate 1-3/4" (44mm) standard or 1-3/8" (35mm) thick doors – when specified on order
- For 2-1/4" (57mm) thick doors, through- bolts will be furnished with mortise nuts
- Through-bolting for 2-1/4" (57mm) thick hollow metal doors require bridge type reinforcement to prevent collapse of top rail when through-bolts are tightened

ANSI Standards

ARM	TYPE	ARM	TYPE
O	CO2011	PF9	CO2101
P9	CO2021	P10	CO2021
H	CO2051	PS/CPS	CO2021
PH9	CO2061	CPSH/PSH	CO2061
F	CO2091		

All are certified ANSI types including options PT4 A, B, D, E, F, G, H

Underwriters' Laboratories Listing

All SARGENT Powerglide® Door Closers have been listed by the Underwriters Laboratories, Inc. as follows:

"For Self-Closing Doors Without Hold-Open Feature"

"For Automatic Doors With Hold-Open Arm Embodying Fusible Link Release"

ANSI/BHMA Specifications

The 281, 268, 278 series doors closers are designed to meet the requirements of ANSI A156.4 Grade 1.

Complies with UL-10C and UBC 7-2C (1997) Positive Pressure Fire Test.

All Weather Fluid Standard

Operation from -40° to 147°.

Finishes (Powder Coated)

Arms and metal covers powder coated as standard

EAB Brass enamel to be used with brass finishes

EB Bronze enamel to match 10B

ED Bronze enamel to match 20D

EN Aluminum enamel

EP Bronze enamel to match US10 and plated

Special Rust Inhibitor Process (SRI)

Additional process for closer body, bracket and arm provides extra layer of protection for extreme corrosive environments

Spray Paint

Touch up spray paint available in the following colors: EB, ED, EN, EP, EAB

Finishes (Plated)

Optional architectural plated arms and covers available – US3, US4, US9, US10, US10B, 20D, US26, US26D

SARGENT
1-800-727-5477
www.sargentlock.com

Features common to Powerglide® Door Closers 281/268/278

1. All closers for both interior and exterior doors shall be the product of one manufacturer and be matched in style.
2. Surface closers shall be adjustable to provide sizes 1 through 6 and comply with ADA.
3. Full rack and pinion construction.
4. Closing speed, latching speed and backcheck shall be controlled by key operated valves.
5. Delayed action feature shall be available and controlled by a separate valve. Delayed action shall be available in addition to, not in lieu of, backcheck.
6. The one piece closer body shall be of close grained porous free cast iron with a minimum wall thickness of 5/32" (4mm).
7. An increase of 15% in closing power shall be provided by means of adjustment of the arm leverage at the foot connection. (Standard Arm)
8. All arms shall be finely finished with heavy duty forged steel main arm.
9. Two mounting positions of the closer shall meet all requirements. Standard mountings shall provide 120° door opening and alternate mounting 180° door opening.
10. All closers shall be suitable for standard, corner bracket, top jamb, parallel arm and track type applications when provided with proper brackets and arms.
11. Closer covers shall be of high impact plastic material of flame retardant grade, secured by machine screws.
12. Projection of closer body from door shall not exceed 2-3/16" (56mm).
13. Closers shall be non-handed to meet a variety of door conditions and design requirements.
14. The spindle shaft shall be sealed hydraulically with an "O" ring.
15. The 268 door closer shall be mounted overhead and concealed with no exposed surfaces when door is in closed position.
16. The 278 closer shall have a fully overhead concealed body with exposed forged steel arm.
17. Specify desired options such as: Metal Cover, Security Package, (SRI) Special Rust Inhibitor Process, (ABC) Advanced Back Check, (TB) Through-bolting, (DA) Delayed Action and Architectural Plated Finishes.
18. Closers should have two pressure relief valves standard (opening and closing cycles).
19. All closers to have a 10 year limited warranty.
20. Closers should comply with UL-10C and UBC 7-2 (1997) Positive Pressure Fire Test.

281 Series Powerglide® Door Closers Special Conditions, Packaging & How To Order

SARGENT
1-800-727-5477
www.sargentlock.com

Special Conditions

The SARGENT Template Book contains templates for all standard applications of SARGENT Door Closers with SARGENT overhead door holders. To insure a satisfactory installation for other holders, it is recommended that complete details be submitted as follows:

- Type, size and make of holder
- Holding position (maximum door opening)
- Submit holder template being used
- Closer application being used
- Size and type of butt or hinge

In the case of unusual door, frame and butt conditions where regular goods will not meet requirements, submit drawings and complete details specifying the degree of door openings required. Please include the size of the butts (when 6" or over) so special mounting templates can be furnished to ensure a full 180° opening.

Through-bolts and Mortise Nuts

- When through-bolting is ordered, factory will furnish mortise nuts for use with the machine screws furnished with the closer
- Nuts are sized to accommodate 1-3/4" (44mm) standard or 1-3/8" (35mm) thick doors – when specified on order
- For 2-1/4" (57mm) thick doors, through-bolts will be furnished with mortise nuts
- Through-bolting for 2-1/4" (57mm) thick hollow metal doors require bridge type reinforcement to prevent collapse of top rail when through-bolts are tightened

Packing

- Closer assemblies are packaged 4 per carton
- Conversion units are packaged 10 per carton
- On request, door closers will be packed 2 per carton.

Series	Number per Carton	Approx. wt per Carton
281	2-Standard (2 upon request)	20 lbs. per 2
Screw	Prefix 36 – 6 lobe screws	
Substitutions:	Prefix 37 – Spanner head screws	

How To Order Complete Door Closer

		Example
Series	281	281
Delayed Action	When delayed action is required specify suffix DA	281 DA
Arm with Closer	See applicable catalog section for arms available	281 DA P10
Finish	EB – Bronze Enamel to match 10B ED – Bronze Enamel to match 20D EN – Aluminum Enamel EP – Bronze Enamel to match US10 EAB – Brass Enamel to be used with brass finishes	281 DA P10 EB
Hand (Applies to F arms, metal covers and 268 & 278 Series only)	Non-handed	281 DA P10 EB
Through-bolts and Mortise Nuts	When ordering mortise nuts use suffix TB 1-3/4"(44.5mm) Std door thickness, for all other specify	281 DA P10 EB TB
Corrosion Protection	Special rust inhibitor finish (arm and body) suffix SRI	281 DA P10 EB TB SRI

How To Order Accessories

		Example
Arm Only	Specify arm required and finish	25-PSH EN
Arm conversion Units	Specify unit and finish	125-P4 EB
Cover (Standard)		281-C x finish
Cover (Metal)		281-MC x finish x hand
Accessories	Specify accessory and finish – See applicable catalog section	281-D EB

NOTE: When complete closer assembly is ordered with an accessory, order accessory as a separate item

ESSEX™
THE TOTAL OPENINGS PEOPLE

SARGENT Manufacturing Company • 100 Sargent Drive • P.O. Box 9725 • New Haven • CT 06536-0915
Phone: 800-727-5477 • Fax: 888-863-5054 • Web site: www.sargentlock.com
SARGENT of Canada • Phone: 905-940-2040 • Fax: 905-940-3242 • Web site: www.sargentcanada.ca

Founded in 1864, SARGENT® is a market leader in locksets, cylinders, door closers, exit devices, electro-mechanical products and access control systems for new construction, renovation and replacement applications. The company's customer base includes commercial construction, institutional and industrial markets.

The ASSA ABLOY Group is the world's leading manufacturer and supplier of locking solutions, dedicated to satisfying end-user needs for security, safety and convenience.