SARGENT®

MPower™ 4000 SERIES

Low Energy Door Operator

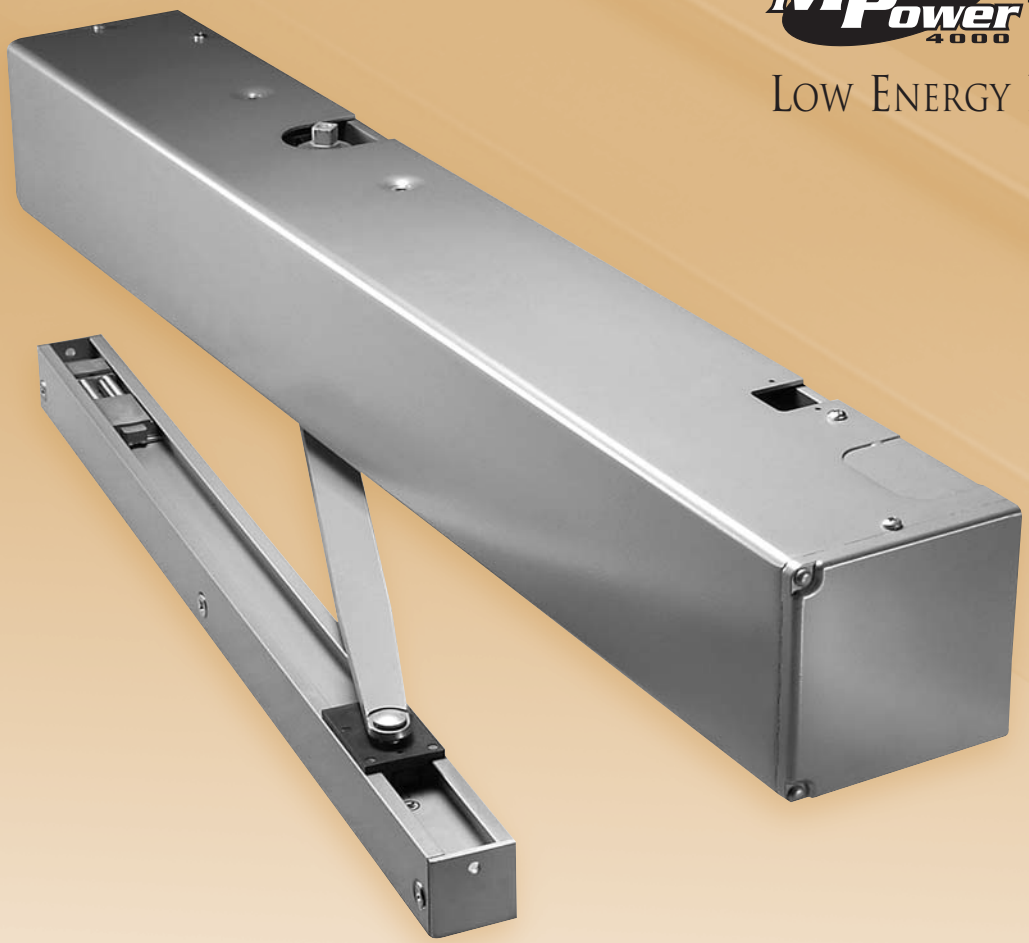

Complies with ADA Accessibility Guidelines

An ASSA ABLOY Group company

ASSA ABLOY

SARGENT MPower 4000
Low Energy Door Operator

SARGENT
1-800-727-5477
www.sargentlock.com

Table of Contents

Table of Contents	Page
Overview and Features	1
Functions, Electrical Data and Certifications	2
Typical Door Traffic	3
Standard Applications	4-5
Drop Applications	6-7
Typical System Applications	8-9
Technical Details	10-11
Accessories	12-13
Assemblies	14
Architectural Specification	15
How To Order	16

On the Cover

4060 MPower 4000

SARGENT MPower 4000 Low Energy Door Operator Overview

SARGENT
1-800-727-5477
www.sargentlock.com

The SARGENT MPower 4000 is a "low energy" power door operator designed to automatically open and close doors with a lower energy opening force.

The following chart can be used as a guide for suitability of the door operator to various applications:

Operator Type	Common Applications	Safety Equipment Required
MPower 4000 Low Energy	(LOW TO MODERATE TRAFFIC) Executive Offices, ADA Dorm Rooms, ADA Hotel Rooms, Retirement Homes, Educational or Assisted Living Facilities, Office/Warehouse Corridor Doors, ADA Auxiliary Entrances, ADA Accessible Restrooms, Fire Doors, Smoke Ventilation Doors	Signage
High Energy By Others	(HIGH TRAFFIC) Hospital Emergency Entrances & Operating Rooms, Airport Entrances, Large Office Building or Dept. Store Entrances	Guide Rails, Safety Mats, Sensors & Signage

The Americans with Disabilities Act (ADA) is a law administered by the U.S. Department of Justice. Its' guidelines under ADA Regulation for Title III are detailed on the ADA website: www.ada.gov.

The SARGENT MPower fully complies with ADA and ANSI A156.19 requirements. It functions using an A/C motor and hydraulic pump to activate a heavy-duty hydraulic door closer controlled by an Electronic Limit Switch (ELS) circuit board that limits the degree of door swing. The MPower is your best choice in a low energy power door operator.

Features include:

- Ease of installation and setup
  - Simple instructions
  - Uses push-button settings for door open and door close positions
- Application versatility and ease of adjustment
  - Field-reversible (handed unit available)
  - Push side or pull side mounting units available
  - Power Operator function can be configured during installation
  - Interfaces with electric hardware and integrates with access control systems
- Operates as mechanical surface closer during close cycles or if power is turned off
  - Critical for fire rated doors
  - Spring force provides the feel of a normal manual door closer
  - Door can be opened manually if desired
- Operation startup options
  - Wall switches
  - Radio frequency device
  - Push and Go
- Hold Open options
  - 0-30 seconds (5 seconds minimum required for ADA and ANSI A156.19)
  - Choice of indefinite hold open features
- Obstruction Detection
  - Door closes if it hits an obstruction while opening
  - Door re-opens once if it hits an obstruction while closing

SARGENT MPower 4000
Low Energy Door Operator
Function, Electrical Data and Certifications

SARGENT
1-800-727-5477
www.sargentlock.com

Field Reversable Unit shown (without cover)

Functions

- Heavy Duty series door closer
  - Adjustable spring power
  - Backcheck valve
  - Backcheck Position valve
  - Door Speed valve
  - Latch Speed valve
  - Speed Control valve
  - Pressure Adjustment valve
- Field Reversible or handed units available (Drop Applications require handed unit)
- Push Side or Pull Side applications
- Power Assist selector switch
- Push and Go selector switch
- Open/Close Obstruction Detection
- Motor startup delay adjustment
- Vestibule Function Delay adjustment (For sequencing two or more units)
- Door Hold Open Delay adjustment
- Single pole double throw (SPDT) relay output
- SPDT Relay Output time adjustment
- SPDT Alarm Output
- Blow Open Function for smoke ventilation
- Infinite Hold Open function
- Presence Detector input
- 24 VDC (unregulated) @ 500 mA output
- Selector Mode Switch (3 position)
  - OFF – Turns unit off
  - ON – Turns unit on
  - HOLD OPEN – Activates the unit to the hold open position indefinitely

Electrical Data

- Power Input: 120 VAC, 60 Hz (+10%, -15%)
- Current Draw 2 amp
- Auxiliary Output 24 VDC (unregulated) @ 500 mA
- SPDT relay output for controlling electric strikes or electric locks not to exceed 5 amp @ 24 VDC
- External 24 VDC regulated and filtered power supply needed for 56- latch retraction applications

Certifications

- UL and cUL for use on fire and smoke barrier doors
- Meets requirements for UL10C and UBC 7.2 for positive pressure
- 2-year warranty (as per current price list, terms and conditions at time of purchase)
- Americans with Disabilities Act (ADA)
- BHMA 156.19 for Low Energy and Power Assist operated doors

Low Energy and High Energy Door Operator Summary

Operator Type	Common Applications	Safety Equipment Required	Door Width*/Weight	Opening Speed (Seconds) Max	Hold Open Delay (Seconds) Min**	Closing Speed (Seconds) Min	Complete Cycle (Seconds) Min	Max. Force to Stop Door
Low Energy	Executive Offices, ADA Dorm Rooms, ADA Hotel Rooms, Retirement Homes, Educational or Assisted Living Facilities, Office/Warehouse Corridor Doors, ADA Auxiliary Entrances, ADA Accessible Restrooms, Fire Doors, Smoke Ventilation Doors	Signage	36"/125lbs (91cm / 56kg)	5	5	5	15	15lbs
			48"/200lbs (122cm / 91kg)	7	7	7	19	
High Energy	(HIGH TRAFFIC) Hospital Emergency Entrances & Operating Rooms, Airport Entrances, Large Office Building or Dept. Store Entrances	Guide Rails, Safety Mats, Sensors & Signage	36"/125lbs (91cm / 56kg)	3	3	3	11.5	40lbs
			48"/125lbs (122cm / 91kg)	3	3	3	13	

Note: *Minimum and maximum door width for single door, hung on butt hinges
**Maximum delay is 30 seconds

SARGENT
1-800-727-5477
www.sargentlock.com

Typical Door Traffic Categories

APPLICATION	DAILY AVERAGE	YEARLY AVERAGE	USAGE	OPERATOR
Executive Office	Up to 100	Up to 22,000	Low	MPower 4000 Low Energy
ADA Dorm Room				
ADA Hotel or Retirement Home Room				
Assisted Living Common Area Door				
Office/Warehouse Door				
ADA Auxiliary Entrance				
ADA Accessible Restroom				
Government/Public Restroom	300	108,000	Moderate	
Hospital Corridor Door	600	220,000		
Airport Entrance	3,000*	1,100,000	High	High Energy By Others
Large Office Building Entrance	4,000*	1,200,000		
Large Dept. Store Entrance	5,000*	1,500,000		

* Represents 'powered' cycles

Note: The above applications and data are examples for guidance only. Contact your ESSEX Sales Representative or SARGENT Technical Consultant to confirm the suitability of your specification and system design.

SARGENT MPower 4000
Low Energy Door Operator
Standard Applications

SARGENT
1-800-727-5477
www.sargentlock.com

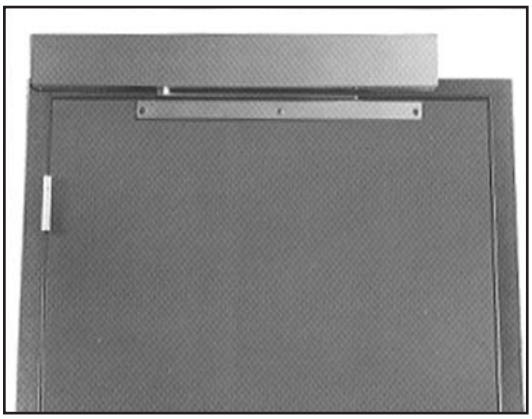

4060/4067
HINGE (PULL) SIDE OF DOOR
- Spring buffered stop assembly in slide track

4060 RIGID ARM AND SLIDE TRACK
- 85° to 110° templated door openings in 5° increments
- 1/8" (3mm) maximum frame reveal

4067 DOUBLE EGRESS ARM AND SLIDE TRACK
- From 1/8" to 3" (3 to 76mm) frame reveal
- Specify hand when ordering

An auxiliary stop is suggested where severe conditions exist.

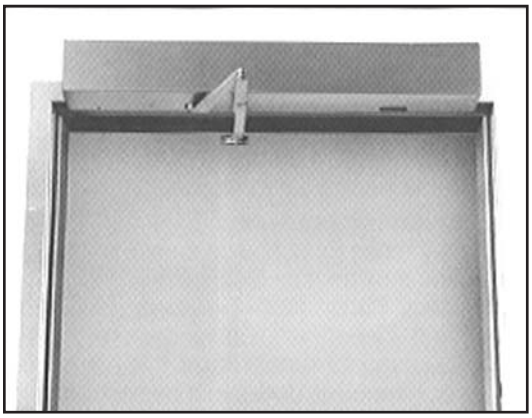

4051/4052
STOP (PUSH) SIDE OF DOOR

STANDARD DUTY DOUBLE LEVER ARM
- Frame reveals 2-3/4" to 7" (70 to 178mm)
- An auxiliary door stop is required for these applications.

SERIES	DOOR OPENING
4051	Up to 110°
4052	From 110° to 180°

Note: Contact factory for use on doors exceeding 250lbs (113kg)

SARGENT MPower 4000
Low Energy Door Operator
Standard Applications

SARGENT
1-800-727-5477
www.sargentlock.com

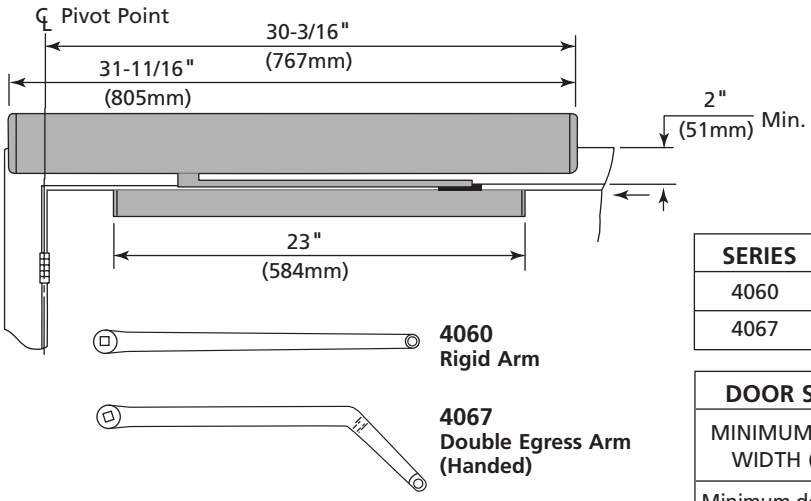

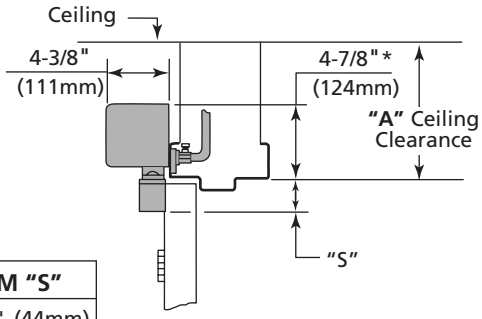

SERIES	DIM "S"
4060	1-3/4" (44mm)
4067	2-3/8" (60mm)

DOOR SWING	85°	90°	95°	100°	105°	110°
MINIMUM DOOR WIDTH (mm)	32" (813)	31" (787)	30" (762)	30" (762)	29" (737)	29" (737)
Minimum door width for all double egress applications is 29" (737mm)						

*** Handed unit dimension shown. For Field Reversible unit add 3/8" (9mm).**
If dimension "A" less than 10" (254mm) order handed unit with CL prefix.

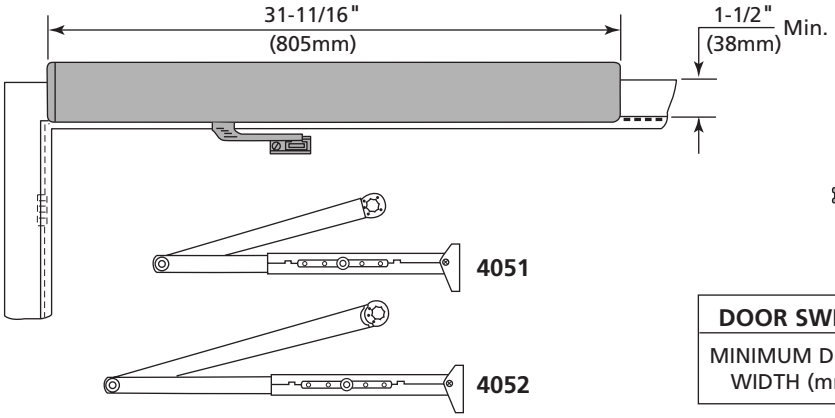

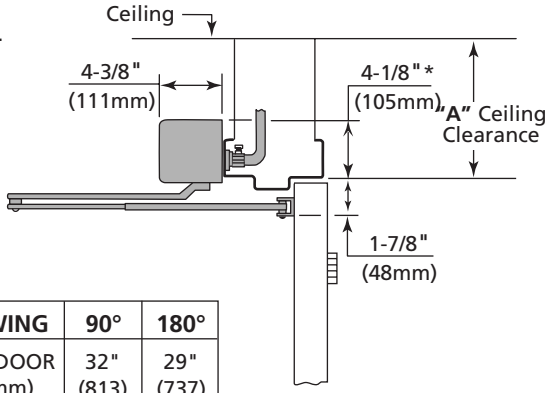

DOOR SWING	90°	180°
MINIMUM DOOR WIDTH (mm)	32" (813)	29" (737)

*** Handed unit dimension shown. For Field Reversible unit add 3/8" (9mm).**
If dimension "A" less than 5" (127mm) use 4001D for 4051, 4002D for 4052 drop bracket (Drop Application) see page 6 and handed unit with CL prefix.
If dimension "A" less than 10" (254mm) order handed unit with CL prefix.

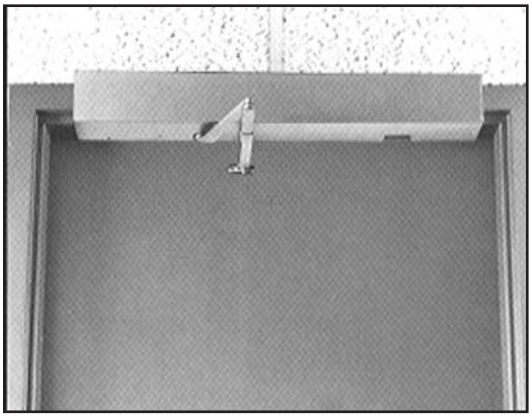

LH Shown

4051 with 4001D Drop Bracket

STOP (PUSH) SIDE OF DOOR – UP TO 110° DOOR OPENING
STANDARD DUTY DOUBLE LEVER ARM

- Frame reveals 2-3/4" to 7" (70 to 178mm)
- 110° maximum door opening. See 4152 for openings to 180°
- Auxiliary door stop is required for this application
- Minimum door width is 33" (838mm)

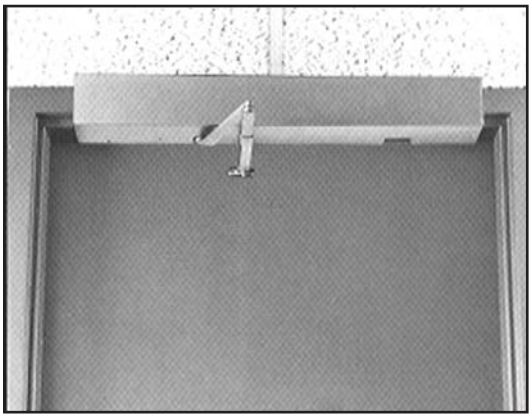

LH Shown

4052 with 4002D Drop Bracket Kit

STOP (PUSH) SIDE OF DOOR – OVER 110° TO 180° DOOR OPENING
STANDARD DUTY DOUBLE LEVER ARM

- Frame reveals 2-3/4" to 7" (70 to 178mm)
- Over 110° to 180°
- Auxiliary door stop is required for this application
- Minimum door width is 31" (787mm)

NOTE: Drop application for less than 7" (178mm) minimum ceiling clearance requires handed unit – Order CL prefix (see next page)
Drop application for use with SARGENT overhead stop can use non-handed or handed unit.

NOTE: Contact factory for use on doors exceeding 250lbs. (113kg)

SARGENT MPower 4000
Low Energy Door Operator
Drop Applications

SARGENT
1-800-727-5477
www.sargentlock.com

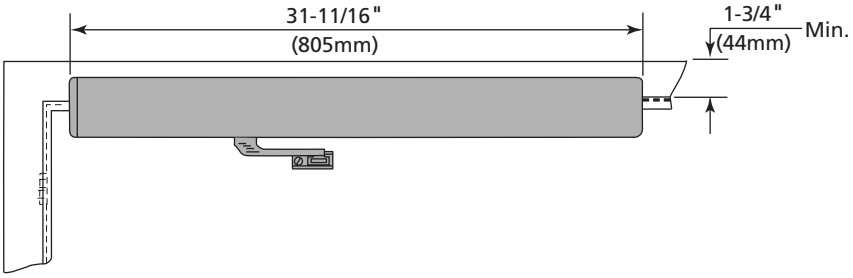

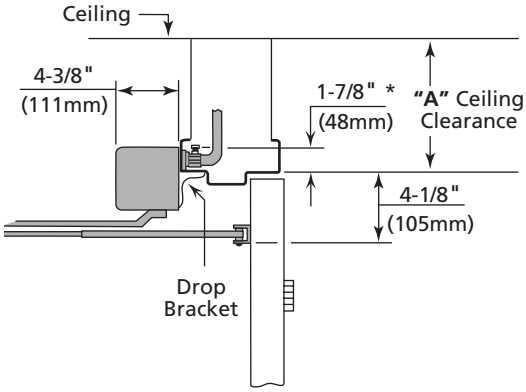

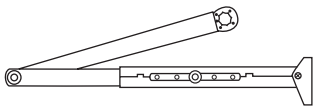

4051
110° Maximum Door Opening
Minimum Door Width 33" (838mm)

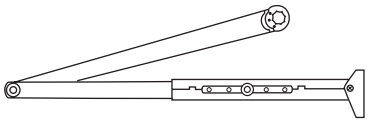

4052
Over 110° to 180° Door Opening
Minimum Door Width 31" (787mm)

*** Handed unit dimension shown. For Field Reversible unit add 3/8" (9mm).**
If "A" less than 7" (178mm) handed unit with CL-prefix is required.

SARGENT MPower 4000
Low Energy Door Operator
Typical System Applications

SARGENT
1-800-727-5477
www.sargentlock.com

MPower 4000 WITH MAGNETIC LOCK

Opening Description: Fail Safe ADA Opening - Magnetic Lock & Door Operator

Application
Non-Fire Rated Glass Door - Interior or Exterior Office or Main Entrance Openings

Operation
- Lock or unlock system by a key control switch at all times
- Free ingress & egress using the door operator or manually when unlocked
- Outside door switch will be inactive denying ingress other than by card when locked
- To exit, inside door switch will unlock magnetic lock and open the door or manually push bar to exit
- Door operator acts as standard door closer when entering or exiting manually

Material
- Door Operator
- Electromagnetic Lock
- Electric Hinge
- Mechanical Touch Bar with Switch
- 2 Door Switches
- Maintained Key Switch
- Card Reader

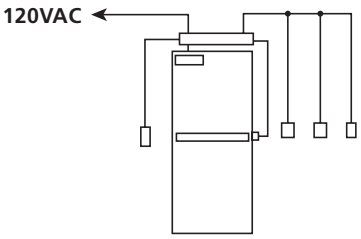

ELECTRIC STRIKES

Opening Description: Fail Secure ADA Opening – Double Electric Strike & Door Operators on Pair of Doors

Application
Interior, Non-Fire Rated Wood or Metal Doors – Corridor or Emergency Room Openings

Operation
- Doors are to be closed and latched at all times
- Key Switch activates and deactivates door switches to signal door operators
- Active door switch will energize the electric strike and automatically open doors
- Access manually from the push side only when door switches are inactive
- Door operators will act as standard door closers when door switches are inactive

Material
- 2 Door Operators
- Double Electric Strike
- 2 Surface Vertical Rod Exit Devices
- 2 Door Switches
- Maintained Key Switch

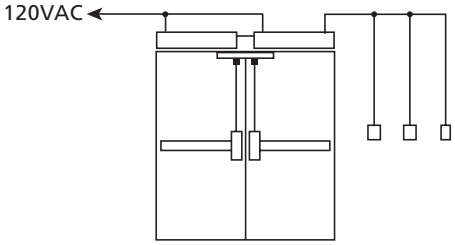

VESTIBULE

Opening Description: Vestibule – Two Single Doors & Operators

Application
Interior or Exterior Non-Rated Glass, Wood or Metal Doors – Hospitals, College Dorms, Hotels and other Public Buildings

Operation
- Doors are closed but not latched at all times when not activated
- 2 door switches outside of vestibule operate closest door first, then second door
- 2 door switches inside vestibule operate closest door only

Material
- 2 Door Operators
- 4 Door Switches

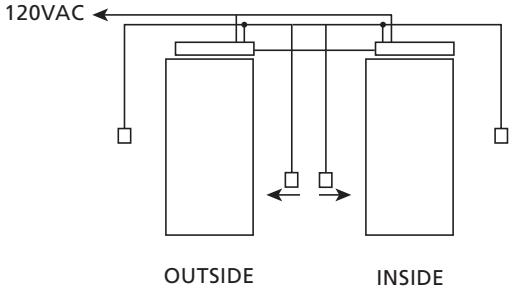

VESTIBULE (TWO PAIR)

Opening Description: Vestibule – Two Pairs of Doors & Operators

Application
Exterior Non-Rated Glass Doors – Hospitals, College Dorms, Large Hotels, Convention Centers and other Public Buildings

Operation
- Doors are closed but not latched at all times when not activated
- 2 door switches outside of vestibule operate closest door first then other door
- 2 door switches inside vestibule operate closest door only

Material
- 4 Door Operators
- 4 Door Switches

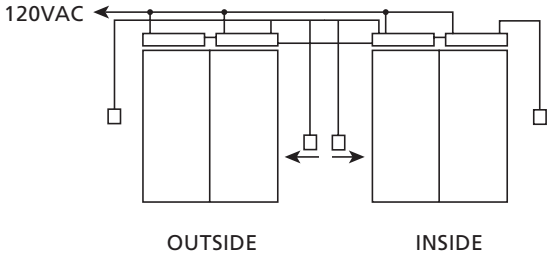

SARGENT MPower 4000
Low Energy Door Operator
Typical System Applications

SARGENT
1-800-727-5477
www.sargentlock.com

MPower 4000 WITH ACCESS CONTROL FOR ENTRY

Opening Description: Fail Secure ADA Opening – Electric Strike & Door Operator

Application
Rated or Non-Fire Rated Metal Door – Interior or Exterior Office, Main Entrance or Stairwell Openings

Operation
- Activate or deactivate system by a key control switch
- When outside, door switch is inactive, ingress will be by card only
- Inside door switch will unlock and open the door automatically
- Push exit device bar to exit at all times
- Door operator acts as standard door closer when entering or exiting manually
- Recommend: HES Electric Strikes

Material
- Door Operator
- Mortise Exit Device
- 2 Door Switches
- Maintained Key Switch
- Card Reader
- Electric Strike

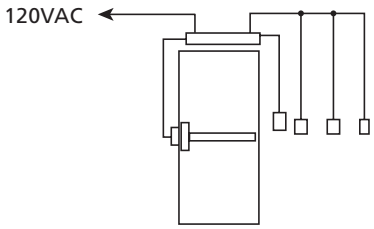

SMOKE VENTILATION

Opening Description: Fail Secure "Blow Open" Opening – Latch Retraction & Door Operators on Pair of Doors

Application
Exterior Metal Doors – Emergency Ventilation Type Openings

Operation
- Doors are to be closed and latched at all times
- Fire Alarm system sends signal to activate door operators and latch retraction devices
- Doors open when activated and stay open until loss of power or until fire alarm is reset
- Door operators act as standard door closers during normal use

Material
- 2 Door Operators
- 2 56- Latch Retraction Vertical Rod Exit Devices
- 1 - 3510 24 VDC regulated and filtered power supply
- 2 Electric Hinges

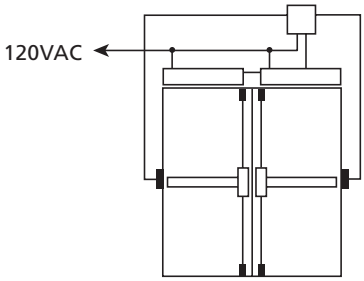

LATCH RETRACTION

Opening Description: Vestibule – Two Single Doors & Operators

Application
Interior or Exterior Rated & Non-Rated Glass, Wood or Metal Doors – Hospitals, College Dorms, Hotels and other Public Buildings

Operation
- Doors are closed and latched at all times
- When activated, latch bolts are retracted and door(s) will automatically open
- 2 door switches outside of vestibule operates closest door first then second door
- 2 door switch inside vestibule operate closest door only
- Recommend: 56- Latch Retraction Exit Devices
- Non-rated devices can be dogged for push/pull operation

Material
- 2 Door Operators
- 4 Door Switches
- 2 Electric Hinges
- 2 56- Rim Latch Retraction Exit Devices

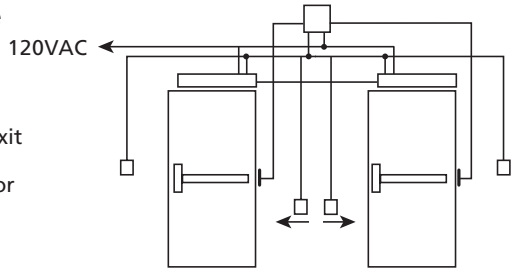

MAGNETIC LOCKS (INTERLOCK)

Opening Description: Vestibule Interlock – Two Pairs of Doors & Operators

Application
Interior or Exterior Rated & Non-Rated Glass, Wood or Metal Doors – ICU Rooms at Hospitals, Research Lab's, Clean Rooms & other Environmentally Controlled Applications

Operation
- Doors are closed and secure by electromagnetic locks
- Only one pair of doors may be open at a time before the opposite doors can open
- When activated, magnetic locks unlock and door(s) will automatically open
- Door switch outside of vestibule operates closest pair of doors
- Either door switch in vestibule operates closest pair of doors when all doors are closed

Material
- 4 Door Operators
- 4 Door Switches
- 2 Double Electromagnetic Locks with Door Position Switch
- 4 Electric Hinges
- 4 Non-latching Touch Bars with Switch
- 1 - 3560 24 VDC regulated and filtered power

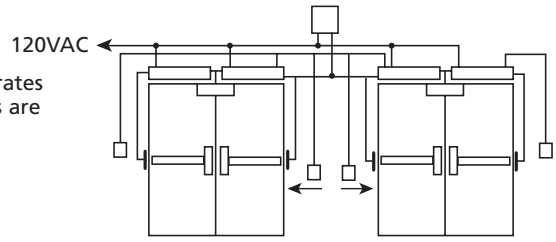

Adjustment and Terminal Locations

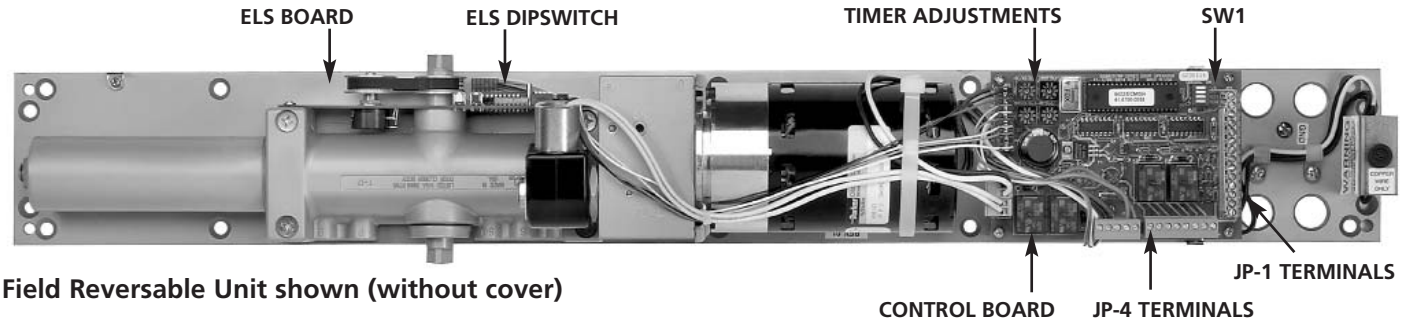

Field Reversable Unit shown (without cover)

ELS - Electronic Limit Switch

Used for open/closed door setting, push and go selection, obstruction timing and Power Operator/Power Assist Function.

- WHT Button - Used for Door Open setting
- BLK Button - Used for Door Closed setting

Dip Switch Settings

1 - Obstruction Detection Delay
2 - Obstruction Detection Delay
3 - Activation Mode (Push and Go)
4 - Power Assist/Power Operator Mode

Control Board
Dip Switch and Timer Adjustments

SW1 DIP Switches

1 - P/A - Door Operator Function Switch - OFF position selects Operator Mode. ON position selects the Assist Mode.
2 - A/D - Alarm Delay Timer - OFF = 30 second delay. ON = 60 second delay. Used with terminal JP1-1
3 - Not used - OFF
4 - Not used - OFF

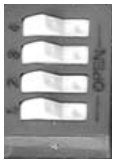

TIMER ADJUSTMENTS

- SW2 - Motor Delay - Delays motor start-up to allow unlocking of electric hardware.
- SW3 - Solenoid Delay - sets the length of time that the relay will stay energized or de-energized. Used for JP4-3, 4 and 5 relay. Allows electric hardware to stay energized long enough for automatic door opening.
- SW4 - Vestibule Delay - Sets the length of time between receipt of the IN Vestibule signal and the motor start-up.
- SW5 - Hold Open Delay/Assist Delay - Sets length of time door holds open at the fully open position for operator function. Sets length of time motor and pump assembly will operate to reduce opening force of door for assist function. When time elapses the door will operate as a standard door closer.

SARGENT
1-800-727-5477
www.sargentlock.com

Control Board JP-1 Terminal: (Input Controls) - wall switches, motions sensors, 2nd M-Power, etc.

1 - O/O - Override Open - Input for blow open or smoke ventilation application - Upon initiation of a closed signal from a fire/smoke alarm panel, the door will open and remain open until signal is terminated. Use with any JP-1 ground.

2 - RES 1 - Not used

3 - AUX2 - Auxiliary Two - This is one of two secondary initiating switch input contacts (JP-10 is the other.) Use with any JP-1 ground to initiate operation.

4 - GND - Ground

5 - INV - IN Vestibule - Used for vestibule function. This contact must be connected to the JP-1-6 terminal from another unit to receive an initiating signal. Use this contact with any JP-1 ground.

6 - OUTV - Out Vestibule - Used for vestibule function - This contact must be connected to terminal JP-5 of another unit to send an initiating signal. Use this contact with any JP-1 ground.

7 - GND - Ground

8 - RFT - Toggle (Maintained Hold Open) This input can be used with any normally open switch. The first initiation of this contact will open door and hold it open. A second initiation of this contact will release and close the door. Use with any JP-1 ground.

9 - GND - Ground

10 - AUX2 - Auxiliary Two - Same as JP1-3 above.

11 - GND - Ground

12 - PDET - Presence Detector - Permits wiring of a sensor to prevent a closed door from opening or a door that is fully open from closing. Use with any JP-1 ground.

13 - GND - Ground

14 - AUX1 - Auxiliary One - Primary initiating switch contact. Initiates door power cycle. For vestibule function, the switch on the initiating side of door is connected to this terminal. Use with any JP-1 ground.

JP-4 Terminal: (Output Controls) - electric strikes, latch retraction exit devices, mag locks, etc.

1 - GND - Ground

2 - + 24VDC

3 - NO1 - Relay Contact - Normally open relay dry contact that is switched when any auxiliary inputs are initiated. Delay can be set for up to 12 seconds. Use with JP4-4 CO-1.

4 - CO1 - Relay Contact - Common relay contact for use with terminals JP4-3 and JP4-5.

5 - NC1 - Relay Contact - Normally closed relay contact that is switched when any auxiliary inputs are initiated. Delay can be set for up to 12 seconds. Use with JP4-4 CO1.

6 - NO2 - Alarm Delay - Normally open dry relay contact that is switched when any auxiliary inputs are initiated. The relay will stay switched for 30 or 60 seconds (selected by dip switch SW1-2 A/D).

7 - CO2 - Alarm Delay - Common contact for use with terminals JP4-6 and JP4-8.

8 - NC2 - Alarm Delay - Normally closed dry contact that is switched when any auxiliary inputs are initiated. The relay will stay switched for 30 or 60 seconds (selected by dip switch SW1-2 A/D).

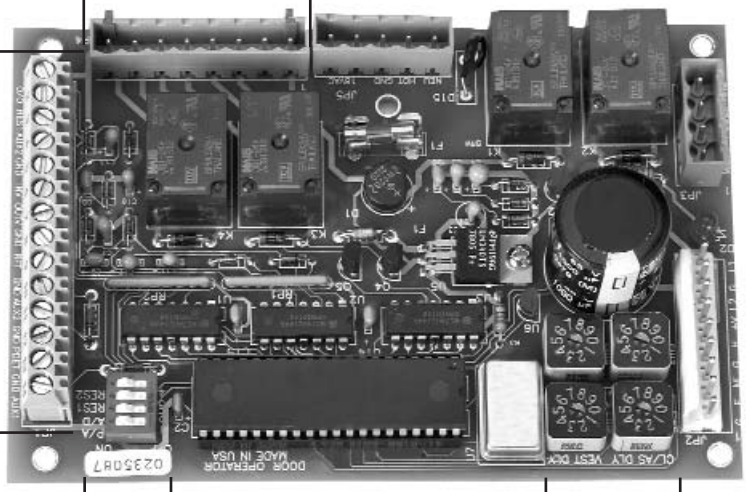

SW 1

SW 2-5 TIMER ADJUSTMENTS

SARGENT MPower 4000 Low Energy Door Operator Accessories

SARGENT
1-800-727-5477
www.sargentlock.com

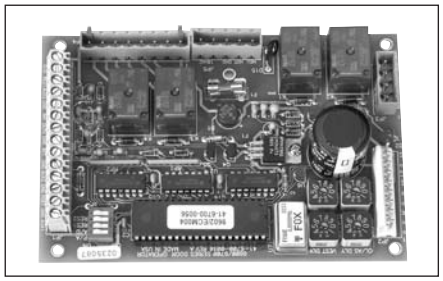

63-4205 Control Board

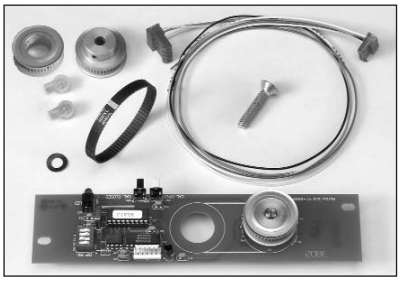

63-4179 Repair kit ELS Board

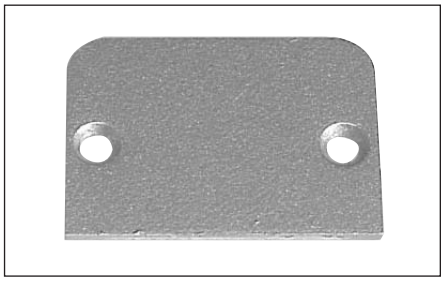

63-0709 Security Plate - Conceals the ON/OFF/HOLD OPEN switch to deter tampering, supplied with operator

63-4188 Operational Signs (kit contains 7 signs) – Supplied with operator

2 per

1 per

1 per

2 per

1 per

1 per

2 per

Wall Switches for Single and Double Gang Boxes

- Durable, N.O. SPDT momentary action switch, Form C, 4 amps@24VDC
- Dimensions: 4296, 96H, 96HP
  Face plate 4-5/8" (117mm) wide x 4-1/2" (114mm) high
- Dimensions: 4297HP
  Face plate 1-3/4" (45mm) wide x 6-11/32" (161mm) high
- Dimensions: 4298
  Face plate 3" (76mm) wide x 4-1/2" (114mm) high
- DBL wall box required for 4296, 4296H, 4296HP
- SGL wall box required for 4297HP, 4298
- Concealed socket mounting screws

4296B

4296H

4296HP

4297

4298

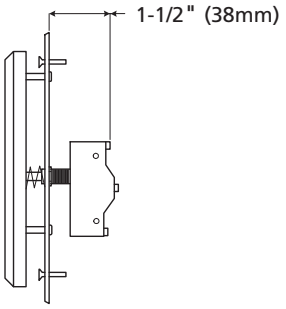

Depth for all Switches

4296HP Shown

4315 Radio Control Receiver Assembly

- Easy to install
- For use with 4313 or 4310
- 24VAC/DC
- 68 billion possible codes
- 315MHz

4310 Radio Control Transmitter

- Compact
- For use with 4315
- Single Button Control
- 650 FT (198m) Operating Range, open air
- 68 billion possible codes
- 315MHz
- 12 VDC alkaline battery included

4313 Radio Control Transmitter

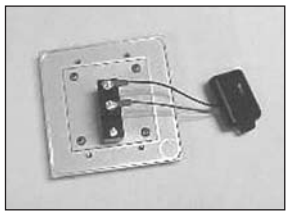

- Compact
- Allows wireless push plate application when used with 4315
- 150 FT (46m) operating range
- Must mount in plastic outlet box (by others)
- Push plate sold separately, see above
- 315MHz

Body Pump and Motor Assemblies

63-4162 (4060)
63-4165 (4051, 4052)
Field Reversible Body Pump and Motor Assembly

63-4160 (4060, 4067)
63-4163 (4051, 4052)
Right Hand Body Pump and Motor Assembly

63-4161 (4060, 4067)
63-4164 (4051, 4052)
Left Hand Body Pump and Motor Assembly

Body, Pump and Motor with ELS (Handed Unit shown)

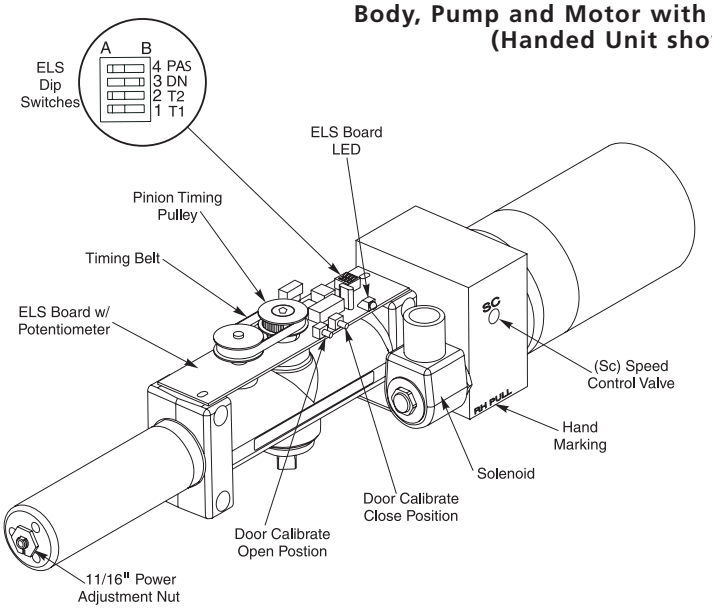

Arm and Track Assemblies

63-4168 - Arm and Track Assembly
63-4167 - Arm Assembly
63-4166 - Track Assembly

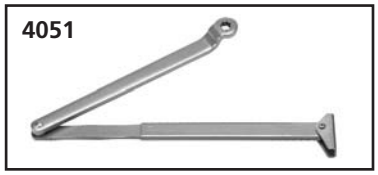

63-4171 - Arm Assembly
63-4170 - Main Arm & Rod
63-4169 - Foot Assembly

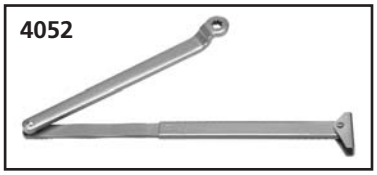

63-4173 - Arm Assembly
63-4172 - Main Arm & Rod
63-4169 - Foot Assembly

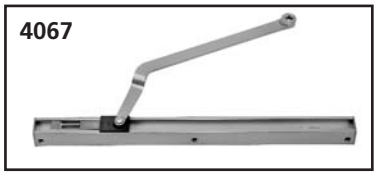

63-4175 - Arm and Track Assembly (LH)
63-4177 - Arm and Track Assembly (RH)
63-4174 - Arm Assembly (LH)
63-4176 - Arm Assembly (RH)
63-4166 - Track Assembly

2.0 Low Energy Door Operators

A. Low energy door operators shall be MPower 4000™ Series by SARGENT Manufacturing Company, New Haven, CT.
B. Low energy door operators shall meet ANSI/BHMA A156.19 requirements.
C. Low energy door operators shall meet UL, cUL, UL10C, and UL10B standards for use on fire doors.
D. Low energy door operators shall have the following adjustments:
   1. Motor assist shall be adjustable from 0 to 30 seconds in 5 second increments.
   2. Door control shall be adjustable to provide compliance with the requirements of the Americans with Disabilities Act (ADA).
   3. Door closing force and backcheck shall be adjustable
   4. Motor start up delay.
   5. Vestibule interface delay.
   6. Electric lock delay.
   7. Door hold open delay up to 30 seconds.
E. Operator units shall provide conventional door closer opening and closing forces unless the power operator motor is activated by an initiating device.
F. Operator units shall have a three position selector mode switch that shall permit units to be switched "ON" to monitor for function activation, "HO" for indefinite hold open function, or "OFF" which shall deactivate all control functions but will allow standard door operation by means of the internal mechanical closer.
G. Operators shall have push and go function to activate power operator or power assist functions.
H. Operator units shall have door closer assembly with adjustable spring size, backcheck valve, sweep valve, latch valve, speed control valve, and pressure adjustment valve to control door closing.
I. Operator units shall have inputs for smoke ventilation doors, which allow doors to power open upon fire alarm activation and hold open indefinitely or until fire alarm is reset.
J. Operator units shall have a presence detector input to prevent a closed door from opening or a door that is fully opened from closing.
K. Operator units shall have a hold open toggle input to allow remote activation for indefinite hold open; door shall close the second time the input is activated.
L. Operator units shall have vestibule inputs to allow sequencing operation of two units.
M. Operators shall have a SPDT relay for interfacing with latching or locking devices.

SARGENT MPower 4000
Low Energy Door Operator
How to Order

SARGENT
1-800-727-5477
www.sargentlock.com

How To Order

Specify	Note	Example
Quantity	Number Ordered	**1 Qty.**
Prefix	Low Ceiling or Handed Units Only	1 Qty. **CL-**
Product Series	MPower 40	1 Qty. CL-**40**
Application	See Types of Applications	1 Qty. CL-40**60**
Hand	Required for CL - Prefix and 67 Application	1 Qty. CL-4060 **R**
Finish	See Finishes	1 Qty. CL-4060 R **EN**
Additional Information	Item/Heading Number x Door number	1 Qty. CL-4060 R EN **x Item 01 x DR201**

Types of Applications

HINGE (PULL) SIDE OF DOOR
60 – Rigid Arm & Slide Track 110° Maximum Door Swing Maximum Reveal 1/8" (3mm)
67 – Double Egress Arm & Slide Track 110° Maximum Door Swing for Reveals 1/8" to 3" (3 to 76mm)
(Specify hand when ordering)

STOP (PUSH) SIDE OF DOOR
51 – Standard Duty Double Lever Arm 110° Maximum Door Swing Reveals 2-3/4" to 6-7/8" (70 to 175mm)
52 - Standard Duty Double Lever Arm 180° Maximum Door Swing Reveals 2-3/4" to 6-7/8" (70 to 175mm)

FINISHES

Product will be sprayed with a combination of waterborne acrylic and polyester powder coat.
Closers will withstand 100 hours of salt spray.

EN	689	Sprayed aluminum
EB	690	Sprayed bronze to match 10B
EAB	696	Sprayed brass

Note: Door switches and sensors are not included with operator. These items must be ordered separately.

SARGENT Manufacturing Company • 100 Sargent Drive • P.O. Box 9725 • New Haven • CT 06536-0915
Phone: 800-727-5477 • Fax: 888-863-5054 • Web site: www.sargentlock.com
SARGENT of Canada • Phone: 905-940-2040 • Fax: 905-940-3242 • Web site: www.sargentcanada.ca

Founded in 1864, SARGENT® is a market leader in locksets, cylinders, door closers, exit devices, electro-mechanical products and access control systems for new construction, renovation and replacement applications. The company's customer base includes commercial construction, institutional and industrial markets.

The ASSA ABLOY Group is the world's leading manufacturer and supplier of locking solutions, dedicated to satisfying end-user needs for security, safety and convenience.