SARGENT®

80 Series
Exit Devices

An ASSA ABLOY Group company

ASSA ABLOY

SARGENT
1-800-727-5477
www.sargentlock.com

Table of Contents

	Page
Features	1
UL Fire Door Ratings and Opening Sizes	2
8300, 12-8300 Narrow Design Mortise	3
8400, 12-MD8400 Narrow Design Concealed Vertical Rod	4
8500 Narrow Design Rim	5
MD8600, 12-MD8600 Metal Door Concealed Vertical Rod	6
WD8600, 12-WD8600 Wood Door Concealed Vertical Rod	7
LP8600/LR8600, 12-LP8600/12-LR8600 Low Profile Center and Top Latch, Pair of Doors	8
LS8600, 12-LS8600 Low Profile Center and Top Latch, Single Doors	9
PP8600/PR8600, 12-PP8600/12-PR8600 Concealed Center and Top Latch, Pair of Doors	10
SP8600, 12-SP8600 Concealed Center and Top Latch, Single Doors	11
PP8700/PR8700, 12-PP8700/12-PR8700 Center and Top Latch, Pair of Doors	12
SP8700, 12-SP8700 Center and Top Latch, Single Door	13
8700, 12-8700 Surface Vertical Rod	14
HC8700, 12-HC8700 Hurricane Code Surface Vertical Rod	15
NB8700, 12-NB8700 Top Latch Surface Vertical Rod	16
8800, 12-8800 Rim	17
HC8800, 12-HC8800 Hurricane Code Rim	18
8888, 12-8888 Reversible Rim	19
8900, 12-8900 Mortise	20
Trim Designs	21-23
Anti-Vandal Trim and 988 Surface Bolt	24
Freewheeling Trim Designs	25
Mechanical Functions	26-27
Electrical Functions	28
Accessories–Dummy Rails, Auxiliary Controls, Alternate Strikes	29
Accessories–Mullions	30
Accessories–Thru-bolts, Shim Kits, Rod Extensions	31
Cylinder Information and Coordinators	32
Options, Rail Sizes	33
Suggested Architectural Specifications	34
How to Order, Finishes	35
Guide for Proper Care of Finishes	36

On The Cover

- 8800 Series Rim Exit Device

80 Series Exit Devices
Features

SARGENT
1-800-727-5477
www.sargentlock.com

SARGENT manufactures a full line of exit devices that includes vertical rod, rim and mortise devices for both standard and narrow stile doors. They provide the best combination of Simplicity, Strength, Durability, Aesthetics and Innovation and are perfect for applications in commercial office buildings, medical and educational institutions.

Simplicity

- Easy installation!
- Maintenance free design
- Few moving parts – less wear, less maintenance
- Modular construction
- No need to remove device from door for maintenance or keying

Aesthetics

- Clean, simple, aesthetically pleasing design
- "True" architectural hardware finishes consistent with BHMA/ANSI standards
- *Coastal Series* decorative lever trim available

Security

- Double cylinder functions available
- Torx® and spanner screws
- Anti-vandal trim options
- Master keying with SARGENT Security key systems available (V-10, Signature, Keso, XC)

Strength & Durability

- Made of finest component materials
- Heavy duty mounting construction
- Built to withstand abusive conditions
- Available options to meet Dade County Protocols and other local hurricane code requirements for high wind load and missile impact*
- 5 Year warranty

* Consult factory

Innovation

- Broad offering of electro-mechanical solutions for the most demanding access/egress control applications
- **SARGuard**™ anti-microbial finish coating offers a new level of protection
- **SARGuide**™ exit device contains an illuminated touchpad to enhance the visibility of exit locations in dark or smoke-filled passages and effectively improve the safety of any public building
- CTL (Center and Top Latching) Vertical Rod Devices offer less bottom rod convenience with true center latching for added security

SARGuard™ Patent Pending

SARGuard Coating

- New finish coating available on all SARGENT product lines, utilizes a silver-based antimicrobial compound from AgION™ Technologies
- As an integral part of the finish coating, SARGuard lasts for the life of the hardware
- SARGuard coating permanently suppresses the growth of bacteria, algae, fungus, mold and mildew. It is effective against a broad spectrum of bacteria
- Non-toxic and completely safe. The AgION antimicrobial compound is EPA and NSF approved and FDA listed for use in medical and food preparation equipment
- Applications: Anywhere there is need for a clean environment (hospitals, laboratories, schools, medical centers, daycare, food processing etc.)

AgION

The AgION antimicrobial is not intended as a substitute for good hygiene. Coated products must still be cleaned to insure the surfaces will be free of destructive microbes. SARGENT makes no representations or warranties, express or implied, as to the efficacy of the AgION antimicrobial. A copy of the AgION warranty is available upon request.

SARGuide

- The SARGuide illuminated exit device increases visibility of exit locations in dark or smoke-filled passages, supplementing existing codes for egress lighting
- SARGuide utilizes state-of-the-art FLATLITE electroluminescent lighting from E-Lite Technologies Inc.
- Green-blue electroluminescent light provides 3 to 5 times the visibility of other lights
- Can be wired for continuous operation or activation by fire alarm system
- Exit devices are placed low enough on a door to provide an extended window of opportunity for safe emergency egress
- Supplements building exit signs required by code
- Intuitive operation. Integral "EXIT" signage guides users directly to the means of egress
- UL Listed for use on panic (UL 305) and fire-rated (UL10C) exit devices
- Available with mechanical, and many electro-mechanical, exit devices
- Can be ordered by adding TL prefix to most 80 Series devices

E-LUME-A-PATH

SARGuide can be used as a stand alone feature or as an integral part of E-Lume-A Path™ Egress Path Marketing Systems. E-Lume-A-Path enhances the ability of a person to escape a building by illuminating the path to safety through existing exits. The system will respond to a power outage or fire alarm signal and consists of a strip of FLATLITE® electro-luminescent lamp at the floor level that can go down hallways, around corners and stairwells, hundreds of feet in length. It can help supplement currently required Egress equipment such as Exit Signs and Emergency Lights, which may have limited effectiveness when building occupants do not know the location of secondary exits.

Please see Product Systems Manual for more information

80 Series Exit Devices
UL Fire Door Ratings and Openings Sizes

SARGENT
1-800-727-5477
www.sargentlock.com

Maximum Door Opening-Fire Doors

Application	Type of Device	Series Device	Maximum Door Opening	UL Fire Door Hardware Rating (A) 3 Hour	(B) 1-1/2 Hour	(C) 3/4 Hour	(D) 1-1/2 Hour	(E) 3/4 Hour
Single Doors	Mortise	12-8300 12-8900	4'0" x 10'0" (1219 x 3048)	♦	♦	♦	♦	♦
	Rim	12-8800	4'0" x 8'0" (1219 x 2438)	♦	♦	♦	♦	♦
	Low Profile	12-LS8600	4'0" x 10'0" (1219 x 3048)	♦	♦	♦	♦	♦
	Center and Top Latch	▲ ■ 12-SP8600 ▲ ■ 12-SP8700	4'0" x 10'0" Hollow Metal (1219 x 3048) 4'0" x 9'0" Wood Door (1219 x 2743)		♦	♦	♦	♦
	Surface Vertical Rod LBR	▲12-NB8700	4'0" x 10'0" Hollow Metal (1219 x 3048) 4'0" x 9'0" Wood Door (1219 x 2743)		♦	♦	♦	♦
Pair of Doors swinging in the same direction	Mortise and Surface Vertical Rod	12-8900 x 12-8700	8'0" x 8'0" (2438 x 2438)	♦	♦	♦	♦	♦
	Mortise and Concealed Vertical Rod	+12-8300 x 12-MD8400 +12-8900 x 12-MD8600	8'0" x 10'0" (2438 x 3048)	♦	♦	♦	♦	♦
		+*12-8900 x 12-WD8600	8'0" x 9'0" (1219 x 2743)		♦	♦	♦	♦
	Two Rim With Mullion	12-8800 x 12-8800	8'0" x 8'0" (2438 x 2438)	♦	♦	♦	♦	♦
	Two Surface Vertical Rods	12-8700 x 12-8700	8'0" x 8'0" (2438 x 2438)		♦	♦	♦	♦
	Low Profile	12-LP8600 x 12-LR8600	8'0" x 10'0" (2438 x 3048)		♦	♦	♦	♦
	Two Concealed Vertical Rods No Astragal	12-MD8400 x 12-MD8400 12-MD8600 x 12-MD8600	8'0" x 10'0" (2438 x 3048)		♦	♦	♦	♦
		12-WD8600 x 12-WD8600	8'0" x 9'0" (2438 x 2743)		♦	♦	♦	♦
	Center and Top Latch No Astragal	▲ ■ 12-PR8700 x 12-PP8700 ■ 12-PR8600 x 12-PP8600	8'0" x 10'0" Hollow Metal (2438 x 3048) 8'0" x 8'0" Wood Door (2438 x 2438)		♦ ♦	♦ ♦	♦ ♦	♦ ♦
	Surface Vertical Rod LBR	▲12-NB8700	8'0" x 10'0" Hollow Metal (2438 x 3048) 8'0" x 9'0" Wood Door (2438 x 2743)		♦	♦	♦	♦
Double Egress Pair of Doors swinging in opposite directions	Two Surface Vertical Rods	12-8700 x 12-8700	8'0" x 8'0" (2438 x 2438)	♦	♦	♦	♦	♦
	Low Profile	12-LP8600 x 12-LR8600	8'0" x 10'0" (2438 x 3048)	♦	♦	♦	♦	♦
	Two Concealed Vertical Rods	12-MD8400 x 12-MD8400 12-MD8600 x 12-MD8600	8'0" x 10'0" (2438 x 3048)	♦	♦	♦	♦	♦
		*12-WD8600 x 12-WD8600	8'0" x 9'0" (2438 x 2743)		♦	♦	♦	♦
	Center and Top Latch	▲■ 12-PR8700 x 12-PP8700 ■ 12-PR8600 x 12-PP8600	8'0" x 10'0" Hollow Metal (2438 x 3048) 8'0" x 8'0" Wood Door (2438 x 2438)		♦	♦	♦	♦
	Surface Vertical Rod LBR	▲12-NB8700	8'0" x 10'0" Hollow Metal (2438 x 3048) 8'0" x 8'0" Wood Door (2438 x 2438)		♦	♦	♦	♦

\+ **IMPORTANT: Trim mounting height varies; consult templates.**

♦ Available

■ Wood or composite door UL rated up to 20 minutes for pairs without thermal pin.

▲ Wood or composite door Warnock Hersey listed up to 90 minutes with thermal pin.

* Each 12-WD8600 Series device must be used in conjunction with a full height metal edge, with a minimum 5" (127mm) overlap. Used in pairs, each door leaf must have a metal edge.

Note: Limited for fire doors listed by UL for this use. Doors swinging in same direction cannot use two vertical rod exit devices on a pair of doors with an overlapping astragal. Doors rated greater than 1-1/2 hours require steel overlapping astragal.

80 Series Exit Devices
8300, 12-8300 Narrow Design
Mortise Lock Exit Device

SARGENT
1-800-727-5477
www.sargentlock.com

Features

- Designed for standard width stile applications
- Thru-bolted mortise lock for quiet operation and security
- Single and double door applications
- UL Fire and Panic listed

Double Door

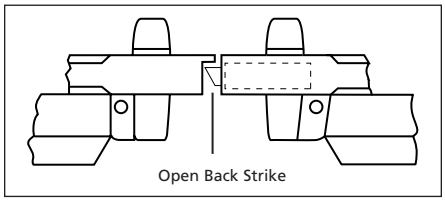

Single Door

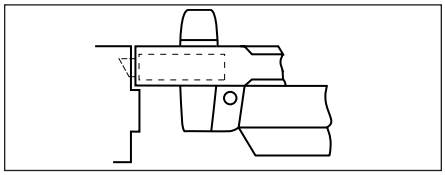

C908 Standard Strike

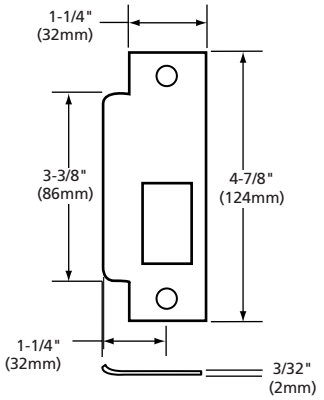

- Curved lip ANSI A-115.1
- Handed, 1-1/4" (32mm) lip standard
- Longer lips in increments of 1/4" (6mm) through 2-3/4" (70mm) available
- Black nylon coated

815 Open Back Strike

- ANSI A-115.14 open back
- Beveled 1/8" (3mm) in 2" (51mm)
- Specify hand of active door
- Black nylon coat
- "B" label

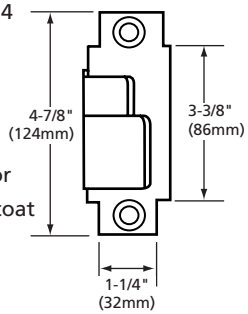

Specifications

For Doors	Wood or hollow metal. 1-3/4" (44mm) thick standard Available on order for doors up to 2-1/4" (70mm) Minimum stile requirement 4-1/2" (114mm)
Mounting	Supplied standard with wood and machine screws. Available on order with thru-bolts and mortise nuts
Chassis Cover	Nonferrous alloy
Chassis	Nonferrous alloy
Hand	Handed. Specify RHRB or LHRB
Dogging Feature Non 12- only	Allen-type dogging furnished standard. Available with cylinder dogging (16-prefix)
Mortise Lock	900 Series. See below
Strike	C908 standard
Cylinder	Brass, 6 pin standard. Outside cylinder 41 mortise. Packed with trim
Fire Exit Hardware	See chart page 2
Trim	See Trim Designs section
Electric Functions	See Product Systems Manual

900 Series Mortise Lock

Fits door prepared for ANSI Standard A115.1	
For Doors	1-3/4" (44mm) to 2-1/4" (57mm) thick
Latchbolt	Brass, 3/4" (19mm) throw, anti-friction center
Guardbolt	Brass, sliding type
Front	Brass, beveled 1/8"(3mm) in 2" (51mm). Flat front available on order
Handed	Non reversible. Specify hand when ordering

80 Series Exit Devices
8400, 12-MD8400 Narrow Design Concealed Vertical Rod Exit Device

SARGENT
1-800-727-5477
www.sargentlock.com

Features

- Designed for narrow stile applications such as full glass doors
- Concealed rods for security and aesthetics
- UL Fire and Panic listed

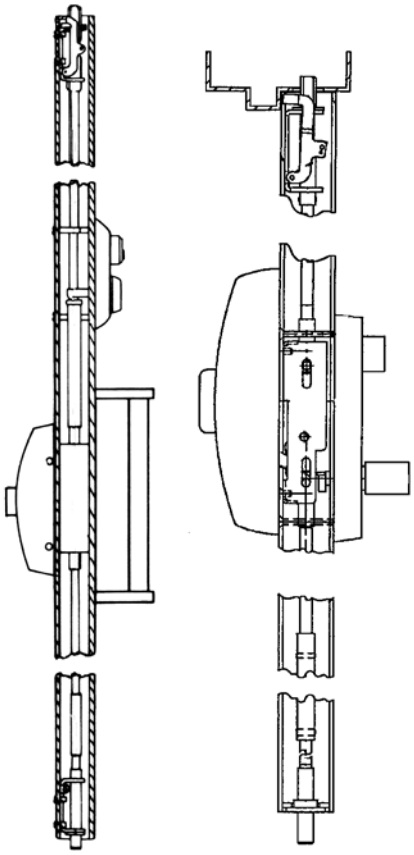

8400 12-MD8400

Specifications

For Doors	Hollow metal or extruded aluminum. 1-3/4" (44mm) minimum thickness. 1-3/4" (44mm) minimum stile width required. Stile must be hollow with inside dimension of at least 1-3/8" (35mm) square
Mounting	Supplied standard with machine screws
Chassis Cover	Nonferrous alloy
Chassis	Nonferrous alloy
Hand	Handed. Specify RHRB or LHRB
Dogging Feature Non 12- only	Allen-type dogging furnished standard. Available with cylinder dogging (16- prefix)
Top and Bottom Bolts	Stainless steel. Top and bottom bolt travel 7/16" (11mm) Projection adjustable up to 1" (25mm)
Strikes	650 top and bottom strikes (8400) 650 top strike and 606 bottom strike standard (12-)
Fire Exit Hardware	See chart page 2
Trim	See Trim Designs section
Electric Functions	See Product Systems Manual
Rail Height	Specify door opening and mounting height of center line of rail when ordering any vertical rod exit device
Opening Height	96" (2438mm) Standard

650 Strike

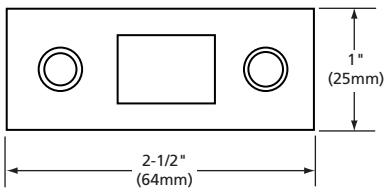

- For application in metal frames, wood floors or thresholds
- Stainless steel
- Top and bottom strike with 8400
- Top strike for 12-MD8400

606 Strike

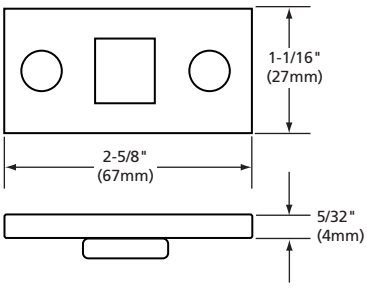

- Furnished with expansion shields
- Mortised into floor
- Stainless steel
- Bottom strike for 12-MD8400

80 Series Exit Devices
8500 Narrow Design
Rim Exit Device

SARGENT
1-800-727-5477
www.sargentlock.com

Features

- Designed for narrow stile applications such as aluminum frame full glass doors
- Rim bolt for quiet operation and security
- UL Panic listed

Specifications

For Doors	Wood, hollow metal or extruded aluminum. 1-3/4" (44mm) minimum thickness. 1-3/4" (44mm) minimum stile width required
Mounting	Supplied standard with wood and machine screws. Available on order with thru-bolts and mortise nuts
Chassis Cover	Nonferrous alloy
Chassis	Nonferrous alloy
Hand	Handed. Specify RHRB or LHRB
Dogging Feature	Allen-type dogging furnished standard. Available with cylinder dogging (16-prefix)
Latchbolt	Stainless steel, 3/4" (19mm) throw
Strike	657 standard; Alternate strikes 658 and 641
Cylinder	Brass 6 pin standard. 34 rim cylinder. Cylinder adapter required, packed with trim. All others – consult factory
Mullion	650A prepped with 658 strikes. Aluminum; US28 finish
Fire Exit Hardware	Not available
Electric Functions	See Product Systems Manual

Double Door 8500 x 650A Mullion

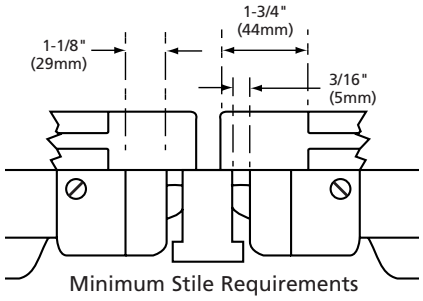

Minimum Stile Requirements

Standard 657 Strike

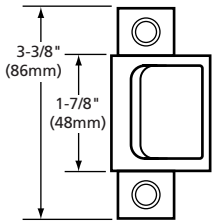

- Surface applied or mortised
- For use on frames with blade stop or integral stop
- Black nylon coated

658 Strike

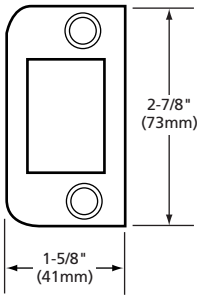

- Packed standard with 650A mullion
- Can be ordered separately for surface application to frames
- Black nylon coated

80 Series Exit Devices
MD8600, 12-MD8600
Concealed Vertical Rod Exit Device for Metal Doors

SARGENT
1-800-727-5477
www.sargentlock.com

Features

- Designed for standard width stile applications on hollow metal and aluminum doors
- Concealed rods for security and aesthetics
- Single and double door applications
- UL Fire and Panic listed

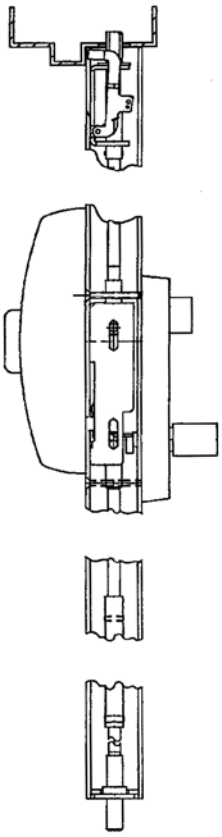

Specifications

For Doors	Hollow metal or aluminum. 1-3/4" (44mm) minimum thickness. 4-1/2" (114mm) minimum stile width
Mounting	Supplied with machine screws
Chassis Cover	Cold drawn brass, bronze or stainless steel
Chassis	Nonferrous alloy
Hand	Field reversible
Dogging Feature Non 12- only	Allen-type dogging furnished standard. Available with cylinder dogging (16- prefix)
Top and Bottom Bolts	Stainless steel. Top and bottom bolt travel 7/16" (11mm). Projection adjustable up to 1" (25mm)
Fire Exit Hardware	See chart page 2
Trim	See Trim Designs section
Strikes	650 top and 606 bottom standard
Electric Functions	See Product Systems Manual
Rail Height	Specify door opening and mounting height of center line of rail when ordering any vertical rod exit device
Opening Height	96" (2438mm) Standard

650 Top Strike

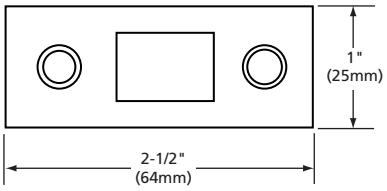

- For application in hollow metal frames
- Stainless steel

606 Bottom Strike

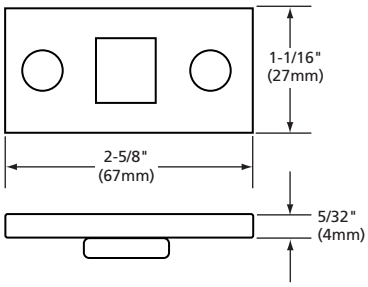

- Furnished with expansion shields
- Mortised into floor
- Stainless steel

80 Series Exit Devices
WD8600, 12-WD8600 Concealed Vertical Rod Exit Device for Wood Doors

SARGENT
1-800-727-5477
www.sargentlock.com

Features

- Designed for standard width stile applications on wood doors
- Concealed rods for security and aesthetics
- Single and double door applications
- UL Fire and Panic listed

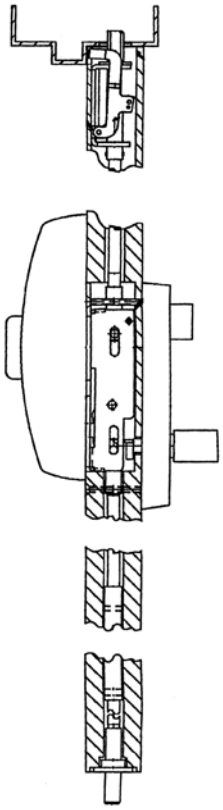

Specifications

For Doors	Wood. 1-3/4" (44mm) minimum thickness 4-1/2" (114mm) minimum stile width
Mounting	Supplied with wood screws
Chassis Cover	Cold drawn brass, bronze or stainless steel
Chassis	Nonferrous alloy
Hand	Field reversible
Dogging Feature Non 12- only	Allen-type dogging furnished standard. Available with cylinder dogging (16-prefix)
Top and Bottom Bolts	Stainless steel. Top and bottom bolt travel 7/16" (11mm) Projection adjustable up to 1" (25mm)
Fire Exit Hardware	See chart page 2
Trim	See Trim Designs section
Strikes	650 top and 606 bottom standard
Electric Functions	See Product Systems Manual
Rail Height	Specify door opening and mounting height of center line of rail when ordering any vertical rod exit device
Opening Height	96" (2438mm) Standard

650 Top Strike

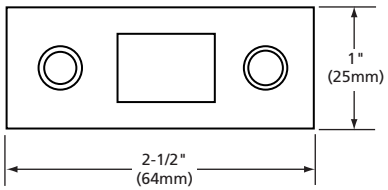

- For application in hollow metal frames
- Stainless steel

606 Bottom Strike

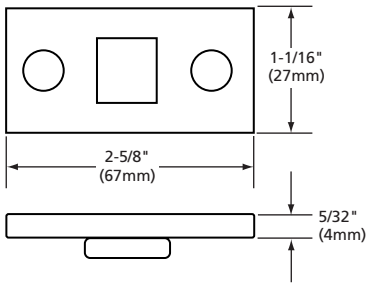

- Furnished with expansion shields
- Mortised into floor
- Stainless steel

80 Series Exit Devices
LP8600/LR8600, 12-LP8600/12-LR8600
Low Profile Center & Top Latch Concealed Vertical Rods for Pair of Doors & Double Egress

SARGENT
1-800-727-5477
www.sargentlock.com

Features

- 1-1/2" total projection from face of door
- Center and Top Latching
- No visible active chassis
- Center Latchbolt adjustable for up to 1/2" (13mm) door gap
- Coordinators and open back strike not required
- Latchbolt adjustable to allow for 1/8" (3mm) - 1/2" (13mm) door gap centerline of bevel
- Top case latchbolt projection adjustable through top case
- Tripping potential removed - no bottom strike
- Eliminates marred floors due to dragging bottom bolts
- All functions determined by outside trim (ET Trim only)
- Concealed rods for security and asthetics

Double Egress Application

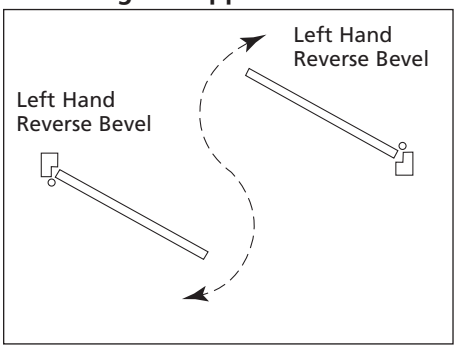

Pair of Doors

* Notes:

1. Available for 1-3/4" (44mm) thick doors only. No glass bead shim kits or inside panel condition permitted.
2. LP/LR/LS8600 are available in the following door sizes only: 36", 42", 44", 46" or 48" (914mm, 1067mm, 1118mm), 1168mm or 1219mm)

Specifications

LP8600	Pairs of Doors or Double Egress applications. Latchbolt of mortise center case projects into other door. Works with LR8600 as a pair
LR8600	Pairs of Doors or Double Egress applications. Latchbolt recessed into mortise case and pushes projected latchbolt out of the way for egress purposes. Works with LP8600 as a pair
*For Doors	Metal doors only. **1-3/4" (44mm) thick only** with 2-3/4" (70mm) backset. Minimum stile requirement 4-1/2" (114mm)
Mounting	Supplied standard for metal doors. Available on order with thru-bolts and mortise nuts.
Hand	Non Handed
Dogging Feature Non 12- only	Allen-type dogging furnished standard. Available with cylinder dogging (16- prefix)
Top Bolt	Stainless steel. 7/16" (11mm). Projection adjustable up to 1" (25mm)
Top Strike	650
Mortise Strike	Double lipped mortise strike. Available in stainless steel only. Standard for LR8600
Fire Exit Hardware	See chart page 2
Trim	Available in ET Trim only for 06, 13, 15, 40, 43, 46, 73, 74 functions Available in any trim for 10 function
Functions	Determined by trim: 06, 10, 13, 15, 40, 43, 46, 73, 74
Electric Functions	See Product Systems Manual

Side View

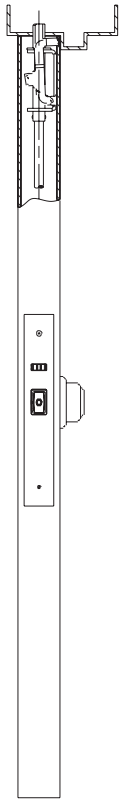

650 Top Strike

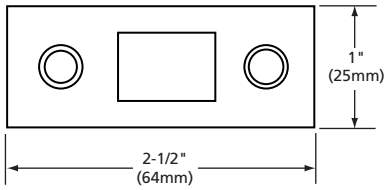

- For application to metal frames
- Stainless steel

68-1183 Double Lipped Mortise Strike

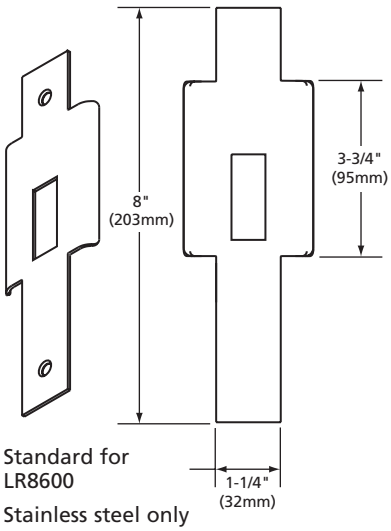

- Standard for LR8600
- Stainless steel only

80 Series Exit Devices
LS8600, 12-LS8600 Low Profile Center & Top Latch Concealed Vertical Rods for Single Door Application

SARGENT
1-800-727-5477
www.sargentlock.com

Features

- 1-1/2" (38mm) total projection from face of door
- Center and Top Latching
- No visible active chassis
- Center Latchbolt adjustable for up to 1/2" (13mm) door gap
- Tripping potential removed - no bottom strike
- Eliminates marred floors due to dragging bottom bolts
- Top case latchbolt projection adjustable through top case
- All functions determined by outside trim (ET Trim only)

LS8613 Side View

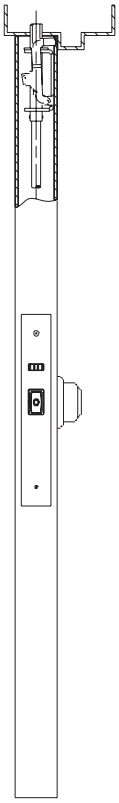

* Notes:

1. Available for 1-3/4" (44mm) thick doors only. No glass bead shim kits or inside panel condition permitted.
2. LS/LP/LR8600 are available in the following door sizes only: 36", 42", 44", 46" or 48" (914mm, 1067mm, 1118mm, 1168mm or 1219mm)

Specifications

LS8600	Single Door application. Latchbolt of mortise center case projects into the frame
*For Doors	Metal doors only. **1-3/4" (44mm) thick only** with 2-3/4" (70mm) backset. Minimum stile requirement 4-1/2" (114mm)
Mounting	Supplied standard for metal doors. Available on order with thru-bolts and mortise nuts.
Hand	Non Handed
Dogging Feature Non 12- only	Allen-type dogging furnished standard. Available with cylinder dogging (16- prefix)
Top Bolt	Stainless steel. 7/16" (11mm). Projection adjustable up to 1" (25mm)
Top Strike	650
Mortise Strike	Single lipped mortise strike. Available in stainless steel only
Fire Exit Hardware	See chart page 2
Trim	Available in ET Trim only for 06, 13, 15, 40, 43, 46, 73, 74 functions. Available in any trim for 10 function
Functions	Determined by trim: 06, 10, 13, 15, 40, 43, 46, 73, 74
Electric Functions	See Product Systems Manual

Single Door Application

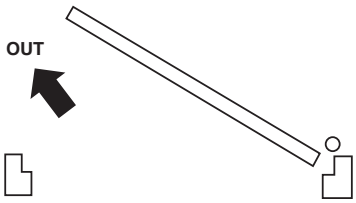

650 Top Strike

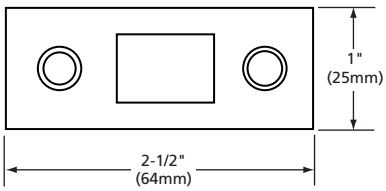

- For application to metal frames
- Stainless steel

C7710 Mortise Centercase Strike

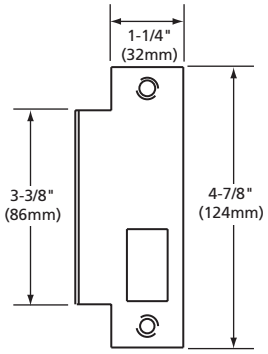

- Standard for LS8600
- Handed
- Stainless steel only

80 Series Exit Devices
PP8600/PR8600, 12-PP8600/12-PR8600
Center & Top Latch Concealed Vertical Rods for Pair of Doors & Double Egress

SARGENT
1-800-727-5477
www.sargentlock.com

Features

- Center latching mechanism
- Mortise center case requires only two screws for door attachment - reduced installation time
- Coordinators and open back strike not required
- Latchbolt adjustable to allow for 1/8" (3mm) - 1/2" (13mm) door gap centerline of bevel
- Top case latchbolt projection adjustable through center case
- Allows free access for wheel chairs and carts
- Tripping potential removed - no bottom strike
- Eliminates marred floors due to dragging bottom bolts
- All functions determined by outside trim (ET Trim only)
- Concealed rods for security and asthetics
- Patented design – U.S. Patent No. 6,174,004

Specifications

PP8600	Pairs of Doors or Double Egress applications. Latchbolt of mortise center case projects into other door. Works with PR8600 as a pair
PR8600	Pairs of Doors or Double Egress applications. Latchbolt recessed into mortise case and pushes projected latchbolt out of the way for egress purposes. Works with PP8600 as a pair
*For Doors	Wood (584K Kit) or metal. **1-3/4" (44mm) thick only** with 2-3/4" (70mm) backset. Minimum stile requirement 4-1/2" (114mm)
Mounting	Supplied standard for metal doors. Available on order with thru-bolts and mortise nuts. Wood doors require 584K Kit
Chassis Cover	Cold drawn brass, bronze or stainless steel
Chassis	Nonferrous alloy
Hand	Reversible
Dogging Feature Non 12- only	Allen-type dogging furnished standard. Available with cylinder dogging (16- prefix)
Top Strike	650
Mortise Strike	Double lipped mortise strike. Available in stainless steel only. Standard for PR8600
Fire Exit Hardware	See chart page 2
Trim	Available in ET Trim only for 06, 13, 15, 40, 43, 46, 73, 74 functions Available in any trim for 10 function
Functions	Determined by trim: 06, 10, 13, 15, 40, 43, 46, 73, 74
Electric Functions	See Product Systems Manual

Double Egress Application

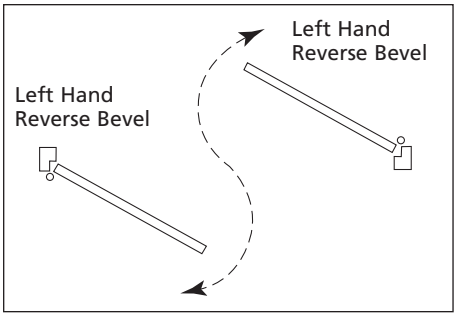

Pair Of Doors Application

NOTE: Available for 1-3/4" (44mm) thick doors only. No glass bead shim kits or inside panel condition permitted.

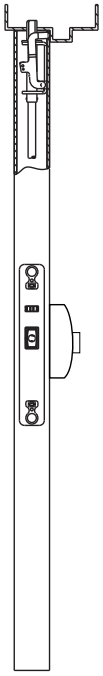

*584K Wood Door Kit

- **Must be ordered separately for all wood door applications**

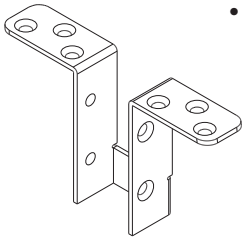

- The 584K Wood Door Kit enables the standard PP/PR/SP8600 to be mounted in a wood door using supplied hardware

650 Top Strike

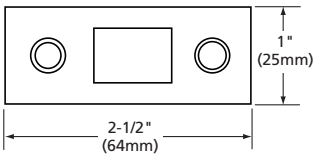

- For application to metal frames
- Stainless steel

68-1183 Double Lipped Mortise Strike

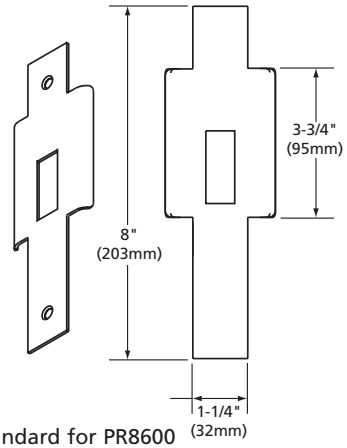

- Standard for PR8600
- Stainless steel only

80 Series Exit Devices
SP8600, 12-SP8600
Center & Top Latch Concealed Vertical Rods for Single Door Application

SARGENT
1-800-727-5477
www.sargentlock.com

Features

- Center latching mechanism
- Mortise center case requires only two screws for door attachment reducing installation time
- Latchbolt adjustable to allow for 1/8" (3mm) - 1/2" (13mm) door gap centerline of bevel
- Allows free access for wheel chairs and carts
- Tripping potential removed - no bottom strike
- Eliminates marred floors due to dragging bottom bolts
- Top case latchbolt projection adjustable through center case
- All functions determined by outside trim
- Patented design - U.S. Patent No. 6,174,004

Specifications

SP8600	Single Door application. Latchbolt of mortise center case projects into the frame
*For Doors	Wood (584K Kit) or metal. **1-3/4" (44mm) thick only** with 2-3/4" (70mm) backset. Minimum stile requirement 4-1/2" (114mm)
Mounting	Supplied standard for metal doors. Available on order with thru-bolts and mortise nuts. Wood doors require 584K Kit
Chassis Cover	Cold drawn brass, bronze or stainless steel
Chassis	Nonferrous alloy
Hand	Handed. Specify LHRB or RHRB
Dogging Feature Non 12- only	Allen-type dogging furnished standard. Available with cylinder dogging (16- prefix)
Top Strike	650
Mortise Strike	Single lipped mortise strike. Available in stainless steel only
Fire Exit Hardware	See chart page 2
Trim	Available in ET Trim only for 06, 13, 15, 40, 43, 46, 73, 74 functions. Available in any trim for 10 function
Functions	Determined by trim: 06, 10, 13, 15, 40, 43, 46, 73, 74
Electric Functions	See Product Systems Manual

Single Door Application

SP8610 Side View

*584K Wood Door Kit

- **Must be ordered separately for all wood door applications**

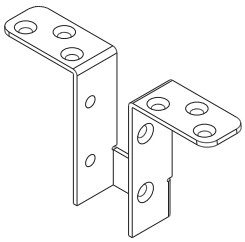

- The 584K Wood Door Kit enables the standard PP/PR/SP8600 to be mounted in a wood door using supplied hardware

650 Top Strike

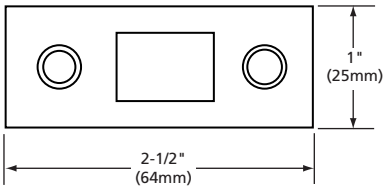

- For application to metal frames
- Stainless steel

C7710 Mortise Centercase Strike

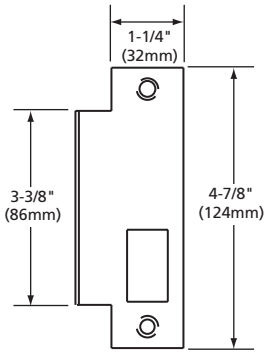

- Standard for SP8600
- Handed
- Stainless steel only

Note: Available for 1-3/4" (44mm) thick doors only. No glass bead shim kits or inside panel condition permitted

80 Series Exit Devices
PP8700/PR8700, 12-PP8700/12-PR8700
Center & Top Latch Surface Vertical Rods for Pair of Doors

SARGENT
1-800-727-5477
www.sargentlock.com

Features

- Center latching mechanism
- Latchbolt adjustable to allow for 1/8" (3mm) - 1/2" (13mm) door gap center line of bevel
- Allows free access for wheelchairs and carts
- Tripping potential removed - no bottom strike
- Eliminates marred floors due to dragging bottom bolts
- Mortise center case requires only two screws for door attachment reducing installation time
- Coordinators and open back strike not required
- Top case latchbolt projection adjustable through center case
- All functions determined by outside trim (ET Trim only, except dummy trim)
- Patented design - U.S. Patent No. 6,120,071

Pair of Doors Application

Note: Available for 1-3/4" (44mm) thick doors only. No glass bead shim kits or inside panel condition permitted.

Double Egress Application

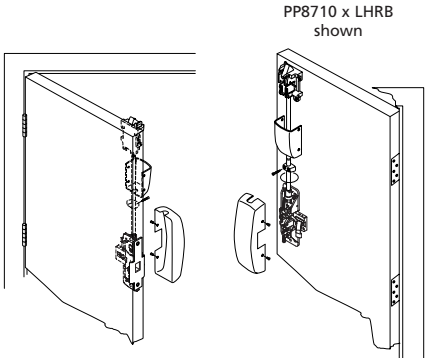

Specifications

PP8700	Pairs of Doors or Double Egress applications. Latchbolt of mortise center case projects into other door. Works with PR8700 as a pair
PR8700	Pairs of Doors or Double Egress applications. Latchbolt recessed into mortise case and pushes projected latchbolt out of the way for egress purposes. Works with PP8700 as a pair
*For Doors	Wood or metal. **1-3/4" (44mm) thick only** with 2-3/4" (70mm) backset. Minimum stile requirement 4-1/2" (114mm). Narrow stile not available
Mounting	Supplied standard with wood and machine screws. Available on order with thru-bolts and mortise nuts
Chassis Cover	Cold drawn brass, bronze or stainless steel
Chassis	Nonferrous alloy
Hand	Handed Specify LHRB or RHRB
Dogging Feature Non 12- only	Allen-type dogging furnished standard. Available with cylinder dogging (16- prefix)
Top Strike	646
Mortise Strike	Double lipped mortise strike. Available in stainless steel only. Standard for PR8700
Fire Exit Hardware	See chart page 2
Trim	Available in ET Trim 700-8 series only for 06, 13, 15, 40, 43, 46, 73, 74 functions. Available in any trim for 10 function
Functions	Determined by trim: 06, 10, 13, 15, 40, 43, 46, 73, 74
Electric Functions	See Product Systems Manual
*Cannot use two (2) vertical rod exit devices on a pair of doors with an overlapping astragal.	

646 Top Strike

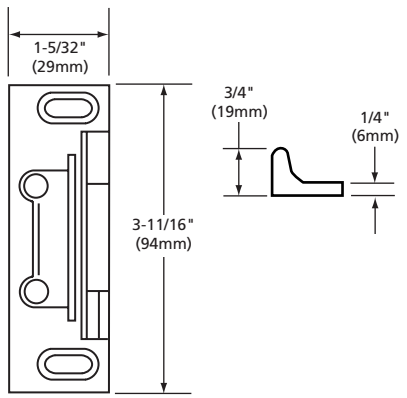

- Standard for PP8700 and PR8700
- Surface applied to frame
- Black nylon coated

68-1183 Double Lipped Mortise Strike

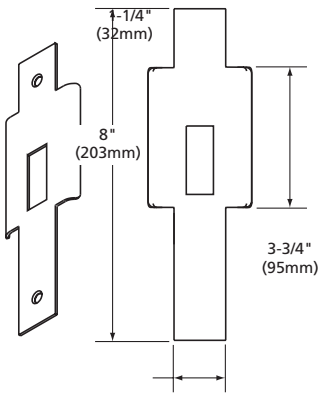

- Standard for PR8700
- Stainless steel only

80 Series Exit Devices
SP8700, 12-SP8700 Center & Top Latch Surface Vertical Rod for Single Door Application

SARGENT
1-800-727-5477
www.sargentlock.com

Features

- Center latching mechanism
- Latchbolt adjustable to allow for 1/8" (3mm) - 1/2" (13mm) door gap center line of bevel
- Allows free access for wheel chairs and carts
- Tripping potential removed - no bottom strike
- Eliminates marred floors due to dragging bottom bolts
- Mortise center case requires only two screws for door attachment reducing installation time
- Top case latchbolt projection adjustable through center case
- All functions determined by outside trim

Specifications

SP8700	Single Doors Latchbolt of mortise center case projects into the frame
*For Doors	Wood or metal. **1-3/4" (44mm) thick only** with 2-3/4" (70mm) backset. Minimum stile requirement 4-1/2" (114mm) Narrow stile not available
Mounting	Supplied standard with wood and machine screws. Available on order with thru-bolts and mortise nuts
Chassis Cover	Cold drawn brass, bronze or stainless steel
Chassis	Nonferrous alloy
Hand	Handed. Specify LHRB or RHRB
Dogging Feature Non 12- only	Allen-type dogging furnished standard. Available with cylinder dogging (16- prefix)
Top Strike	646
Fire Exit Hardware	See chart page 2
Trim	Available in 700-8 series ET Trim only for 06, 13, 15, 40, 43, 46, 73, 74 functions. Available in any trim for 10 function
Functions	Determined by trim: 06, 10, 13, 15, 40, 43, 46, 73, 74
Electric Functions	See Product Systems Manual

Single Door Application

* Note: Available for 1-3/4" (44mm) thick doors only. No glass bead shim kits or inside panel condition permitted.

SP8700 Side View

646 Top Strike

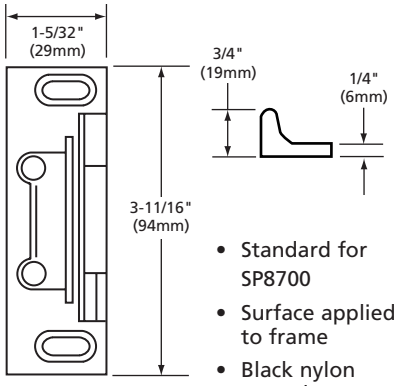

- Standard for SP8700
- Surface applied to frame
- Black nylon coated

C7710 Mortise Centercase Strike

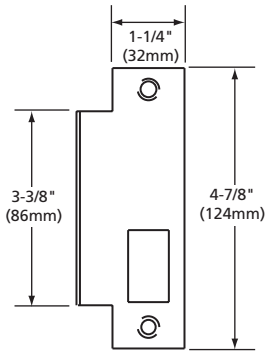

- Standard for SP8700
- Surface applied to frame
- Handed
- Stainless steel only

80 Series Exit Devices
8700, 12-8700 Surface Vertical Rod Exit Device

SARGENT
1-800-727-5477
www.sargentlock.com

Features

- Designed for standard width stile applications on metal and wood doors
- Top case latchbolt projection adjustable through center case
- Standard bottom latch compatible with latchtrack thresholds (by others)
- Single and double door applications
- UL Fire and Panic listed

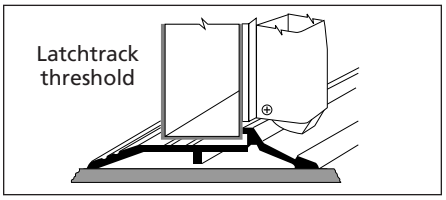

Specifications

For Doors	Wood or metal. 1-3/4" (44 mm) thick standard. Available on order for doors up to 2-1/4" (70mm) thick. 4-1/2" (114mm) minimum stile with trim and 3-1/2" (89mm) minimum stile without trim.
Mounting	Supplied standard with wood and machine screws Available on order with thru-bolts and mortise nuts
Chassis Cover	Cold drawn brass, bronze or stainless steel
Chassis	Nonferrous alloy
Hand	Handed. Specify RHRB or LHRB
Dogging Feature Non 12- only	Allen-type dogging furnished standard. Available with cylinder dogging (16-prefix)
Strikes	629 top and 624 bottom. 646 top and 655 bottom on 12-
Top and Bottom Bolts	Brass, stainless steel
Rods	1/2" (13mm) brass, bronze or stainless steel
Fire Exit Hardware	See chart page 2
Trim	See Trim Designs section
Electric Functions	See Product Systems Manual
Rail Height	Specify door opening and mounting height of center line of rail when ordering any vertical rod exit device
Opening Height	90" (2286mm) Standard 84" (2133mm) Standard for TurboShip

629 Top Strike

- Standard for 8700 and 14-8700
- Surface applied
- Black nylon coated

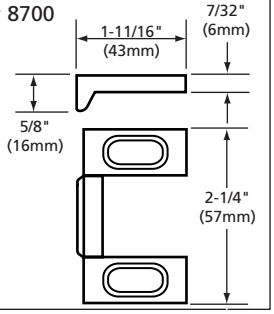

14- Prefix Sliding Bottom Bolt

647 Strike

- Sliding bolt in bottom case held retracted by latch retracting lever in top case
- Bottom bolt has 7/16" (11mm) travel
- Adjustable projection up to 3/4" (19mm)

624 Bottom Strike

- Standard for 8700
- Applied to surface of floor or to a flat threshold
- Black nylon coated

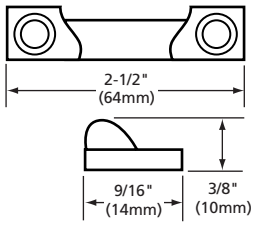

655 Bottom Strike

- Standard for 12-8700
- Stainless steel
- Black nylon coated

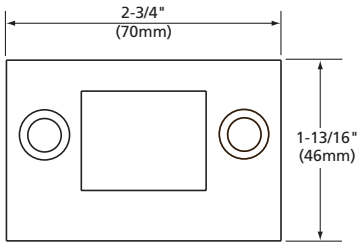

646 Top Strike

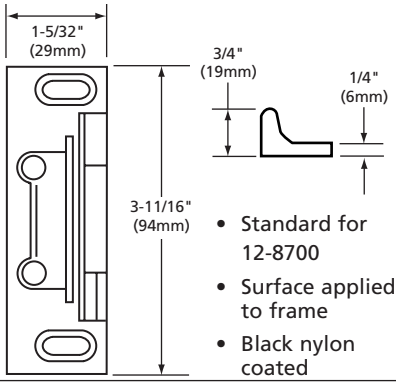

- Standard for 12-8700
- Surface applied to frame
- Black nylon coated

80 Series Exit Devices
HC8700/12-HC8700 Hurricane Code Surface Vertical Rod Exit Device

SARGENT
1-800-727-5477
www.sargentlock.com

The Hurricane Code Hardware has been accepted by Dade County, Florida. It meets the abuse and high wind loads required by South Florida building code. These exits are accepted and approved for use with CURRIES hollow metal doors and McKINNEY hinges. **Any substitution of hardware makes the Hurricane Code inapplicable.**

Specifications: Pairs of Doors, Dade County Acceptance #02,0924.04

For Doors	8'0" x 8'0" (2438mm x 2438mm) 16 gauge 747 flush, S edge
Frames	16 gauge KD, Pipe spacer anchors only, 12 gauge full sleeve reinforcing and existing opening anchor in head of frame
Hardware	MCKINNEY TA2714 or T2714, SARGENT HC8700 or 12-HC8700 Exit Devices on both leaves
Strikes	654 top bolt in frame with larger mounting screws for both top and bottom cases. 655 bottom strike furnished standard
Trim	ET trim available in the following functions: 06, 10, 13, 15, 40, 43, 46, 73, 74. Available in any trim for 10 function

Specifications: Pairs of Doors with 8200 Series Mortise Lock, Dade County Acceptance #02,0924.04

For Doors	8'0" x 8'0" (2438mm x 2438mm) 16 gauge 747 flush, S edge
Frames	16 gauge KD, Pipe spacer anchors only, 12 gauge full sleeve reinforcing and existing opening anchor in head of frame
Hardware	McKINNEY TA2714 or T2714, SARGENT 8200 Series mortise lock (active), SARGENT HC8700 or 12-HC8700 exit devices (inactive), Ives 360 surface bolts at 5 3/4" (147mm) at centerline
Strikes	654 top plate in frame with larger mounting screws for both top and bottom cases. 655 bottom strike furnished standard
Trim	ET trim available in the following functions: 06, 10, 13, 15 40, 43, 46, 73, 74. Available in any trim for 10 function
Note	The 8200 Series mortise lock is ordered as normal product, no additional hardware necessary

Restrictions:

- The above items are the maximum allowable conditions to which the hardware is approved
- The approved single openings cannot be used as a pair, but a leaf of a pair can be used as a single opening
- Weatherstrip/threshold used for testing and approved:
  Pemko S88 on head & jamb
  Pemko 2005AS as threshold
- The openings must be configured as described. There are no hardware substitutions permitted

HC Hurricane Code Mullions

- Designed for severe wind load conditions due to hurricanes or windstorms.
- Tested to Dade County protocols and ASTM Standards.
- HC980 and 12-HC980
  - 2" (51mm) x 3" (76mm) steel channel iron
  - Malleable iron top and bottom retainers
  - 96" (2438mm) Length
  - 12- Fire labeled version

988 Surface Bolt Kit

- Designed for severe wind load (Hurricane Code) environments where surface bolts are required such as on inactive door leafs
- Tested to Dade County protocols
- All steel construction for maximum strength and heavy duty use
- Full 3/4" (19mm) square, 12" (305mm) bolt with 1-1/4" (32mm) throw

654 Top Plate

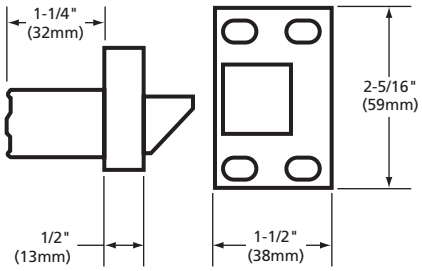

- For HC8700/12-HC8700
- Latchbolt nylon coated
- Stainless steel

655 Bottom Strike

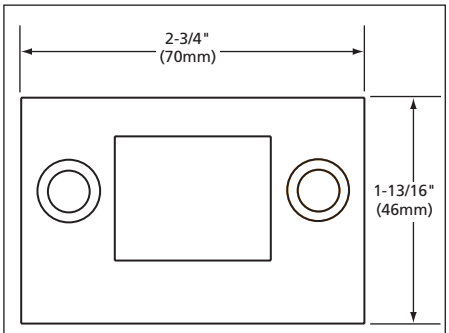

- For HC8700/12-HC8700
- Stainless steel
- Black nylon coated

80 Series Exit Devices
NB8700, 12-NB8700
Surface Vertical Rod Exit Device

SARGENT
1-800-727-5477
www.sargentlock.com

Features

- Allows free access for wheel chairs and carts
- Tripping potential removed - no bottom strike
- Eliminates marred floors due to dragging bottom bolts
- Top case latchbolt projection adjustable through center case
- All functions determined by outside trim

Specifications

For Doors	Wood or metal. 1-3/4" (44mm) thick standard. Available on order for doors up to 2-1/4" (70mm) thick. 4-1/2" (114mm) minimum stile with trim and 3-1/2" (89mm) minimum stile without trim. Max. door height 120" (3048mm), for metal door
Mounting	Supplied standard with wood and machine screws Available on order with thru-bolts and mortise nuts
Chassis Cover	Cold drawn brass, bronze or stainless steel
Chassis	Nonferrous alloy
Hand	Handed. Specify RHRB or LHRB
Dogging Feature Non 12- only	Allen-type dogging furnished standard. Available with cylinder dogging (16- prefix)
Strike	646
Top Bolt	Stainless steel
Rods	1/2" (13mm) brass, bronze or stainless steel
Fire Exit Hardware	See chart page 2. Thermal pin required (supplied)
Trim	ET trim only
Electric Functions	See Product Systems Manual
Rail Height	Specify door opening and mounting height of center line of rail when ordering any Vertical Rod Exit Device
Opening Height	90" (229cm) Standard for Contract

646 Top Strike

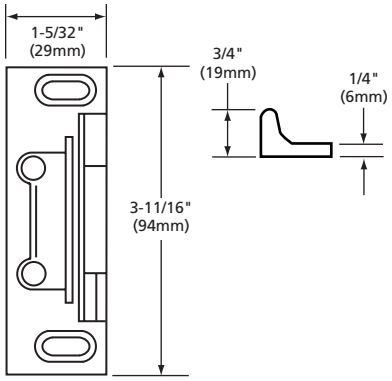

- Standard for NB8700 and 12-NB8700
- Surface applied to frame
- Black nylon coated

80 Series Exit Devices
8800, 12-8800 Series Rim Exit Device

SARGENT
1-800-727-5477
www.sargentlock.com

Features

- Designed for standard width stile applications on metal and wood doors
- Single and double door applications
- Solid stainless steel latchbolt. Meets UL panic test requirements without roller strikes which compromise strength and durability
- "Anti-walk" latchbolt design eliminates the need for guarded latchbolt
- Withstands over 5 times ANSI/BHMA A156.3 2001 Grade 1 standards for static load test simulating forced entry
- Endures over 8 times the ANSI/BHMA A156.3 2001 Grade 1 cycle testing standard
- UL Fire and Panic listed

Single Door

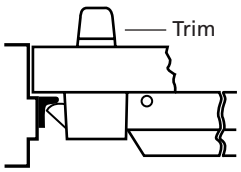

(8800) 641 Strike
(12-8800) 649 Strike

Double Door 12-8800 with 12-980 Mullion

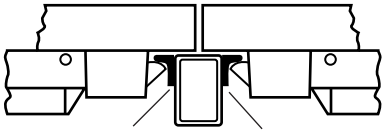

Double Door 8800 x 980 Mullion

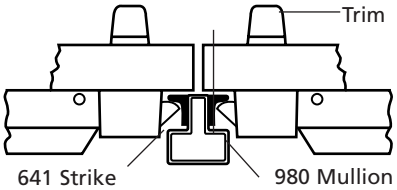

641 Strike

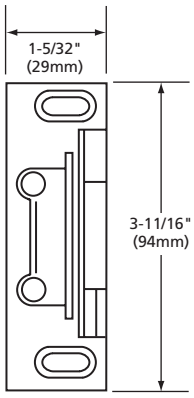

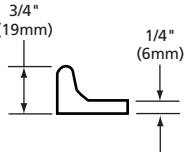

- Standard strike
- Surface applied
- Black nylon coated

Specifications

For Doors	Wood or metal. 1-3/4" (44mm) thick standard. Available on order for doors up to 2-1/4" (57mm) thick. See minimum stile width requirements this page
Mounting	Supplied standard with wood and machine screws. Available on order with thru-bolts and mortise nuts
Chassis Cover	Cold drawn brass, bronze or stainless steel
Chassis	Nonferrous alloy
Hand	Handed functions: 16, 28, 62, 63, 66
	Non-handed functions: 04, 06, 10, 13, 15, 40, 43, 44, 46, 73, 74, 75, 76, 77, 78
Dogging Feature Non 12- only	Allen-type dogging furnished standard. Available with cylinder dogging (16- prefix)
Latchbolt	Stainless steel, 3/4" (19mm) throw
Strike	641 standard, 649 for 12-
Fire Exit Hardware	See chart page 2
Trim	See Trim Designs section
Electric Functions	See Product Systems Manual

Minimum Stile Width

Strike	Backset with 5/8" (16mm) Stop	FLW, MAL, and STS Trim	PTB Trim	ET Trim
Single Door				
641	2-3/4" (70mm)	4" (102mm)	4-1/2" (114mm)	4" (102mm)
613	2-1/4" (57mm)	3-3/4" (95mm)	4-1/2" (114mm)	4" (102mm)
642	2" (51mm)	3-1/2" (89mm)	4" (102mm)	4" (102mm)
649 (12-)	2-3/4" (70mm)	4-1/8" (108mm)	4-1/2" (114mm)	4" (102mm)

Strike	Backset from ℄ of Mullion	FLW, MAL, and STS Trim	PTB Trim	ET Trim
Double Door x 980 Mullion				
641	2-7/8" (52mm)	4-1/8" (108mm)	4-1/2" (114mm)	4-1/16"(103mm)
Double Door x 12-980 Mullion				
649	3-1/4" (76mm)	4-1/8" (108mm)	4-1/2" (114mm)	4" (102mm)

80 Series Exit Devices
HC8800, 12-HC8800 Hurricane Code Rim Exit Device

SARGENT
1-800-727-5477
www.sargentlock.com

The Hurricane Code Hardware has been accepted by Dade County, Florida. It meets the abuse and high wind loads required by South Florida building code. These exits are accepted and approved for use with CURRIES hollow metal doors and McKINNEY hinges.

Any substitution of hardware makes the Hurricane Code inapplicable.

- Available for single door applications

Specifications: Single Door, Dade County Acceptance # 02-0814.05

Doors	4'0" x 7'0" (1219mm x 2134mm) 16 gauge 747
Frames	16 gauge KD, Pipe spacer Anchors only, 4 per Jamb no foot clips
Hardware	McKINNEY TA2714 or T2714 SARGENT HC8800 or 12-HC8800 Exit Devices
Strike	649
Trims	ET Trim available in 704, 710, 713-8, 715-8, 775-8, 776-8 and any trim for 10 or 04 functions
Functions	04, 10, 13, 15, 40, 43, 44, 75, 76

Restrictions

- The specifications listed are the maximum allowable conditions to which the hardware is approved
- The approved single openings cannot be used as a pair, but a leaf of a pair can be used as a single opening
- Weatherstrip/threshold used for testing and approved:
  Pemko S88 on head & jamb
  Pemko 2005AS as threshold
- The openings must be configured as described. There are no hardware substitutions permitted

649 Strike

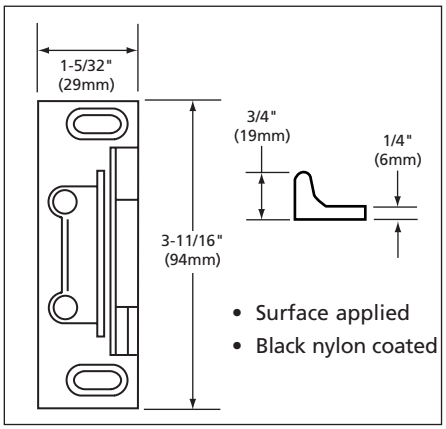

- Surface applied
- Black nylon coated

HC Hurricane Code Mullions

- Designed for severe wind load conditions due to hurricanes or windstorms.
- Tested to Dade County protocols and ASTM Standards.
- HC980 and 12-HC980
  - 2" (51mm) x 3" (76mm) steel channel iron
  - Malleable iron top and bottom retainers
  - 96" (2438mm) Length
  - 12- Fire labeled version

988 Surface Bolt Kit

- Designed for severe wind load (Hurricane Code) environments where surface bolts are required such as on inactive door leaf
- Tested to Dade County protocols
- All steel construction for maximum strength and heavy duty use
- Full 3/4" (19mm) square, 12" (305mm) bolt with 1-1/4" (32mm) throw

80 Series Exit Devices
8888, 12-8888 Reversible Rim Exit Device

SARGENT
1-800-727-5477
www.sargentlock.com

Features

- Designed for standard width stile applications on wood and metal doors
- Non-handed, field reversible
- Single and double door applications
- UL Fire and Panic listed

Specifications

For Doors	Wood or metal. 1-3/4"(44mm) and 2-1/4" (57mm) thick
Mounting	Supplied standard with wood and machine screws Available on order with thru-bolts and mortise nuts
Chassis Cover	Cold drawn brass, bronze or stainless steel
Chassis	Nonferrous alloy
Hand	Non-handed
Dogging Feature (Non 12- only)	Allen-type dogging furnished standard
Latchbolt	Stainless steel, 3/4" (19mm) throw
Strike	641 standard, 649 fire rated (12-)
Fire Exit Hardware	See chart page 2
Trim	Rose and lever, ET or PSB
Functions	04, 10, 13, 15

713-8 ET Lever Control

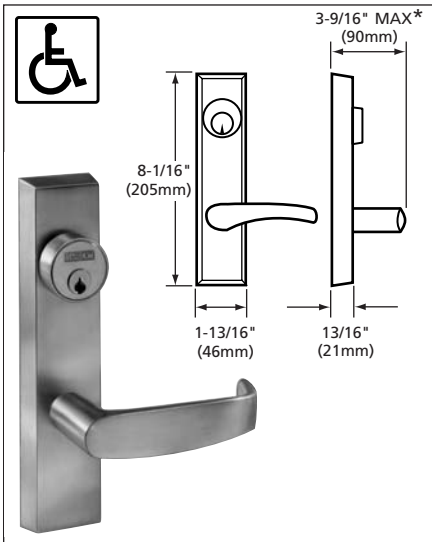

- Easy operating lever handle allows convenient one hand operation
- Example shows 713-8 ET with "L" lever design (713-8 ETL).
- ET not available in 32, 32D
- Lever available in 32, 32D as option add
- Specify hand when ordering

* Projection varies by lever design.

Rose and Lever Trim

LB
ROSE: L
LEVER: B

Trim	Description
88-K-L_*	04 (Key retracts latchbolt)
88-D-L _*	10 (Dummy lever/exit only)
88-C-L_*	13 (Key locks/unlocks lever)
88-L-L_*	15 (Lever always operable)

* Specify lever design and hand.
Lever designs: L, B, J and P.
L rose only.

PSB Trim

Trim	Description
98-E-PSB	Plate only
98-D-PSB	Dummy pull
98-K-PSB	Cylinder operates latchbolt

641 Strike

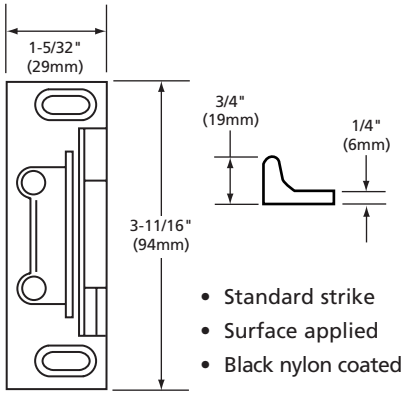

- Standard strike
- Surface applied
- Black nylon coated

649 Strike

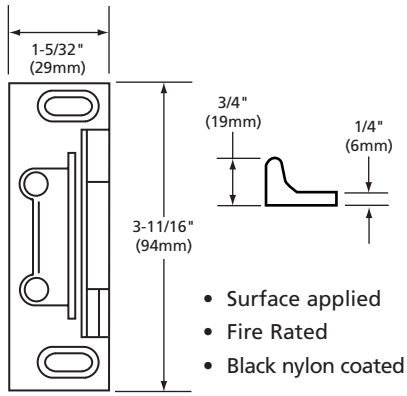

- Surface applied
- Fire Rated
- Black nylon coated

80 Series Exit Devices
8900, 12-8900 Mortise Lock Exit Device

SARGENT
1-800-727-5477
www.sargentlock.com

Features

- Designed for standard width stile applications on wood and metal doors
- Thru-bolted mortise lock for quiet operation and security
- Single and double door applications
- UL Fire and Panic listed
- Accepted by Dade County, Florida as wind storm/hurricane hardware for single door applications. Acceptance # 02.0222.07

Single Door

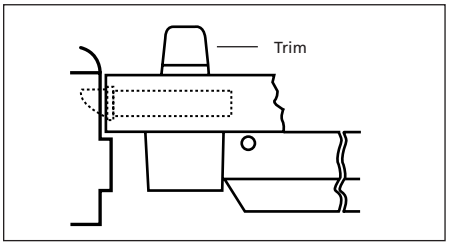

Pair of Doors

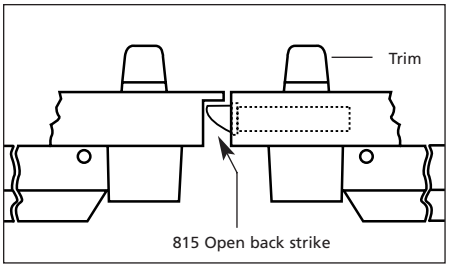

Specifications

For Doors	Wood or metal. 1-3/4" (44mm) thick standard. Available on order for doors up to 2-1/4" (57mm) thick. Minimum stile requirement 4-1/2" (114mm)
Mounting	Supplied standard with wood and machine screws. Available on order with thru-bolts and mortise nuts
Chassis Cover	Cold drawn brass, bronze or stainless steel
Chassis	Nonferrous alloy
Hand	Handed. Specify RHRB or LHRB
Dogging Feature Non 12- only	Allen-type dogging furnished standard. Available with cylinder dogging (16-prefix)
Mortise Lock	900 Series
Strike	C908 standard. For alternate strikes, see Strike section
Fire Exit Hardware	See chart page 2
Trim	See Trim Designs section
Electric Functions	See Product Systems Manual

900 Series Mortise Lock

For Doors	1-3/4" (44mm) to 2-1/4" (57mm) thick
Prep	ANSI Standard A115.1
Latchbolt	Brass, 3/4" (19mm) throw, anti-friction
Guardbolt	Brass, sliding type
Front	Brass, beveled 1/8" (3mm) in 2" (51mm). Flat front available on order
Handed	Non reversible. Specify hand when ordering

C908 Standard Strike

- Curved lip ANSI A-115.1
- Handed. 1-1/4" (32mm) lip standard
- Longer lips in increments of 1/4" (6mm) through 2-7/8" (73mm) available
- Black nylon coated

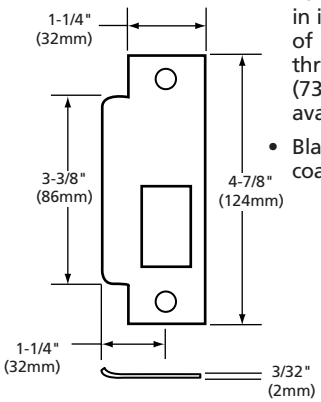

815 Open Back Strike

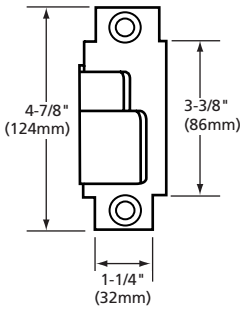

- ANSI A-115.14 Open Back
- Beveled 1/8" (3mm) in 2" (51mm)
- Specify hand of active door
- Black nylon coat
- "B" label

80 Series Exit Devices
Coastal Series™ Decorative Levers

SARGENT
1-800-727-5477
www.sargentlock.com

ET Lever Controls

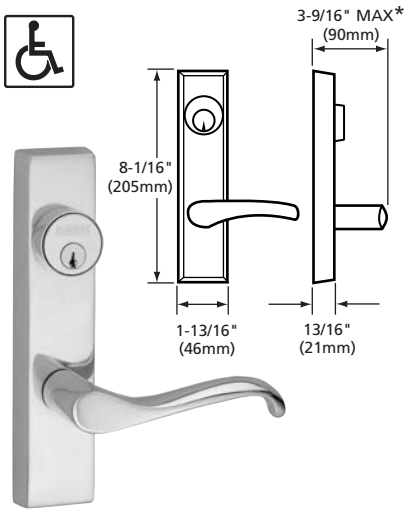

Can be used with all SARGENT 80 Series exit devices. Easy operating lever handle allows convenient one hand operation.

ETC - Coronado™

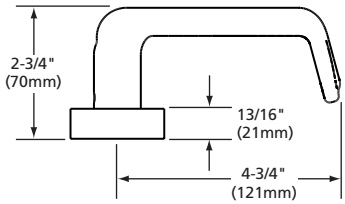

ETR - Rockport™

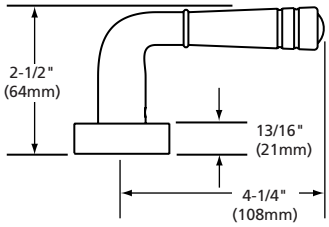

ETY - Yarmouth™

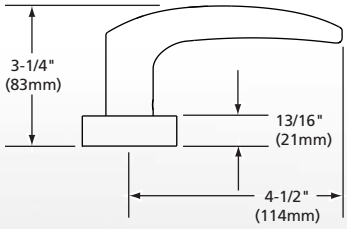

- Specify hand when ordering

ETG - Gulfport™

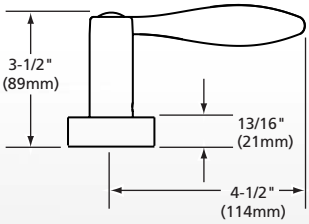

- Specify hand when ordering

ETS - Sanibel™

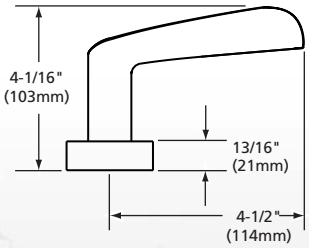

- Specify hand when ordering

- All Coastal Series™ levers are interchangeable with all 700 Series ET Trims
- All levers – solid cast brass
- All standard functions available
- Finishes available 3, 4, 9, 10, 10B, 10BL, 20D, 26, 26D
- 5 year limited warranty

Important: Consult installation templates for control mounting heights when used on pairs of doors.

ET Lever Controls

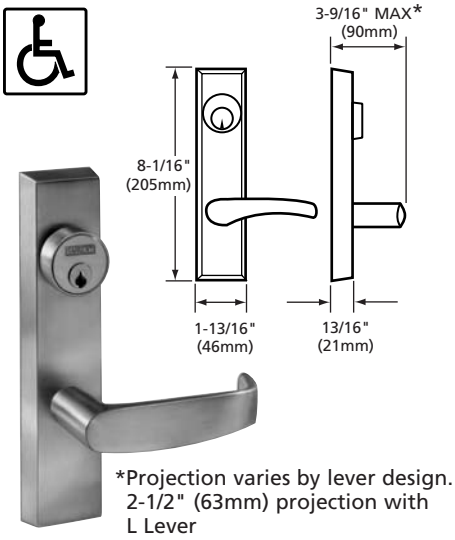

*Projection varies by lever design. 2-1/2" (63mm) projection with L Lever

Can be used with all SARGENT 80 Series exit devices. Easy operating lever handle allows convenient one hand operation.

ET not available in 32, 32D. Lever available in 32, 32D as option add.

All levers are brass or bronze. Stainless steel is available, consult factory.

Important: Consult installation templates for control mounting heights when used on pairs of doors.

ETJ

- Solid

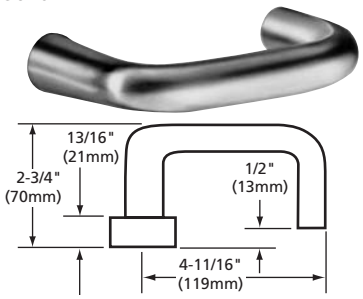

ETW

- Solid

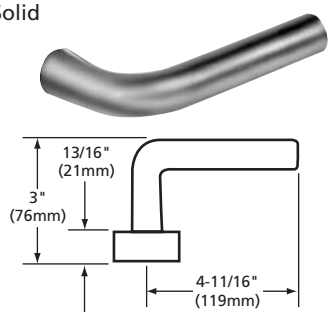

ETA

- Handed

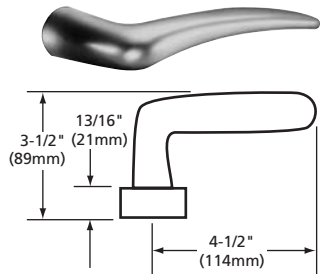

ETB

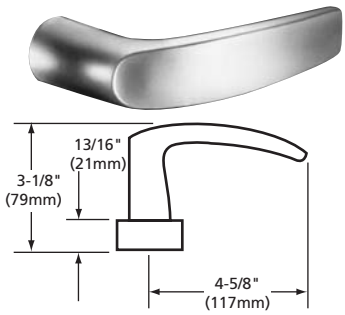

ETE

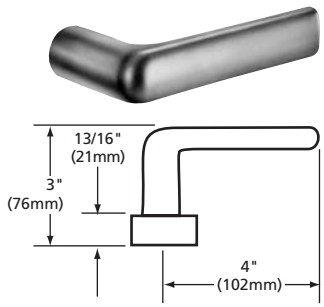

ETF

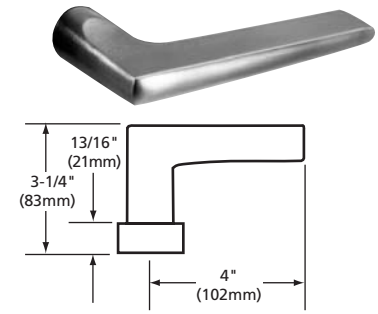

ETL

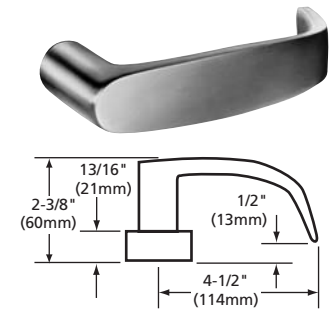

ETP

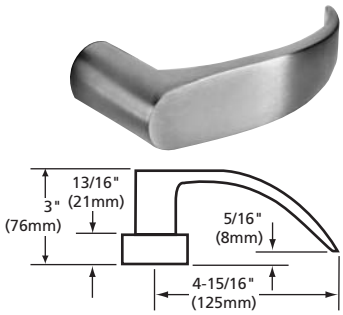

Pulls

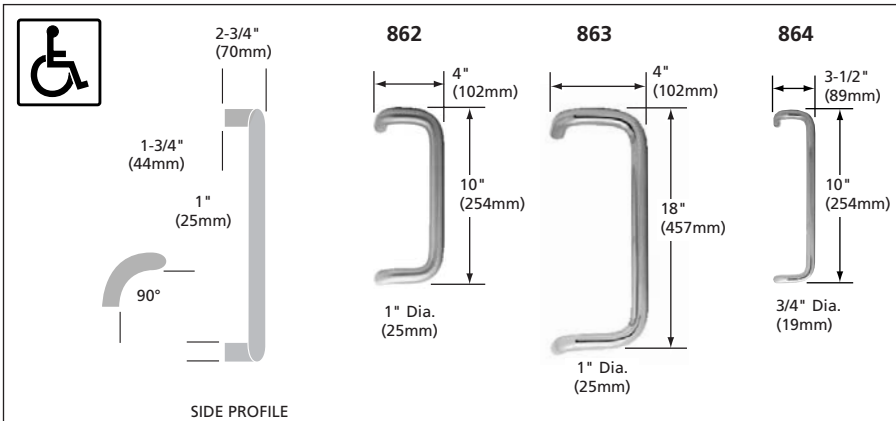

FLL

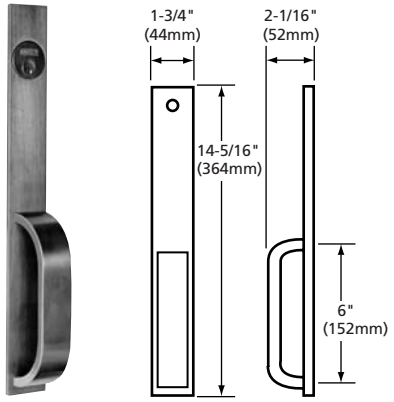

Trim Number	Function
874FLL	04
874FLLDT	10
884FLL	28
894FLL	62, 63, 66, 70 & 71

04 Function Shown

FLW

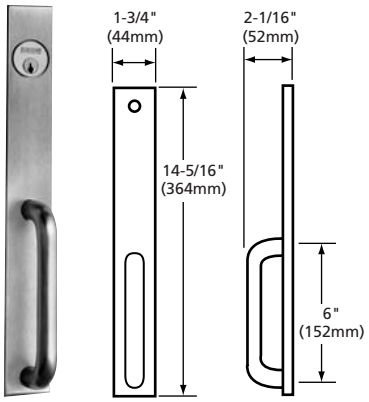

Trim Number	Function
813FLW	04
813FLWDT	10
843FLW	28
833FLW	62, 63, 66, 70 & 71

Not available in 32, 32D

04 Function Shown

MAL

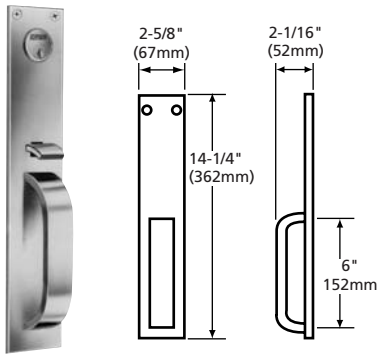

Trim Number	Function
818MAL	04
818MALDT	10
828MAL	28
838MAL	62, 63, 66, 70 & 71

63 Function Shown

PTB

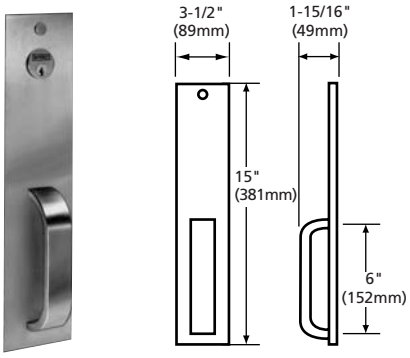

Trim Number	Function
812PTB	04
812PTBDT	10
842PTB	28
832PTB	62, 63, 66, 70 & 71

04 Function Shown

STS

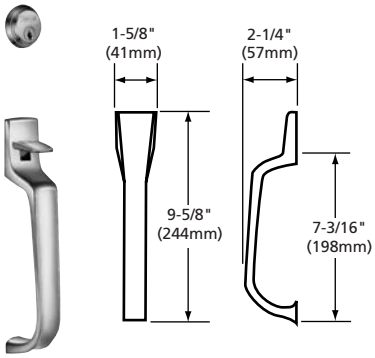

Trim Number	Function
876STS	04
876STSDT	10
886STS	28
896STS	62, 63, 66, 70 & 71

63 Function Shown

Pulls above are thru-bolted

Thru-bolting of trim allows for perfect alignment of thumbpieces, cylinders and spindles. Thru-bolts pass through the chassis of the devices and are bolted directly to the trim piece.

FSL, FSW, MSL and PSB pulls are used with 12-8804 and 8804 only and are the same as FLL, FLW, MAL and PTB pulls except for cylinder hole located 3/8" (9mm) lower.

80 Series Exit Devices
Anti-Vandal Trim – AVT
988 Surface Bolt Kit

SARGENT
1-800-727-5477
www.sargentlock.com

Anti-Vandal Trim

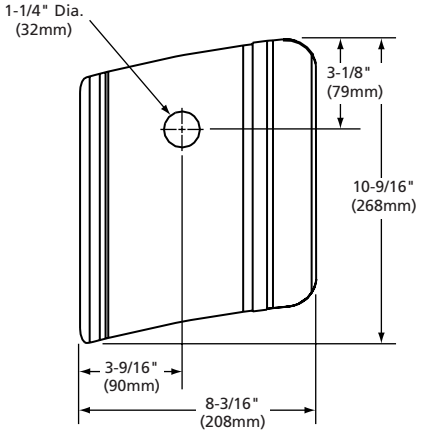

Designed for exterior doors that require extra security or resistance to vandalism, AVT anti-vandal trim plates have an extended lip on the active side of the door to provide extra protection for the latch bolt. A matte plastic coated grip provides a comfortable pull that feels good over wide temperature ranges. Fully thru-bolted with no exposed exterior fasteners for a cleaner look and increased security.

Features

- Heavy duty 12 gauge stainless steel in 32D finish
- Thru-bolted for added strength
- Handed – Specify RHRB or LHRB
- ADA Compliant
- Patent Pending
- Available for cylinder functions or as pull only
- Not available with PP, PR, SP or NB prefixes
- Without protective lip for inactive door
- Order exit less trim and part number as separate line item
- AVT Retrofit Kit easily works with existing product with minor modification to prep

Function	Part Number	Application
		Single Door
4	824 with lip	All 8900; 8800 manufactured before Feb. 2001
4	826 no lip	8800 only, manufactured after Feb. 2001
10	827 with lip	8600, 8700, 8800 and 8900
10	821 no lip	8600, 8700, 8800 and 8900
		Double Door (Active Leaf)
4	824 with lip	8900
4	826 no lip	8800 only, manufactured after Feb. 2001
10	827 with lip	8900
10	821 no lip	8600, 8700, 8800 and 8900
	821 for use on all inactive leafs	

988 Surface Bolt Kit

- Designed for severe wind load (Hurricane Code) environments where surface bolts are required such as on inactive door leafs
- Tested to Dade County protocols
- Listed to UL 10C for use on fire rated door assemblies. Refer to codes for locations where surface bolts are allowed on fire doors
- All steel construction for maximum strength and heavy duty use
  - Full 3/4" (19mm) square, 12" (305mm) bolt with 1-1/4" (32mm) throw
  - Bright zinc plated finish
  - Jimmy-resistant design, locks bolt automatically when thrown, released by pressing knob toward door while retracting
  - Bolt can be locked in retracted or thrown position
- Angle (L shaped) and mortise strike with mounting hardware supplied standard

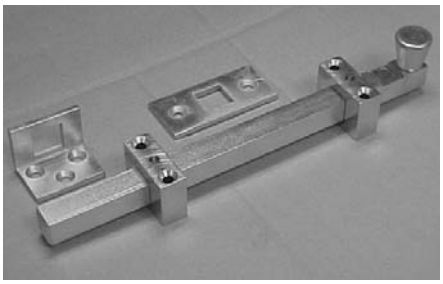

80 Series Exit Devices
Freewheeling Trim Designs

SARGENT
1-800-727-5477
www.sargentlock.com

The SARGENT Freewheeling ET Trim is designed for areas historically notorious for vandalism. These are in schools, gymnasiums, exterior or stairwell doors, or anywhere vandalism is a concern. The freewheeling lever design allows the lever handle to swing freely up to 70 degrees. The freewheeling design can significantly reduce potential damage to the trim and exit device incurred during malicious activities.

	8300 12-8300 ANSI Type 10	8400 12-MD8400 ANSI Type 6	8500 ANSI Type 4	MD8600 12-MD8600 ANSI Type 8	WD8600 12-WD8600 ANSI Type 7	PP/PR/SP8600 12-PP8600 12-PR8600 12-SP8600
40 **No outside operation.** **Lever rotates**	740 ET	740-4 ET	740 ET	740-4 ET	740-4 ET	740-6 ET
43 **Key engages or disengages**	743 ET	743-4 ET	743-5 ET*	743-4 ET	743-4 ET	743-6 ET
44 **Key retracts latchbolt.** **Lever rotates**	744 ET		744 ET			
46 **Operates only when key is in cylinder and turned. Key engages lever to retract latchbolt**		746-4 ET		746-4 ET	746-4 ET	746-6 ET

	HC8700 12-HC8700 8700 12-8700	HC8800 12-HC8800	PP/PR/SP8700 12-PP8700 12-PR8700 NB8700 12-NB8700	8800 ANSI Type 1	8888 12-8888 ANSI Type 1	8900 12-8900 ANSI Type 3
40 **No outside operation.** **Lever rotates**	740 ET	740 ET	740 ET	740 ET	740 ET	740 ET
43 **Key engages or disengage**	743 ET	743-8 ET**	743-8 ET**	743 ET	743-8 ET**	743 ET
44 **Key retracts latchbolt.** **Lever rotates**		744 ET		744 ET	744 ET	744 ET
46 **Operates only when key is in cylinder and turned. Key engages lever to retract latchbolt**	746 ET	746-8 ET	746-8 ET	746 ET		

* Includes spindle adapter 68-3672
** Includes spindle adapter 68-3671

# = ANSI Function	8300 12-8300 ANSI Type 10	8400 ANSI Type 6	12-MD8400 ANSI Type 6	8500 ANSI Type 4	MD8600 12-MD8600 ANSI TYPE 8	WD8600 12-WD8600 ANSI TYPE 7
04 **Key retracts latchbolt.**	704 ET STS, FLL, MAL, PTB, FLW 03 04			704 ET 822x34 Cyl 03 04		
06 **Operates only when key is in cylinder and turned. Lever retracts latchbolt.**		706-4 ET 09 822 x106 Aux Ctrl* 12	706-4 ET 09 822 x106 Aux Ctrl* 12		706-4 ET 09 822 x106 Aux Ctrl* 12	706-4 ET 09 822 x106 Aux Ctrl* 12
10 **No outside operation. Dummy trim available.**	710 ET STS, FLL, MAL, PTB, FLW 01 02	710-4 ET 01 02	710-4 ET 01 02	822 710 ET 01 02	710-4 ET 01 02	710-4 ET 01 02
13 **Key locks or unlocks lever or auxiliary control.**	713 ET 08	713-4 ET 08 822 x113 Aux Ctrl* 11	713-4 ET 08 822 x113 Aux Ctrl* 11	713-8 ET 08	713-4 ET 08 822 x113 Aux Ctrl* 11	713-4 ET 08 822 x113 Aux Ctrl* 11
15 **No cylinder. Trim always operable.**	715 ET	715-4 ET	715-4 ET	715-8 ET	715-4 ET	715-4 ET
16 **Key outside retracts latchbolt. Key inside locks or unlocks lever. Freewheeling lever.**						
28 **Similar to 63 with no outside cylinder. Thumbpiece always operable.**	STS, FLL, MAL, PTB, FLW					
62 **Thumbpiece is operative only when key is in cylinder and turned.**						
63 **Key locks or unlocks thumbpiece.**	STS, FLL, MAL, PTB, FLW 05					
66 **Key outside retracts latchbolt. Key inside locks or unlocks thumbpiece.**						

* When ordering Aux. Control, specify exit device as 10 function.

80 Series Exit Devices
Mechanical Functions

SARGENT
1-800-727-5477
www.sargentlock.com

PP/PR/SP8600 12-PP8600 12-PR8600 12-SP8600	LP/LR/LS8600 12-LP8600 12-LR8600 12-LS8600	8700 12-8700 ANSI TYPE 2		HC8700 12-HC8700		PP/PR/SP8700 12-PP8700 12-PR8700 12-SP8700 NB8700 12-NB8700	8800 12-8800 ANSI TYPE 1	HC8800 12-HC8800	8888 12-8888 ANSI TYPE 1	8900 12-8900 ANSI TYPE 3
							704 ET, STS, FSL, MSL, PSB, FSW 03 04	704 ET STS, FSL, MSL, PSB, FSW	704 ET STS, PSB 88K-L 03 04	704 ET, STS, FLL, MAL, PTB, FLW 03 04
706-6 ET 09	706-6 ET 09	706 ET 09	306 Aux Ctrl * 12	706 ET 09	306 Aux Ctrl * 12	706-8 ET 09	706-8 ET 09	706-8 ET 09	706-8 ET 09	
710-6 01 02	710-6 01 02	710 ET, STS, FLL, MAL, PTB, FLW 01 02		710 ET, STS, FLL, MAL, PTB, FLW 01 02		710 ET 01 02	710 ET, STS, FLL, MAL, PTB, FLW 01 02	710 ET 01 02	710 ET 88D-L 01 02	710 ET, STS, FLL, MAL, PTB, FLW 01 02
713-6 ET 08	713-6 08	713 ET 08	313 Aux Ctrl * 11	713 ET 08	313 Aux Ctrl * 11	713-8 ET 08	713-8ET 08	713-8 ET	713-8 ET 88C-L 08	713 ET 08
715-6 ET	715-6	715 ET		715 ET		715-8 ET	715-8ET	715-8 ET	715-8 ET 88L-L	715 ET
							716 ET 10			716 ET 10
		STS, FLL, MAL, PTB, FLW		STS, FLL, MAL, PTB, FLW			STS, FLL, MAL, PTB, FLW			STS, FLL, MAL, PTB, FLW
		STS, FLL, MAL, PTB, FLW 06		STS, FLL, MAL, PTB, FLW 06						
		STS, FLL, MAL, PTB, FLW 05		STS, FLL, MAL, PTB, FLW 05			STS, FLL, MAL, PTB, FLW 05			STS, FLL, MAL, PTB, FLW 05
							STS, FLL, MAL, PTB, FLW 07			STS, FLL, MAL, PTB, FLW 07

* When ordering Aux. Control, specify exit device as 10 function.

SARGENT
1-800-727-5477
www.sargentlock.com

	8300 12-8300	8400	12-MD8400	8500	MD8600 12-MD8600
70 **Key retracts latchbolt. Power off, unlocks thumbpiece.**	STS, FLL, MAL, PTB, FLW				
71 **Key retracts latchbolt. Power off, locks thumbpiece.**	STS, FLL, MAL, PTB, FLW				
73 **Power off, unlocks lever.**		773-4 ET	773-4 ET	773-5 ET*	773-4 ET
74 **Power off, locks lever.**		774-4 ET	774-4 ET	774-5 ET*	774-4 ET
75 **Power off, unlocks lever. Key o/s retracts latchbolt.**	775 ET				
76 **Power off, locks lever. Key o/s retracts latchbolt.**	776 ET				

	WD8600 12-WD8600	PP/PR/SP8600 12-PP8600 12-PR8600 12-SP8600	8700 12-8700	PP/PR/SP8700 12-PP8700 12-PR8700 12-SP8700 NB8700 12-NB8700	8800 12-8800	8900 12-8900
70 **Key retracts latchbolt. Power off, unlocks thumbpiece.**						STS, FLL, MAL, PTB, FLW
71 **Key retracts latchbolt. Power off, locks thumbpiece.**						STS, FLL, MAL, PTB, FLW
73 **Power off, unlocks lever.**	773-4 ET	773-6 ET	773 ET	773-8 ET**		
74 **Power off, locks lever.**	774-4 ET	774-6 ET	774 ET	774-8 ET**		
75 **Power off, unlocks lever. Key o/s retracts latchbolt.**					775-8 ET	775 ET
76 **Power off, locks lever. Key o/s retracts latchbolt.**					776-8 ET	776 ET

* Includes spindle adapter 68-3672
** Includes spindle adapter 68-3671

80 Series Exit Devices Accessories – Dummy Rails, Auxiliary Controls and Alternate Strikes

SARGENT
1-800-727-5477
www.sargentlock.com

ET Cover Plate

For all ET functions.

88-E-PTB

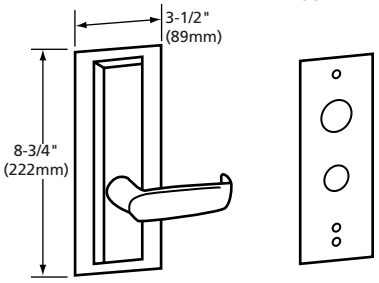

The 88-E-PTB is designed to be mounted behind the ET control to cover a stock hollow metal cutout.

8893 Dummy Rail

A decorative push bar for vestibule door applications where continuity of design is desired but no exit device is required. Outside dummy trim available on order. **Specify door width and door stile width when ordering.**

8895 Active Dummy Rail

Push rail operates on this rail to simulate active doors. Can be used with dummy trim. **Specify door width and door stile width when ordering. Available with electrical 55- prefix.**

809 Touchpad Kit

- Lexan touchpad replacement kit for all 80 Series push rails
- Direct replacement – uses existing mounting holes

Vertical Rod Trim Auxiliary Outside Controls

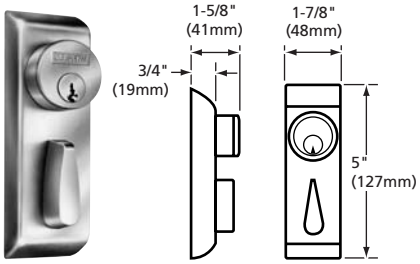

Can be used in conjunction with SARGENT mortise cylinders. Size 41 cylinder standard. Control operates with a turn lever allowing use with a door pull.
For doors over 1-3/4" (44mm) Consult factory

To order, specify device number as 10 function x control. Example: MD8610 x 106 Control x 32D. Finishes available: 3, 4, 10, 10B, 10BL, 20D, 26, 26D, 32 and 32D.

Auxiliary Control	Function
106	For 8410, 12-MD8410, MD8610, 12-MD8610. Operates only when key is in cylinder and turned.
WD106	For WD8610, 12-WD8610. Operates only when key is in cylinder and turned.
113	For 8410 and 12-MD8410, MD8610, 12-MD8610. Key locks or unlocks lever.
WD113	For WD8610 and 12-WD8610. Key locks or unlocks turn lever.
306	For 8710 and 12-8710. Operates only when key is in cylinder and turned.
313	For 8710 and 12-8710. Key locks or unlocks lever

97-2378 for 8700 Inside Lever Assembly

Applies to inside of door on vertical rod applications. Packed standard with 306 and 313 auxiliary controls.

Alternate Strikes for 8700 Surface Vertical Rod Devices

636 Strike

Alternate for 8700. Requires a mortise in the floor.

Black nylon coated

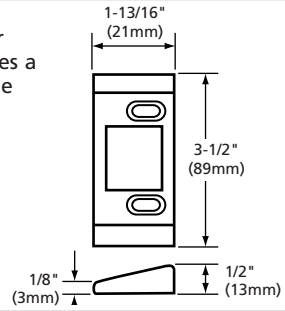

647 Strike

Standard for 14-8700. Requires no mortise in the floor and can be used with 8700.

Black nylon coated

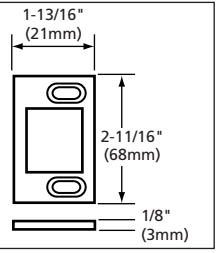

648 Strike

For doors having transom panel applications.

Black nylon coated

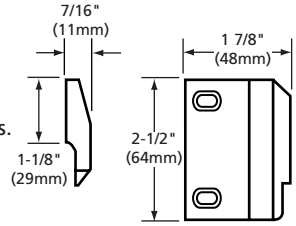

653 Strike

For 12-8700

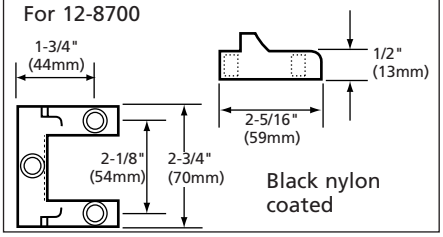

Black nylon coated

Alternate Strikes For 8800 Rim Devices

649 Strike

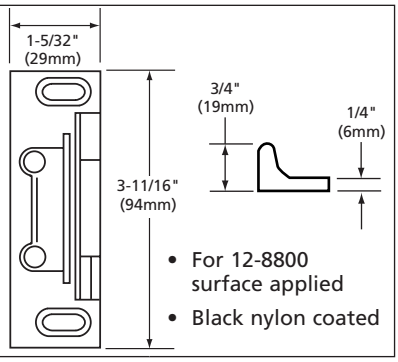

- For 12-8800 surface applied
- Black nylon coated

613 Strike

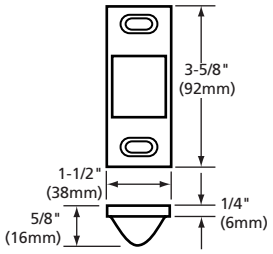

- Half mortised. Black nylon coated.

642 Strike

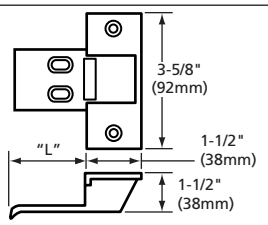

- Mortised. Dimension "L" equals door thickness plus 1/2" (13mm). Black nylon coated on lip only.

644 Strike

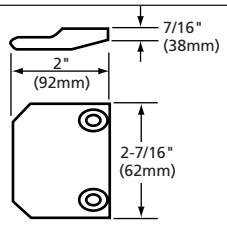

- Surface applied. For use on pairs of doors without mullion. Brass, bronze. Black nylon coated.

980 Removable Mullion

980 Extruded Aluminum (prime coat)
980A Aluminum (US28)
Consists of:

- Mullion
- 511 Top retainer
- 502 Bottom retainer
- 96" (2438mm) stock size
- Up to 120" (3048mm) size avail.

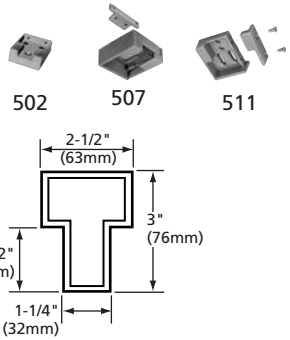

650A Removable Mullion

The 650A Mullion assembly consists of:

- Mullion
- 94-2050 Top Retainer
- 94-2051 Bottom Retainer
- 651 Stabilizer
- 96" (2438mm) stock size
- Up to 120" (3048mm) size available
- Prepped for (2) 658 strikes (included)

Finishes: US28 Aluminum anodized clear, 313AN Aluminum to match 10B

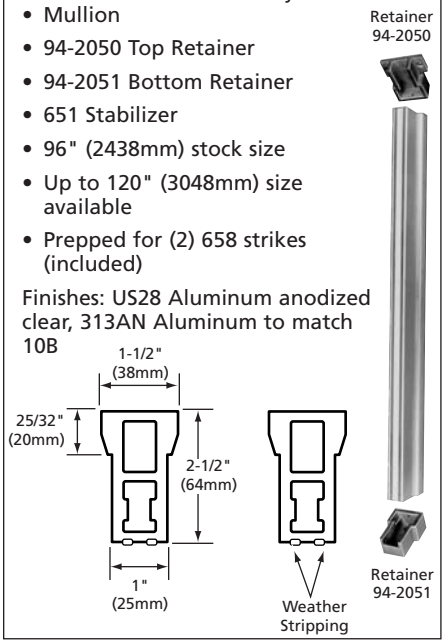

507 Adapter for Narrow Transom Bars

- Required when soffit is 1-1/4" (32mm) to 2" (51mm) wide

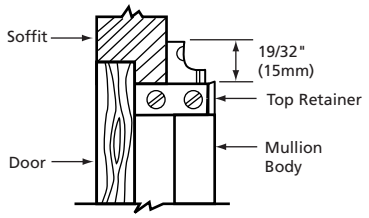

HC Hurricane Code Mullions

Designed for severe wind load conditions due to hurricanes or windstorms. Tested to Dade County protocols and ASTM Standards.

HC980 and 12-HC980
– 2" x 3" (51 x 76mm) steel channel iron
– Malleable iron top and bottom retainers
– 96" (2438mm) Length
– 12- Fire labeled version

12-980 Mullion (96" maximum)

For 12-8800

2"x 3" (51 x 76mm) channel iron. Malleable iron top and bottom retainers. Standard length 96" (2438mm).

Lengths from 97" (2464mm) to 120" (3048mm) are not UL fire labeled.

98-2312

Top and bottom retainer pack.

980S Steel Mullion

2"x 3" (51 x 76mm) Channel iron. Malleable iron top and bottom retainers. Standard length 96" (2438mm).

Lengths from 97" (2464mm) to 120" (3048mm)

98-2312

Top and bottom retainer pack.

L980S Steel Lockable Mullion

- Steel
- Non fire rated
- 96" (2438mm) stock size
- 120" (3048mm) available
- All cylinder prefixes available
- #41 mortise cylinder

L980A Lockable Mullion

- Anodized aluminum or 10B
- Non fire rated applications only
- 96" (2438mm) stock size
- 120" (3048mm) available
- All cylinder prefixes available
- #41 mortise cylinder

L980 Lockable Mullion

- Aluminum Prime Coat or 10B
- Used for non fire rated applications, exterior openings
- 96" (2438mm) stock size
- 120" (3048mm) available
- All cylinder prefixes available
- #41 mortise cylinder

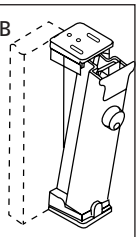

12-L980 Lockable Mullion

- Steel
- Fire rated for 8'0" x 8'0" (244cm x 244cm) paired openings
- 96" (2438mm) stock size
- 120" (3048mm) available
- All cylinder prefixes available
- #41 mortise cylinder

EL980 Electric Lockable Mullion

- Steel
- For use with monitor or electric strikes
- Quick-Connect wiring supplied
- 96" (2438mm) stock size
- 120" (3048mm) available
- All cylinder prefixes available
- Not available in 12- prefix
- #46 mortise cylinder

Mullion Accessories

RK980
Latchbolt assembly retrofit kit with top and bottom retainers for 980 mullion.

Wall Mount Kit

98-2578	Wall mount kit for L980
98-2579	Wall mount kit for 12-L980, L9805
98-2580	Wall mount kit for EL980

Retainer Packs

Product #	Description
98-2526	Top ret. pack for L980
98-2525	Bottom ret. pack for L980
98-2558	Top ret. pack for 12-L980, L980S
98-2556	Bottom ret. pack for 12-L980, L980S
98-2559	Top ret. pack for EL980

Thru-bolt (TB) Application Example

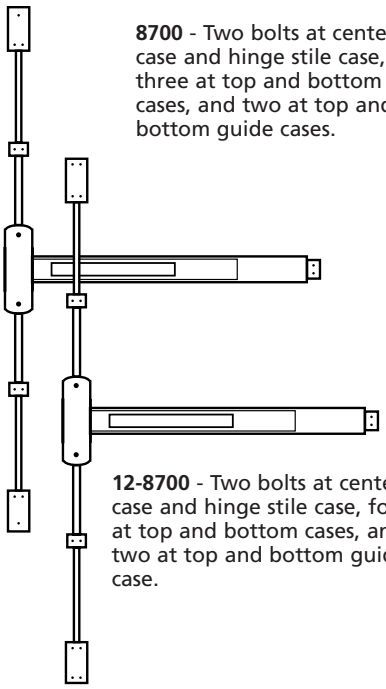

8700 - Two bolts at center case and hinge stile case, three at top and bottom cases, and two at top and bottom guide cases.

12-8700 - Two bolts at center case and hinge stile case, four at top and bottom cases, and two at top and bottom guide case.

Thru-bolts		Qty	Part #
8700	Rail & Chassis	4	68-2279
8700	Cases & Guides	10	68-2282
12-8700	Complete	16	68-2288
8800	Rail & Chassis	4	68-2279

To order thru-bolts with device:

Example: 8804 FLL x TB

Note: Attaching Screws – All series are regularly furnished with wood screws for wood and Kalamein doors and machine screws for metal doors. Thru-bolts and mortise nuts must be specified to mount fire exit devices on composite fire doors with steel, wood or plastic covering.

43- Prefix Flush End Cap

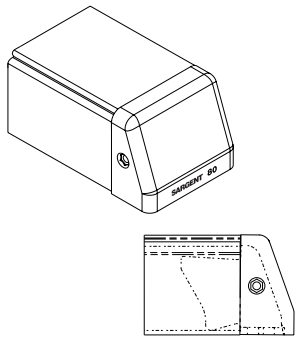

- Flush End Cap for 80 Series exit device
- 665 Kit available for retrofit/replacement

Rod Extension Kits

- For use on surface mounted vertical rods
- Kits available in 6" (152mm), 12" (304mm) or 18" (457mm) lengths

571 – Devices manufactured prior to November 2002.

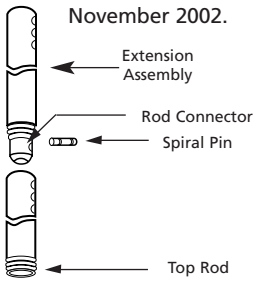

571 – All lengths are screw-on extensions

687 – Devices manufactured after November 2002.

- 6" (152mm) and 12" (304mm) lengths are full length replacement rods
- 687-18" is an 18" (457mm) screw-on extension

To order: Specify length and finish.
Example: 571-6" x US3

Cylinder Dogging 16- Prefix

A 41 mortise cylinder (included) located on the mounting insert locks bolt in retracted position. Available for all 80 Series devices except Fire Exit hardware.

Example: 16-8510 x US3.
NOTE: 27" (686mm) minimum door width is required.

Cylinder Dogging Kits

To order kit only

816-1 = "F" wide
816-2 = "F" narrow
816-3 = "E" & "G" wide
816-4 = "E" & "G" narrow
Cylinder included

565 Metal End Cap Kit

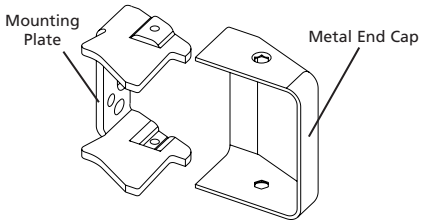

End cap with hardware finish includes mounting plate with wood and machine screws.

Glass Bead Shim Kits

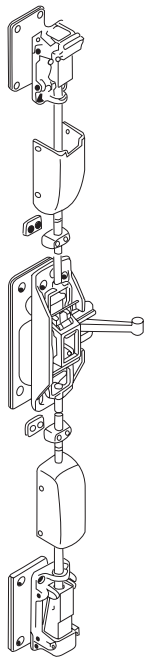

Kit 587 Two each 1/8" (3mm) -thick shims for 8700 Exit Device.

Kit 12-587 Two each 1/8" (3mm) -thick shims for 12-8700 Exit Device.

Kit 589 Two each 1/8" (3mm) shims for concealed vertical rod, rim and mortise lock (8800, 12-8800, 8900 and 12-8900) exit devices.

Kits available in PEN and PEB finishes.

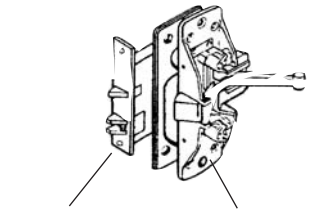

Note:

- Lift lever length must be increased for 8900 and 12-8900
- Shim thickness must not exceed 1/4" (6mm) on 8900 and 12-8900
- Spindles and thru-bolts lengths must be increased on 8700, 12-8700, 8800, 12-8800 exits

SARGENT
1-800-727-5477
www.sargentlock.com

Cylinder Chart for Exit Devices - 6 pin

Function 12-/Reg.	ET		822	PTB, PSB, STS, MAL, MSL, FLL, FSL, FLW, FSW		Auxiliary Control
Door Thickness	1-3/4" (44mm)	2-1/4" (57mm)	1-3/4" (44mm)	1-3/4" (44mm)	2-1/4" (57mm)	1-3/4" (44mm)
8304/8344	46	48		41	43	
8313/8343	41	41				
8363				41	43	
8370				41	43	
8371				41	43	
8375	46	48				
8376	46	48				
8406/8446	41					
8410						41
8413/8443	41	41				
8504	34	34	34			
8513/8543	41	41				
LP/LR/LS8600	41	N/A				
SP/PP/PR8600	41	N/A				
WD8610						41
MD8610						41
WD8613/WD8643	41	41				
MD8613/MD8643	41	41				
SP/PP/PR8700	41	N/A				
8706/8746	41	41				
8710/8740						41
8713/8743	41	41				
8762				34		
8763				34		
8804/8844	34	34		34		
8806/8846	41	41				
8813/8843	41	41				
8816	34/*44	34/*44				
8863				34		
8866				34/*44		
8875	34					
8876	34					
8877	34					
8904/8944	46	48		41	43	
8913/8943	41	41				
8916	*34/46	*34/48				
8963				41	43	
8966				*41/34	*43/34	
8970				41	43	
8971				41	43	
8975	46	48				
8976	46	48				
8977	46	48				

*Inside Cylinder

3487/3488 Door Coordinators

- Prevents active door from closing before inactive door
- Meets Federal Specification FF-H-106a Type 836. Cast bronze with rubber rollers
- U.L. Labeled when used with Fire Exit Hardware
- 3487 (6-3/4" length; 171mm) for pairs of doors equipped with outside astragal
- 3488 (8-5/8" length; 219mm) for pairs of doors equipped with inside and outside astragals. Both include bracket and wear plate
- Packed with wood and machine screws
- Finishes: 10, 26D

3497 Carry Open Bar

For use with door coordinator. Aids in opening active door when inactive door is opened, and protects astragal and overlapping strike. Cast bronze. Packed with wear plate, wood and machine screws. Finishes: 10, 26D

NOTES:
1. For 16- prefix hardware, a 41 inside cylinder is used with blocking ring 97-0349
2. For 19- prefix touchbar projection is 2-9/16" (65mm)
3. Removable core and 70 prefix require special cylinder blocking rings
   - 97-0351 ET control
   - 97-0350 16-prefix
   - 94-0153 Auxiliary controls
4. Less cylinder —SARGENT supplies standard blocking rings. Specify if using competitor cylinders
5. When ordering BEST cylinders for use in SARGENT Exit Devices use following BEST product numbers:
   - Mortise cylinder: 1-E74XC208
   - Rim cylinder: 1ESPL-7-AO5994

80 Series Exit Devices
Options, Rail Sizes

SARGENT
1-800-727-5477
www.sargentlock.com

Rail Sizes

When ordering exit device, state door width on order. Rails will be cut at the factory for specific door widths. For door stiles under 4-1/2" (114mm), specify next largest size. Stock sizes available - Standard Design WD8600, MD8600, 8700, 8800, 8300 and 8900 Exit Devices.

Stock Size	Door Widths	Remarks
E	24" to 32" (61cm to 81cm)	No cutting required for 32"(81cm) door
F	33" to 36" (84cm to 91cm)	No cutting required for 36" (91cm) door
J	37" to 42" (94cm to 107cm)	No cutting required for 42" (107cm) door
G	43" to 48" (110cm to 122cm)	No cutting required for 48" (122cm) door

Recommended Rail

Stock sizes available - Narrow Design 8400 and 8500 Series Exit Devices. Minimum stile varies. Check product page. Rail sizes same as above. Consult Product Systems Manual for electric rails.

Packaging

Product	Avg Wt	Case
Exit Device with Trim	15 lbs	1 ea
980 Mullion	18 lbs	1 ea
12-980 Mullion	40 lbs	1 ea
650A Mullion	18 lbs	1 ea

Notes For Prefixes

- All levers may be milled
- 31- Prefix requires extended lip strike on 8300, 8900 Series. Specify lip length
- SC- Prefix not available in 57- Prefix, all series
- SC- Prefix not available in 8375, 8376, 8976, 8904 ET, 8816, 8866, 16-8816, 16-8866

* Not available on PP/PR/SP/NB8700 or PP/PR/SP8600, or LP/LR/LS8600 Exit Devices

**16- Prefix not available with 56- prefix or AL- prefix

\+ Prefix not available with 10-, 22-, 60-, 63-SE, SC or 64- prefixes.

Prefixes Available

10	Signature System
10-UL	Signature, meets UL437 cylinder
11+	SARGENT XC Key System
12	UL Fire Label Exit Devices
14	Sliding bolt bottom case for 8700
**16	Cylinder lockdown feature
19	Pushbar without Lexan touchpad
21	Construction Keying Conventional, XC and Signature Series
22	Construction Keying Conventional Cylinders (Existing Systems Only)
23	ANSI flat lip strike (8300, 8900, including 12- Prefix)
*31	Panel inside, outside or door over 2-1/4" to 3-1/8" thick
36	6 Lobe security head screws
37	Spanner head screws
43	Flush End Cap
*53	Latchbolt monitoring switch
54	Internal micro switch in ET Control Except on PP, PR, SP, LP, LR and LS8600
55	Signal Switch in Rail
56	Remote Dogging/Latch Retraction
57	Delayed Egress (Magnet ordered separately)
58	Electric Dogging
*59	Electroguard®
60	Disposable Construction Core
63	SARGENT Removable Core cyl. Includes masterkeying, grand masterkeying
64	SARGENT Removable Construction Core cylinder
65-73	6 Pin Uncombinated Small Format Interchangeable Cores
65-73-7P	7 Pin Uncombinated Small Format Interchangeable Type Cores
70	Exit device to accept Small Format Interchangeable Cores - no core provided
72	Exit device to accept Small Format Interchangeable Cores with Construction Core provided
75	Warning inside, Abrasive strip on rail
76	Knurled Outside Lever
77	Warning inside and outside, abrasive strip on rail, abrasive coating on Lever
82	Keso Security Cylinder
83	Keso Security Removable Core Cylinder
84	Keso Security Removable Construction Core Cylinder
AL	Alarmed Exit
GL	Guarded Latchbolt for 8800
TL	SARGuide lighted touchpad
SC, SE	Exit Device furnished in Schlage C or E Keyway (specify)
SG	SARGuard - Antimicrobial clear powder coat
VA, VC, VS, VCVS	SARGENT V-10 Cylinders See V-10 Cylinder Section
TL	SARGuide Illuminated Exit Device

Cover Dimensions and Touchbar Projections

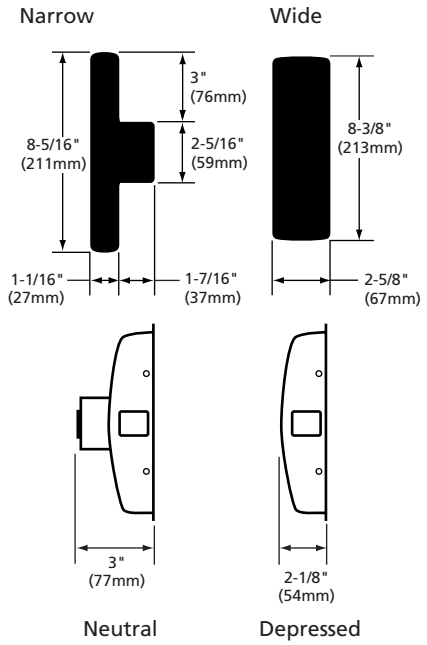

SARGENT
1-800-727-5477
www.sargentlock.com

2.01 EXIT DEVICES

A. Exit devices shall be 80 Series push rail devices as manufactured by SARGENT Manufacturing Company, New Haven, CT.

B. Exit devices shall be certified to meet or exceed the requirements of ANSI/BHMA A156.3 Grade 1.

C. Exit devices shall be listed by Underwriters Laboratories for panic and bear the UL label for life safety in full compliance with NFPA 80 and NFPA 101. Exit devices for fire labeled doors shall be UL listed as "Fire Exit Hardware".

D. Provide standard hex key dogging on non fire-rated exit devices, with cylinder dogging (i.e., SARGENT 16- prefix) as an option.

E. Exit devices shall comply with UL10C and UBC 7-2 positive pressure requirements.

F. Construction:

1. Chassis shall be of heavy duty cast design with one piece drawn nonferrous removable covers matching the material of the push and mounting rails.
2. Stamped steel chassis are not acceptable.
3. Mounting rails shall be formed from a solid single piece of stainless steel, brass or bronze no less than 0.072 inches thick.
4. Push rails shall be constructed of 0.062 inch thick material in the same manner as the mounting rail. Painted or anodized aluminum shall not be considered heavy duty and are not acceptable.
5. Provide protective Lexan touchpad on the exit device push rail to prevent scratches and serve as a visible guide to the user.
6. Metal end caps shall be formed from the same base metal as the push and mounting rails.

G. Exit devices shall have a maximum of 3 inches projection from the face of the door in the non-dogged position. When in the dogged position, the device shall have no more than a 2-1/8 inch projection from the door face.

H. The design of the exit device shall eliminate the necessity of removing the device from the door for standard maintenance or keying changes.

I. The device chassis shall be mounted and operable without the need of the rail or the chassis cover.

J. Trim shall be thru-bolted.

K. Devices shall be available with matching trim for both wide and narrow stile doors, including electrified functions when required.

L. Exit device operating lever trim shall withstand 1000 inch pounds of torque without allowing access.

M. Lever trim shall be available in architectural finishes and designs to match that of the locksets specified.

N. Exit devices shall have a five year limited warranty.

Checklist for ordering 80 Series Exit Devices

Indicate the following door and frame information:

1. Whether single doors or pair of doors with mullion or pair of doors without mullion.
2. Door and frame material.
3. Dimensions: (a) door opening width; (b) stile width; (c) door thickness; (d) stop height
   Example: Single door x hollow metal frame 3'0" x 5" x 2-1/4" x 1/2" (914mm x 127mm x 57mm x 13mm)
4. If Vertical Rod Device, also indicate: (a) door opening height; (b) threshold height (c) if no threshold information is used, so state; (d) unless threshold information is indicated, exit device will be furnished for use without threshold.
5. In ordering mullions (if other than stock 96" [2438mm] height) indicate height from finished floor to underside of stop.

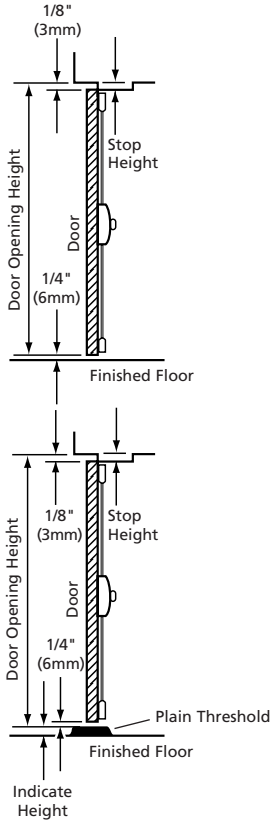

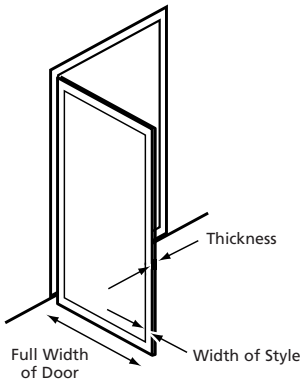

Hand

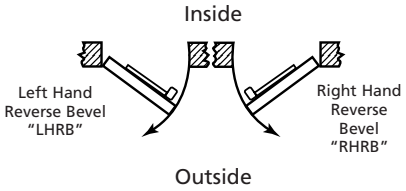

Finishes

SARGENT	Description	BHMA	Material
P	Primed for paint	600	Steel
3	Bright brass, clear powder coat	605	Brass
4	Dull brass, clear powder coat	606	Brass
9	Bright bronze	611	Bronze
10	Dull bronze, clear powder coat	612	Bronze
10B	Antique bronze, oiled	613	Bronze
20D	Statuary bronze, dark	—	Bronze
26	Bright chrome	625	Brass
26D	Dull chrome	626	Brass
32	Bright stainless	628	Stainless steel
32D	Dull stainless	630	Stainless steel
CPC	Clear powder coat over 32D stainless steel		

Mounting Heights

- 41" (1041mm) from finished floor for standard application
- 38" (965mm) from finished floor for elementary schools

How To Order

Specify	Note	Example
Prefix	Fire Rated	**12-**
Application	Single or Pair (as needed)	12-**SP**
Series	See Devices	12-SP**8600**
Size	Add suffix to device, see General Info	12-SP8600**F**
Function/Trim	See Functions chart	12-SP8600F **ETL**
Thru-bolt	TB	12-SP8600F ETL **x TB**
Hand	LHRB	12-SP8600F ETL x TB **x LHRB**
Finish	See Table	12-SP8600F ETL x TB x LHRB **x 26D/32D**
Size (width)	42"	12-SP8600F ETL x TB x LHRB x 26D/32D **x 42"**
Size (height)	96"	12-SP8600F ETL x TB x LHRB x 26D/32D x 42" **x 96"**
Door Number	120	12-SP8600F ETL x TB x LHRB x 26D/32D x 42" x 96" **Dr. 120**

80 Series Exit Devices
Guide For Proper Care Of Finishes

SARGENT
1-800-727-5477
www.sargentlock.com

The following guidelines should be referenced regularly and as required for proper appearance and longevity of finish.

Finish	Description	Use	Avoid
3	Bright brass, clear powder coat	Mild non-abrasive detergent with damp cloth or sponge	Abrasive cleaners, bleach solvents, steel or bronze wool
4	Dull brass, clear powder coat	Mild non-abrasive detergent with damp cloth or sponge	Abrasive cleaners, bleach solvents, steel or bronze wool
9	Bright bronze	Mild non-abrasive detergent with damp cloth or sponge	Abrasive cleaners, bleach solvents, steel or bronze wool
10	Dull bronze, clear powder coat	Mild non-abrasive detergent with damp cloth or sponge	Abrasive cleaners, bleach solvents, steel or bronze wool
10B	Antique bronze, oiled	Lemon oil polished with dry cloth	Abrasive cleaners, bleach solvents, steel or bronze wool
10BL	Oxidized satin bronze-lacquered	Mild non-abrasive detergent with damp cloth or sponge	Abrasive cleaners, bleach solvents, steel or bronze wool
15	Satin nickel plate	Mild non-abrasive detergent with damp cloth or sponge	Abrasive cleaners, bleach solvents, steel or bronze wool
20D	Statuary bronze, dark	Mild non-abrasive detergent with damp cloth or sponge	Abrasive cleaners, bleach solvents, steel or bronze wool
26	Bright chrome	Mild non-abrasive detergent with damp cloth or sponge	Abrasive cleaners, bleach solvents, steel or bronze wool
26D	Dull chrome	Mild non-abrasive detergent with damp cloth or sponge	Abrasive cleaners, bleach solvents, steel or bronze wool
32	Bright stainless steel	Mild non-abrasive detergent with damp cloth or sponge	Abrasive cleaners, bleach solvents, steel or bronze wool
32D	*Dull stainless steel	Plastic pad or bronze wool	Cleaners, solvents, bleach, steel wool

*To avoid discoloration and pitting:

- Keep stainless steel away from contact with other metals
- Avoid cleaning with mineral acids or chlorine products
- Avoid cleaning with abrasive products like sandpaper or steel wool

To maintain the finish:

- Remove any contamination before damage occurs
- Protect with a metal polish or car wax

CPC – Clear Powder Coat

For use in pool areas, offshore applications and highly corrosive applications, the clear powder coat eliminates need for cleaning and maintenance of finish. Applied over 32D only.

ESSEX™
THE TOTAL OPENINGS PEOPLE

SARGENT Manufacturing Company • 100 Sargent Drive • P.O. Box 9725 • New Haven • CT 06536-0915
Phone: 800-727-5477 • Fax: 888-863-5054 • Web site: www.sargentlock.com
SARGENT of Canada • Phone: 905-940-2040 • Fax: 905-940-3242 • Web site: www.sargentcanada.ca

Founded in 1864, SARGENT® is a market leader in locksets, cylinders, door closers, exit devices, electro-mechanical products and access control systems for new construction, renovation and replacement applications. The company's customer base includes commercial construction, institutional and industrial markets.

The ASSA ABLOY Group is the world's leading manufacturer and supplier of locking solutions, dedicated to satisfying end-user needs for security, safety and convenience.