PSM.2004-2.24 4/28/04 10:52 AM Page 1

SARGENT®

Product Systems Manual

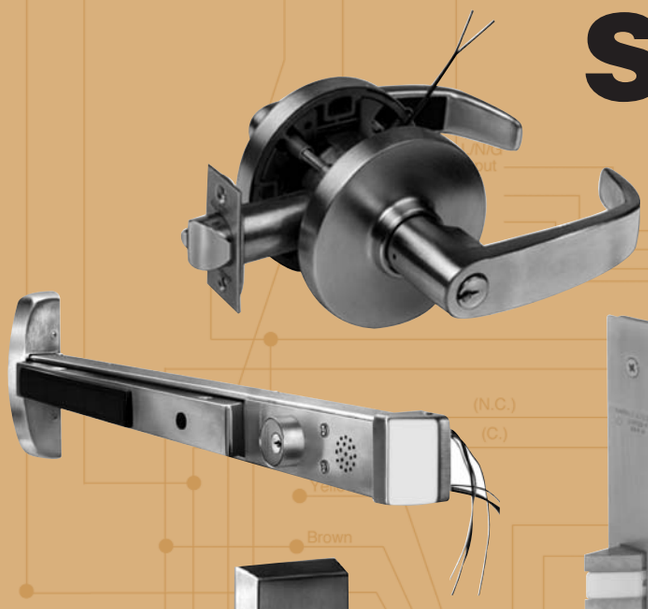

59-8804
Rim Exit Device

An ASSA ABLOY Group company

ASSA ABLOY

Product Systems Manual

SARGENT
1-800-727-5477
www.sargentlock.com

Table of Contents

Exit Alarms 1
Alarmed Exit Hardware 2-3
Latch Monitor (53-) & Signal Switch (55-) 4
Latch Retraction (56-) 5
Delayed Egress (57-) 6
Electric Dogging (58-) 7
Electroguard® (59-) Delayed Egress 8-9
Universal Controller. 10
80 Series Exit Functions & Trim Designs. 11-12
Electromechanical Outside Trim 13
Cylindrical Locks Electromechanical 14
Keypad 10 Line (KP10G77). 15
Mortise Locks Electromechanical. 16
Keypad Mortise Locks (KP8200). 17
Keypad Exit Device (KP8800/8900) 18
Profile Series v.G1 Stand-Alone Access Control Products 19-21
Monitoring Accessories 22
Control Accessories 24-25
MPower Low Energy Door Operator 26
Overhead Concealed Door Closer 268 CSPS/268 CSPD. 27
351 EHT/EHTD Electromechanical Closer-Holder Release Devices. 28
Fire Guard® Closer-Holders. 29-30
Electromagnetic Door Holders. 31
Electromagnetic Locks & Accessories. 32
Power Supplies & Accessories 33
Power Supplies & Power Transfer 34
Sample Application. 35
System Worksheet 36
General Ordering Information 37

An ASSA ABLOY Group company

ASSA ABLOY

Product Systems Manual
540/550 Series Alarms

SARGENT
1-800-727-5477
www.sargentlock.com

The 540 and 550 Series alarms are equipped with a horn which is activated by unauthorized egress or the removal of the cover. The horn, once activated, will sound for two minutes, then shut off automatically and re-arm itself.

Features of 540/550 Alarms

- Cover and base are nonferrous alloys
- 1-3/4" thick standard 4" minimum stile width
- Adapter plate available for narrow stile doors (3273)
- Solid state circuitry
- 9 volt alkaline battery (included)
- 110dB horn max. operating @ 85dB @ 5 ft.
- Units can be armed or disarmed from outside by Rim cylinder (ordered separately)
- Current draw 100mA
- Red flag indicates armed condition
- Key inside arms or disarms unit. Mortise cylinder furnished standard
- Finishes 10, 10B, 26, 26D, PEN, PEB, ERD, and PEAB
- UL Listed Miscellaneous Fire Door Accessory

Features of 540 Only

- Push-button provided to determine available battery power

Features of 550 Only

- Delay Feature in unit allows authorized exit for 12 seconds after activation without sounding alarm. The horn, once activated, will sound for two minutes, then shut off and automatically re-arm itself after 15 seconds
- Red LED alarm light makes any violation visible. LED continues to flash beyond two minute alarm cycle. LED light and alarm can be turned off by key operation. Turning key clockwise, then counterclockwise will clear memory and re-arm unit
- Low battery alert. Horn will “chirp” on an intermittent basis
- Optional remote power (91-prefix). Requires 3267 Power Supply
- Optional remote monitor (92-prefix)
- Optional continuous alarm (93-prefix). Alarm sounds until reset by key. Remote power is suggested with this option.
- Optional automatic re-arming (94-prefix)

Application Diagrams

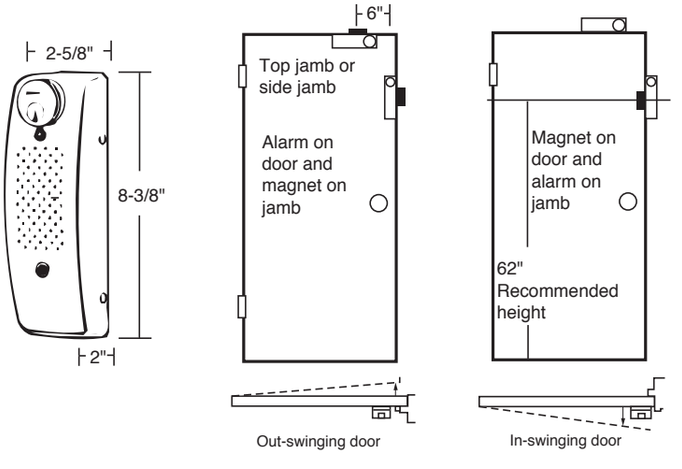

How to Order

Specify	Note	Example
Prefix	Remote Power	**91-**
Prefix	Continuous Alarm	91-**93**
Series	Alarm Unit	91-93-**550**
Finish	Finish	91-93-550-**10**

Product Systems Manual
Alarmed 80 Series Exit Devices (AL Prefix)

SARGENT
1-800-727-5477
www.sargentlock.com

Application

SARGENT's AL-80 Series Exit Devices are designed for areas requiring a stand-alone alarm on outward swinging doors. This device has an integrated alarm in the push rail to discourage the unauthorized use of emergency exit doors. The alarm inside the rail sounds immediately upon exit. The AL-80 Series is ideal for rear exterior doors, doors leading to a rooftop, or anywhere security is a concern.

Features

- Available for most 80 Series Exit Devices*
- Dogging standard on non fire-rated
- All exit devices have tamper resistant latching (deadlocking)
- Microprocessor based alarm board
- When armed, alarm sounds immediately upon rail depression
- Free entry allowed based on outside trim being used
- All trim designs available. See 80 Series catalog
- Battery powered – 9VDC
- 546 wiring harness option provides remote alarm reset, external inhibit, remote power and remote monitor
- 103 Db @ 8 Ft pulsating horn
- Flashing red LED provides visible violation indication, reset by key only
- Low battery alert
- Field selectable continuous alarm option- 3267 Power Supply and 546 Harness Recommended
- Automatic re-arming option (field changeable). Switch returns to "on" position after removal of key.
- UL Listed
- UL Listed to Canadian Safety Standards

*Not available for LP/LR/LS8600

Retrofit Kits For 80 Series "AL"

Provides convenience of retrofitting the AL prefix to existing 80 Series Exit Devices. Available for 8300, MD/WD8600, GL8800, and 8900 only.

Kit No.	Description
545-1	80 Series "F" Wide 36"
545-2	80 Series "F" Narrow 34"- 36" 80 Series "E" Narrow 32"
545-3	80 Series "G" Wide 48"- 43"
545-4	80 Series "G" Narrow 48"- 43" 80 Series "J" Wide 42"- 39"
545-6	80 Series "J" Narrow 42"- 38"

546 Wiring Harness

Harness allows remote options to be used with the "AL" alarmed exit device

- Remote Alarm Reset–reset from remote location
- External Inhibit – shunts alarm from remote location
- Remote Power – allows unit to be wired to a 9VDC power supply (3267)
- Remote Monitor – allows unit to be wired to remote console

How to Order

Specify	Note	Example
Prefix	Alarmed Exit	**AL**
Series	80 Rim	AL-**88**
Function	Key retracts latch	AL-88**04**
Trim	Lever design	AL-8804 **ETJ**
Hand	LHRB	AL-8804 ETJ **LHRB**
Finish	Satin Brass	AL-8804 ETJ LHRB **US4**
Door Size	Width	AL-8804 ETJ LHRB US4 **36"**

Minimum Door size is 34"

Product Systems Manual
5100/5800 Alarmed Exit Hardware

SARGENT
1-800-727-5477
www.sargentlock.com

The 5100 alarmed exit locks and the 5800 alarmed exit devices feature a dual frequency pulsating-type horn. The horn is activated by any unauthorized latch movement, unauthorized egress, or removal of the cover. The horn, once activated, will sound for two minutes, then shut off and automatically re-arm itself.

Features of 5100/5800

- Cover, and chassis are nonferrous alloys
- 1-3/4" thick door standard with 4-1/2" stile
- Adapter plates available for narrow stile doors (3274/3275)
- Reversible. Packed RHRB
- 641 strike standard
- 9 volt alkaline battery (included)
- A 12 second delay feature allows the alarm to be activated while the door is open permitting a person to pass through the door without sounding the alarm
- 110dB horn maximum, operating @ 85dB @ 5 ft
- A red LED alarm light flashes indicating violation occurred. LED will continue to flash beyond alarm cycle indicating where violation occurred. LED light turned off by inside key operation only
- Optional remote power (91-prefix) Requires 3267 power supply
- Optional remote monitoring (92-prefix)
- Optional continuous alarm (93- prefix). Alarm sounds until reset by key. Remote power is suggested with this option.
- Optional automatic re-arming (94-prefix)
- Finishes: 10, 10B, 32, 32D, PEN, PEB, ERD, EAB

Features of 5800 Only

- UL Listed for Panic (5800 - FVSR)
- UL Listed for Fire (12-5800 - GXHX)

Features of 5100 Only

- Paddle, cover, and chassis - non ferrous alloy
- UL Listed for exit lock (5100 - FUQV)

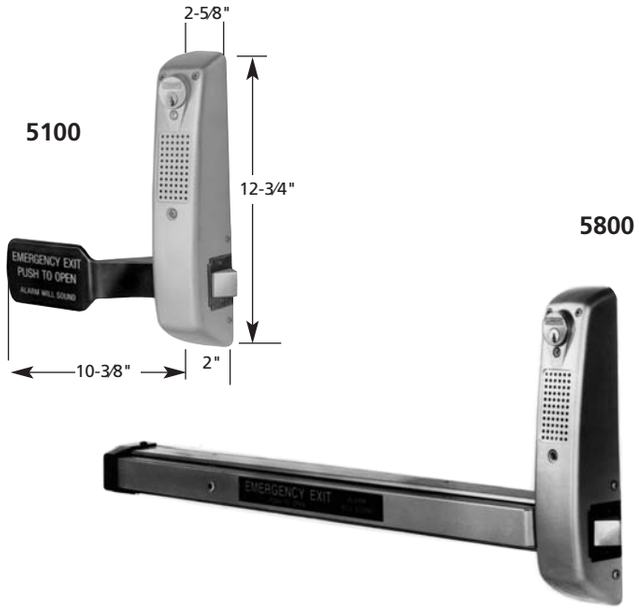

Trims Available

28-K-LL

"04" Function

28-D-LL

"10" Function

28-C-LL

"13" Function

28-L-LL

"15" Function

28-K-GTB

"04" Function

28-E-GTB

"10" Function

28-D-GTB

"10" Function

How to Order

Specify	Note	Example
Prefix	Fire Label	**12-**
Series	Product Line	12-**5800**
Function	Key retracts latch	12-58**04**
Trim	Specify	12-5804 x **GTB**
Finish	Specify	12-5804 x GTB x **PEN**
Door Width	Specify	12-5804 x GTB x PEN x **42**

Product Systems Manual
(53- Prefix) Latch Monitor
(55- Prefix) Signal Switch

SARGENT
1-800-727-5477
www.sargentlock.com

Signal switch options for the 80 Series Exit Devices allow for independent monitoring of the push rail or latch. These switches may be used to detect egress or tampering, sound an alarm, signal a remote location or de-energize an electromagnet.

Features

- Available for most 80 series exit devices:
  Rim, mortise, surface vertical rod and concealed vertical rod
- Switch type SPDT form "C" contacts
- 30 VDC @ 2 Amp. maximum rating
- All wires run through rail
- Exit devices UL and cUL Listed for Panic and Fire (12-)

53- Prefix Latch Monitor Switch

The latch monitor provides true, tamper resistant latch monitoring and not just rail movement sensing. The monitor switch is activated when the rail is depressed or there is actual movement of the latch.

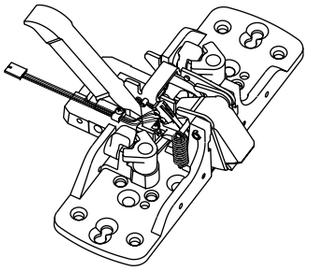

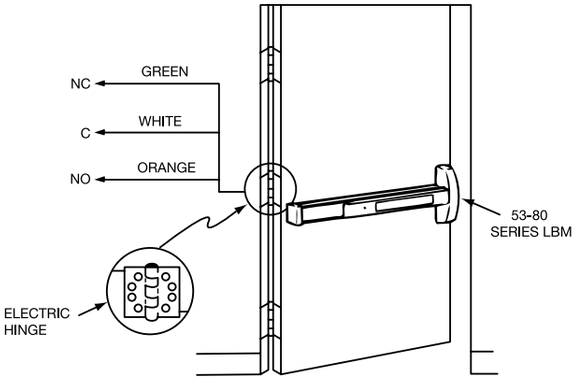

- Compatible with most 80 Series mechanical functions
- Can be combined with the following electrical functions:
  55-, 56-, 55-56-, 57-, 58- and AL-
- Standard with 59- Delayed Egress Electroguard
- Not available as field installed kit
- Not available with following prefixes: PP-, PR-, SP-, LP-, LR-, LS- or NB-

55- Signal Switch

The signal switch monitors the push rail position and is activated when the push rail is depressed.

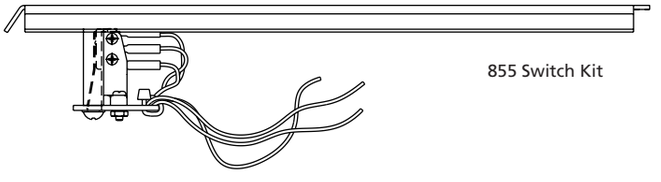

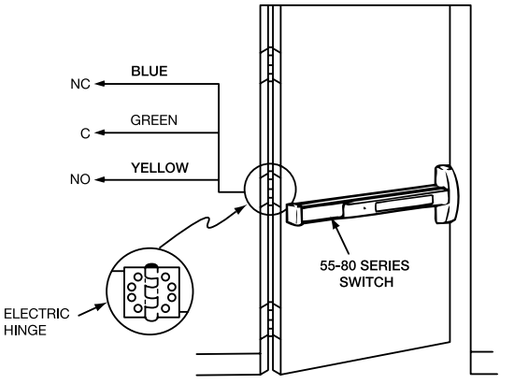

- Compatible with all 80 Series mechanical functions
- Can be combined with following electrical functions: 53- and 58-, 56- factory installed only
- Available as 855 field installed switch kit

855-1	"F" wide rail
855-2	"F" narrow or "E" wide rail
855-3	"E" narrow or "G" wide rail
855-4	"G" narrow rail

55-8895 Active Push Bar

Rail assembly furnished with 55- signal switch and no latching mechanism on exit device.
Used for release of electromagnetic lock or egress signaling.

Product Systems Manual
56- Prefix Latch Retraction

SARGENT
1-800-727-5477
www.sargentlock.com

With SARGENT remote latch retraction, the exit device may be unlocked from a remote location by electrically dogging the push rail. This is done with a motor located in the push rail that quietly and quickly pulls in the push portion of the rail, unlocking and retracting the latches. The door then functions in a push/pull manner. Use of an electric motor in place of a solenoid allows for smooth, quiet operation ideal for low noise locations such as conference rooms, operating theaters and libraries.

Door latches may be retracted in this manner for momentary ingress or egress and is commonly used for door unlatching with an automatic door operator. 56-80 exit devices can be dogged continuously even on fire rated devices that are tied into the building fire detection system. When de-energized, the push is released and extends, relocking the latches.

These features make the 56-80 exit devices desirable on schools, offices, department stores or private buildings where multiple openings have changing accessibility requirements throughout the day.

Features

- Available for all 80 Series exit devices
- Motor driven latch retraction for smooth, quiet operation
- Power Requirements: 24VDC Regulated/Filtered Power Supply (3510 or 3530)
- Normal operation: .450 Amp., low inrush current
- Power supplied through continuous circuit hinge
- Can be used for continuous and intermittent use
- UL Listed for Class II Circuitry
- Available for panic and fire exit hardware (12-)
- Manual dogging available upon request for non fire-rated devices
- Optional signal switch (55-) available with (56-). Used with door operator or to monitor push rail status (55-) by signaling monitor panel indicating when unit is dogged/undogged
- Use for Authorized Entry and Door Status systems

Application Diagram

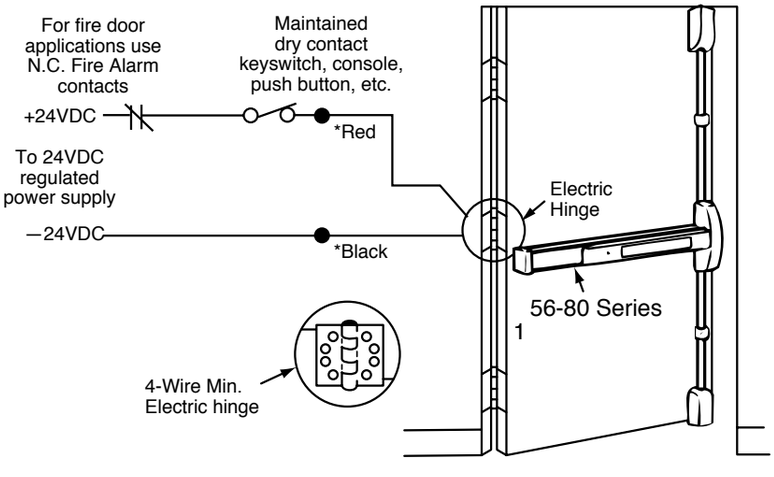

Accessories for System Design

- 3510, 3530 Series or 3560 Power Supply
- 4370 Keyswitch; 4291/4292 Keypad
- 4414/4418 Series Remote Monitoring Console
- 3287 Door Status Switch
- 881 Monitor Strike
- 4241 Push Button Switch (momentary)

Trim Suggestions

Consult 80 Series Catalog for trim designs

Suggested Architectural Specifications

- Unit must be motor driven
- Push rail must be depressed when latch is not engaged in strike
- Unit must act as a push/pull until de-activated by fire alarm

How to Order

Specify	Note	Example
Prefix	Fire Labeled Latch Retraction	**12-56-**
Series	Mortise Exit	2-56-**89**
Function	Key retracts Latch	12-56-89**04**
Trim	Thumbpiece	12-56-8904 **PTB**
Finish	Specify	12-56-8904 PTB x **US3**
Hand	Specify	12-56-8904 PTB x US3 **LHRB**
Door	Specify Width	12-56-8904 PTB x US3 x LHRB x **40"**

See "General Information" for minimum door sizes.

Product Systems Manual
57- Prefix Delayed Egress

SARGENT
1-800-727-5477
www.sargentlock.com

Schools, nursing homes, shopping centers and libraries are required by fire and life safety codes to provide readily available egress in case of emergency. These requirements, while adding to the safety of the building, compromise the building's security.

The 57-80 Series delayed action exit device will sound a horn at the door indicating that a violation is about to occur. Once actuated, the 80 Series exit device will signal the 1584 Electromagnetic Lock keeping the door closed for fifteen seconds. This time delay allows time to respond to a pending violation.

Features

- Available for most 80 Series Exit Devices: rim, mortise, vertical rod and concealed vertical rod
- Depressing the push rail for two seconds or longer initiates an irreversible alarm until disarmed with key
- Alarm rail sounds for fifteen seconds during an unauthorized egress. After fifteen seconds electromagnetic lock releases
- Audible and visual indicators advise door lock status
- 80dB horn enclosed in rail assembly
- Size 41 mortise cylinder, located in mounting rail insert provides momentary or maintained egress with key
- Momentary time delay adjustable from 0-30 seconds. Preset for five seconds at factory
- Device works in conjunction with electromagnet. (Ordered separately)
- Emergency decal provided, "Emergency Exit Only. Push until alarm sounds. Door can be opened in 15 seconds."
- When unit is installed with building's fire alarm system, a relay in the delayed action circuit voids delayed action cycle, allowing for immediate egress
- Conforms to NFPA 101, Special Locking Arrangements
- UL Listed for Panic and Fire (12-)
- Power supplied through continuous circuit hinge; (4 -wire minimum). Eight wire recommended when used with fire alarm
- Power requirements: 24VDC Regulated/Filtered Power Supply (3510/3530) Current draw: .25 amp with electromagnetic lock (1584)

Accessories for System Design

- 54-700 ET Control
- 881 Monitor Strike
- 1584 Electromagnet
- 3287 Door Status Switch
- 3510, 3530 Series or 3560 Power Supply
- 4371 LT Keyswitch
- 4291 or 4292 Keypad

Application Diagram – 57-80 Series

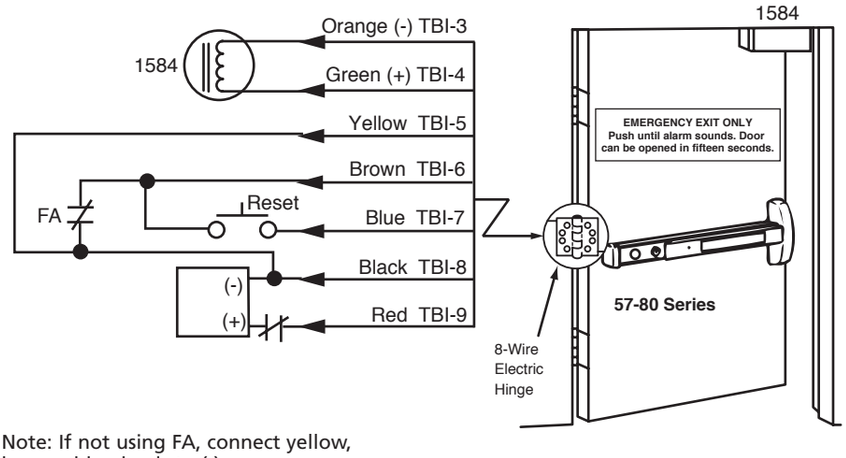

Note: If not using FA, connect yellow, brown, blue leads to (-).

How to Order

Specify	Note	Example
Prefix	Delayed Egress	**57-**
Series	Rim Exit	57-**88**
Function	Key Locks/Unlocks Lever	57-88**13**
Trim	Lever Handle	57-8813-**ETA**
Finish	Specify	57-8813-ETA x **US4**
Hand	Specify	57-8813-ETA x US4 x **LHRB**
Door	Specify	57-8813-ETA
Width		x US4 x LHRB x **48" W**

See "General Information" for minimum door sizes.

57-Not available for LP/LR/LS8600, PP/PR/SP8600, or PP/PR/SP/NB8700 devices.

Product Systems Manual
58- Prefix Electric Dogging

SARGENT
1-800-727-5477
www.sargentlock.com

Libraries, auditoriums, theaters, courtrooms, churches and schools all benefit from the convenience of electric dogging (unlocking). When the 58-80 Series exit device is energized and the push rail is depressed, it will continuously hold the push rail down and the latch(es) will be held retracted. When device is de-energized or power is interrupted, the latch(es) will extend. This feature is ideal for areas which require silent operation of exit device hardware.

Features

- Available for all 80 Series rim, mortise, vertical rod, concealed vertical rod and center top latch
- Provides quiet ingress and egress when dogged
- Available for fire rated devices (12-)
- Power supplied through electric hinge
- Manual hex key dogging provided on non-fire rated devices
- UL Listed for Panic and Fire (12-)
- Power Requirements: 24VDC Regulated/Filtered Power Supply (3510/3530)
- Current draw: .2 amp.
- Holding force 70 lbs. min.

Accessories for System Design

- 3510, 3530 Series or 3560 Power Supply
- 4370 Key Switch
- 4291 or 4292 Keypads
- 881 Monitor Strike
- 3287 Door Status Switch

How to Order

Specify	Note	Example
Prefix	Electric Dogging	**58-**
Series	Vertical Rod Exit	58-**87**
Function	Exit Only	58-87**10**
Trim	Lever Handle	58-8710-**ETA**
Finish	Specify	58-8710-ETA x **US9**
Hand	Specify	58-8710-ETA x US9 x **LHRB**
Door Width	Specify	58-8710-ETA x US9 x LHRB x **42" W**
Door Height	Specify	58-8710-ETA x US9 x LHRB x 40" W x **84"H**

See "General Information" for minimum door sizes.

Application Diagram

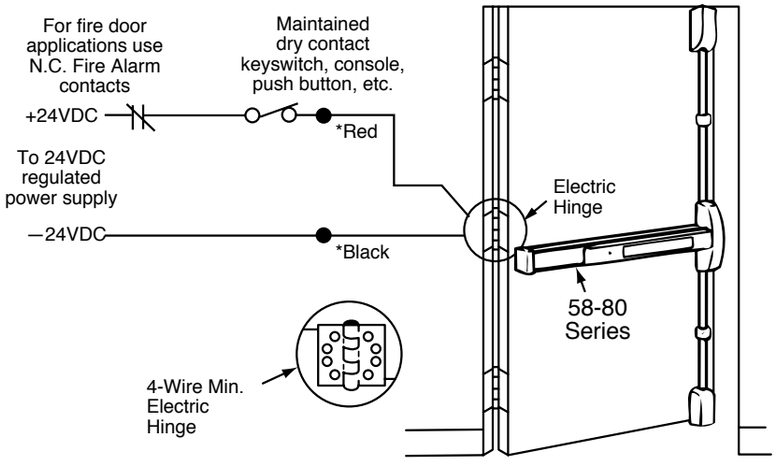

Product Systems Manual
59- Prefix Electroguard® Delayed Egress

SARGENT
1-800-727-5477
www.sargentlock.com

The Electroguard® Delayed Egress System is designed for use in 80 Series Exit Devices where a delay on egress is needed. Common applications include maternity wards, Alzheimer patient areas, psychiatric facilities and airports where security and life safety requirements must be balanced.

When armed by the cylinder in the rail assembly, if the push rail is depressed for more than one second the horn in the rail assembly will sound. During the next fifteen seconds, the push rail cannot be fully depressed, preventing egress. After fifteen seconds, the rail assembly unlocks and free egress is granted.

Depending on outside trim specified, free ingress is allowed for up to ten seconds. If the latch remains retracted for more than 10 seconds, the Electroguard® will go into an irreversible alarm condition. This feature prevents latch tampering.

Momentary release for egress (adjustable for 5, 10, 20 or 40 seconds) is provided by the rail assembly cylinder. For day use convenience, the system may be de-energized by placing in the maintained mode and then re-armed for the evening. Standard inputs allow the integration of the Electroguard® with a fire alarm system or used in combination with the following options: remote alarm, door position switch, external inhibit, voice output, latch status and gang release.

Features

- Available for most* 80 Series Exit Devices: rim, mortise, vertical rod and concealed vertical rod (MD/WD)
- Completely self-contained delayed egress system within the rail assembly
- Conforms to NFPA 101 Special Locking Arrangements
- Available in UL Listed Panic and Fire Rated (12-prefix) devices
- Available to comply with BOCA code relating to delayed egress. Specify BC- Prefix. Requires door status switch (3287) ordered separately
- Depressing the push rail for one second or longer initiates an irreversible alarm until disarmed by key in the rail assembly
- Standard fifteen second delay on egress, 30 seconds available with written permission of Authority having Jurisdiction
- When integrated with building's fire alarm system, a relay in the delayed action circuit voids the delay, allowing immediate egress
- Standard size 41 mortise cylinder in the rail assembly provides momentary or maintained egress with key
- Latch monitoring for rim and mortise type devices; rod monitoring for vertical rod devices

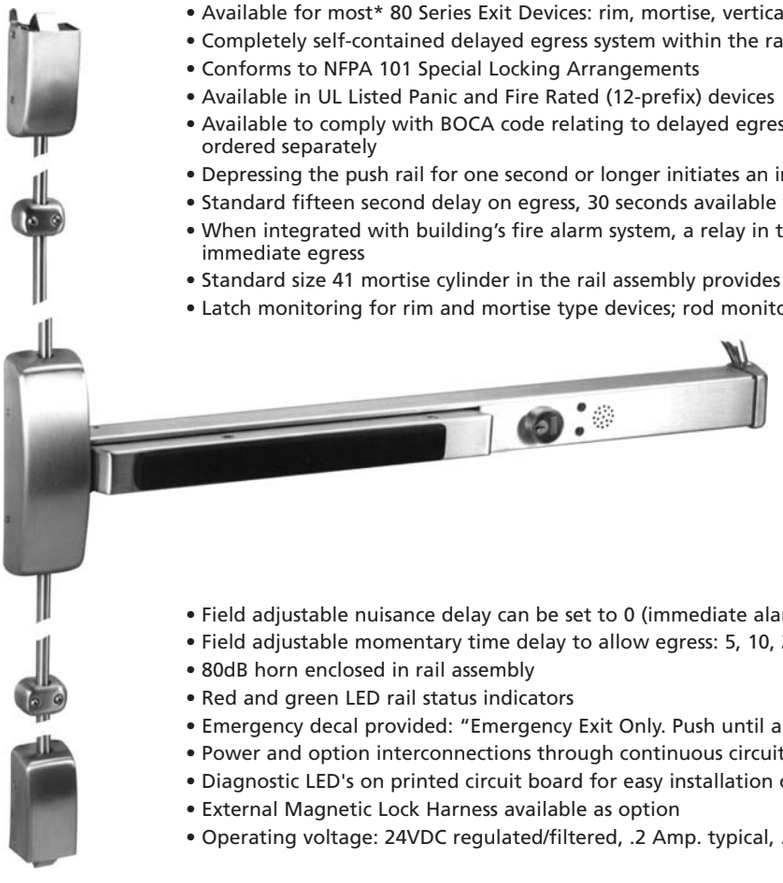

- Field adjustable nuisance delay can be set to 0 (immediate alarm) or 1 second (slight delay before alarm)
- Field adjustable momentary time delay to allow egress: 5, 10, 20 or 40 seconds
- 80dB horn enclosed in rail assembly
- Red and green LED rail status indicators
- Emergency decal provided: "Emergency Exit Only. Push until alarm sounds. Door can be opened in 15 seconds."
- Power and option interconnections through continuous circuit hinge (4 wire min. to 12 wire max.)
- Diagnostic LED's on printed circuit board for easy installation or troubleshooting
- External Magnetic Lock Harness available as option
- Operating voltage: 24VDC regulated/filtered, .2 Amp. typical, .5 Amp with voice module

Minimum rail length is 36" (914mm).
See 80 Series Exit Device catalog for mechanical functions and complete ordering information.

*59- Not available for LP/LR/LS8600, PP/PR/SP8600, or PP/PR/SP/NB8700.

Product Systems Manual
Electroguard Application with Options

SARGENT
1-800-727-5477
www.sargentlock.com

The following is a typical point to point wiring diagram for an Electroguard® application using a voice module (3071/3072), power supply (3510), keypad (4292), door position switch (3287) and remote horn (4380H) connected via a twelve wire electric hinge to the exit device.

This application provides manual access through the key in the outside trim and added security with the door status switch, which monitors the door position. The remote horn provides violation indication at a remote station with the voice module providing a local means of notification for the visually impaired. The keypad allows remote de-activation (the delayed egress portion of the Electroguard System).

3287 Door Status Switch

- Monitors door position remotely
- Required for BOCA prefix operation
- SPDT concealed switch (3 wire)
- Contacts rated .25 Amp @ 24 VDC
- Requires 1" diameter hole

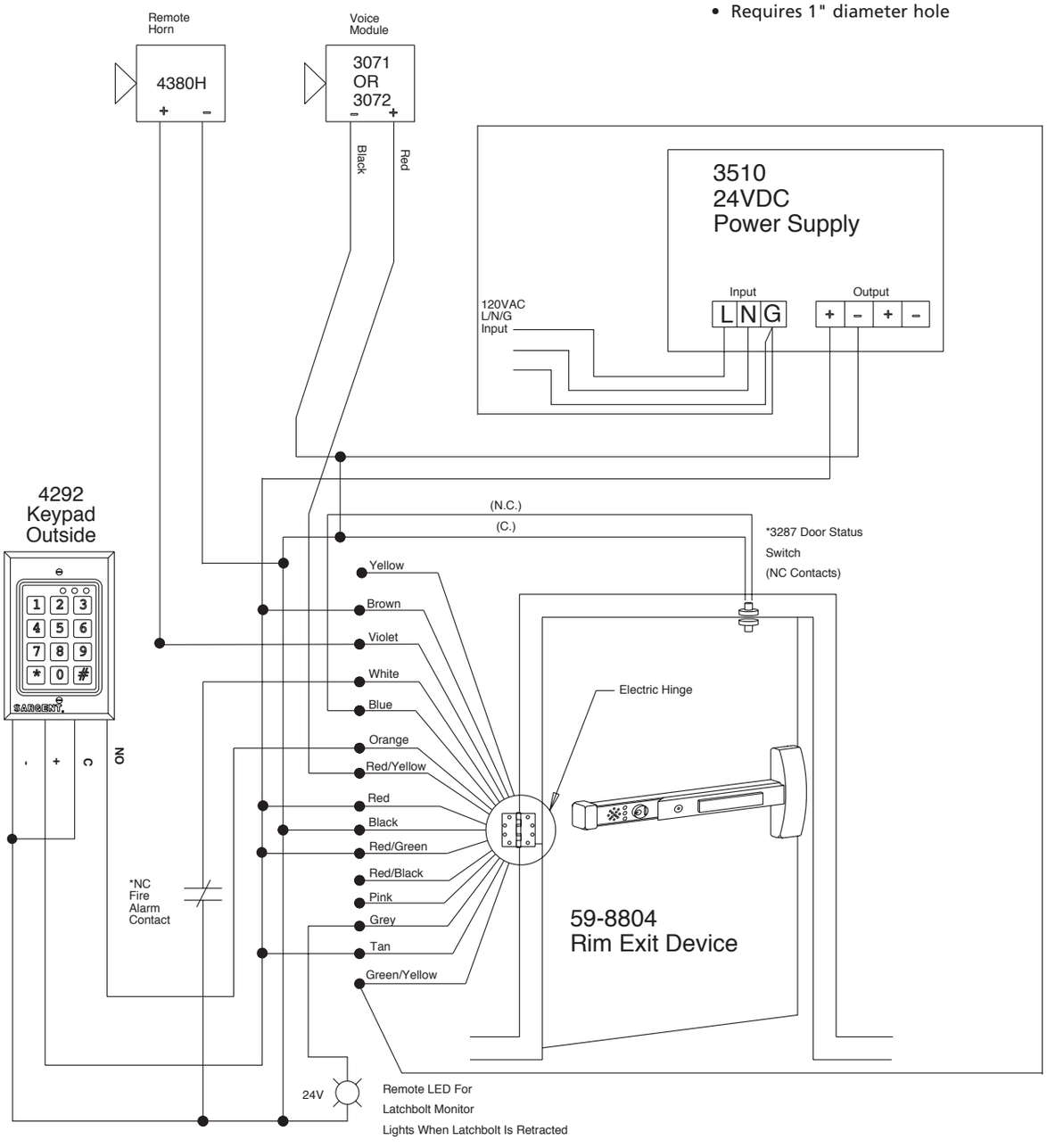

Product Systems Manual
Universal Controller System 3671

SARGENT
1-800-727-5477
www.sargentlock.com

Shopping centers, nursing homes, school auditoriums, and libraries are required by fire and life safety codes to provide readily available egress in case of emergency. The universal controller is a microprocessor based delayed egress system which can be monitored from a remote location through its outputs. The universal controller works in conjunction with an electromagnetic lock (1584), a key switch with horn and LEDs (4375LH), a 55-80 Series exit device, and power supply.

Features

- Available for all 80 series exit devices: rim, mortise, vertical rod, and concealed vertical rod (55- Prefix required)
- Depressing push rail for two seconds or longer initiates an irreversible alarm in the key switch (4375LH) until disarmed with key
- Alarm in key switch sounds for 15 seconds during an unauthorized egress. After fifteen seconds, electromagnetic lock (1584) releases
- Audible and visual indicators on key switch (4375LH) advise door lock status
- Momentary egress (10 seconds) allowed when key switch signals universal controller
- Conforms to NFPA 101 Special Locking Arrangements
- Emergency Decal: "Emergency Exit Only. Push until alarm sounds. Door can be opened in 15 seconds" provided
- Power requirements: 24VDC Regulated/Filtered Power Supply (3510, 24VDC, 1.8A, UL Class II)
- Current draw: 300mA unloaded, 1.5A maximum
- Steel Enclosure: 12" x 12" x 4"
- Available for custom design applications, consult factory
- UL Listed as a complete system

Application Diagram – 3671

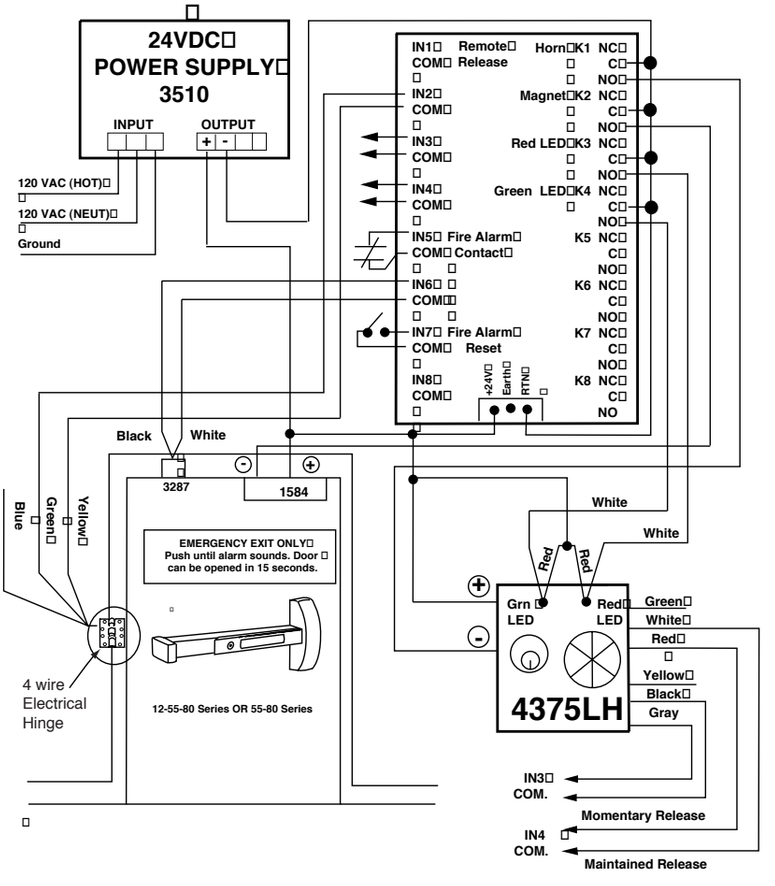

Required System Components

Specify	Note	How To Order
Signal Switch	Signal Switch Exit Device x function	55-8810 x 32D x 48"
Keyswitch	Key Switch, Two LEDs and Horn	4375LH x 32D
Electromagnetic Lock	Single or Double	1584 x finish
Power Supply	Regulated Filtered Power Supply	3510
Controller	Universal Controller	3671

Product Systems Manual
80 Series Exit Functions & Trim Design

SARGENT
1-800-727-5477
www.sargentlock.com

Operation	Function	STS, FLL, MAL, FLW avail.	A, E, F, J, L, P, W avail.	8300	12-MD8400 8400	8500	MD8600 WD8600	PP/PR/SP 8600/8700 LP/LR/LS 8600	8700	8800	8900
No outside operation Dummy trim available	10	8300, 8600, 8700, 8800, 8900 (including 12-)	710 ET x lever handle design	8310	8410 12-MD8410	8510	MD8610 WD8610	PP/PR/SP 8610/8710 LP/LR/LS 8600	8710	8810	8910
Key retracts latch	04	8300, 8800, 8900 (including 12-)	704 ET x lever handle design	8304	—	8504	—	—	—	8804	8904
Lever operates when key in cylinder and turned	06	—	706 ET x lever handle design	—	8406 12-MD8406	8506	MD8606 WD8606	PP/PR/SP 8606/8706 LP/LR/LS 8600	8706	8806	—
Key locks/unlocks ET	13	—	713 ET x lever handle design	8313	8413 12-MD8413	8513	MD8613 WD8613	PP/PR/SP 8613/8713 LP/LR/LS 8600	8713	8813	8913
No cylinder Trim operable	15	—	715 ET x lever handle design	8315	8415 12-MD8415	8515	MD8615 WD8615	PP/PR/SP 8615/8715 LP/LR/LS 8600	8715	8815	8915
Key outside retracts latch, Key inside locks or unlocks lever	16	—	—	—	—	—	—	—	—	8816	8916
Key retracts latch. Power off, unlocks thumb piece	70	8300, 8900 (including 12-)	—	8370	—	—	—	—	—	—	8970
Key retracts latch. Power off, locks thumb piece	71	8300, 8900 (including 12-)	—	8371	—	—	—	—	—	—	8971
Power off, unlocks lever	73	—	773 ET x lever handle design	—	8473 12-MD8473	8573	MD8673 WD8673	PP/PR/SP 8673/8773 LP/LR/LS 8600	8773	—	—
Power off, locks lever	74	—	774 ET x lever handle design	—	8474 12-MD8474	8574	MD8674 WD8674	PP/PR/SP 8674/8774 LP/LR/LS 8600	8774	—	—
Power off, unlocks lever. Key o/s retracts latch	75	—	775 ET x lever handle design	8375	—	—	—	—	—	8875	8975
Power off, locks lever. Key o/s retracts latch	76	—	776 ET x lever handle design	8376	—	—	—	—	—	8876	8976

Consult 80 Series Exit Device Catalog for additional trims and functions.

Product Systems Manual
Freewheeling Trim Designs

SARGENT
1-800-727-5477
www.sargentlock.com

The Freewheeling Trim is designed for areas that are susceptible to vandalism including schools, universities, public buildings, back doors of businesses and any exterior doors where excessive or abusive force might be applied to the lever handle trim.

This design allows the outside lever handle to swing freely, down to 70°, in the locked mode. Trim reset after vandalism is not necessary; the lever automatically returns to its original position.

	8300 12-8300 ANSI Type 10	8400 12-MD8400 ANSI Type 6	8500 ANSI Type 4	MD8600 12-MD8600 ANSI Type 8	WD8600 12-WD8600 ANSI Type 7	PP/PR/SP8600 12-PP8600 12-PR8600 12-SP8600
40 **No outside operation. Lever rotates**	740 ET	740-4 ET	740 ET	740-4 ET	740-4 ET	740-6 ET
43 **Key engages or disengages**	743 ET	743-4 ET	743-5 ET*	743-4 ET	743-4 ET	743-6 ET
44 **Key retracts latch. Lever rotates**	744 ET		744 ET			
46 **Operates only when key is in cylinder and turned. Key engages lever to retract latch**		746-4 ET		746-4 ET	746-4 ET	746-6 ET

	HC8700 12-HC8700 8700 12-8700	HC8800 12-HC8800	PP/PR/SP8700 12-PP8700 12-PR8700 NB8700 12-NB8700	8800 ANSI Type 1	8888 12-8888 ANSI Type 1	8900 12-8900 ANSI Type 3
40 **No outside operation. Lever rotates**	740 ET	740 ET	740 ET	740 ET	740 ET	740 ET
43 **Key engages or disengage**	743 ET	743-8 ET**	743-8 ET**	743 ET	743-8 ET**	743 ET
44 **Key retracts latch. Lever rotates**		744 ET		744 ET	744 ET	744 ET
46 **Operates only when key is in cylinder and turned. Key engages lever to retract latch**	746 ET	746-8 ET	746-8 ET	746 ET		

* Includes spindle adapter 68-3672
** Includes spindle adapter 68-3671

Product Systems Manual
Electromechanical — Outside Trim (ET)
For Exit Devices

SARGENT
1-800-727-5477
www.sargentlock.com

Electromechanical ET Lever Handle Controls

Provides remote means of locking or unlocking a door for authorized entry, access control, security or safety needs when used in conjunction with an 80 Series exit device. All controls require 1/4 amp (.25) @ 24VDC regulated/filtered power (3510, 3530 Series, 3560) or 24VAC rectified. Rectifier packed with each device for 24VAC operation. If voltage exceeds 26.2 R.M.S. solenoid will be damaged.

Controls 773/774

- For use with 8400, 12-MD8400, 8500, MD8600, 12-MD8600, WD8600, 12-WD8600, 8700 and 12-8700
- No cylinder override
- Lever is unlocked when power is off – Fail Safe (773)
- Lever is locked when power is off – Fail Secure (774)
- Field reversible

Controls 775/776

- For use with 8300, 12-8300, 8800, 12-8800, 8900 and 12-8900
- Key from outside retracts latch mechanically
- Lever is unlocked when power is off – Fail Safe (775)
- Lever is locked when power is off – Fail Secure (776)
- Field reversible

54 Prefix for 700 ET Controls

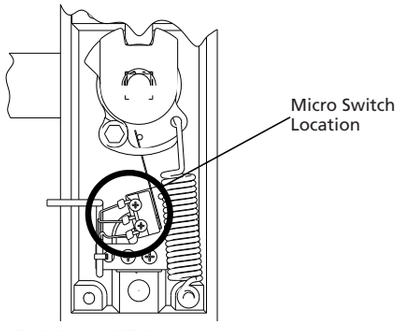

The 700 Series ET Control with an internal micro switch is available for use with any 80 or 90 Series exit device which accepts (700) active trim that retracts the latch(es) **except** on 8400, 8500, MD8600, WD8600, PP8600, PR8600, SP8600, PP8700, PR8700, and SP8700.

- Can be used to signal activation of outside lever handle to remote location
- Can be used to de-energize electromagnetic lock
- Not available with Freewheeling ET Trim

How To Order Trim Separately

Example:	Order:
For an MD8674 ETL X RHRB X 26D/32D	774-4 ETL x RHRB x 26D
For an 8876 ETL X LHRB X US3	776 ETL x LHRB x US3

Product Systems Manual Electromechanical Cylindrical Locks

SARGENT
1-800-727-5477
www.sargentlock.com

Solenoid operated locks for use with labeled 1-3/4" thick doors. Solenoid requires 24VDC @ .25 amp Regulated/Filtered Power (3510, 3530 Series and 3560) or 24VAC Rectified. All solenoids are UL tested for cycle life, low operating temperature and shock and fire hazard qualifications. Designed for intermittent and continuous duty. If voltage exceeds 26.2 R.M.S., solenoid will be damaged.

10 Line Levers

10 Line locks available in B, J, L or P lever designs.

10G70	• Power off unlocks outside lever • Inside lever always free • Key outside retracts latch when locked • Guardbolt deadlocks latch • Fail safe
10G71	• Power off locks outside lever • Inside lever always free • Key outside retracts latch when locked • Guardbolt deadlocks latch • Fail secure – intermittent duty

Note: Locks (10 line) may be modified with switch to monitor inside or outside lever handles, signal remote location, or de-energize electromagnetic lock.

8 Line Knobs

Solenoid operated locks in 8 line require the L or G rose for wood door applications. They are available with standard core cylinder.

8G70	• Power off unlocks outside knob • Inside knob always free • Key outside retracts latch when locked • Guardbolt deadlocks latch • Fail safe
8G71	• Power off locks outside knob • Inside knob always free • Key outside retracts latch when locked • Guardbolt deadlocks latch • Fail secure – intermittent duty
8G74	• Outside knob always rigid • Power off unlocks inside knob • Key inside or outside retracts latch • Guardbolt deadlocks latch • Fail safe – Asylum
8G75	• Outside knob always rigid • Power off locks inside knob • Key inside or outside retracts latch • Guardbolt deadlocks latch • Fail secure – Asylum– intermittent duty

How to Order

Specify	Note	Example
Series	10 Line	**10**
Function	Fail Safe	10G**70**
Trim	Rose/Lever	10G70 **LP**
Finish	Specify	10G70 LP x **US3**

Product Systems Manual KP10G77 Keypad Operated Cylindrical Lock

SARGENT
1-800-727-5477
www.sargentlock.com

The SARGENT Keypad Cylindrical Lock is designed for areas which require authorized entry. It is a self contained microprocessor controlled lock with non volatile memory. The non volatile memory insures codes will not be lost even if the batteries stop functioning. The cylindrical lock is a battery operated motor driven lock, which is totally programmable through the keypad for all functions. The unit can be programmed as a momentary unlocking device or unlocked and used as a passage unit. The inside lever of the cylindrical lock is always free for egress. A remote unlocking feature is available to provide unlocking from a remote location if required.

Features

- Non handed
- Non volatile memory
- Programmable at keypad
- Motor driven cylindrical lock
- Meets ANSI A156.2 series, 1000 Grade 1 requirements
- Operates with 4 “C” batteries (included)
- Typical 150,000 operations per set of batteries
- Low battery indication – three chirps after code entry
- 100 user codes – over 1,100,000 possible user combinations
- Tactile keypad made of ultra violet stable material
- UL listed for fire doors
- UL listed to Canadian Safety Standards
- 547 Kit available to cover ILCO prep

Specifications

For Doors	1-3⁄4" thick only
Backset	2-3⁄4" standard. Also available with 3-3⁄4" and 5" backsets
Cylindrical Housing	Steel zinc dichromate finish and stainless steel
Front	Wrought brass, bronze, or stainless steel; 2-1⁄4" x 1-1⁄8", fixed bevel, 1⁄8" in 2"
Roses	Wrought brass and bronze, “L” design
Levers	L, B, J, P design
Latch	Brass. 1⁄2" throw. Listed- 3/4" throw available (41-prefix)
Finishes	3, 4, 9, 10, 10B, 10BL, 20D 26, 26D
Prefixes	10, 11, 21, 22, 23, 25, 28, 30, 36, 37, 41, 60, 63, 64, 65-73, 65-73P, 70, 72, 73, 73-7P, 75*, 76*, 77*, SCSE, VA and VS
Door Prep	ANSI A115.2 (modified)

*Milled plastic backing on inside of lever handle.

Specifications

Inside Escutcheon Material	Die cast zinc
Dimensions, Inside Escutcheon	3-1/2"W x 9-17/32"H x 2-1/8"D
Outside Escutcheon Material	Vacuum die cast brass
Dimensions, Outside Escutcheon	2-15/16"W x 4-1/2"H x 1-3/8"D
Keypad Material	UV stable
Keypad Operating Temperature	4°F (-20°C) to 140°F (60°C)
Keypad Storage Temperature	-22°F (-30°C) to 176°F (80°C)
Batteries	4 “C” Alkaline batteries

How To Order

Prefix	Signature Cylinder	**10**
Series	KP10G77	10-**KP10G77**
Trim	Rose & Lever	10-KP10G77-**LB**
Finish	Specify Finish	10-KP10G77-LB-**26D**

See Keypad Operated Product Catalog for complete ordering information.

KP10G77 Entry Lock With Cylinder

- Latch retracted by lever on inside at all times
- Key outside retracts latch
- Outside lever rigid except when in passage mode or valid user code entered

Inside Escutcheon Cast Zinc

Projection at bottom 9/32" (7mm)
Projection at top 2-1/2" (54mm)

Outside Keypad Forged Brass

Projection at bottom 1-3/8" (35mm)
Projection at top 1/2" (13mm)

Product Systems Manual
Electromechanical Mortise Locks
Monitor Switch Options

SARGENT
1-800-727-5477
www.sargentlock.com

SARGENT 7800/8200 Electromechanical Mortise locks are designed to handle single opening, stand alone applications or can be readily integrated into sophisticated building wide, access control systems. They meet all ANSI/BHMA A156.13 Grade 1 requirements, are UL Listed for use on fire doors and satisfy industry standards for operating temperature, shock and fire hazard.

When powered using filtered and regulated 24 Volts DC or full wave rectified 24 Volts AC, these solenoid operated locks are suitable for intermittent or continuous duty. Repeated operation at voltage exceeding 26.2 Volts R.M.S. will result in damage to the solenoid.

Using the same knob or lever trim and finishes as SARGENT mechanical mortise locks, they provide a uniform look throughout the building.

8200 electromechanical mortise lever locks are available with internal switches for independently monitoring inside/outside lever rotation (RX-) and latch position (LX-).

Lever and Knob Designs

- 8200 Levers: A, B, C, E, F, G, J, L, P, R, S, W, and Y
- 7800 Knobs: B and C

Roses

- 8200 Levers: CR, L, LN and TR
- 7800 Knobs: E, L and O

Escutcheons

- 8200 Levers: CE, LE1, LE2, LE3, LE4, LW1, TE and WT
- 7800 Knobs: KE1, KE2, KE3, KE4, and KW1

Finishes

- 3, 4, 9, 10, 10B, 10BL, 20D, 26, 26D, 32 and 32D

Monitor Switch Options for 8200 Locks

- SPDT type C switches, rated 2 Amp. at 24 VDC
- RX- Request to Exit or Enter
  – Two switches mounted internally in lockbody that provide independent monitoring of inside and outside lever rotation
- LX- Latch Monitor
  – Single switch mounted internally in lockbody that indicates latch retraction
- DX- Deadbolt Monitor
  – Single switch mounted internally in lockbody that indicates deadbolt retraction

Electromechanical Locks

- RX- Request to Exit or Enter
  – Available for the following functions: 70, 71, 72, 73
  – Not available for the following prefixes: 1-, 3P-, 74- or DX-
- LX- Latch Monitor
  – Available for the following functions: 70, 71, 72, 73
  – Not available for the DX- or NY- prefixes

Mechanical Locks

- RX- Request to Exit or Enter
  – Available for the 04 function
  – Not available for the following prefixes: 1-, 3P-, 74- or DX-
  – Not available for the LS or FE trims
- LX- Latch Monitor
  – Available for all non-deadbolt functions: 04, 05, 06, 13, 15, 16, 17, 31, 36, 37, 38, 65, 85, 86, 87, 91 or 92
  – Not available with the DX- or NY- prefixes
- DX- Deadbolt Monitor
  – Not available for the following prefixes: 3P-, 74-, RX- or LX-

How to Order

Specify	Note	Example
Series/Function	Fail Secure	**8271**
Trim	Rose/Lever	8271**LNJ**
Finish	See above	8271 LNJ x **4**

Functions

7870/8270

- Guardbolt deadlocks latch
- Latch retracted by either trim except when outside trim is locked electrically
- Key outside retracts latch when outside trim is locked electrically
- Power off unlocks outside trim
- Fail safe

7871/8271

- Guardbolt deadlocks latch
- Latch retracted by inside trim or key outside
- Outside trim rigid at all times unless unlocked electrically
- Power off locks outside trim
- Fail secure

7872/8272

- Guardbolt deadlocks latch
- Latch retracted by either trim except when both trims are locked electrically
- Key from either side retracts latch when trim is locked electrically
- Power off unlocks inside and outside trim
- Fail safe – both trims

7873/8273

- Guardbolt deadlocks latch
- Latch retracted by key from either side
- Inside and outside trim rigid at all times unless unlocked electrically
- Power off locks inside and outside trim
- Fail secure – both trims

Product Systems Manual KP8200 Keypad Operated Mortise Lock

SARGENT
1-800-727-5477
www.sargentlock.com

The Keypad Mortise Lock is designed for areas which require authorized entry. It is a self contained microprocessor controlled lock with non volatile memory. The non volatile memory insures codes will not be lost even if the batteries stop functioning. The mortise lock is a battery operated motor driven lock, which is totally programmable through the keypad for all functions. The unit can be programmed as a momentary unlocking device or unlocked and used as a passage unit. The inside lever of the mortise lock is always free for egress. A remote unlocking feature is available to provide unlocking from a remote location if required.

Features

- Non volatile memory
- Easily programmable at keypad
- Motor driven mortise lock
- 3/4" stainless steel, anti-friction reversible latch
- Stainless steel non-handled guardbolt
- Lever trim through-bolted for increased security and durability
- Handed, easily field reversible without disassembling lock body
- Meets ANSI A156.13, 1000 Grade 2 requirements standard
- Meets ANSI A156.13, 1000 Grade 1 requirements (18 prefix)
- Operates with 4 “C” batteries (included)
- Typical 150,000 operations per set of batteries
- Deadbolt available for KP8276/KP8277
- No deadbolt available for KP8278/KP8279
- Low battery indication–three beeps after entry of access code
- Cylinder override available for KP8276/KP8278 models (Size 41-std, size 42 removable core)
- 100 user codes – over 1,100,000 possible user combinations
- One master code – assigns emergency, supervisory and user codes
- One emergency code – allows entry when deadbolt is thrown (KP8276/KP8277)
- One supervisory code – allows temporary lockout of selected users, changes unlock time duration, requests infrared interrogation output, and may add user codes
- “One time” user codes
- Operates utilizing any one to six digits per code – digits may be repeated or start with “0”
- Entry of three wrong user codes in succession disables all codes for ten seconds
- Piezo horn sounds with each keystroke or disabled through master or supervisory codes
- Last fifteen entries can be output to portable printer via infrared link from keypad
- Three LEDs on keypad – green indicates unlocked – yellow indicates programming mode – flashing green and yellow indicates deadbolt thrown or mortise lock is in passage mode
- Keypad made of ultra violet stable material with tactile feel
- Unlock time adjustable
- Built-in remote “Request to Enter” feature (requires 52-2071 harness)
- UL listed for fire doors
- UL listed to Canadian Safety Standards

Additional Accessories

Infrared Portable Printer 52-2069

- Used to download the user number and transaction type from keypad to printer
- Operates with 4 “AA” batteries (included)

Auxiliary Power Unit 52-2065

- Used to power unit if batteries are too weak or cylinder is not used
- Operates with 4 “C” batteries (included)

Remote Unlocking 52-2071

- Wire harness cable
- Used for remote unlocking of keypad mortise lock
- Requires raceway through door
- Requires a momentary contact switch

Printer Paper 52-0034

- Use with infrared portable printer
- Six rolls per package

Cover Plate 52-0159

- Used to cover holes on existing door for KP8276 or KP8278
- Specify hardware finish
- Plate Dimensions: 12-1/2"L x 3-1/2"W

How to Order

Specify	Note	Example
Prefix	Signature Cyl	**10**
Series	KP8276	10-**KP8276**
Trim	Rose/Lever	10-KP8276- **LNL**
Hand	Specify	10-KP8276-LNL- **RH**
Finish	Specify	10-KP8276-LNL- RH-**26D**

See Keypad Operated Product Catalog for complete ordering information.

Product Systems Manual KP8800/KP8900 Keypad Operated Rim or Mortise Exit Device

SARGENT
1-800-727-5477
www.sargentlock.com

The SARGENT keypad operated rim/mortise exit device is designed for areas that require authorized entry, such as stairwell doors, meeting rooms, company health clubs, etc. It is a self contained microprocessor controlled lock with non volatile memory. This memory insures that the codes will not be lost, even if the batteries stop functioning. The keypad will hold a total of 100 different user codes. All programming is done through the keypad, with over 1,100,000 possible combinations. The ET outside trim is a motor driven battery controlled unit. Key override provided in the KP8877 and KP8977 models.

KP8977 ETL Shown

Features of the KP8877 and KP8977

- Non-volatile memory
- Motor-driven, battery-operated ET trim
- Units battery operated with four "C" alkaline batteries (included)
- Typical 40,000 operations per set of batteries
- Low battery indication-three chirps after code entry
- Unit can be put in "passage only" mode at the keypad
- Option code available to sound horn every time keypad is pressed
- External remote "request to enter" connector (52-2071)
- External battery input connector included to power unit in case of battery failure
- 100 user codes: one Master Code, one Supervisory Code, with the rest being standard codes, passage codes, or one-time only codes
- Operates utilizing any one to six digits per code-digits may be repeated or start with "0"
- Master assigns Emergency, Supervisory and user codes
- All programming done at keypad
- Operates using any code from two to six digits
- Cylinder override provided (34 rim cylinder – 8877; 46 mortise cylinder 8977)
- Entry of three wrong user codes disables all codes for ten seconds, visible error code
- Infrared link to optional printer (52-2069) shows last fifteen transactions
- Push bar retracts latch from inside at all times
- Latch – 3/4" throw (stainless steel-KP8800; anti-friction brass-KP8900)
- Chassis – non ferrous alloy

Keypad

- Made of ultraviolet stable textured material
- Operating temperature: -20° to 130°F
- LEDs indicate valid/invalid entries
- Green LED indicates unlocked; Yellow indicates unit is in programming mode
- Flashing green and yellow LEDs indicate exit device is in passage mode
- Infrared LED for transaction output of last 15 transactions

KP8877 Rim Exit Device With Cylinder

- Latch retracted by inside push rail at all times
- Outside cylinder override retracts latch
- Outside lever rigid except when in passage mode or valid user code entered

KP8977 Mortise Exit Device With Cylinder

- Latch retracted by inside push rail at all times
- Outside cylinder override retracts latch
- Outside lever rigid except when in passage mode or valid user code entered

KP8878 Rim Exit Device Without Cylinder

- Latch retracted by inside push rail at all times
- Outside lever rigid except when in passage mode or valid user code entered
- No cylinder override

KP8978 Mortise Exit Device Without Cylinder

- Latch retracted by inside push rail at all times
- Outside lever rigid except when in passage mode or valid user code entered
- No cylinder override

See Keypad Operated Catalog for complete ordering information.

Product Systems Manual
Profile Series v.G1
Stand-Alone Access Control Products

SARGENT
1-800-727-5477
www.sargentlock.com

The Profile Series v.G1 of stand-alone access control products provide the user with a broad selection of access control levels, features and mechanical locking devices that are housed in a sleek, architecturally pleasing design. Each level of access control features are supported by the physical security of a SARGENT ANSI Grade 1 mechanical locking device: mortise, bored or exit. These locking devices allow for electronic control over the optimum mechanical lock and are UL Listed for use on fire doors. Trims and finishes are identical among the different access levels, allowing the levels to be combined in a cost effective continuity of design.

The SofLink Plus™ w/ SofLink PDP™ application software allows you to meet your facility's needs while maintaining a stand-alone, single door electronic access control system.

The latest security enhancement and convenience features offered with the Profile Series v.G1 have been expanded to include: 2,000 users/audits, blocked holidays, 10,000 user-name database with import function, and remote wireless RF Technology. The lock can be programmed for multiple modes of operation including: Passage, Unlock/Relock and the new Panic function. RF Technology allows the user to remotely control the lock.

The Profile Series v.G1 supports multiple levels of technology, which operates in similar fashion with the following distinctions:

LK: Keypad only operation with 100 users and can output the last fifteen user transactions to an infrared printer. All programming is done at the keypad. Provides basic stand alone access control for areas that require authorized entry such as stairwell doors, storage rooms and offices.

G1-LU: Keypad only operation with 2,000 users and 2,000 user transactions. Programming is done at the lock via SofLink Plus w/ SofLink PDP software and a PDA. Advanced features such as time zone functions, auto unlock and blocked holidays require SofLink Plus software.

G1-PK: Keypad and proximity credential operation at lock with programming similar to G1-LU. Increased security and flexibility is provided as these products may be programmed to require both code entry and proximity card/tag/fob presentation for operation. Can also be operated by keypad or proximity presentation.

G1-PA: Proximity credential operation with all programming done via SofLink Plus w/ SofLink PDP software. Increased security and convenience is offered as all programming is done via the SofLink Plus application software. Well suited for high traffic or clean room applications where keypad usage is not desired such as universities, laboratories or hospitals.

G1-TU: Keypad only operation with RF Technology, programming similar to G1-LU. All the features of the G1-LU level plus remote wireless actuation via a hand held RF FOB. Ideal for operating the lock in Passage, Unlock/Lock and Panic modes from across the room or down the hall.

G1-TA: Proximity only with RF Technology, programming similar to G1-PA. Adds the feature of remote wireless operation.

G1-TP: Keypad and proximity credentials with RF Technology, programming similar to G1-PK. Adds the feature of remote wireless operation.

HID
HID CORPORATION

Features

- 2,000 individual users
- 2,000 event transaction history (audit trail) – provides parameters such as unlock, egress activation, entry into programming mode, date, time, user number and door number (G1-LU, G1-PK, G1-PA, G1-TU, G1-TP and G1-TA)
- PDA (wireless) communication to and from lock
- Moisture resistant coating on electronics
- For use on exterior (non-fire rated) doors with weather-seal gasket, boot; shroud (optional)
- Non-volatile memory
- Lock supports all HID bit formats when programmed directly through the keypad (Presentation Method)
- Easily programmable at keypad for basic features on LK, G1-LU, G1-PK, G1-TU and G1-TP
- SofLink Plus™ w/ SofLink PDP™ Access Control Management software allows simple programming and interrogation using PDA data transfer
- SofLink Plus™ w/ SofLink PDP™ Software required for programming proximity only (G1-PA, G1-TA) and where time zone functions are required for the G1-LU, G1-PK, G1-TU and G1-TP
- PDA Infrared Communication performed on outside of door
- Typical operating range of RF Technology (G1-TU, G1-TP, G1-TA) up to 75 feet inside door, 25 feet outside
- Software directly supports 26, 33 and 34 bit HID formats (For 35 bit Corporate 1000 format consult factory)
- Unlock time adjustable (1-99 seconds)
- LEDs on unit indicate status – green indicates unlocked; yellow indicates programming mode
- Audible beep sounds with each keystroke or can be disabled through programming
- UL Listed for fire doors (12- for exit devices)
- UL Listed to Canadian safety standards
- Remote power and request to enter available – requires wire harness (52-2500) and hard wiring
- Operates with 6 "AA" batteries (included)
- Low battery indication – four chirps after code entry. Master, Emergency or Supervisory code will operate lock after the low battery indication period has passed and user codes no longer operate the lock
- Last fifteen entries can be output to portable printer (52-2069) via infrared ink from keypad (LK only)
- User Codes – over 1,100,000 possible user combinations
  - 100 different user codes (LK only)
  - 2000 different user codes (G1-LU, G1-PK, G1-PA, G1-TU, G1-TP, G1-TA)
  - Operates utilizing any one to six digits per code – digits may be repeated or start with "0"
  - One master code – assigns emergency, supervisory and user codes and allows entry when deadbolt is thrown (mortise locks)
  - One supervisory code – allows temporary lockout of selected users, changes unlock time duration, requests infrared interrogation output, and adds user codes
  - One emergency code – allows entry when deadbolt is thrown (mortise locks). Unlocks after the low battery indication period has passed and user codes no longer operate lock
  - Entry of three wrong user codes in succession disables all codes for ten seconds
  - Maintained (passage) code – unlock for extended periods of time

Product Systems Manual
Profile Series v.G1
Stand-Alone Access Control Products
Bored and Mortise Locks

SARGENT
1-800-727-5477
www.sargentlock.com

Bored Locks

The motorized Bored (10 Line) Profile Series v.G1 design provides uniformity when used with other SARGENT bored locks at a facility. This product is available with six different lever designs, ten hardware finishes and cylinder override standard.

Mechanical Features

- Meets ANSI/BHMA A156.2 Grade 1 requirements
- Motor driven cylindrical lock
- Latch brass, 1/2" (13mm) throw; UL Listed 3/4" (19mm) throw (41- prefix) available
- 2-3/4" (70mm) backset standard, consult factory for other backsets available
- For 1-3/4" (44mm) thick door standard, consult factory for other thicknesses
- Non handed
- Multiple lever and finish designs available. Reference catalog for details
- Heavy duty lever spring return
- Steel mounting studs
- 3 through-bolt position combinations
- Typical 80,000 operations per set of batteries
- Key override standard
- Not available with 10-UL-, 82-, 83-, 84- or VS- prefixes

10G77 Entry Lock with Cylinder

- Latch retracted by inside lever at all times
- Key outside retracts latch
- Outside lever rigid except when in “passage” mode or valid user code entered

Mortise Locks

The one-piece escutcheon of the motorized mortise lock has a clean, crisp design and is available in thirteen lever designs and ten hardware finishes.

Mechanical Features

- Meets ANSI/BHMA A156.13 Grade 1 requirements
- Motor driven mortise lock
- 3/4" stainless steel, anti-friction reversible latch
- For 1-3/4" (44mm) thick door standard, consult factory for other thicknesses
- 1" stainless steel deadbolt with hardened steel rollers
- Stainless steel non-handed deadlocking latch
- Handed, easily field reversible without disassembling lock body
- Lever trim through-bolted for increased security and durability
- Multiple lever and finish designs available. Reference catalog for details
- Typical 75,000 operations per set of batteries
- Cylinder override for 8276 and 8278 models, Size 43-standard and removable core. (1-3/8" [35mm] length of shell)
- Not available with SC- or SE- prefixes

Entry Locks

- Deadlocking latch
- Latch and deadbolt retracted by inside lever at all times
- Outside lever rigid except when in “passage” mode or valid user code entered

8276 with Cylinder (Shown)

- Key outside retracts deadbolt and latch
- When deadbolt thrown, outside lever operable only with Emergency or Master code

8277 without Cylinder

- When deadbolt thrown, outside lever operable only with Emergency or Master Code

8278 with Cylinder Less Deadbolt (Shown)

- Key outside retracts latch
- No deadbolt function

8279 without Cylinder Less Deadbolt

- No deadbolt function

Product Systems Manual
Profile Series v.G1
Stand-Alone Access Control Products
Rim and Mortise Exit Devices

SARGENT
1-800-727-5477
www.sargentlock.com

SARGENT's rim and mortise exit Profile Series v.G1 products provide stand-alone access control in areas where life safety is a concern. Includes stairwell areas or tenant occupied facilities. The Profile Series v.G1 exit devices are available with thirteen different lever design styles and ten hardware finishes.

Mechanical Features

- Meets ANSI/BHMA A156.3 Grade 1 requirements
- Motor-driven ET trim
- Latch 3/4" (19mm) throw (stainless steel 8800, anti-friction brass 8900)
- Multiple lever and finish designs available. Reference catalog for details
- For 1-3/4" (44mm) door standard, consult factory for other thicknesses
- Typical 90,000 operations per set of batteries
- Cylinder override use 34 rim cylinder, 8877; 46 mortise cylinder (1-3/4" [44mm] length of shell), 8977
- No cylinder override for 8878 and 8978
- 8977 not available with 70-, 72-, 73-, 73-, 7P-, SC- or SE- prefixes

Exit Locks

- Latch retracted by inside push rail at all times
- Outside lever rigid except when in passage mode or valid user code entered
- Outside cylinder override retracts latch

8877 Rim with Cylinder (Shown)

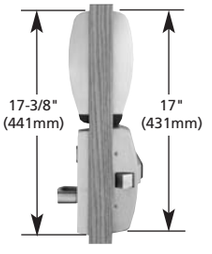

8977 Mortise with Cylinder (Shown)

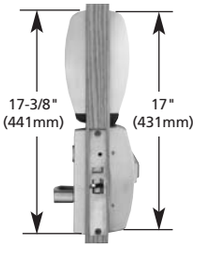

8878 Rim Exit without Cylinder

- Latch retracted by inside rail at all times

8978 Mortise Exit without Cylinder

- Latch retracted by inside rail at all times

Credentials

- Provides higher level of security when combined with keypad operation
- Coin sized transponder provides ability to add HID proximity technology

MicroProx™ Tag

- HID-based proximity cards, fobs or tags

SARGENT ProxKey II™

RF FOB (52-2551 RF)

- Transmitter used with RF Technology (G1-TU, G1-TA, G1-TP)
- Allows integration into existing facilities with HID based technology, including 26, 33, 34, and 35 bit formats

HID ProxCard II™

SofLink Plus™ w/ SofLink PDP™ Access Control Management System

The SofLink Plus w/ SofLink PDP Access Control Management software allows simple programming and interrogation of the Profile Series v.G1 stand-alone access control products. This software provides the means for fast, convenient assignment of users, access levels and for management of multiple doors, audit trails, and time zones. Transferring information to and from locks is performed via PDA.

SofLink Plus w/ SofLink PDP Features

- Access level oriented format
- Multiple user types
- 10,000 user name database
- User name import function from database
- Auto unlock with or without "first-in" authorization
- Holidays (16 single days; 16 blocked)
- Directly supports 26, 33, and 34 HID bit formats
  - For 35 Bit HID Corporate 1000 Format consult factory

Product Systems Manual
Monitoring Accessories

SARGENT
1-800-727-5477
www.sargentlock.com

Remote Monitoring Consoles

- Designed to control and monitor 4 or 8 zones through toggle switches
- Consoles include wall mount junction box clearly marked to provide connecting points via screw terminals
- Supplied with 10 foot interconnect cable with Sub D connectors
- 24VDC power requirement (3510/3560) For eight zones, 3560 required
- Monitor Lights
  – Red – Violation
  – Green – Secure
  – Red – Unlocked
  – Green – Locked
- Relay Output: Form "C" 5 amp @ 24VDC
- Current Draw: 320mA – 4414 console
  635mA – 4418 console
- Audible signal indicates violation
- Dimensions–Console
  4414 – 8"L x 6"D x 4"H
  4418 – 12"L x 6"D x 4"H
- Dimensions–Junction Box
  12"L x 12"W x 4"D
- Toggle (maintained) at each zone to control load

Monitoring Strike

881

- May be used in place of surface mounted strike for 5800, 12-5800, 8500, 8700, 8800, 12-8800 exit devices
- SPDT switch to signal remote location
- Monitors latch status
- Used with 4414 or 4418 console
- UL Listed
- For single door application alarms

  Material: Ductile Iron
  Finish: Black nylon coated
  Switch Rating:
  2 amps @ 24VDC

4414 4 Zone Console

4418 8 Zone Console

4414 Shown

Master Control Panel Features

- Key Switch – The 41 cylinder on the console allows the console to be "locked down" during unsupervised times. When it is locked, all zones go into a secure state. Changing toggle switch positions will not change the Green lock status indicator light.
- Alarm Reset Switch – Used to silence console horn. Reset switch resets horn and latch violation signal on console indicated by red LED.
- Horn – Provides an audible signal to the operator of an open door or a violation alarm condition. LED on console indicates which zone is in violation. Alarm Reset Switch is used to silence horn.
- Horn Silence Switch – Turns horn on and off

Electrical Lockable Mullion

- EL980 Key-removable mullion
- Designed for paired openings with any 8800 rim exit device
- Mortise cylinder provided (size 46)
- Contains multi-conductor cable and quick disconnects for use with 881 monitor strike
- Cable with eyelet attached to mullion and top retainer allows mullion to be disengaged from retainer providing access to wiring and connectors

Door Status Switches

3287

- Monitors door position remotely
- Can be used with 4414 or 4418 consoles or Electroguard®
- SPDT concealed switch (3 wire)–brown
- 1/4 amp @ 24VDC
- Requires 1" diameter hole

3285

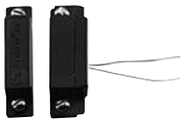

- Available for 5100, 5800, and 12-5800 exit alarms
- Surface applied
- Two wire – N.O. Contact

Horn

4380H

- Used to signal a remote location
- dB rating: 85dB
- Horn input voltage: 6-28VDC @ 3-14 mA
- Available with LEDs (4380HL)

Product Systems Manual
Key Switches and Card Reader

SARGENT
1-800-727-5477
www.sargentlock.com

The 4370 Series cylinder key switch line adds versatility to electrified exit devices, electromechanical locks, electric strikes, and alarm bypass, by allowing remote or local operation of each opening to be customized to the actual usage of the building. All key switch contacts are rated at 4 amp @ 24VDC. They are supplied standard with a size 41 mortise cylinder (w/103 cam) for conventional keying. To order cam only, specify 13-0921. For KESO keying, the standard cylinder and cam required is 47-71-103. All key switches are available in 32D only. Consult factory for other finishes.

Face Plate Dimensions – Single Gang: 4-1/2" x 2-3/4"
Face Plate Dimensions – Double Gang: 4-1/2" x 4-1/2"

Outlet box size for single gang: 4" x 2-1/8" x 1-7/8" (Appleton 4CS, RACO 670)
Outlet box size for double gang: 4" x 4" x 2-1/8" (Appleton 132, RACO 680)

4370-4379

4370L-4379L

4370LT-4379LT

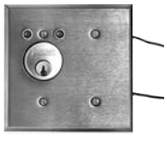

4370LH-4379LH

Item	Description
4370	One SPDT maintained contact switch
4371	One SPDT momentary contact switch
4372	One DPDT maintained contact switch
4373	One DPDT momentary contact switch
4374	Two SPDT maintained contact switch
4375	Two SPDT momentary contact switch
4376	Two DPDT maintained contact switch
4377	Two DPDT momentary contact switch
4378	One SPDT momentary & one SPDT maintained contact switch
4379	One DPDT momentary & one DPDT maintained contact switch

Suffixes:	
L	LEDs – one red and one green indicator light
H	Horn
T	Time Delay (5-120 seconds)

Key switches with a time delay (T) or a horn (H) are provided as a double gang unit.

4301 Card Reader

The 4301 card reader is a self-contained access control system offering a cost effective solution for commercial and industrial installations.

Features

- 120 users with codes 1-6 digits in length
- All programming accomplished by entering instructions through keypad and swiping cards at the reader
- Reads ABA standard track II encoded magnetic swipe cards
- Non-volatile EEPROM memory
- Operates with 12-24VDC or VAC (selectable)
- Keypress audible feedback
- LEDs indicate status: locked, unlocked, and programming mode
- Additional features include: forced door relay, propped door relay, alarm zone shunt relay, and door position sensor input (requires door status switch)

Finish: 26D only

Specifications

Card Reader

- Dimensions: 1.75"w x 4.50"h x 1.55"d
- Weatherproof gasket provided for outdoor applications
- Temperature: -20°F to 130°F (-28°C to 54°C)
- Current: 25mA typical @ 24VDC without additional relays; each additional energized relay requires 15mA

Keypad

- Dimensions: 2.75"w x 4.50"h x 2.40"d

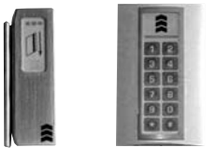

52-0171 Magnetic Stripe Card Pack

- 25 cards per package
- For use with 4301 card reader

Product Systems Manual
Keypads, Push Buttons and Switch Locks

SARGENT
1-800-727-5477
www.sargentlock.com

Keypads

The 4290 Series microprocessor controlled keypads provide keyless access, for electric locking devices requiring a dry contact switch. User codes are programmed to perform various functions from keypad. There are three LEDs on the keypads: yellow, monitors keypad status; red and green, monitors latch and/or door status. Keypads are available in 32D finish only.

4291

- Designed for indoor use
- Single door application
- 15 user codes. (1-6 digits)
- One master code (1-6 digits)
- Momentary control adjustable (1-90 seconds)
- Maintained control infinite
- 24VDC regulated input voltage (3510/3530)
- Control output: 1 SPDT 5 amp, 28VDC
- Current draw: .045 amp
- Face plate dimensions: 4-1/2" x 2-3/4"
- Uses standard outlet box, Slater S1-18W

4292

- Designed for outdoor use (20˚F-130˚F)
- Weather resistant. Not to be used in direct sunlight or rain
- Single door application
- 15 user codes (1-6 digits)
- One master code (1-6 digits)
- Momentary control adjustable (1-90 seconds)
- Maintained control - infinite
- 24VDC regulated input voltage(3510)
- Control output: 1 SPDT 5 amp, 28VDC
- Current draw: .045 amp
- Face plate dimensions: 4-1/2" x 2-3/4"
- Requires 4352 junction box or equivalent

Push Button

Provides momentary unlocking of electrical products requiring constant switching

4241

- Designed to mount under desk
- Red LED indicates status of lock
- Snap action push button
- Control Output: SPDT, 6 amp @ 24VDC
- 1-1/16" x 3-1/8" x 2" D
- Finish: 28

Junction Box

4352

- Designed for use with 4292 keypad
- 2-7/8"W x 4-5/8"H x 2"D
- Aluminum

Switch Locks

Provides authorized personnel with the ability to activate or de-activate an electrical product which requires a maintained switch. The switch is activated by turning the key 90˚ right or left (until stop is reached), then returning the key to the vertical position and removing. The key is removable in the vertical position only.

4153

- KESO Security System Cylinder
- Adjustable from 1-3/4" - 2-3/4"
- Operates UL Listed switch
- SPDT maintained
- Finish: 26
- Switch rating: 250VAC, 5 amp.; 30VDC, 3 amp

4253

- KESO Security System Cylinder
- Operates UL Listed switch
- SPDT maintained
- Listed in UL Burglary Protection Equipment List under Connector and Switches (25L30)
- Drill and pick resistant
- Finish: 26
- Switch rating: 250VAC, 5 amp; 30VDC, 3 amp

How to Order

Examples: 4153 x 26
4241 x 28

Product Systems Manual
Wall Switches

SARGENT
1-800-727-5477
www.sargentlock.com

Wall switches are used to interface with door operators or other electromechanical hardware. Careful consideration should be given to the location of switches relative to their proximity to the door and the door's direction of swing. All wall switch contacts are rated at 4 amp @ 24VDC except where noted.

4296

- Blank wall switch
- Concealed socket mounting screws
- Normally open momentary contact (SPDT)
- Face plate dimension: 4-5/8" W x 4-1/2" H
- Double gang electrical box required

4298

- Wall switch engraved with "Push to Open"
- SPDT momentary contact
- Face plate dimension: 3" W x 4-1/2" H

4296H

- Wall switch engraved with handicap logo
- Concealed socket mounting screws
- Normally open momentary contact (SPDT)
- Face plate dimension: 4-5/8" W x 4-1/2" H
- Double gang electrical box required

4299

- Wall switch with illuminated "Exit" button
- SPDT momentary switch rated at 6 amp @ 24VDC

4296HP

- Wall switch engraved with handicap logo and "Press to Operate Door"
- Concealed socket mounting screws
- Normally open momentary contact (SPDT)
- Face plate dimension: 4-5/8" W x 4-1/2" H
- Double gang electrical box required

4297HP

- Frame switch engraved with handicap logo and "Press to Operate Door"
- Concealed socket mounting screws
- Normally open momentary contact (SPDT)
- Face plate dimension: 1-3/4" W x 6-11/32" H

Product Systems Manual
MPower 4000 Series
Low Energy Door Operator

SARGENT
1-800-727-5477
www.sargentlock.com

The SARGENT MPower 4000 Series Door Operators provide barrier free access for the physically challenged where mechanical door closers cannot provide ADA Compliance due to heavy door or draft conditions. Safety carpets or guide rails are not required due to compliance as low energy power operated doors as defined in ANSI A156.19.

Features

- Ease of installation and setup
  - Simple instructions
  - Uses push-button settings for door open and door close positions
- Application versatility and ease of adjustment
  - Field-reversible (handed unit available)
  - Push side or pull side mounting units available
  - Power Operator function can be configured during installation
  - Interfaces with electric hardware and integrates with access control systems
  - Available in EN, EB and EAB finishes
- Operates as mechanical surface closer during close cycles or if power is turned off
  - Critical for fire rated doors
  - Spring force provides the feel of a normal manual door closer
  - Door can be opened manually if desired
  - Adjustable opening and closing speeds and forces
- Operation startup options
  - Wall switches
  - Radio frequency device
  - Push and Go
- Hold Open options
  - 0-30 seconds (5 seconds minimum required for ADA and ANSI A156.19)
  - Choice of indefinite hold open features
- Obstruction Detection
  - Door closes if it hits an obstruction while opening
  - Door re-opens once if it hits an obstruction while closing
- Electrical Data
  - Power Input: 120 VAC, 60 Hz
  - Current Draw 2 amp
  - Auxiliary Output 24 VDC (unregulated) @ 500 mA
  - SPDT relay output for controlling electric strikes or electric locks not to exceed 5 amp @ 24 VDC
  - External 24 VDC regulated and filtered power supply needed for 56- latch retraction applications

Certifications

The Americans with Disabilities Act (ADA) is a law administered by the U.S. Department of Justice. Its guidelines under ADA Regulation for Title III are detailed on the ADA website: www.ada.gov.

The SARGENT MPower fully complies with ADA and ANSI A156.19 requirements. It functions using an A/C motor and hydraulic pump to activate a heavy-duty hydraulic door closer controlled by an Electronic Limit Switch (ELS) circuit board that limits the degree of door swing. The MPower is your best choice in a low energy power door operator.

- UL and cUL for use on fire and smoke barrier doors
- Meets requirements for UL10C and UBC 7.2 for positive pressure
- 2-year warranty (as per current price list, terms and conditions at time of purchase)
- Americans with Disabilities Act (ADA)
- BHMA 156.19 for Low Energy and Power Assist operated doors

Applications

4060/4067 Pull Side

4060 RIGID ARM AND SLIDE TRACK
- 85° to 110° templated door openings in 5° increments
- 1/8" (3mm) maximum frame reveal

4067 DOUBLE EGRESS ARM AND SLIDE TRACK
- From 1/8" to 3" (3 to 76mm) frame reveal
- Specify hand when ordering

An auxiliary stop is suggested where severe conditions exist.

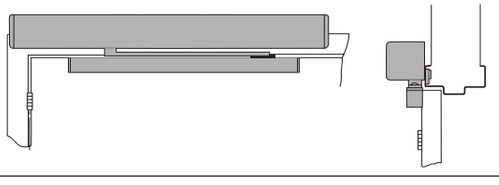

4051/4052 Push Side

STANDARD DUTY DOUBLE LEVER ARM
- Frame reveals 2-3/4" to 7" (70 to 178mm)
- An auxiliary door stop is required for these applications.
- Door opening
  - 4051 up to 110°
  - 4052 from 110° to 180°

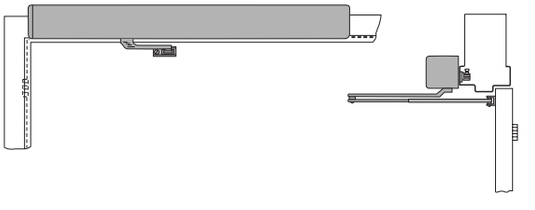

For complete ordering information consult the MPower 4000 catalog.

Product Systems Manual
Overhead Concealed Door Closer with Security Package 268 CSPS/268 CSPD

SARGENT
1-800-727-5477
www.sargentlock.com

The 268 CSPS is an overhead concealed security door closer with concealed arm. It is provided with a single pole double throw (SPDT) switch. The 268 CSPD is provided with a double pole double throw (DPDT) switch. Both of these concealed door closers are designed to interface with monitoring and/or alarm systems. It provides an indication at a remote location that the door has been opened. This concealed closer is used in areas where vandalism or security are an issue.

Concealed Track Application - 268 Series

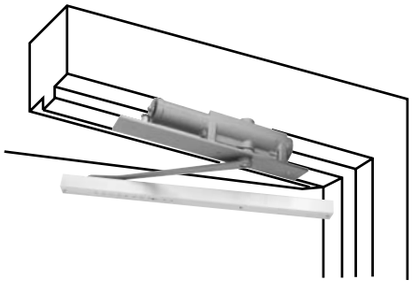

CSPS/CSPD Package Includes

- 268 door closer body, heavy duty mounting plate, cover plate and field adjustable door position switch
- All exposed screws are tamperproof security screws with TORX® provided standard
- Security track and arm

Features

- Fully concealed body and track arm
- Arm available standard or hold open. Both available with bumper option to assist backcheck
- Switch equipped with three (3) wire color coded 12" harness with connectors for ease of installation
- Heavy duty steel (14 gage) top plate protects closer adjustments from unauthorized use
- Security track with ramp end caps
- Security arm with threaded in roller prevents unauthorized tampering
- Switch provides normally open or normally closed circuit
- Switch contacts are rated @ 125/250VAC @ 10.1 amps maximum resistive load
- Limited two year warranty on electrical components
- All-weather fluid standard

Notes

- Removable frame stop is required
- Template for 4" frame is provided standard
- Special templating required, consult factory

How to Order

Example: 268 x CSPS x RH

Product Systems Manual
351 EHT/EHTD
Electromechanical Closer-Holder Release Devices

SARGENT
1-800-727-5477
www.sargentlock.com

Designed to hold open fire or smoke doors until released by the fire detection system, the 351 EHT provides a convenient means of meeting fire and building code requirements without interfering with normal building operation. The 351 EHT Closer-Holder combination allows the door to be normally held open but is self-closing when power is interrupted during an emergency or by switch control. Common applications are cross corridor and stairwell doors. With its rugged track design, the 351 EHT is suitable for multiple manual operations. It is also applicable for non-rated doors such as offices or conference rooms, where the convenience of an electrically controlled closer-holder device may be desirable.

Features

- Exceeds ANSI/BHMA A156.15 requirements for manual/forced release from hold open
- Ideal for facilities with existing fire detection systems
- Conforms to standards UL 10C and UBC 7-2 (1997) Positive Pressure Fire Tests of door assemblies
- UL Listed and cUL Listed to Canadian Safety Standards for use on fire doors
- Available in EB, ED, EN, EP and EAB finishes
- Holder
  - Fail Safe operation
  - Single point hold open adjustable from 85° to 110°
  - Adjustable holding force for easy pull or push out of hold open
  - Push, pull or double egress installations
  - Non-handed, one piece aluminum track fits on 1-5/8" (41mm) frame (pull side application)
  - For interior doors up to 48" (1219mm) wide
  - Auxiliary door stop is required at hold open point
  - Dual voltage: 24 VDC or VAC @ .1 Amp.
  - PC board with on/off switch, self-resetting fuse and terminal strip for wire connections
  - 2 year limited warranty on electromechanical track assembly
- Closer
  - SARGENT 351 ANSI/BHMA A156.4 Grade 1 closer
  - Body is cast, one piece high strength aluminum/silicon alloy
  - Adjustable spring power, door speed, latch speed and backcheck valves
  - Optional delayed action valve
  - High impact plastic cover standard, metal cover optional
  - Cover projection 2-3/16" (56mm) max.
  - 10 year limited warranty on closer body
- Options
  - 36- Prefix — Security TORX screws supplied for cover, track and spindle
  - MC Suffix — Metal cover for closer body, non-handed
  - TB Suffix — Through-bolts for closer body mounting

How To Order

Models

- 351 EHT – Push or Pull, non-handed
- 351 EHTD – Double Egress, handed
- 351D EHT – Push or Pull with Delayed Action, non-handed
- 351D EHTD – Double Egress with Delayed Action, handed

For all models, add finish and options as needed.

Example:

351D EHTD x LH - TB x EN

Left hand, double egress 351 EHT with delayed action and through-bolts in EN finish

Applications

Pull Side

- Track mounted to face of frame
- 351 closer is mounted on hinge side of door
- Use on corridor or when pull side, single-point hold open is required
- Non-handed

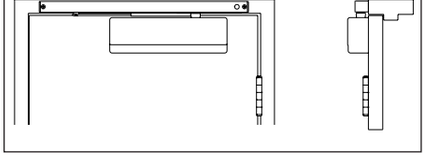

Push Side

- Track mounted to underside of the frame stop
- 351 closer is mounted to stop side of door
- Use on corridor or stairwell doors where push side, single-point hold open is required
- Non-handed

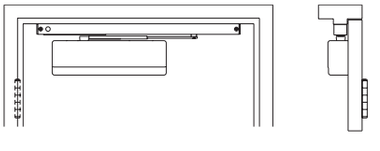

Pull Side - Double Egress

- Track mounted to face of frame
- 351 closer is mounted to hinge side of door
- Use on double egress openings when pull side hold open is required
- Double egress arm for reveal of 1/8" to 3" (3mm to 76mm) maximum
- Unit is handed

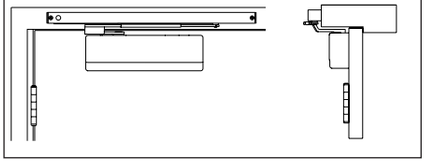

Product Systems Manual
2408 Series Fire Guard®
Single Point Closer-Holder

SARGENT
1-800-727-5477
www.sargentlock.com

Fire and building codes require that a door be self-closing to stop the spread of fire and smoke. Many times this code requirement will interfere with the normal operation of the building. The Fire Guard® Series closer-holder combination allows the door to be held open during the normal operation of the building, but provides for automatic closing during an emergency. Commonly used on cross corridor or stairwell fire doors, they also add convenience when used on nonrated openings such as conference rooms or offices, allowing for release from an inside location.

Features

- Conforms to standards UL 10C and UBC 7-2 (1997), Positive Pressure Fire Tests of door assemblies
- UL Listed and cUL Listed to Canadian Safety Standards for use on fire doors
- Easily retrofits existing 2407 Series Fire Guards
- Available in EB, ED, EN, EP and EAB finishes
- Holder
  - Fail Safe operation
  - Single point hold open from 85° to 110°
  - Adjustable holding force for easy pull or push out of hold open
  - Push, pull or double egress installations
  - Use of auxiliary door stop required
  - Aluminum track will accommodate concealed or surface wiring standard
  - Self resetting fuse on circuit board
  - Remote release option
  - Terminal strip for ease of wiring
  - Maintained On/Off switch
  - Photoelectric smoke detector with LED indicator option
  - Operating voltages: 24VAC/VDC, or 120VAC @ .1 Amp.
  - 2 year limited warranty on electromechanical components
- Closer
  - SARGENT 351 ANSI/ BHMA A156.4 Grade 1 Closer
  - Rack and pinion operation
  - Body is cast, one piece high strength aluminum/silicon alloy
  - Full size 1/8" (3mm) brass adjusting valves
  - Adjustable spring power
  - Adjustable closing and latching speeds
  - Adjustable backcheck
  - Cover projection 2-3/16" (56mm) max.
  - 10 year limited warranty on closer body
- Prefixes
  - 12- Prefix – Integrated photoelectric smoke detector
  - 9- Prefix – Companion unit for use with 12- on double doors, 24 VDC only
  - No Prefix – Stand alone unit for use with fire alarm system
- Models
  - 2468 – Pull Side, non-handed
  - 2478 – Pull Side Double Egress, handed
  - 2498 – Push Side, non-handed

UL Listing

- All smoke detector units (12-) have been tested and evaluated for public safety by Underwriter's Laboratories and are listed for application on labeled fire doors
- All companion units (9-) and stand alone units are UL Listed for application with all compatible UL Listed fire and smoke detection equipment

Applications

2468, 9-2468, 12-2468 Pull Side

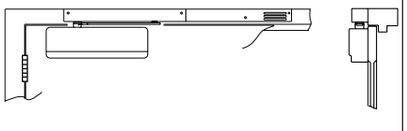

- Track is mounted to face of frame
- The 351 closer is mounted on hinge side of door
- Use on corridor or stairwell doors when pull side, single-point hold open is required
- Non-handed

2498, 9-2498, 12-2498 Push Side

- Track is mounted to underside of the frame stop
- The 351 closer is mounted to stop side of door
- Use on corridor or stairwell doors where push side, single-point hold open is required
- Non-handed

2478, 9-2478, 12-2478 Pull Side – Double Egress

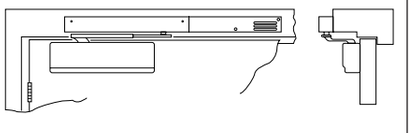

- Track is mounted to face of frame
- The 351 closer is mounted to hinge side of door
- Use on double egress openings when pull side hold open is required
- Double egress arm for reveal of 1/8" (3mm) to 3" (76mm) maximum
- Handed

For complete ordering information and minimum door sizes consult the 2408 Section of the Fire Guard catalog.

Product Systems Manual 2900 Series Fire Guard® Multi-Point Closer-Holder

SARGENT
1-800-727-5477
www.sargentlock.com

Fire and building codes require a door to be self-closing to stop the spread of fire and smoke. The Fire Guard® Series of hydraulic multi-point hold open closer is designed for use on corridor, stairwell doors, patient room doors and labeled doors with over 110˚ opening.

Features

- Conforms to standards UL 10C and UBC 7-2 (1997), Positive Pressure Fire Tests of door assemblies
- UL Listed and cUL Listed to Canadian Safety Standards for use on fire doors
- Available in EB, ED, EN, EP and EAB finishes
- Full metal cover, only 2-9/16" (65mm) projection from frame
- 2 year limited warranty
- Holder operation
  - Fail Safe operation
  - Multi-point hold open from 70° to 170°, trim permitting
  - Push, pull or double egress installations
  - Regular arm for push side
  - Track type for pull, swing free or double egress
  - Steel mounting plate accommodates surface or concealed wiring
  - Use of auxiliary door stop required
  - Self resetting fuse on circuit board
  - Remote release option
  - Terminal strip for ease of wiring
  - Maintained On/Off switch
  - Photoelectric smoke detector with LED indicator option
  - Operating voltages: 24VAC/VDC or 120VAC @ .25 Amp. per unit
- Closer
  - ANSI/ BHMA A156.4 Grade 1 Closer
  - Rack and pinion operation
  - Body is cast, one piece high strength aluminum/silicon alloy
  - Full size 1/8" (3mm) brass adjusting valves
  - Adjustable spring power
  - Adjustable closing and latching speeds
  - Adjustable backcheck
- Prefixes
  - 12- Prefix – Integrated photoelectric smoke detector
  - 9- Prefix – Companion unit for use with 12- on double doors, 24 VDC only
  - 80- Prefix – Adjustable hold open bypass switch allows hold open from 20° through full door opening. Not available for 9- or 2980 units
- Models
  - 2960 – Pull Side, handed
  - 2970 – Pull Side Double Egress, handed
  - 2980 – Pull Side Swing Free, handed
  - 2991 – Push Side, O Arm, handed
  - 2992 – Push Side, OZ Arm, handed
  - 2993 – Push Side, OZA Arm, handed
  - 2994 – Push Side, OY Arm, handed
  - 2995 – Push Side, OYA Arm, handed

UL Listing

- All smoke detector units (12-) have been tested and evaluated for public safety by Underwriters Laboratories and are listed for application on labeled fire doors
- All companion units (9-) and stand alone units are UL Listed for application with all compatible UL Listed fire and smoke detection equipment

Applications

2960, 9-2960, 12-2960 Pull Side

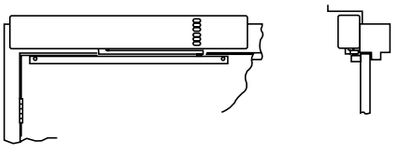

- Closer/Holder is mounted on head face of frame
- Track is mounted on surface of door, hinge side
- Use on corridor, stairwell doors and labeled doors which require over 110° opening
- Handed

2990, 9-2990, 12-2990 Push Side

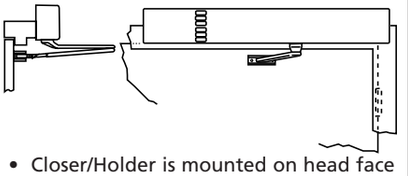

- Closer/Holder is mounted on head face of frame
- Track is mounted on surface of door, stop side
- Use on corridor, stairwell doors and labeled doors which require over 110° opening
- Handed

2970, 9-2970, 12-2970 Pull Side – Double Egress

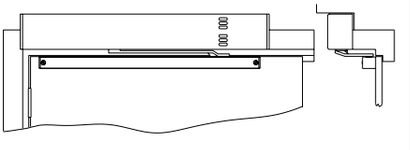

- Closer/Holder is mounted on head face of frame
- Track is mounted on hinge side of door
- Double egress arm for reveal of 1/8" (3mm) to 3" (76mm) maximum
- Use on corridor or stairwell doors when pull side, multi-point hold open is required
- Handed

For complete ordering information and minimum door sizes consult the 2900 Section of the Fire Guard catalog.

Product Systems Manual
Electromagnetic Door Holders

SARGENT
1-800-727-5477
www.sargentlock.com

Electromagnetic Door Holder

- Designed for use with self-closing fire and smoke barrier doors
- Used independently or with any fire or smoke detector system
- When de-activated, helps control the spread of fire and smoke by automatically releasing doors from an open position for simultaneous closing
- Fail-safe device: When electrical power fails doors will release to close automatically
- Conforms to devices outlined in National Fire Protection Agency Standards Nos. 80 and 101
- Designed to work with SARGENT door closers
- Recommended vertical location is on top rail of door – within 6" of lock stile edge
- When applications will not allow wall or floor magnets, consult SARGENT's Fire Guard catalog for our line of Electronic Closer Holders.
- Fits standard outlet box
- Holding force – 35 lbs typical
- Voltage and Current:
  120 VAC, 60 Hz., .020 amp
  24 VAC/DC, 60 Hz., .020 amp
  12 VDC, .040 amp
- Finish – EN
- Meets ANSI A156.15
- UL – UL Listed to U.S. and Canadian safety standards
- 1" (25mm) extension included standard to increase armature projection to 2-5/8" (67mm)

Wall Mount

1561 Flush Mount

1560 Surface Mount

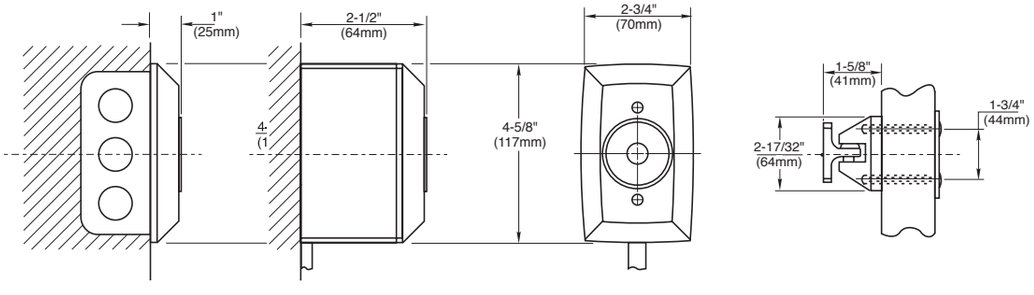

1561 1560

Floor Mount

1562 Single Floor Mount

1563 Double Floor Mount

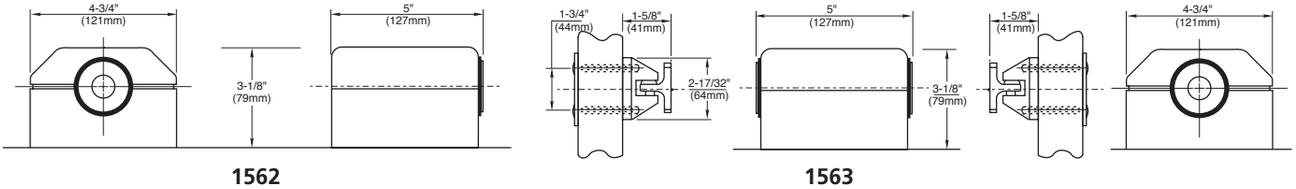

1562 1563

Product Systems Manual
Electromagnetic Locks & Accessories

SARGENT
1-800-727-5477
www.sargentlock.com

Features

- Hold door closed with 1200 lbs. of direct holding force
- Used for push or pull applications
- Stainless steel case
- Self aligning strike
- Hardened machine screws for mounting
- 10' integral cable for easy wiring
- Internal electronics
- .250 amp @ 12VDC, .125 amp @ 24VDC
- For use on exterior and interior openings
- Single and double door applications
- Accessories available for various frame conditions
- UL Listed, Auxiliary Lock and Releasing Device
- UL Recognized for Special Locking Arrangements
- Accepted for City of New York, Department of Buildings
- Temperature range: -40°F to +140°F (-40°C to +60°C)
- Fail safe operation
- Finishes: 28, 32D, EB, ED

Applications

1584 - Push Application - Single Door

- Metal dress covers supplied for 28, EB and ED finishes
- 1584 – 32D only
- 1584H – Includes dress cover for 28, EB and ED finishes

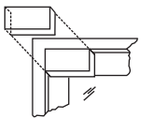

1585 - Push Application - Double Door

- Two electromagnetic locks with sensor
- 1585 – 32D only
- 1585J – includes 18" wide dress cover for 2 locks in 28, EB and ED finishes standard

1586 - Pull Application - Single Door

- Electromagnetic lock mounted on inswinging side of the door to protect it from physical assault
- "Z" bracket with cover in 28, EB and ED finishes supplied standard

1587 – Pull Application – Double Door

- Two electromagnetic locks with sensor
- Two "Z" brackets with covers in 28, EB and ED finishes supplied standard

Accessories

Header Extension Bracket
15-2107

- Dimensions: 3" x 3" x 8"
- Used to extend a narrow header
- Available in 28 or ED finishes

Concrete/Wood Frame Bracket
15-2113

- Thickness: 1/2"
- Allows mounting on concrete filled or wood door frames
- Sheet metal or wood screws for mounting
- Available in 28 or ED finishes

Stop Filler Plates

- Dimensions: 8" x 1-1/4"
- Extends the stop when only part of the magnet body is on the stop
- Various thicknesses available: 1/4" (15-2109), 3/8" (15-2110), 1/2" (15-2111), and 5/8" (15-2112)
- Available in 28 or ED finishes

Pull "Z" Bracket
15-2114

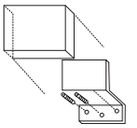

- Allows mounting of electromagnetic lock on inswinging doors
- Bracket includes cover providing attractive finish appearance

Full Length Housing

- Available for double doors without vertical rod exit devices or mullion
- 15-2116 – double horizontal (96" standard)
- 15-2117 – double vertical (96" standard)
- Specify door opening width
- Available in 32D only

Dress Covers

- 15-0078 for single electromagnetic lock
- 15-0079 for double electromagnetic lock
- Provides finished look to electromagnetic locks
- Available in EN, EB, and 28 finishes

Product Systems Manual
Power Supplies & Accessories

SARGENT
1-800-727-5477
www.sargentlock.com

Used to provide necessary power requirements to all of SARGENT'S hardware products, including electromechanical locks. The 3510, 3530 Series and 3560 are 24VDC Regulated Power Supplies. To calculate how many loads can be operated from one power supply, add the various amperage requirements of each load. These power supplies are recommended when using a SARGENT System.

3510 Power Supply

- 24VDC, 1.8AMP regulated and filtered power supply
- UL Listed for Class II applications
- Approximate size: 8-1/8"W x 10-1/8"H x 4-1/8"D

Standard Features for 3530 Series Power Supplies

- Modular in design
- 24VDC, 2 amp regulated and filtered power supply
- Contains SPDT relay which can be used for fire alarm tie-in or auxiliary output relay
- UL Listed (3530, 3531, 3532, 3533)

3530
- Approximate size: 12" x 12" x 6"

3531
- Includes timer board (52-2007)
- Approximate size: 12" x 12" x 6"

3532
- Includes larger housing. Offers expandability into battery backup option
- Approximate size: 16" x 12" x 6"

3533
- Includes timer board (52-2007) and larger housing. Offers expandability into battery backup option
- Approximate size: 16" x 12" x 6"

Battery Backup Kit for 3532 and 3533 Only

735
- Includes battery backup module and battery pack
- 10 amp hour capacity

Timer Delay Module (52-2007)

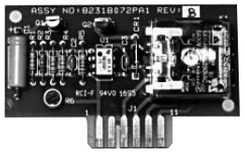

- For use with 3530 Series power supplies
- Allows delay on relock (1-60 seconds)
- Form "C" relay output to control electric lock

Battery Backup Module (52-2290)

- For use with 3532, 3533 power supplies
- Circuitry optimally controls charge and hold cycle for lead acid batteries
- Monitors and controls output voltage and current
- Three charge states: high current, over charge and standby state

Battery Pack (52-2058)

- For use with 3532 and 3533 power supplies
- Sealed lead acid batteries
- To determine total backup power time, divide amp hour capacity of battery by total current rating of locking devices

Product Systems Manual
Power Supplies and Power Transfer

SARGENT
1-800-727-5477
www.sargentlock.com

3560 Power Supply

- 24VDC, 7.2 amp regulated and filtered power supply
- Operable units vary based on wire runs, wire gage and devices being used
- Approximate size: 12"W x 16"H x 6"D
- UL Listed

Features of 3267

The 3267 provides filtered and regulated 9 VDC remote power for profile series locks and alarmed exit hardware products (550, 5100, 5800, 12-5800, AL-80 Series)

- Can supply power to: 2 profile series locks; 6 alarmed exit devices (550, 5100, 5800 or 12-5800); or 10 AL-80 series devices
- Can be used with all prefixes (91-, 92-, 93-, 94- prefixes)
- Outside dimension: 6" x 8" x 3"
- Voltage: 9VDC 700 mA output – 120VAC Input
- UL / cUL Listed, Class II
- Optional 12 VDC Gel Cell battery allows for continuous operation in event of a power failure
- Includes: Plug-In wall transformer (52-0255) and (52-0258) 12' (3.6m) of shielded wire for connection between power transfer and power supply

* Recommended for new opening. Retrofit application may require surface mount wire mold and transfer loop by others.

3267 Replacement Parts

52-0255 Plug-In Wall Transformer

- Output 16.5 VAC, 2.4 Amps
- UL/cUL Listed
- Provides input power to Model 3267 Remote Power supply module

52-0258

- Cable Assembly-Power Supply to Power Transfer
- 12' (3.6m) shielded cable from the power to the power supply

52-2498

- 9 VDC, 700 mA Power Supply circuit board
- Replacement circuit board assembly

52-0256 Gel Cell Battery

- Optional for 3267 Remote Power supply
- Provides for continuous operation of Profile Series and Alarmed Exit devices in the event of a power failure
- 12 VDC 1.2 A/Hr rating
- 10,000 cycles typical in the event of power failure

TA2314/TA2714 Concealed Circuit Hinge

- 4-1/2" x 4-1/2" – CC4
- 1 amp Capacity – Low Voltage 24V per circuit
- Full Mortise
- 4 Wire – 28 gage
- Wires contained within hinge - invisible and tamperproof
- Available in PC or 26D (for TA2714); 26D (for TA2314)
- Consult McKINNEY catalog for additional sizes, finishes and styles

TA714 Concealed Circuit Hinge

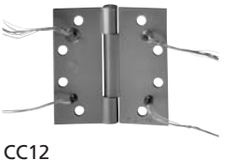

- 4-1/2" x 4-1/2" – CC12
- 1 amp Capacity – Low Voltage 24V per circuit
- 12 Wire 28 gage Power Transfer required when all options are used for Electroguard®
- Wires contained within hinge – invisible and tamperproof
- Available in PC or 26D

3261 Armored Door Loop

- Used to transfer power from frame to door stile
- 3 wire capability, 22 gage wire contained in loop
- 18" armored loop cable
- 1/4" diameter flex tubing
- Surface mount power transfer

Product Systems Manual
Sample Application

SARGENT
1-800-727-5477
www.sargentlock.com

Operation

This SARGENT System is designed for an area that requires authorized entry. SARGENT keypad 4291 (for interior door applications) unlocks (dogs) the latch retraction exit device for authorized entry when the correct access code is used.

The 4414 remote monitoring console serves two purposes. It locks/unlocks (dogs/undogs) the latch retraction exit device from a remote location and indicates the status (locked/unlocked) on the monitor panel. If additional monitoring of the door status and latch status is required, an electric hinge, door status switch, or a monitor strike can be used.

The 3510 power supply is used to supply 24VDC, 1.8 amps regulated power to the system. Depending on power requirements, a 3560 power supply may be required. In case of power failure, this System comes equipped with a 704 ET lever handle control to provide key access from the exterior.

Basic Components For A Single Door System

Locking Devices

Electromechanical Exit Device Trim (773, 774, 775, 776)

Electromechanical Mortise Lock (7800/ 8200)

Electromechanical Cylindrical Lock (8/10 Line)

Electromagnetic Lock (1584/1585)

Latch Retraction (56-)

Electroguard® (59-)

Access Control Devices

Keypad (4291, 4292)

Key Switch (4370 Series)

Push Button (4241)

Power Supplies

3510 (24VDC @ 1.8 amps Regulated)

3530 Series (24VDC @ 2.0 amps Regulated)

3560 (24VDC @ 7.2 amps Regulated)

3263 (9VDC @ 1.5 amps)

Remote Monitor/Control

Control and Monitoring Panel (4414 or 4418 with Junction Box)

Horn (4380H)

Switches

Signal Switch (55-prefix)

Exit Device Delayed Egress (57-prefix)

Signal Switch in outside trim (54-700)

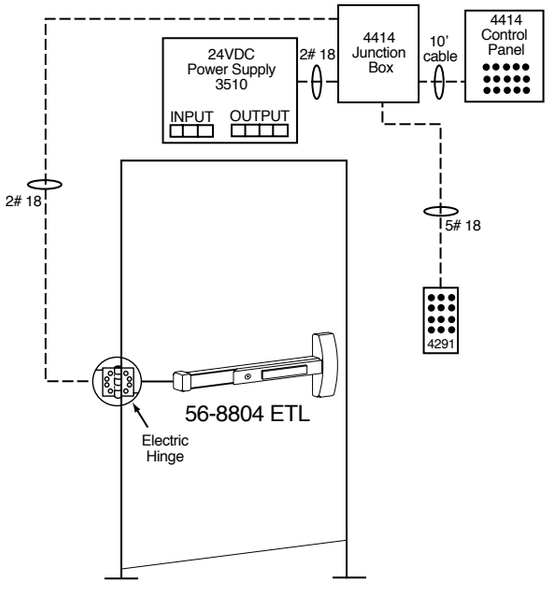

Product Systems Manual
System Worksheet

SARGENT
1-800-727-5477
www.sargentlock.com

Door # Sgl. Pr. Label Type Job Name:

Location:

Operation - Outside:

Operation - Inside:

LED (indicating lights) operation:

	08710	Other	N/A	Remarks
Conduit				
Junction Box				
Mortar Guards				
Wire Run				
Special Frame Prep				
Special Door Prep				
Power Supply				
Wire				
Wire Diagrams				
Riser Diagrams				
Automatic Door Assy.				
Installation				
Fire Alarm Tie-In				

Elevation Drawing – System Design—Electrical Accessories

___ [AH] Alarm Horn _____
___ [CR] Card Reader _____
___ [CON] Console _____
___ [EED] Electric ED _____
___ [EL] Electric Lock _____
___ [ES] Electric Strike _____
___ [EML] Elect. Mag. Lock _____
___ [FA] Fire Alarm _____
___ [KP] Keypad _____
___ [KS] Keyswitch _____

___ [MS] Magnetic Switch ____
___ [MDH] Mag. Dr. Holder _____
___ [MD] Motion Detector ____
___ [MH] Monitor Hinge _____
___ [MP] Monitor Pivot _____
___ [PS] Power Supply _____
___ [PT] Power Transfer _____
___ [PB] Push Button _____
___ [EC] Elect. Holder _____
___ [SH] Switch Hinge _____

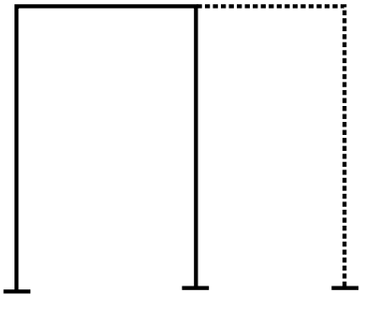

Product Systems Manual
General Information

SARGENT
1-800-727-5477
www.sargentlock.com

How to Order

A. Checklist for ordering 80 Series Electrical Exit Devices:

- Select style of device: rim, mortise, concealed vertical rod or surface vertical rod
- Select prefixes, function, trim, finish door width and door height

Examples: 12-59-8813, ETL x RHR x 04 x 42"W
59-8710 STS x LHR x 10B x 36"W x 84"H

1. Always specify door width. Rail assemblies are cut to specified door width at the factory.

Electrical Rail Assemblies

Prefix Option	Description	Min. Door Width Wide Stile	*Min. Door Width Narrow Stile	Min. Door Width Low Profile
*AL-	Alarmed Exit	36"	36"	N/A
55-	Signal Switch	27"	24"	
56-	Latch Retraction	32"	33"	36"
*57-	Delayed Egress	36"	36"	N/A
58-	Electric Dogging	24"	24"	
*59-	Electroguard®	36"	36"	N/A

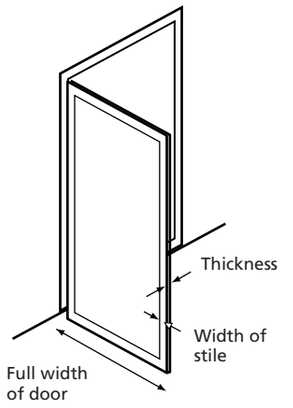

*8300 follows "wide stile" door width dimension

2. Specify stile width and door width when ordering a 55-8895 (active push bar with switch).
3. Specify door height for surface concealed vertical rod devices.
4. Specify any threshold information for vertical rods. If no threshold information is indicated, exit device will be furnished for use without threshold.

B. Checklist for ordering 2408/2900 Series closer holders.
Specify hand, voltage, finish, push or pull application and any prefix options.

C. Checklist for ordering electromechanical locks.
Specify hand, finish, rose, lever or knob design and any prefix options.

*Not available with low profile exit devices (LP/LR/LS8600), concealed center top latch exit devices (PP/PR/SP8600) or surface center top latch exit devices (PP/PR/SP/NB8700).

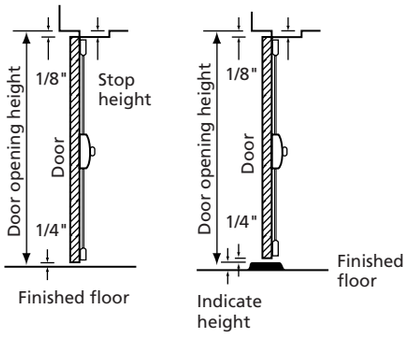

Additional Information

A. Available in respective catalog sections of the complete SARGENT catalog.

SARGENT Manufacturing Company • 100 Sargent Drive • P.O. Box 9725 • New Haven • CT 06536-0915
Phone: 800-727-5477 • Fax: 888-863-5054 • Web site: www.sargentlock.com
SARGENT of Canada • Phone: 905-940-2040 • Fax: 905-940-3242 • Web site: www.sargentcanada.ca

Founded in 1864, SARGENT® is a market leader in locks, cylinders, door closers, exit devices, electro-mechanical products and access control systems for new construction, renovation and replacement applications. The company's customer base includes commercial construction, institutional and industrial markets.

The ASSA ABLOY Group is the world's leading manufacturer and supplier of locking solutions, dedicated to satisfying end-user needs for security, safety and convenience.

An ASSA ABLOY Group company

ASSA ABLOY