SARGENT®

90 Series Exit Devices

An ASSA ABLOY Group company

ASSA ABLOY

SARGENT
1-800-727-5477

Table of Contents

	Page
Features, Applications and UL Fire Door Ratings	1
9700, 12-9700 Surface Vertical Rod	2
9800, 12-9800 Rim	3
9898 Reversible Rim (stock device)	4
9900, 12-9900 Mortise	5
Functions	6
Trim Designs	7-8
Coordinators, Auxiliary Controls, Strikes	9
Accessories – Thru-bolts and Mullions	10
General Information – Architectural Specifications	11
How to order	12

On The Cover

- SARGENT 9810 x US4 Rim Exit Device

90 Series Exit Devices
Features and Applications

SARGENT
1-800-727-5477

Features

- Full line of wide stile exit devices, including surface vertical rods, rim and mortise
- Maximum 4 1/2" (114mm) projection, minimum 2 3/4" (70mm) dogged
- All SARGENT exit devices can be masterkeyed or grand masterkeyed with any other SARGENT product
- All crossbar assemblies are brass, bronze or stainless steel
- Stainless steel springs throughout
- Simple lever principle with push type action
- Trim is thru bolted
- All exit devices meet ANSI standard 156.3, Grade 1
- UL Listed
- UL Listed to Canadian safety standards
- All fire exit hardware for hollow metal door applications listed up to 3 hour (A label) (Double Doors Require Astragal)
- All fire exit hardware for wood door applications listed up to 1 1/2 hour (B label) except where noted

Applications

Single Door

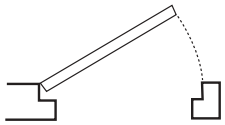

Rim Type 9800
Surface application.

Pairs of Doors without Mullion

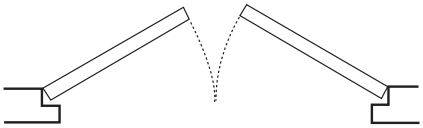

Vertical Rod Type 9700 - 2 Each
Surface applied 2 point locking both doors. Each door active. Do not use an overlapping astragal.

Pairs of Doors with 980 Mullion

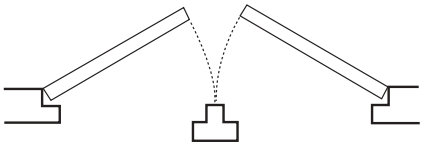

Rim Type 9800 - 2 Each
980 Mullion - 1 Each
Two independent active doors with full double door opening when required.

Pairs of Doors without Mullion

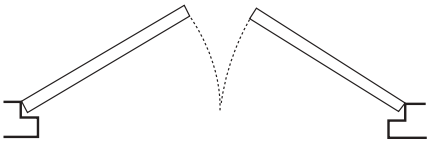

Vertical Rod Type 9700 - 1 Each
Rim Type 9800 - 1 Each
Both devices are surface applied.
A coordinator is recommended.

Maximum Door Openings & UL Fire Door Ratings

For available functions and outside trim, see charts for regular exit devices

• = Available				UL Fire Door Rating				
Application	Type Of Device	Series Device	Maximum Door Opening	(A) 3 Hour	(B) 1 1/2 Hour	(C) 3/4 Hour	(D) 1 1/2 Hour	(E) 3/4 Hour
Single Doors	Mortise	12-9900	4'0" X 10'0" (1219 X 3048)	•	•	•	•	•
	Rim	12-9800	4'0" X 8'0" (1219 X 2438)	•	•	•	•	•
Pair of Doors Swinging in the same direction	Mortise and Surface Vertical Rod	12-9900 X 12-9700	8'0" X 8'0" (2438 X 2438)	•	•	•	•	•
	Two Rim With Mullion (12-980 available)	12-9800 X 12-9800	8'0" X 8'0" (2438 X 2438)	•	•	•	•	•
	*Two Surface Vertical Rod No astragal No coordinator	12-9700 X 12-9700	8'0" X 8'0" (2438 X 2438)	•	•	•	•	•
Double Egress Pair of Doors Swinging in opposite directions	*Two Surface Vertical Rod	12-9700 X 12-9700	8'0" X 8'0" (2438 X 2438)	•	•	•	•	•

* Limited for Fire Doors listed by UL for this use. NFPA requires an astragal on 3 hour applications. Vertical rod applications will not work with astragal

90 Series Exit Devices
9700 Series
Surface Vertical Rod

SARGENT
1-800-727-5477

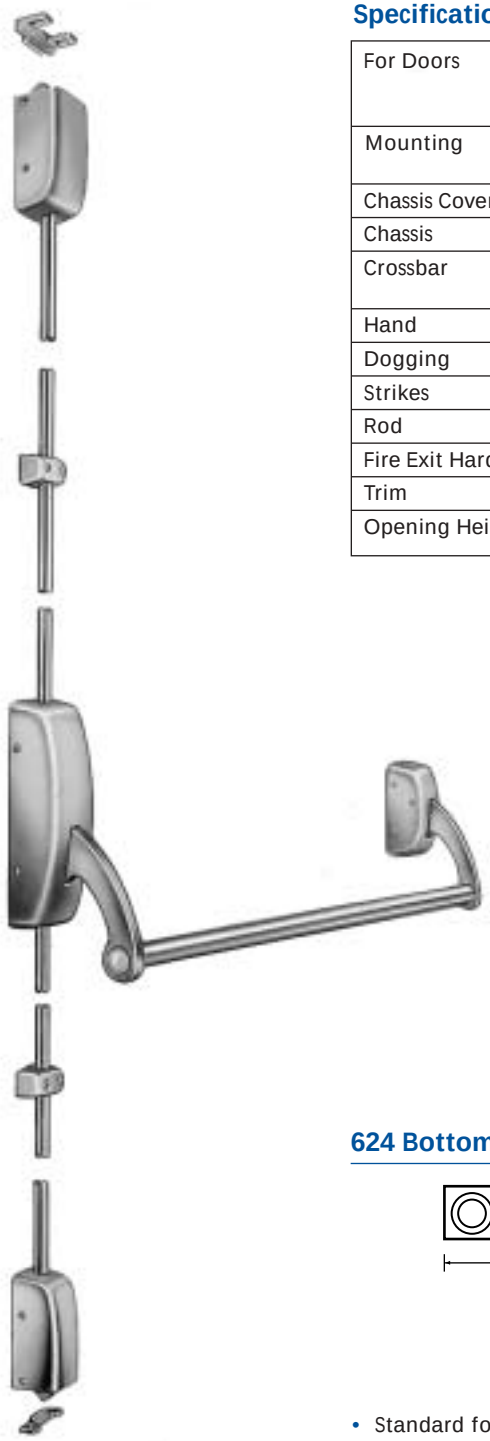

Specifications

For Doors	Wood or metal. 1 3/4" (44.5mm) thick standard. 2 1/4" (57mm) thick on order. Other door thickness, consult factory. 3" (76mm) minimum stile. **Maximum door height 96"**
Mounting	Supplied standard with wood and machine screws. Thru bolts available on order
Chassis Cover	Brass, bronze or stainless steel
Chassis	Nonferrous alloy
Crossbar	1" brass, bronze and stainless steel tubing. Available on order with steel reinforcement
Hand	Non Handed
Dogging	Standard Allen key dogging
Strikes	629 top strike and 624 bottom strike standard
Rod	1/2" brass, bronze or stainless steel
Fire Exit Hardware	See chart page 1
Trim	See Trim Designs section
Opening Height	84" (2134mm) Standard

14 Prefix

647 Strike

Bottom case has a sliding bolt held retracted by a latch retracting lever in the top case during the swing of the door. Bottom bolt has 7/16" (11mm) movement, with adjustable projection up to 3/4"(19mm).

624 Bottom Strike

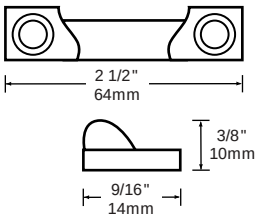

- Standard for 9700
- Applied to surface of floor or to a flat threshold
- Black nylon coated

629 Top Strike

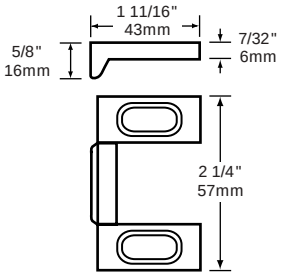

- Standard for 9700 and 14-9700
- Surface applied
- Black nylon coated

90 Series Exit Devices
9800 Series
Rim Type

SARGENT
1-800-727-5477

Specifications

For Doors	Wood or metal. 1 3/4" (44.5mm) thick standard. 2 1/4"(57mm) thick on order. Other door thickness, consult factory. 4 1/8" (105mm) miminum stile
Mounting	Supplied standard with wood and machine screws. Thru bolts available on order
Chassis Cover	Brass, bronze or stainless steel
Chassis	Nonferrous alloy
Crossbar	1" brass, bronze and stainless steel tubing. Available on order with steel reinforcement
Hand	Reversible
Dogging	Standard Allen key dogging
Strike	641 standard
Fire Exit Hardware	See chart page 1
Trim	See Trim Designs section

641 Strike

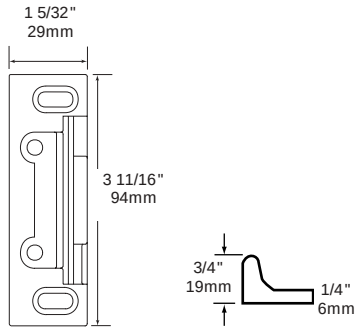

- Standard strike
- Surface applied
- Black nylon coated

649 Strike

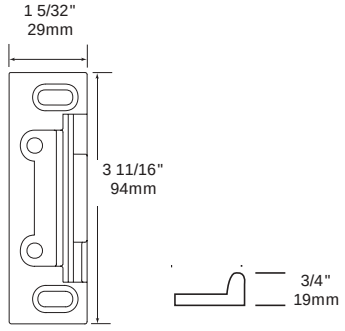

- For 12-9800
- Surface applied
- Black nylon coated

90 Series Exit Devices
9898 Series
Reversible Rim Type

SARGENT
1-800-727-5477

Specifications

For Doors	Wood or metal. 1 3/4" (44.5mm) thick standard. 2 1/4" (57mm) thick on order. Other door thickness, consult factory. 4 1/8" (105mm) miminum stile
Mounting	Supplied standard with wood and machine screws. Thru bolts available on order
Chassis Cover	Brass, bronze or stainless steel
Chassis	Nonferrous alloy
Crossbar	1" brass, bronze and stainless steel tubing. Available on order with steel reinforcement
Hand	Non Handed
Dogging	Standard Allen key dogging
Strike	641 Strike
Fire Exit Hardware	Not available
Trim	See below

Trim#	Function	Trim
98K	Key retracts latchbolt	PTB, STS
98T	Key locks/unlocks thumbpiece	PTB, STS
98D	Dummy trim	PTB, STS
98E	Blank plate	PTB

641 Strike

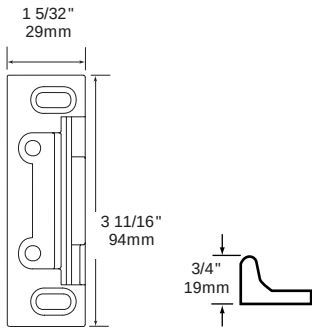

STS Trim

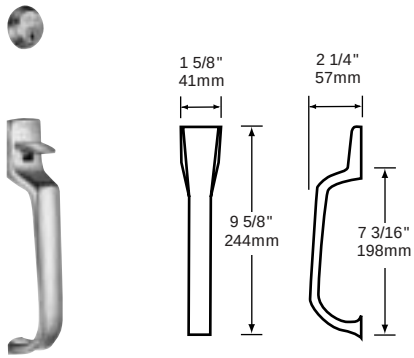

PTB Trim

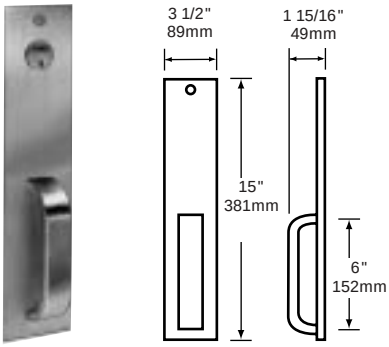

- Standard strike
- Surface applied
- Black nylon coated

90 Series Exit Devices
9900 Series
Mortise Lock Type

SARGENT
1-800-727-5477

Specifications

For Doors	Wood or metal. 1 3/4" (44.5mm) thick standard. Other door thickness, consult factory. 4 1/2" (114mm) miminum stile
Mounting	Supplied standard with wood and machine screws. Thru bolts available on order
Chassis Cover	Brass, bronze or stainless steel
Chassis	Nonferrous alloy
Crossbar	1" brass, bronze and stainless steel tubing. Available on order with steel reinforcement
Hand	Non-reversible, please specify when ordering
Mortise Lock	900 series, non-reversible
Dogging	Standard Allen key dogging
Strike	C908 standard
Fire Exit Hardware	See chart page 1
Trim	See Trim Designs section

C908 Strike

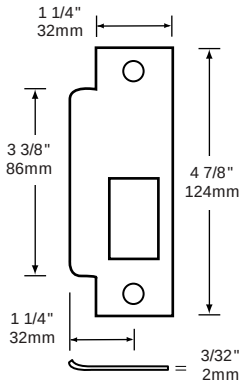

- Curved lip ANSI A115.1
- Handed. 1 1/4" lip standard
- Longer, lips in increments of 1/4" through 2 7/8" available
- Black nylon coated

815 Open Back Strike

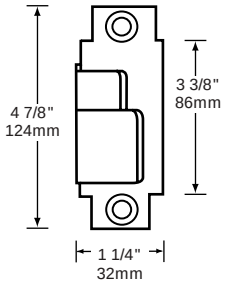

- ANSI A115.14 Open Back
- Beveled 1/8" in 2"
- Specify hand of active door
- "B" label
- Required for pairs of doors with 9700 and 9900 on pair
- Black nylon coated

90 Series Exit Device Functions

SARGENT
1-800-727-5477

# = ANSI Function	9700 12-9700	9800 12-9800	9900 12-9900
10 No outside operation. Dummy trim available	710 ET STS, PTB, MAL, FLL, FLW, 01 02	710 ET STS, PTB, MAL, FLL, FLW, 01 02	710 ET STS, PTB, MAL, FLL, FLW, 01 02
04 Key retracts latchbolt		704 ET STS, PTB, MAL, FLL, FLW, 03 04	704 ET STS, PTB, MAL, FLL, FLW, 03 04
06 Key operates outside trim	706 ET PRK 09		
13 Key locks/unlocks lever	713 ET PRK 08	713 ET PRK 08	713 ET PRK 08
15 Trim always operable	715 ET PRK	715 ET PRK	715 ET PRK
28 Outside thumb piece always operable	STS, PTB, MAL, FLL, FLW	STS, PTB, MAL, FLL, FLW	STS, PTB, MAL, FLL, FLW
63 Key locks/unlocks thumb piece	STS, PTB, MAL, FLL, FLW 05	STS, PTB, MAL, FLL, FLW 05	STS, PTB, MAL, FLL, FLW 05
73 Power off unlocks thumb piece. No cylinder override	773 ET		
74 Power off locks lever. No cylinder override	774 ET		
75 Power off unlocks lever. Cylinder retracts latchbolt		*775 ET	775 ET
76 Power off locks lever. Cylinder retracts latchbolt		*776 ET	776 ET

*Non available in 12-prefix

90 Series Exit Devices
Trim Designs

SARGENT
1-800-727-5477

ET Lever Controls

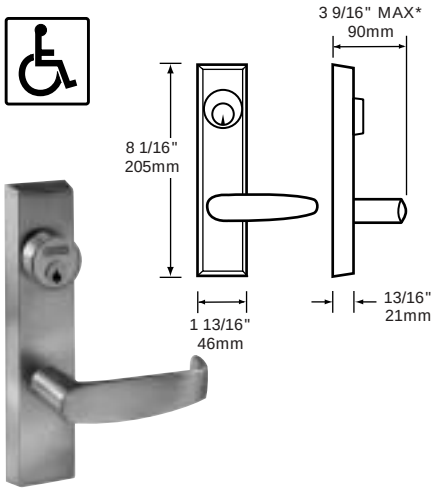

- Can be used with all SARGENT 80 Series exit devices. Easy operating lever handle allows convenient one hand operation

  Example shows 713 ET with "L" lever design (713 ETL)
- Not available in 32, 32D. Lever available in 32, 32D as option add
- ETL – 2 1/2" total projection
- Projection varies by lever design 2.5" (64mm) projection with L Lever

ETA (Handed)

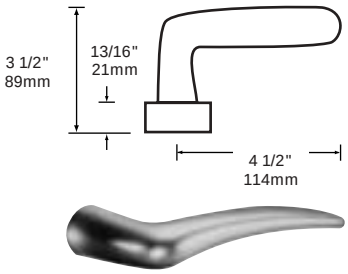

ETB

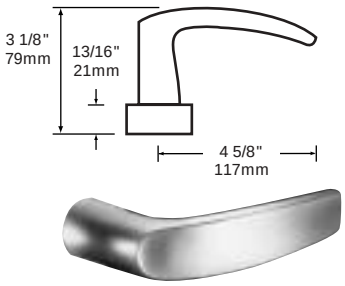

ETE

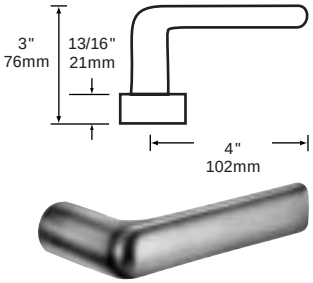

ETF

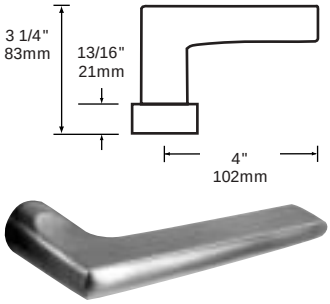

ETH (Hollow)

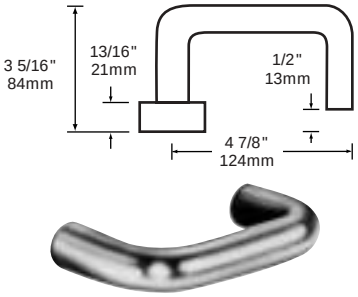

ETJ (Solid)

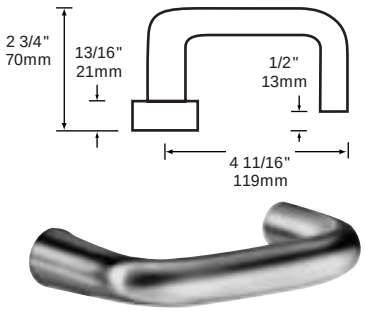

ETL

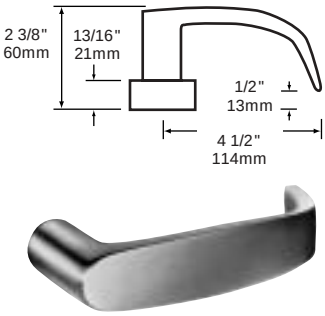

ETP

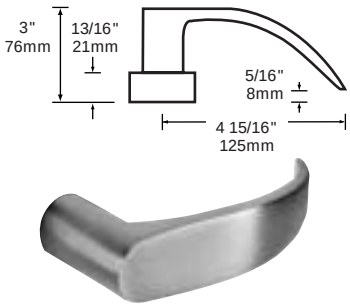

ETW

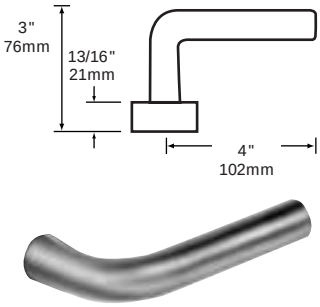

Pulls

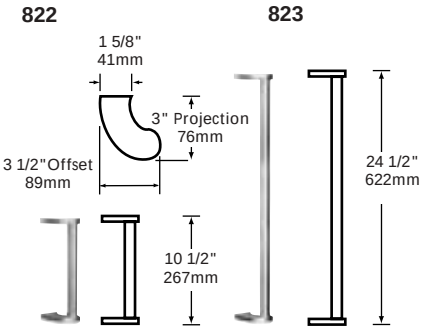

Not available in 32, 32D

90 Series Exit Devices
Trim Designs

SARGENT
1-800-727-5477

FLL

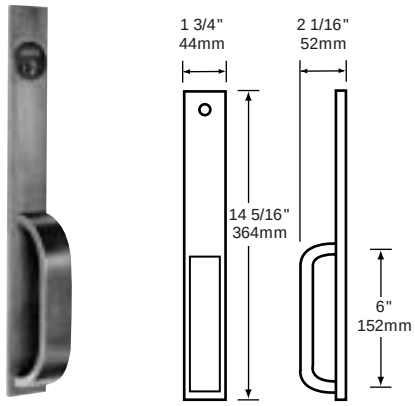

Trim Number	Function
874FLL	04
874FLLDT	10
884FLL	28
894FLL	62, 63, 70 & 71

FLW

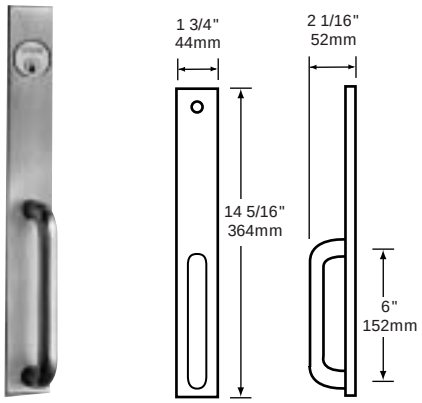

Trim Number	Function
813FLW	04
813FLWDT	10
843FLW	28
833FLW	62, 63, 70 & 71

Not available in 32, 32D

MAL

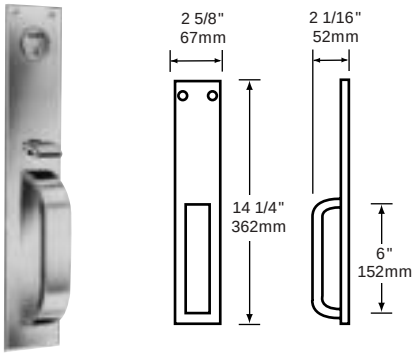

Trim Number	Function
818MAL	04
818MALDT	10
828MAL	28
838MAL	62, 63, 70 & 71

PRK

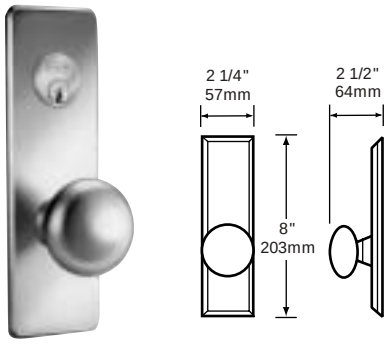

Trim Number	Function
819PRK	04
819PRKDT	10
829PRK	15
839PRK	06, 13,

Not available in 32, 32D

PTB

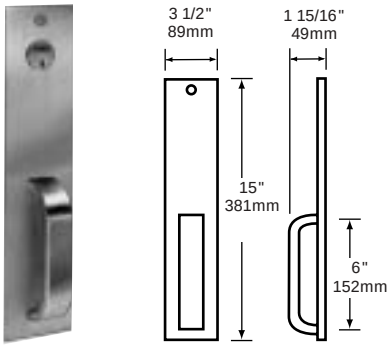

Trim Number	Function
812PTB	04
812PTBDT	10
842PTB	28
832PTB	62, 63, 70 & 71

STS

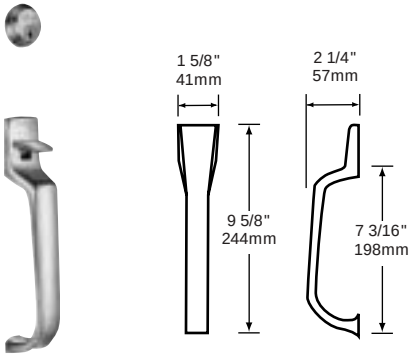

Trim Number	Function
876STS	04
876STSDT	10
886STS	28
896STS	62, 63, 70 & 71

Pulls above are Thru Bolted

Thru bolting of trim for exit device allows for perfect alignment of thumb pieces, cylinders and spindles. Thru bolts pass through the chassis of the devices and are bolted directly to the trim piece. Cylinder w/o pull or cylinder functions supplied with 97 cylinder collar.

ET Cover Plate

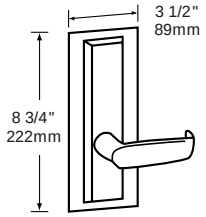

For all ET functions.

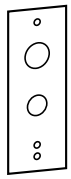

88-E-PTB

The 88-E-PTB is designed to be mounted behind the ET control to cover a stock hollow metal cutout.

3487/3488 Door Coordinators

- Prevents active door from closing before inactive door
- Meets Federal Specification FF-H-106a Type 836. Cast bronze with rubber rollers
- UL Labeled when used with Fire Exit Hardware
- 3487 (6 3/4" length; 171mm) for pairs of doors equipped with outside astragal
- 3488 (8 5/8" length; 219mm) for pairs of doors equipped with inside and outside astragals. Both include bracket and wear plate
- Packed with wood and machine screws
- Finishes: 10, 26D

3497 Carry Open Bar

For use with door coordinator. Aids in opening active door when inactive door is opened, and protects astragal and overlapping strike. Cast bronze. Packed with wear plate, wood and machine screws.

Finishes: 10, 26D

Vertical Rod Trim Auxiliary Outside Controls

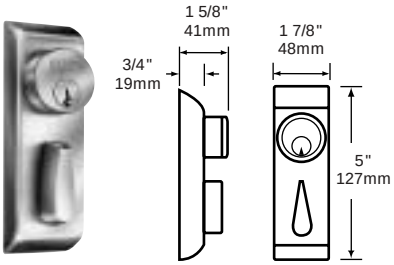

Can be used in conjunction with SARGENT mortise cylinders. Size 41 cylinder standard. Control operates with a turn lever allowing use with a door pull.

***Not for use on doors over 2 1/4".**

Auxiliary Control	Function
306	9710 and 12-9710. Operative only when key is in cylinder and turned.
313	For 9710 and 12-9710. Key locks or unlocks turn lever.

To order, specify device number as 10 function x control.

Example: 9710 x 306 x 32D
Finishes available: 3, 4, 10, 10B, 10BL, 20D, 26, 26D, 32 and 32D.

97-2378 for 9700 Inside Lever Assembly

Applies to inside of door on vertical rod applications. Packed standard with 306 and 313 auxiliary controls.

Alternate Strikes For 9700 Surface Rod Vertical Devices

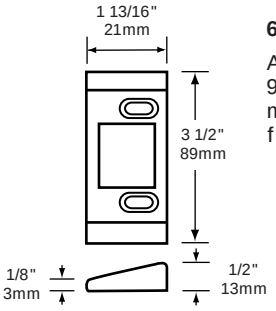

636

Alternate for 9700. Requires a mortise in the floor.

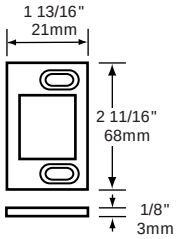

647

Standard for 14-9700. Requires no mortise in the floor and can be used with 9700.

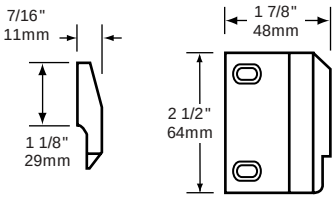

648

For doors having transom panel applications. Black nylon coated.

653

For 12-9700

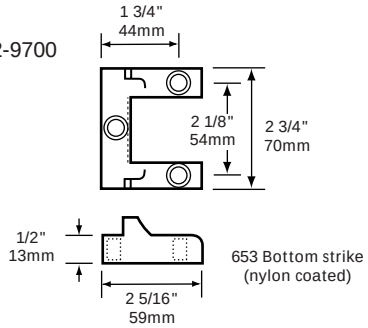

653 Bottom strike (nylon coated)

Alternate Strikes for Rim Devices 9800

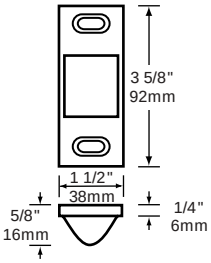

613

Half mortised. Nylon coating on face plate only. Specify hardware finish.

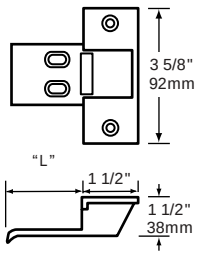

642

Full mortised. Dimension "L" equals door thickness plus 1/2". Nylon coating on lip only. Specify hardware finish.

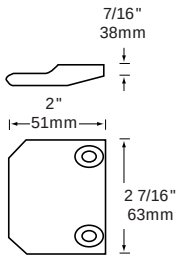

644

Surface applied. For use on pairs of doors without mullion. Black nylon coated.

Stock Hollow Metal Door Kits

543 Hollow Metal Door Kit is used for applying 9800 Exit Devices to metal doors and frames prepared for ANSI A115.2 cut-outs.

544 Hollow Metal Door Kit is used for applying 9800 Exit Devices to metal doors and frames prepared for ANSI A115.1 cut-outs.

Kits consist of a strike shim (for 1/2" stop), appropriate strike filler and lock front filler.

Thru Bolts

Device	Thru Bolts	*Ordering
9800	4	97-2578
9900	4	97-2578
12-9800	4	97-2578
12-9900	4	97-2578
9700	14	97-2579
12-9700	14	97-2596

***Specify Finish**

To order: Thru bolts, suffix TB to design symbol. Examples: 9804 FLL x TB or 9804 PRK x TB. Thru bolts and mortise nuts must be specified to mount fire exit devices on composite fire doors with steel, wood or plastic covering.

Note: PRK Trim–When PRK trim is ordered with 9700, 12-9700, 9800 9900 Series Exit Devices, placement of bolts at center case differs (see illustration)

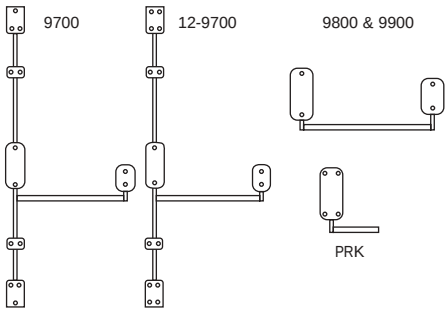

Center Bearing Bracket

All exit devices used on doors 48" wide and wider will be furnished with a matching center bearing bracket at an additional charge. This bracket assists in supporting the long crossbar and adds an extra spring to help counter balance the crossbar.

980 Removable Mullion

980 Extruded Aluminum (prime coat)

980A Aluminum (US28)

Consists of:

- mullion
- 511 Top Retainer
- 502 Bottom Retainer
- 96" (2438mm) stock size
- up to 120" (3048mm) size available

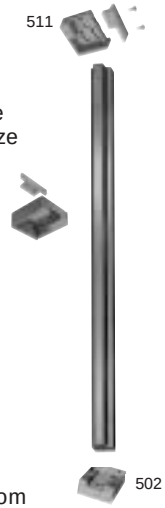

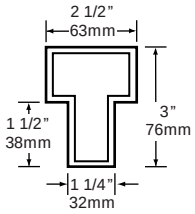

507 & 507A

Adapter for Narrow Transom Bars required when soffit is 1 1/4" (32mm) to 2" (51mm) wide.

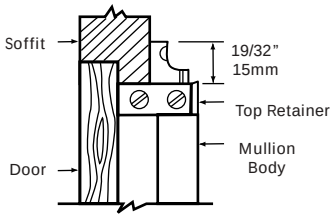

12-980 Mullion (96" Maximum)

For 12-9800

2"x 3" Channel Iron. Malleable iron top and bottom retainers. Standard length 96" (2438mm). Lengths from 97" to 120" (3048mm) do not carry U.L. fire label.

98-2312

Top and bottom retainer pack.

L980 Lockable Mullion

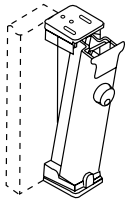

- Aluminum Prime Coat
- Used for non fire rated applications, exterior openings
- 96" (2438mm) stock size
- 120" (3048mm) available
- All cylinder prefixes available

L980A Lockable Mullion

- Anodized aluminum
- Non fire rated applications only
- 96" (2438mm) stock size
- 120" (3048mm) available
- All cylinder prefixes available

12-L980 Lockable Mullion

- Steel
- Fire rated for 8'0" x 8'0" (2438mm x 2438mm) paired openings
- 96" (2438mm) stock size
- 120" (3048mm) available
- All cylinder prefixes available

EL-980 Electric Lockable Mullion

- Steel
- For use with monitor or electric strikes
- Quick-Connect wiring supplied
- 96" (2438mm) stock size
- 120" (3048mm) available
- All cylinder prefixes available
- Not available in 12- prefix

Mullion Accessories

RK980 Latchbolt assembly retrofit kit with top and bottom retainers for 980 mullion

Retainer Packs

Product #	Description
98-2526	Top Ret. Pack for L980
98-2525	Bottom Ret. pack for L980
98-2558	Top Ret. Pack for 12-L980
98-2556	Bottom Ret. pack for 12-L980
98-2559	Top Ret. Pack for EL980

Check List for Ordering

Indicate the following door and frame information:

- Single doors, or pair of doors with mullion, or pair of doors without mullion.
- Door and frame material.
- Dimensions:
  - Door opening width
  - Stile width
  - Door thickness
  - Stop height

Example: Single Door x Hollow Metal Frame 36" x 5" x 2 1/4" x 1/2"

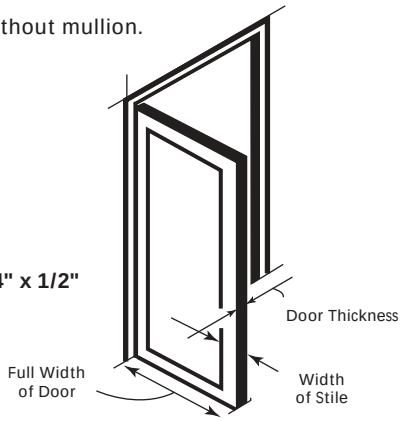

- If Vertical Rod Devices also indicate:
  - Door opening height
  - Threshold height
  - If no threshold is used, so state
  - Unless threshold information is indicated, exit device will be furnished for use without threshold.
- In ordering mullions (if other than stock 96" height) indicate height from finished floor to underside of stop.
- In ordering templates for hollow metal doors and/or frames, state job name on template order. Give template order number or template numbers on hardware order.

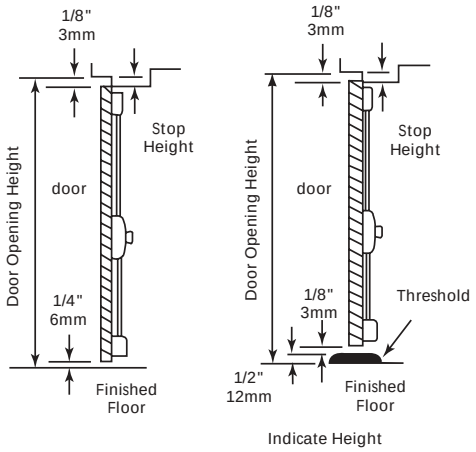

Finishes Available

SARGENT	Descriptions	BHMA	US Finish	Material
P	Primed For Paint	600	USP	Steel
3	Bright Brass, Clear Powder Coat	605	US3	Brass
4	Dull Brass, Clear Powder Coat	606	US4	Brass
9	Bright Bronze	611	US9	Bronze
10	Dull Bronze, Clear Powder Coat	612	US10	Bronze
10B	Antique Bronze, Oiled	613	US10B	Bronze
20D	Satuary Bronze, dark			
*32	Bright Stainless	628	US32	Stainless Steel
*32D	Dull Stainless	630	US32D	Stainless Steel

*NOTE: Arms Nickel Plated to match 32 and 32D

90 Series Exit Devices
How To Order

SARGENT
1-800-727-5477

Prefixes Available

10	Signature System
10-UL	Signature cylinder meeting UL437 (Mortise & Rim Cylinders only)
12	UL Fire Label Exit Devices
14	Sliding bolt bottom case for 9700 series
21	Construction key system (lost ball)
22	Construction key system (split key)
31	For doors up to 2 1/4" (except aux. Controls-see below) For doors over 2 1/4" For doors with panels For doors with auxiliary controls over 1 3/4"
36	6 Lobe security head screws
37	Spanner head screws
54	Internal micro switch in ET
60	Disposable construction cores
63	Exit device X SARGENT removable core cylinder includes master and grand masterkeying charges
64	Exit device X SARGENT removable construction core cylinder
65-73	6 pin uncombinated Arrow, Best, Falcon type cores (a, b, c, d, e, f, g, h, j, k, l, m keyways)
65-73P	7 pin uncombinated Arrow, Best, Falcon type cores (a, b, c, d, e, f, g, h, j, k, l, m keyways)
70	Exit device to accept Arrow, Best, Falcon interchangeable cores - plastic core provided
72	Exit device to accept Arrow, Best, Falcon interchangeable cores - construction core provided
73	Keyed to existing Arrow, Best, Falcon interchangeable core 6-pin
73-7P	Keyed to existing Arrow, Best, Falcon interchangeable core 7-pin
75	Warning inside-abrasive strip on rail
76	Knurled outside lever
77	Warning inside and outside- abrasive strip on rail and lever
82	Keso security cylinder (existing systems only)
83	Keso security removable core cylinder (existing systems only)
84	Keso security removable construction core cylinder (existing systems only)
SC	Exit device furnished in Schlage C keyway (rim and 1 1/8" Length mortise cylinders only)
SE	Exit device furnished in Schlage E keyway (rim and 1 1/8" Length mortise cylinders only)
VA	SARGENT V-10 Standard Cylinders
VC	SARGENT V-10 Interchangeable Core Cylinder
VS	SARGENT V-10 Standard Unassembled Cylinders
VCVS	SARGENT V-10 Interchangeable Core Unassembled Cylinders

Specify	Note	Example
Device Number	See Functions Section	9813
Trim	See Trim Designs	ETL
Door Width	Specify door width	36"
Thru Bolts	Add suffix to trim	TB
Strike	Specify if other than standard	
Hand	Specify LHRB or RHRB	LHRB
Finish	See Finish Chart	32D
Example:	9813 x ETL x TB x LHRB x 26D/32D x 36" Door	

Packaging

Product	Aug. WT	Case
Exit with trim	15 lbs.	1 ea
980 mullion	18 lbs.	1 ea
12-980 mullion	40 lbs.	1 ea

Suggested Architect's Specification

- All exit devices must be listed under "panic hardware" in accident equipment list of Underwriters' Laboratories
- All exit devices, regardless of type, shall be of matching design
- Crossbar must have minimum wall thickness of .062" or be reinforced
- Main arm pivots shall be stainless steel
- Springs shall be stainless steel
- Crossbars and arms shall be counter balanced by springs in both center case and hinge style cases
- All exit devices shall be of chassis mounted unit construction with removable covers
- Top and bottom rods of vertical rod devices shall be a minimum of 3/8" diameter
- Where labeled fire doors are used as exits, they must be equipped with labeled fire exit hardware
- All crossbars on exit devices to be locked down by inside dogging feature accomplished by depressing crossbar and turning key

Hand

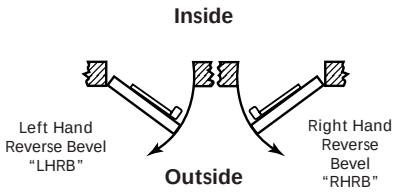

The ESSEX Total Openings People™

ESSEX

SARGENT Manufacturing Company • 100 Sargent Drive • P.O. Box 9725 • New Haven • CT 06536-0915
Phone: 800-727-5477 • Fax: 888-863-5054 • Web site: www.sargentlock.com
SARGENT of Canada • Phone: 905-940-2040 • Fax: 905-940-3242 • Web site: www.sargentcanada.ca

Founded in 1864, SARGENT® is a market leader in locksets, cylinders, door closers, exit devices, electro-mechanical products and access control systems for new construction, renovation and replacement applications. The company's customer base includes commercial construction, institutional and industrial markets.

The ASSA ABLOY Group is the world's leading manufacturer and supplier of locking solutions, dedicated to satisfying end-user needs for security, safety and convenience.