SARGENT®

Alarmed Exit Hardware

An ASSA ABLOY Group company

ASSA ABLOY

Alarmed Exit Hardware

SARGENT
1-800-727-5477
www.sargentlock.com

Table of Contents

540/550 Series Exit Alarms 1
5100 Series Alarmed Exit Lock 2
5800 & 12-5800 Series Alarmed Exit Lock 3
Functions 4
Narrow Stile Mounting Plates/Accessories 5
Accessories and Prefixes 6
Architectural Specifications, How To Order & Finishes 7

ELECTRO Lynx™

Hardwiring Made Easy™

As part of their promise to provide innovative, fast and effective, and higher security solutions to their customers, ASSA ABLOY Group companies offer ElectroLynx, a universal quick-connect system that simplifies the electrification of the door opening.

ElectroLynx™ is a registered trademark of ASSA ABLOY North America, Inc.

On The Cover

- SARGENT 5810 Alarmed Exit Hardware

Alarmed Exit Hardware
540/550 Series Exit Alarms

SARGENT
1-800-727-5477
www.sargentlock.com

The 540 and 550 Series alarms are equipped with a horn which is activated by unauthorized egress or the removal of the cover. The horn, once activated, will sound for two minutes, then shut off automatically and re-arm itself.

540 Series

32-7023
Magnet Pack
(Included with unit)

550 Series

Application Diagrams

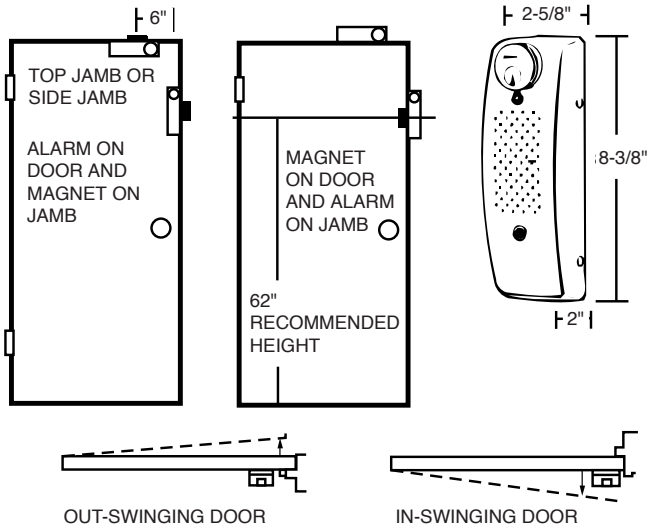

Features of 540/550 Alarms

Materials	Cover and base are nonferrous alloys
For Doors	1-3/4" thick standard with a 4" minimum stile width. Furnished with combination screws
Electronics	Modern solid state circuitry, for continuous reliable operation
Power Source	Battery powered by a 9 volt alkaline-type. Quick disconnect mounting is provided for fast, easy battery maintenance. Current draw is 100 mA.
Alarms	A high frequency horn (120 Db) is provided to cover a wide range of hearing sensitivities. Horn is activated by any unauthorized egress or the attempted removal of the cover. The horn, once activated, will sound for two minutes, then shut off and automatically rearm.
Outside Cylinder Operation	Units can be armed or disarmed from outside. Order separately as 34 Rim Cylinder.
Inside Cylinder Operation	Key inside arms or disarms unit. Turning the key moves the colored arm indicator into view. This indicates the unit is armed. A 41 Mortise Cylinder is provided.
Painted Finishes	Aluminum (PEN), Bronze (PEB), Red (ERD), Brass (EAB)
Plated Finishes	10, 10B, 26, 26D

Features of 540 only

Push Button	A push button is provided to determine available battery power

Features of 550 only

Delay Feature	Authorized exit is permitted for approximately 15 seconds after activation without sounding the alarm. The horn, once activated, will sound for two minutes, then shut off and automatically rearm itself. An optional continuous alarm is available on order.
Memory LED Light	A red LED alarm light is provided which flashes to make any violation visible. The LED will continue to flash beyond the two minute alarm cycle to indicate where the violation has occurred. The LED light can be turned off only by key operation. Turning key clockwise, then counterclockwise will clear memory LED and rearm unit.
Low Battery	The horn will “chirp” on an intermittent alert basis, indicating a low battery power condition. Replace battery.

To Order	Specify	Example
540/550 Device	540 or 550 x finish	540 x PEN

SARGENT
1-800-727-5477
www.sargentlock.com

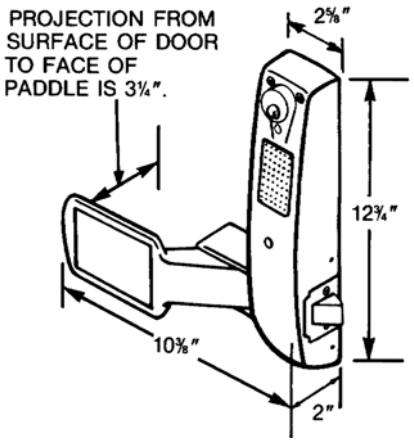

5100 Series

Features of the 5100 Alarmed Exit Lock

Materials	Paddle, cover and chassis are nonferrous alloys
For Doors	1-3/4" thick standard with a 4-1/2" minimum stile width. Furnished with wood and machine screws. Through-bolts and mortise nuts are available on order.
Hand	Reversible. Exit alarms are packed right hand reverse bevel (RHRB).
Strike	641
Electronics	Modern, solid state circuitry
Power Source	Battery powered by a 9 volt alkaline-type. Quick disconnect is provided for fast, easy battery maintenance. Current draw is 130 mA.
Alarm	Dual frequency pulsating-type horns are provided to cover a wide range of hearing sensitivities. Horns are activated by any unauthorized latchbolt movement or the attempted removal of the cover. Authorized exit is permitted for approximately 15 seconds after activation to permit a person to pass through the door without sounding the alarm. The horns, once activated, will sound for approximately two minutes, then shut off and automatically rearm. An optional continuous alarm is available on order.
Memory LED Light	A red LED alarm light is provided which flashes to indicate a violation has occurred. The LED will continue to flash beyond the alarm cycle to indicate where the violation has occurred. The LED light can be turned off only by inside key operation.
Low Battery Alert	The horn will "chirp" on an intermittent basis
Latchbolt	Stainless steel. A full 3/4" bolt is monitored by an electronic sensing system.
Cylinder Operation	Key inside arms and disarms unit. The horn will emit a short "chirp" as the colored alarm indicator flag is switched to the ON position. The unit has a 15 second delay feature to allow for exit. Mortise cylinder 41 furnished. The latchbolt can be retracted from the outside only. A 15 second delay feature allows the key holder to enter without the alarm being sounded. If a violation has occurred, the LED alarm light will be unaffected by the outside cylinder operation. Specify alarm series x 04 function. Rim Cylinder 34 furnished.
UL Listed	For Exit Lock (FUQV)
ANSI Standards	5100 conforms to A156.5. Complies with A117.1 for Accessibility Standards.
Painted Finishes	Aluminum (PEN), Bronze (PEB), Red (ERD), Brass (EAB)
Plated Finishes	10, 10B, 26, 26D

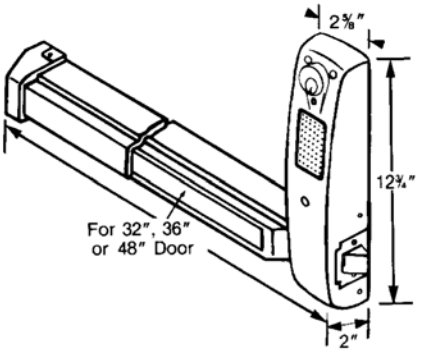

5800 Series

Features of 5800 & 12-5800

Materials	Touch bar assembly (5800 & 12-5800) is rolled steel. Cover and chassis are nonferrous alloys.
For Doors	1-3/4" thick standard with a 4-1/2" minimum stile width. Furnished with wood and machine screws. Through-bolts and mortise nuts are available on order.
Touch Bar	Specify "E" for 24"-32" doors, "F" for 30"-36"doors, or "G" for 36"-48" wide doors. The 5800 Series furnished with lock down feature. The 12-5800 Series furnished less lock down feature.
Hand	Reversible. Exit alarms are packed right hand reverse bevel (RHRB).
Strike	649
Electronics	Modern, solid state circuitry
Power Source	Battery powered by a 9 volt alkaline-type. Quick disconnect is provided for fast, easy battery maintenance. Current draw is 130 mA.
Alarm	Dual frequency pulsating-type horns are provided to cover a wide range of hearing sensitivities. Horns are activated by any unauthorized latchbolt movement or the attempted removal of the cover. A 15 second delay feature allows the alarm to be activated while the door is open permitting a person to pass through the door without sounding the alarm. The horns, once activated, will sound for approximately two minutes, then shut off and automatically rearm. An optional continuous alarm is available on order.
Memory LED Light	A red LED alarm light is provided which flashes to indicate a violation has occurred. The LED will continue to flash beyond the alarm cycle to indicate where the violation has occurred. The LED light can be turned off only by inside key operation.
Low Battery Alert	The horn will "chirp" on an intermittent basis
Latchbolt	Stainless steel. A full 3/4" bolt is monitored by an electronic sensing system.
Cylinder Operation	Key inside arms and disarms unit. The horn will emit a short "chirp" as the colored alarm indicator flag is switched to the ON position. The unit has a 15 second delay feature to allow for exit. Mortise cylinder 41 furnished. The latchbolt can be retracted from the outside only. A 15 second delay feature allows the key holder to enter without the alarm being sounded. If a violation has occurred, the LED alarm light will be unaffected by the outside cylinder operation. Specify alarm series x 04 function. Rim Cylinder 34 furnished.
UL Listed	UL listed for Panic (FVSR). 12-5800 UL Listed for Panic and Fire Exit Hardware (GXHX).
ANSI Standards	5800/12-5800 conform to A156.3 and comply with A117.1 for Accessibility Standards
Painted Finishes	Aluminum (PEN), Bronze (PEB), Red (ERD), Brass (EAB)
Plated Finishes	10, 10B, 32, 32D

Alarmed Exit Hardware Functions

SARGENT
1-800-727-5477
www.sargentlock.com

Functions marked by 🔥 symbol are available as Fire Exit Hardware.

	10 Exit only. No Outside operation.	04 Key retracts latchbolt. Activating key will cause unit to enter 15 second delay mode.	13 Key locks or unlocks knob. Activating knob, will cause unit to enter 15 second delay mode.	15 Similar to 13 with no outside cylinder. Knob always operative. Activating knob will sound alarm.
5100	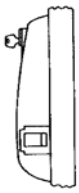	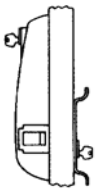	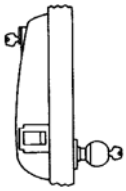	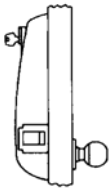
5800 **12-5800**	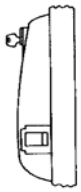	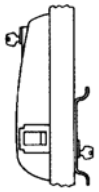	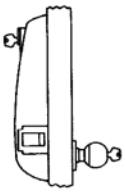	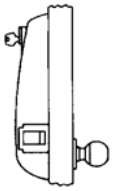
Trims **5100** **5800** **12-5800**	 28-D-LL	 28-K-LL 28-K-GTB 28-K-OB	 28-C-LL 28-C-OB	 28-L-LL 28-L-OB

OB Trim is not available in 32 or 32D

To cover a 161 cutout (Pull) 28-D-GTB, (Cover plate) 28-E-GTB or (Pull with cylinder cutout) 28-K-GTB may be used. This trim is furnished with 3 mortise nuts and screws for 1-3/4" doors. This trim is available in PEN or PEB finishes.
To order: 5104 x PEN x 28-K-GTB

Knob Trim: Designed to fit 161 preparation. Reversible. Packed standard as RHRB. Knob and key rotate counter-clockwise only.
To order: 5113 x 26D/PEN x OB

28-K-GTB

28-D-GTB

28-E-GTB

Narrow Stile Mounting Plates

3273
Narrow Stile Mounting
Plate for 540/550 Alarms

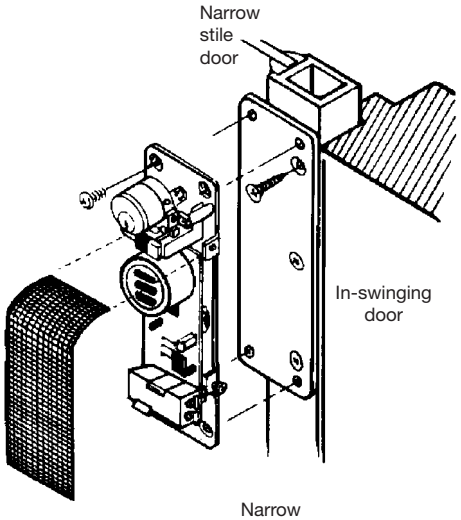

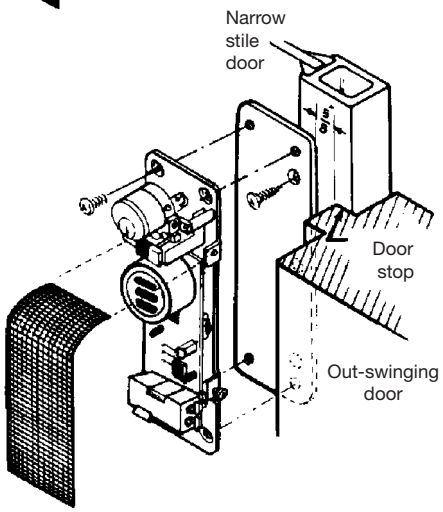

3274
Narrow Stile Mounting
Plate for 5100 device

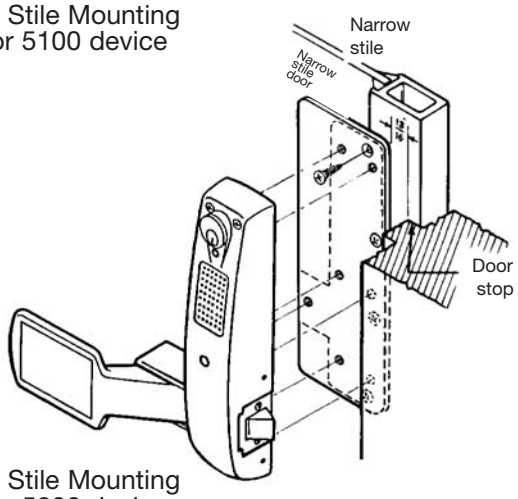

3275
Narrow Stile Mounting
Plate for 5800 device

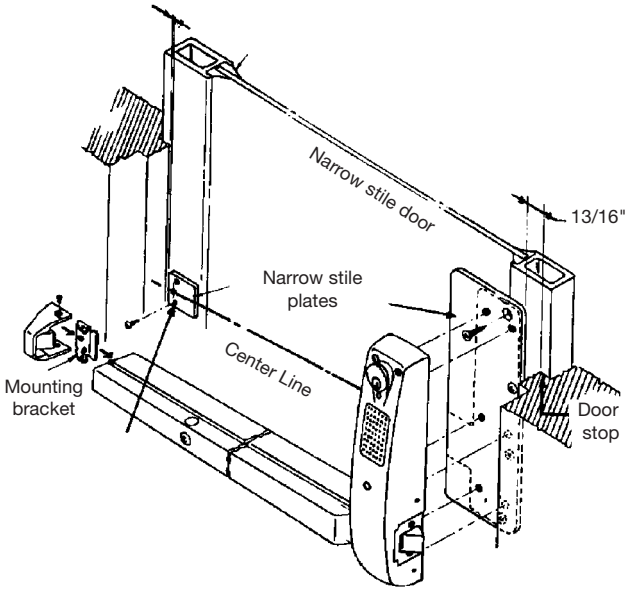

Accessories

3261 Armored Door Loop

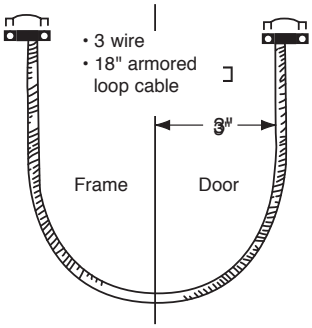

3285 Door Status Switch

• Surface applied

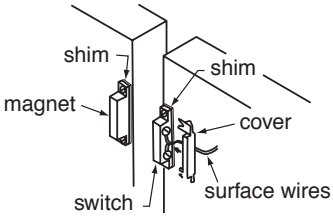

•• Not available for 540 Alarms

3287 Door Status Switch

• Concealed
• 3 Wire

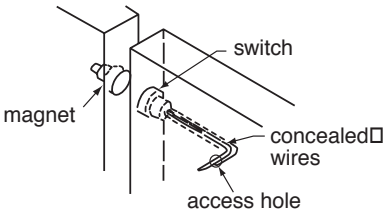

• Not available for 540 Alarms

Alarmed Exit Hardware Accessories and Prefixes

SARGENT
1-800-727-5477
www.sargentlock.com

Features of 3267

The 3267 provides filtered and regulated 9 VDC, 700 mA remote power for Profile Series locks and alarmed exit hardware products (550, 5100, 5800, 12-5800, AL-80 Series)

- Can supply power to: 2 Profile Series locks; 6 Alarmed Exit devices (550, 5100, 5800 or 12-5800); or 10 AL-80 Series devices
- Can be used with all prefixes (91-, 92-, 93-, 94- prefixes)
- Outside dimension: 6" x 8" x 3"
- Voltage: 9VDC 700 mA output – 120VAC Input
- UL / cUL Listed, Class II
- Optional 12 VDC Gel Cell battery allows for continuous operation in event of a power failure
- Includes: Plug-In wall transformer (52-0255) and (52-0258) 12' (3.6m) of shielded wire for connection between power transfer and power supply

* Recommended for new opening. Retrofit application may require surface mount wire mold and transfer loop by others.

3267 Replacement Parts

52-0255 Plug-In Wall Transformer

- Output 16.5 VAC, 2.4 Amps
- UL/cUL Listed
- Provides input power to Model 3267 Remote Power supply module

52-0258
- Cable Assembly-Power Supply to Power Transfer
- 12' (3.6m) shielded cable from the power to the power supply

52-2498
- 9 VDC, 700 mA Power Supply circuit board
- Replacement circuit board assembly

52-0256 Gel Cell Battery

- Optional for 3267 Remote Power supply
- Provides for continuous operation of Profile Series and Alarmed Exit devices in the event of a power failure
- 12 VDC 1.2 A/Hr rating
- 10,000 cycles typical in the event of power failure

Other Accessories

Outside Trim	Order with alarm series
Through-bolts	Suffix TB to alarm series
Outside Cylinder Operation	34 order separately (540/550 Series)
Inside Cylinder Operation	41 regularly furnished (540/550 Series)
Removable Mullion	Order separately
Narrow Stile	Order 3273 for 540/550 alarms
Mounting Plates	Order 3273 for 5100 Alarmed Exit Lock Order 3275 for 5800 Alarmed Exit
Armored Door Loop	Order 3261
Surface Switch	Order 3285
Concealed Switch	Order 3287
Conversion Kit	32-7164 (“10 to 04”)

Prefix Numbers

12	Fire Exit Hardware (available for 5800 only)	12-5810
91	Remote Power (N/A for 540)	91-5104
92	Remote Monitoring (N/A for 540)	92-550
93	Continuous Alarm (N/A for 540)	93-5110
94	Automatic Rearming (N/A for 540)	94-5813

Prefix Options

Remote Power (91-Prefix)
The 5100, 5800, 12-5800 Alarmed Exit Hardware and the 550 Exit Alarms are available for use with external power.

- Units furnished pre-wired with 8 foot leads and instructions for installation
- Can be used in conjunction with a 9VDC Hard Wired Power Supply (3267) or by other remote 9 volt power source

Remote Monitoring (92-Prefix)
The 550, 5800 and 12-5800 are available with remote monitoring.

- Units furnished pre-wired with 8 foot leads and instructions for installation
- Closed loop circuitry provides optimum security
- Monitors alarm status

Continuous Alarm (93-Prefix)
The 550, 5100, 5800 and 12-5800 are available with a continuous alarm.

- Horns sound continuously once unit enters alarm mode
- Only disarming by key will silence the alarm
- Remote power recommended

Automatic Rearming (94-Prefix)
The 550, 5100, 5800 and 12-5800 equipped with spring loaded on/off switch.

- Switch returns to “on” position after removal of key
- Alarm always on
- Can be added in the field (Order part 32-7097)

Hardwiring Made Easy™

ELECTRO Lynx™

Suggested Architectural Specifications

1. All alarms to be 9 volt battery powered
2. Devices to be equipped with piercing audible alarm signal
3. Forcing latchbolt will sound alarm
4. All devices to possess solid state electronics
5. All devices to be non-handed or reversible
6. Removing cover will sound alarm

How To Order

The proper ordering sequence consists of **Series, Function, Size** (if required) and **Finish**

To Order	Specify	Example
540/550 Device	540 or 550 x finish	5104 x PEN
5100 Device	51 x function x finish	5104 x PEB
5800, 12-5800 Device	58 or 12-58 x function x size (E, F or G). See specifications for sizes.	5804E x PEN 12-5813E x ERD
Remote power, monitoring, continuous alarm or automatic rearm	Add prefix 91, 92, 93, or 94 to series number	91-5104 x PEN 91-92-5813 x OB x 26D/PEN
Trim	Specify when ordering with device	5104 OB x 26D/PEN
Through-bolts	Suffix TB to device	5104 x PEN x 28-K-GTB x TB x PEN

Finishes

Symbol	Description
PED	Polyester Powder coated to match US20D
PEN	Polyester Powder coated to match US28
PEB	Polyester Powder coated to match US10B
ERD	Polyester Powder coated – Red
PEAB	Polyester Powder coated to match US3
10	Dull Bronze
10B	Oxidized Dull Bronze, oil rubbed
32	Bright Stainless Steel (Rail Assemblies)
32D	Dull Stainless Steel (Rail Assemblies)

HANDING CHART

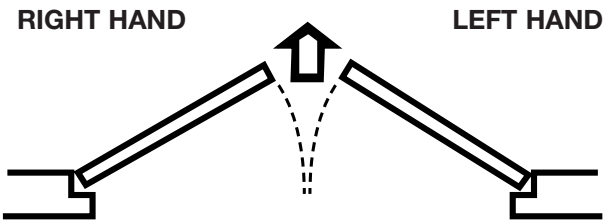

SARGENT Manufacturing Company • 100 Sargent Drive • P.O. Box 9725 • New Haven • CT 06536-0915
Phone: 800-727-5477 • Fax: 888-863-5054 • Web site: www.sargentlock.com
SARGENT of Canada • Phone: 905-940-2040 • Fax: 905-940-3242 • Web site: www.sargentcanada.ca

Founded in 1864, SARGENT® is a market leader in locksets, cylinders, door closers, exit devices, electro-mechanical products and access control systems for new construction, renovation and replacement applications. The company's customer base includes commercial construction, institutional and industrial markets.

The ASSA ABLOY Group is the world's leading manufacturer and supplier of locking solutions, dedicated to satisfying end-user needs for security, safety and convenience.