RIXSON®

Shallow Depth Floor Closers

Complete Door Control

for Interior Doors

Where Concealment

Is Desired

General Information

Introduction

Rixson's shallow depth floor closers are recommended for low to medium traffic interior doors where traditional floor closer depth is too great for slab construction. Not recommended for high-frequency or exterior doors.

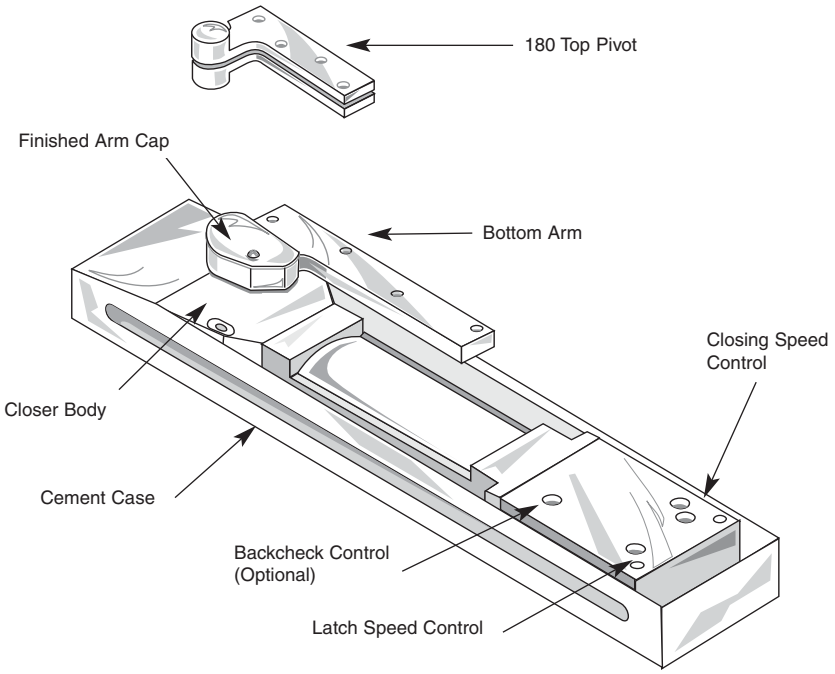

Features

- Shallow depth case [2"(51mm)] allows installation in thin slab floor construction
- Available offset (51), center (50), or independently hung (53)
- Spring sizes to accommodate doors up to 4'0"(1219mm) wide
- non hold-open models will swing to 180° (offset hung) and 135° (center hung) trim permitting
- Hold open models available
- Separate and independent latch and closing speed valves
- Fully adjustable hydraulic backcheck (BC) (optional)
- Optional delayed action ("DA") available to meet building code requirements (not available with backcheck)
- Extended spindles available to suit most applications
- Spindles are removable and can be changed to alter hanging application
- Offset models available for fire door assemblies up to three hours-prefix "F"
- "PH" model available to meet handicapped access requirements
- Can be adjusted in cement case up to 3/16"(5mm) forward, backward and sideways with positive locking

Floor Closers for Fire Door Assemblies

Offset hung floor closers are available for fire door assemblies up to three hours ("F" Series) or 20 minutes (-20 Series), are UL listed and handed. According to NFPA 80, labeled fire doors up to 60"(1524mm) in height shall be provided with two hinges or pivots and an additional hinge or pivot for each 30"(762mm). Specify quantity of intermediate pivots required. Product features and templating are identical to regular floor closers and intermediate pivots. PH closers should not be used on fire door assembly.

Specifications

Floor closers shall be Rixson® 5000 Series. Cement case shall not exceed 2"(51mm) in depth. Closers shall be available offset, center and independently hung with separate valves for closing speed and latch. Fully adjustable hydraulic backcheck. Closer shall be adjustable within the cement case up to ± 3/16"(5mm) forward, backward and sideways with positive locking. Spindles shall be removable and interchangeable in the field.

Contents

Page

Shallow Depth Floor Closers: General Information/Features/Specifications/Product Selection 58-59
51 Series Offset Hung Floor Closers 60-61
Q51 Series Offset Hung Floor Closers 62
QT51 Series Offset Hung Floor Closers 63
HM51 Series Offset Hung Floor Closers 64
Offset Hung Top Pivots 65
Intermediate or Side Jamb Offset Hung Pivots 66
50 Series Center Hung Floor Closers 67-68
Center Hung Top Pivots 69
53 Series Independently Hung Floor Closers 70
5400 Floor Closer/Coordinator 71
Accessories 72
Parts Drawings 73-78
Quick Reference of Options 79

1. Offset vs. Center Hung Application

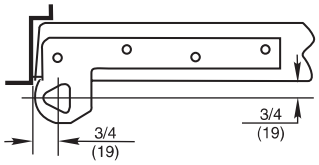

3/4" Offset
Pivot point located 3/4" from the heel edge of the door and 3/4" from face of door.

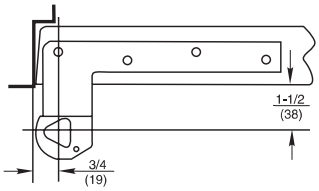

1-1/2" Offset
Pivot point located 3/4" from the heel edge of the door and 1-1/2" from face of door.

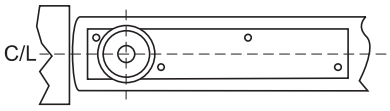

Center Hung
Pivot point centered in thickness of door. (Not for use on fire doors.)

2. Size of Door (width, height, thickness)

Door Material	Door Thickness				
	1-3/8"	**1-3/4"**	**2"**	**2-1/4"**	**2-1/2"**
	Weight-per-square-foot (in pounds):				
Aluminum		3-1/2			
Ash	4-1/2	5-1/4	6	6-3/4	7-1/2
Birch	3-3/4	4-1/2	5	5-3/4	6-1/4
Hollow Metal	6-1/2	6-1/2		6-1/2	
Oak	6	7	8	9	10
Pine	3	3-1/2	4	4-1/4	5
Lead Lining	**Lead Thickness**				
	1/64"	**1/16"**	**1/8"**	**1/4"**	
	Weight-per-square-foot (in pounds):				
	1	3-3/4	7-1/2	13-3/4	
Tempered Glass	**Glass Thickness**				
		3/8"	**1/2"**	**3/4"**	
	Weight-per-square-foot (in pounds):				
		5	8	9-3/4	
Marble/Granite Cladding	**Thickness**				
				*** 3/4"**	
	Weight-per-square-foot (in pounds):				
				10-1/2	

Example: A two-inch-thick birch door has a square foot weight of five pounds. If the door has standard dimensions of 3'(width) x 7'(height), this equals 21 square feet. So, 5 pounds x 21 square feet = 105 pounds total weight.

*Consult factory for sizes greater than 3/4"

3. Expected Frequency of Door Operation

Application	Daily	Yearly	
Large department store entrance	5,000	1,500,000	
Large office building entrance	4,000	1,200,000	
Theater entrance	1,000	450,000	
School entrance	1,250	225,000	**High**
School restroom door	1,250	225,000	
Store or bank entrance	500	150,000	
Office building restroom door	400	118,000	
School corridor door	80	15,000	
Office building corridor door	75	22,000	**Average**
Store restroom door	60	18,000	
Residential entrance door	40	15,000	
Residential restroom door	25	9,000	
Residential hallway door	10	3,600	**Low**
Residential closet door	6	2,200	

51 Series
Offset Hung Floor Closers

Model 5103/5104/5105 3/4" Offset

Application
Single Acting, Handed
Interior Doors
Weight to 250 lbs.*
Door Width up to 4'0"(1219mm)

ANSI/CO6041

* Door size & weight guidelines are determined using the appropriate number of intermediate pivots

Product Description & Features
- Interchangeable spindle adapters
- Separate and independent valves for closing speed and latch speed
- Allows 180° door swing (trim permitting)
- Optional backcheck - suffix "BC"
- Delayed action available-prefix "DA" (BC and DA not available together)
- Available non hold-open (NHO) or hold open at 90, 105 or 180° (requires door to swing approximately 5° beyond hold open point)
- Available in spring sizes 3 through 5:

Spring Size	Door Width
3	36"(914mm)
4	42"(1067mm)
5	48"(1219mm)

- Models available to meet ANSI A117.1 opening force requirements. Prefix "PH"

"PH" Spring Size	Door Width
2	36"(914mm)
3	42"(1067mm)

- Available with floor plate or threshold installation (floor plate shown)
- Available 1-1/2" offset, see page 61
- Cycolac cement case
- Vertical door adjustment
- Standard top pivot: #180 included
- Intermediate pivot recommended: M19 (order separately), see page 66
- Doors up to 90"(2286mm) in height should use one intermediate pivot. Each additional 30"(762mm) warrants another intermediate pivot

Technical Information
(Click here to view template)

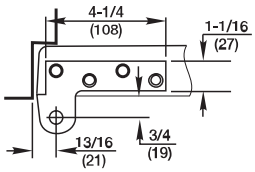

Frame stop required

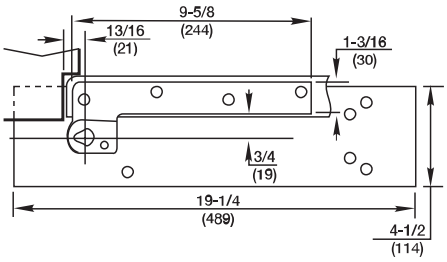

Model F5103/F5104/F5105

Application
For Fire Door Assemblies up to 3 Hours

ANSI/CO6041

Product Description & Features
Identical to Model 5103-5105 except:
- Available non hold-open only
- Standard top pivot: F180 (Ferrous) included
- Intermediate pivot: FM19 (Ferrous) must be used as required by codes (order separately), see page 66
- PH closers should not be used on fire door assemblies

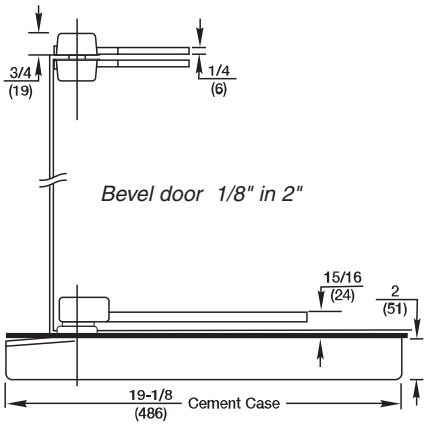

Model 5103-20/5104-20/5105-20

Application
For 20-Minute Fire Door Assemblies

ANSI/CO6041

Product Description & Features
Identical to Model 5103-5105 except:
- Available non hold-open only
- Standard top pivot: 180-20 (Bronze) included
- Intermediate pivot: M19-20 (Bronze) must be used as required by codes (order separately), see page 66

Extended spindles available in 1/2"(13mm) increments up to 2"(51mm)

Furnished with wood and machine screws

Model 5103/5104/5105 x 1-1/2" Offset

Application
Single Acting, Handed
Interior Doors
Weight to 175 lbs.*
Door Width up to 4'0"(1219mm)

ANSI/CO6041

* Door size & weight guidelines are determined using the appropriate number of intermediate pivots

Product Description & Features
- Available non hold-open or 90°, 105°, or 180° hold open
- Standard top pivot: 180 x 1-1/2" included
- Intermediate pivot required: M19 x 1-1/2"(order separately), see page 66
- Available in spring sizes 3 through 5:

Spring Size	Door Width
3	36"(914mm)
4	42"(1067mm)
5	48"(1219mm)

- Will swing to 180°, trim permitting
- Doors will swing 5° beyond hold open point
- Cycolac cement case
- Backcheck option available, suffix "BC" (not available on delayed action model)
- Delayed-action option available, prefix "DA" (not available on backcheck model)
- Available for floor plate or threshold installation (floor plate shown)
- Doors over 60" tall require the use of one intermediate pivot. Every additional 30" of door height warrants an additional intermediate pivot
- Model available to meet ANSI A117.1 requirements for physically handicapped access – prefix "PH"

"PH" Spring Size	Door Width
2	up to 42"(1067mm)
3	48"(1219mm)

- 1-1/2" offset (measured from centerline of pivot to face of door)

Technical Information
(Click here to view template)

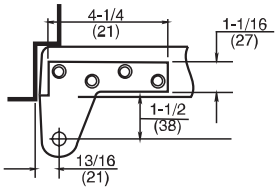

Frame stop required

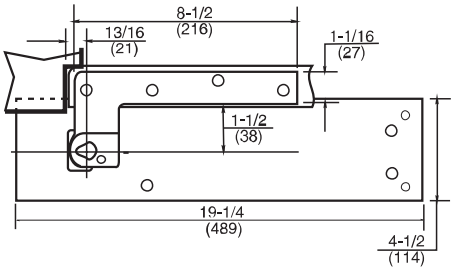

Model F5103/F5104/F5105 x 1 1/2"

Application
For Fire Door Assemblies up to 3 Hours

ANSI/CO6041

Product Description & Features
Identical to Model 5103-5105 x 1-1/2" except:
- Available non hold-open only
- Standard top pivot: F180 x 1-1/2"(Ferrous) included
- Intermediate pivot: FM19 x 1-1/2"(Ferrous) must be used as required by codes (order separately) see page 66
- PH closers should not be used on fire door assemblies

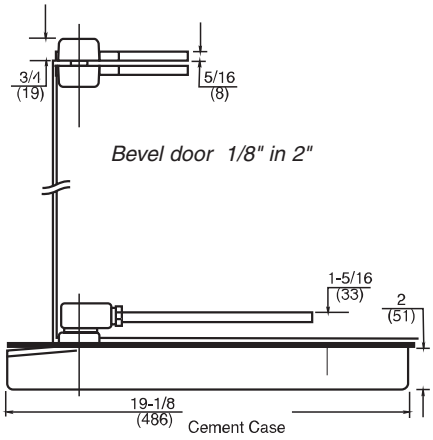

Model 5103-20/5104-20/5105-20 x 1 1/2"

Application
For 20-Minute Fire Door Assemblies

ANSI/CO6041

Product Description & Features
Identical to Model 5103-5105 x 1-1/2" except:
- Available non hold-open only
- Standard top pivot: 180-20 x 1-1/2"(Bronze) included
- Intermediate pivot: M19-20 x 1-1/2"(Bronze) must be used as required by codes (order separately) see page 66

Extended spindles available in 1/2"(13mm) increments up to 2"(51mm)

Furnished with wood and machine screws

Q51 Series
Offset Hung Floor Closers

Model Q5103/Q5104/Q5105 3/4" Offset

Application
Single Acting, Handed
Interior Doors
Weight to 250 lbs.
Door Width up to 4'0"(1219mm)

ANSI/CO6041

Product Description & Features
- Available non hold-open or 90° or 105° hold-open
- Standard top pivot: 180 included
- One M19 intermediate pivot included in closer package. An additional M19 pivot (see page 66) is required for doors over 195 lbs. and/or doors over 90". Intermediate pivot required for closer removal without door removal
- Available in spring sizes 3 through 5:

Spring Size	Door Width
3	36"(914mm)
4	42"(1067mm)
5	48"(1219mm)

- Will swing to 180°, trim permitting
- Doors will swing 5° beyond hold open point
- Cycolac cement case
- Backcheck option available, suffix "BC" (Not available on delayed action model)
- Delayed-action option available, prefix "DA" (Not available on backcheck model)
- Increase depth of cement case and removable arm allows closer to be removed without demounting door
- Arm is surface mounted with through bolts
- Door must be 1-3/4"(44mm) thick maximum and installed with 3/4"(19mm) offset pivot
- 3/4" offset only (measured from centerline of pivot to face of door)
- Floor plate installation only
- Doors over 60" tall require the use of one intermediate pivot. Every additional 30" of door height warrants an additional intermediate pivot
- Model available to meet ANSI A117.1 requirements for physically handicapped access-prefix "PH"

"PH" Spring Size	Door Width
2	up to 42"(1067mm)
3	48"(1219mm)

Technical Information
(Click here to view template)

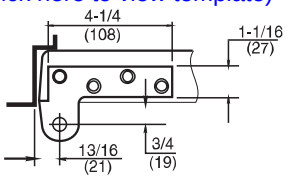

Frame stop required

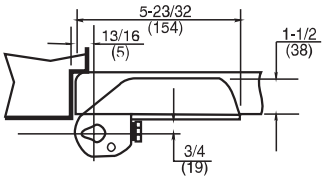

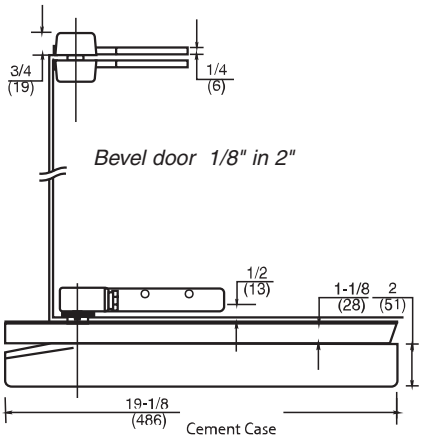

Model FQ5103/FQ5104/FQ5105

Application
For Fire Door Assemblies up to 3 Hours

ANSI/CO6041

Product Description & Features
Identical to Model Q5103-5105 except:
- Available non hold-open only
- Standard top pivot: F180 (Ferrous) included
- Intermediate pivot: FM19 (Ferrous) must be used as required by codes
- PH closers should not be used on fire door assemblies

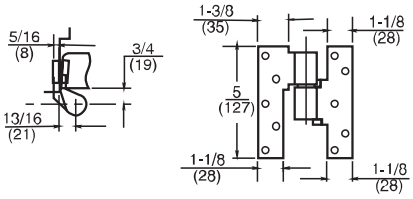

Extended spindles available in 1/2"(13mm) increments up to 2"(51mm)

Furnished with wood and machine screws

Model Q5103-20/Q5104-20/Q5105-20

Application
For 20-Minute Fire Door Assemblies

ANSI/CO6041

Product Description & Features
Identical to Model Q5103-5105 except:
- Available non hold-open only
- Standard top pivot: 180-20 (Bronze) included
- Intermediate pivot: M19-20 (Bronze) must be used as required by codes
- PH closers should not be used on fire door assemblies

Model QT5103/QT5104/QT5105 3/4" Offset

Application
Single Acting, Handed
3/4" Offset
Interior Doors
Weight to 250 lbs.
Door Width up to 4'0"(1219mm)

ANSI/CO6041

Product Description & Features
- Available non hold-open or 90° or 105° hold-open
- Standard top pivot: 180 included
- One M19 intermediate pivot included in closer package. An additional M19 pivot (see page 66) is required for doors over 195 lbs. and/or doors over 90". Intermediate pivot required for closer removal without door removal
- Available in spring sizes 3 through 5:

Spring Size	Door Width
3	36"(914mm)
4	42"(1067mm)
5	48"(1219mm)

- Will swing to 180°, trim permitting
- Doors will swing 5° beyond hold open point
- Cycolac cement case
- Backcheck option available, suffix "BC" (Not available on delayed-action model)
- Delayed-action option available, prefix "DA" (Not available on backcheck model)
- Increase depth of cement case and removable arm allows closer to be removed without demounting door
- Arm is surface mounted with through bolts
- Door must be 1-3/4"(44mm) thick maximum and installed with 3/4"(19mm) offset pivot
- Doors over 60" tall require the use of one intermediate pivot. Every additional 30" of door height warrants an additional intermediate pivot
- 3/4" offset only (measured from centerline of pivot to face of door)
- No floor plate furnished. Threshold installation only
- Model available to meet ANSI A117.1 requirements for physically handicapped access – prefix "PH"

"PH" Spring Size	Door Width
2	up to 42"(1067mm)
3	48"(1219mm)

Technical Information
(Click here to view template)

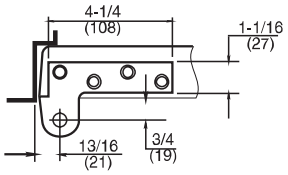

Frame stop required

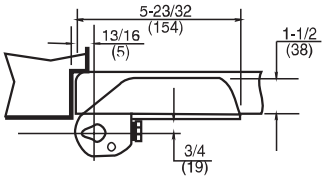

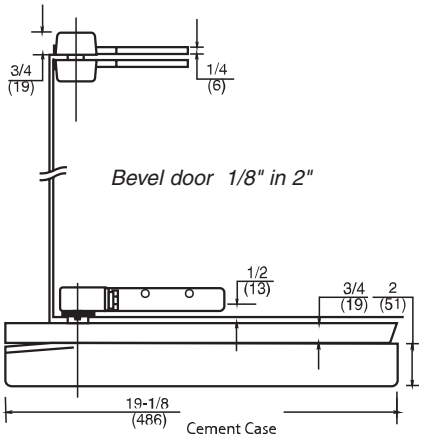

Bevel door 1/8" in 2"

Model FQT5103/FQT5104/FQT5105

Application
For Fire Door Assemblies up to 3 Hours

ANSI/CO6041

Product Description & Features
Identical to Model QT5103-5105 except:
- Available non hold-open only
- Standard top pivot: F180 (Ferrous) included
- Intermediate pivot: FM19 (Ferrous) must be used as required by codes
- PH closers should not be used on fire door assemblies

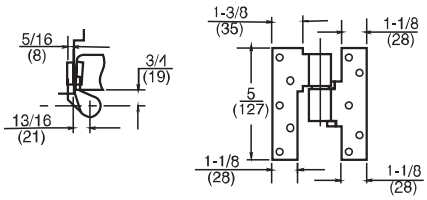

Model QT5103-20/QT5104-20/QT5105-20

Application
For 20-Minute Fire Door Assemblies

ANSI/CO6041

Product Description & Features
Identical to Model QT5103-5105 except:
- Available non hold-open only
- Standard top pivot: 180-20 (Bronze) included
- Intermediate pivot: M19-20 (Bronze) must be used as required by codes

Extended spindles available in 1/2"(13mm) increments up to 2"(51mm)

Furnished with wood and machine screws

HM51 Series
Offset Hung Floor Closers

Model HM5103/HM5104/HM5105 3/4" Offset

Application
Single Acting, Handed
Interior Doors
Weight to 250 lbs.
Door Width up to 4'0"(1219mm)

ANSI/CO6041

Product Description & Features
- Available non hold-open or 90° or 105° hold open
- Includes three ball-bearing bronze (4-1/2" x 4-1/2") 3/4" offset hinges
- Supplied with all machine screws and half wood screws
- Available in spring sizes 3 through 5:

Spring Size	Door Width
3	36"(914mm)
4	42"(1067mm)
5	48"(1219mm)

- For use on any door and frame prepared for standard weight 4-1/2"(114mm) hinges
- Surface mounted bottom arm allows for installation on stock hollow metal doors – no special prep required
- Designed for use on stock hollow metal doors and frames
- 1-3/4" doors only
- Cycolac cement case
- Will swing to 180°, trim permitting
- Available for floor plate or threshold installation (floor plate shown)
- Backcheck option available, suffix "BC" (Not available on delayed-action model)
- Delayed-action option available, prefix "DA" (Not available on backcheck model)
- Doors will swing 5° beyond hold open point
- 3/4" offset only (measured from centerline of pivot to face of door)
- Model available to meet ANSI A117.1 requirements for physically handicapped access – prefix "PH"

"PH" Spring Size	Door Width
2	up to 42"(1067mm)
3	48"(1219mm)

Technical Information
(Click here to view template)

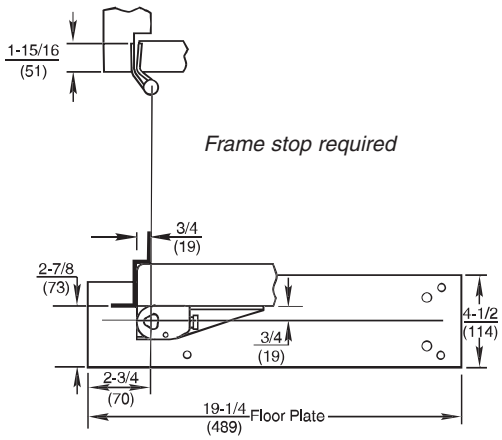

Bevel door 1/8" in 2"

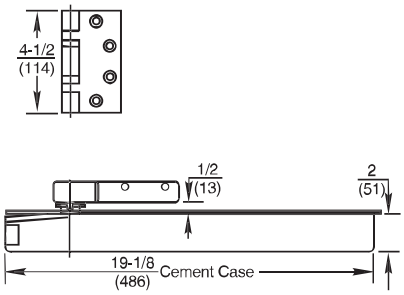

Extended spindles available in 1/2"(13mm) increments up to 2"(51mm)

Model FHM5103/FHM5104/FHM5105

Application
For Fire Door Assemblies up to 3 Hours

ANSI/CO6041

Product Description & Features
Identical to Model HM5103-5105 except:
- Available non hold-open only
- Steel hinges
- PH closers should not be used on fire door assemblies

Model 180

Application
Full Mortise
Non-handed

Product Description & Features
- Standard top pivot for the 51 3/4" offset floor closers
- Available for fire door assemblies (ferrous material)–specify F180
- For 20-minute label suffix –20
- Oil-impregnated sintered bronze bearing
- Non-ferrous base metal
- 3/4"(19mm) offset (measured from centerline of pivot to face of door)
- Available with longer than standard pivot pins. Increments are 1/4"(6mm), 1/2"(13mm), 3/4"(19mm) only
- Furnished with wood and machine screws

Technical Information

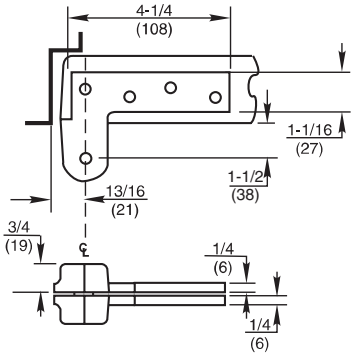

(Click here to view template)

Model 180 x 1-1/2"

Application
Full Mortise
Non-handed

Product Description & Features
- Standard top pivot for the 51 1-1/2" offset floor closer
- Available for fire door assemblies (ferrous material)–specify F180x1-1/2"
- For 20-minute label suffix –20
- Oil-impregnated sintered bronze bearing
- Non-ferrous base metal
- 1-1/2"(38mm) offset (measured from centerline of pivot to face of door)
- Available with longer than standard pivot pins. Increments are 1/4"(6mm), 1/2"(13mm), 3/4"(19mm) only
- Furnished with wood and machine screws

Technical Information

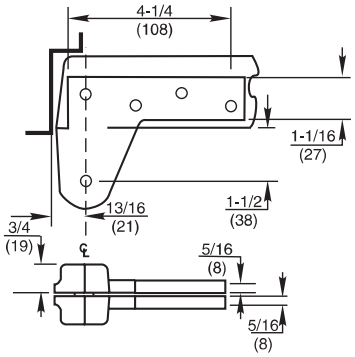

(Click here to view template)

Intermediate or Side Jamb Offset Hung Pivots

Model M19

Application
Full Mortise
Handed

ANSI NO: C07321

Product Description & Features
- Not load-bearing
- Maintains door alignment
- For 20-minute label suffix –20
- Non-ferrous base metal
- 3/4"(19mm) offset
- Available for fire door assemblies (ferrous material)–specify FM19
- On labeled fire door assemblies, NFPA80 requires an intermediate pivot for every additional 30"(762mm) (or fraction thereof) of door height over 60"(1524mm)
- Furnished with wood and machine screws

Technical Information

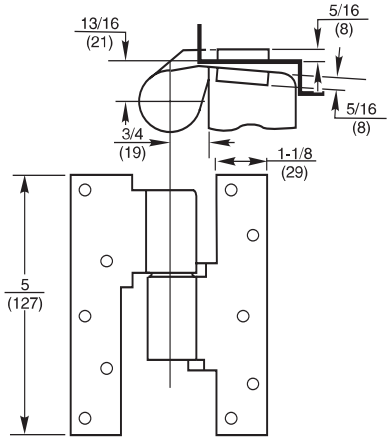

(Click here to view template)

Model M19 x 1-1/2"

Application
Full Mortise
Handed

ANSI NO: C07321

Product Description & Features
- Not load-bearing
- 1-1/2"(38mm) offset to clear decorative door or frame trim
- Maintains door alignment
- Non-ferrous base material
- Available for fire door assemblies (ferrous material)–specify FM19x1-1/2"
- For 20-minute label suffix –20
- On labeled fire door assemblies, NFPA80 requires an intermediate pivot for every additional 30"(762mm) (or fraction thereof) of door height over 60"(1524mm)
- Furnished with wood and machine screws

Technical Information

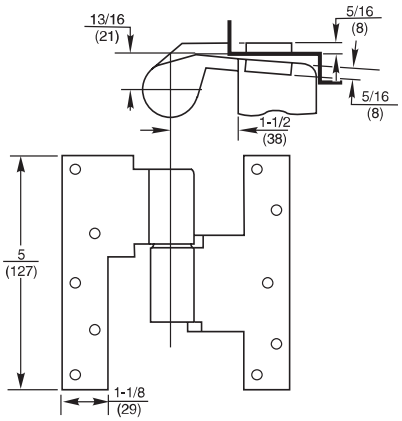

(Click here to view template)

Model F519

Application
Non-handed Pivot for
Pocket Door Installation

ANSI NO: A8911

Product Description & Features
- Full mortise, non-handed pivot for pocket door applications
- Heavy-duty steel pivot with ball bearings
- Allows doors to swing 90°
- Minimum three pocket pivots per door
- Doors over 80"(2032mm) in height require four pocket pivots. Every additional 30"(762mm) of door height warrants another pocket pivot
- UL listed for all labeled fire door assemblies up to and including 3 hours

Technical Information

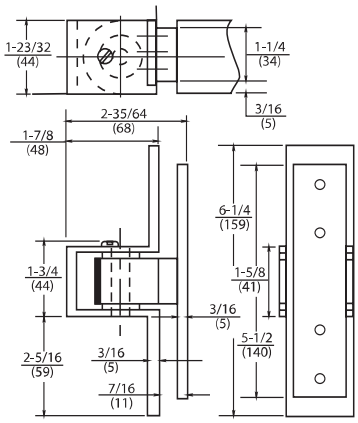

Note: Two Templates Required

(Click here to view template 1)
(Click here to view template 2)

Model 5013/5014/5015

Application
Single Acting, Handed
Interior Doors
Weight to 250 lbs.
Door Sizes up to 4'0"x 8'0"
(1219 x 2438mm)

ANSI/CO6021

Product Description & Features
- Available non hold-open or 90° or 105° hold open
- Standard top pivot: 340 included
- Available in spring sizes 3 through 5:

Spring Size	Door Width
3	36"(914mm)
4	42"(1067mm)
5	48"(1219mm)

- Will swing as far as frame trim will permit
- Backcheck option available, suffix "BC" (not available on delayed action model)
- Delayed action option available, prefix "DA" (not available on backcheck model)
- For wood door application, specify "W"
- Cycolac cement case
- Not allowed for use on labeled fire doors and frames
- Available for floor plate or threshold installation (floor plate shown)
- Model available to meet ANSI A117.1 requirements for physically handicapped access – prefix "PH"

"PH" Spring Size	Door Width
2	up to 42"(1067mm)
3	48"(1219mm)

- Applied stop required (see part number 60131 p. 34)

Technical Information
(Click here to view template)

Frame stop required on lock edge

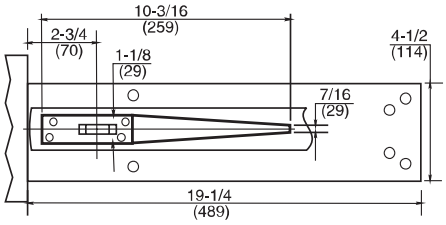

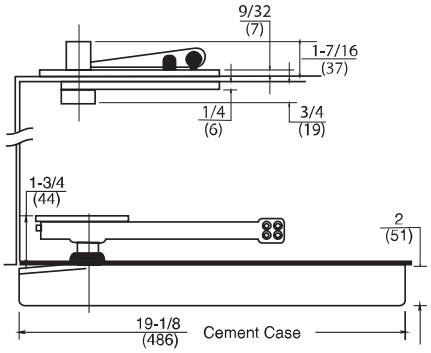

Extended spindles available in 1/2"(13mm) increments up to 2"(51mm)

Furnished with wood and machine screws

Model 5013/5014/5015 x 554 Arm

Application
Fully Concealed Arm

Product Description & Features
Identical to 50 Series except:
- Arm is designed to eliminate visible adjusting screws on face of door
- Arm bolt locks arm to closer spindle – adjustments made through heel of door
- Shims cannot be used with this model

Technical Information
(Click here to view template)

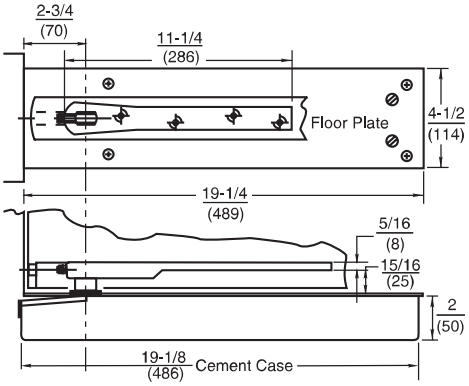

50 Series
Center Hung Floor Closers

Model 5023/5024/5025

Application
Double Acting, Non-handed
Interior Doors
Weight to 250 lbs.
Door Sizes up to 4'0" x 8'0"
(1219 x 2438mm)

ANSI/CO6011

Product Description & Features
- Available non hold-open or 90° or 105° hold open
- Standard top pivot: 340 included
- Available in spring sizes 3 through 5:

Spring Size	Door Width
3	36"(914mm)
4	42"(1067mm)
5	48"(1219mm)

- Will swing as far as frame trim will permit
- Backcheck option available, suffix “BC” (Not available on delayed action model)
- Delayed-action option available, prefix “DA” (Not available on backcheck model)
- For wood door application, specify “W”
- Cycolac cement case
- Not allowed for use on labeled fire doors and frames
- Available for floor plate or threshold installation (floor plate shown)
- Model available to meet ANSI A117.1 requirements for physically handicapped access – prefix “PH”

“PH” Spring Size	Door Width
2	up to 42"(1067mm)
3	48"(1219mm)

Technical Information

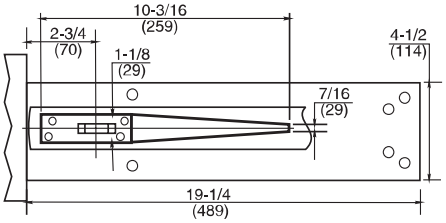

(Click here to view template)

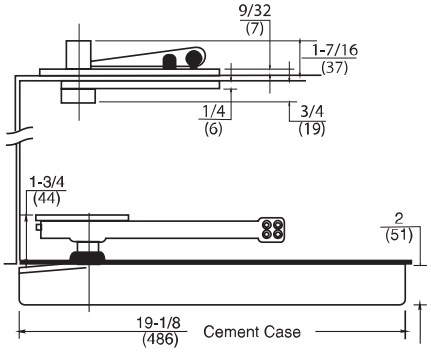

Extended spindles available in 1/2"(13mm) increments up to 2"(51mm)

Furnished with wood and machine screws

Model 5043/5044

Application
Single Acting, Handed
Interior Doors

Weight to 200 lbs
Door Sizes 3'6" x 8'0"

Product Description & Features
- Available non hold-open or hold open 90º or 105º
- Special walking beam top pivot for use with Rixson's patch fittings only.
- Available in spring sizes 3 and 4:

Spring Size	Door Width
3	36"(914mm)
4	42"(1067mm)

- Will swing as far as frame trim will permit
- Back check option should always be used with this product. Suffix BC
- Delayed Action cannot be used with BC option Suffix DA.
- Cycolac cement case
- Cannot be used on labeled doors
- Available for floor plate or threshold installation (floor plate shown)
- Model available to meet ANSI A117.1 requirements for physically handicapped access prefix PH

Spring Size	Door Width
2	42"(1067mm)

- Accommodates glass 3/8 to 1/2 thickness

Technical Information
(Click here to view template)

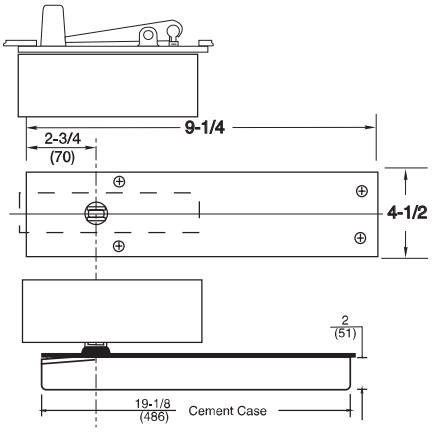

MODEL 340

Application
Fully Concealed
Non-handed

Product Description & Features

- Standard top pivot for 50 Series floor closers
- Walking beam-type pivot–1/2"(13mm) diameter pivot pin with 3/4"(19mm) engagement
- Oil-impregnated sintered bronze bearing
- Completely concealed when door is closed
- Available with longer than standard pivot pins. Increments are 1/4"(6mm), 1/2"(13mm), 3/4"(19mm) only
- Furnished with wood and machine screws

Technical Information
(Click here to view template)

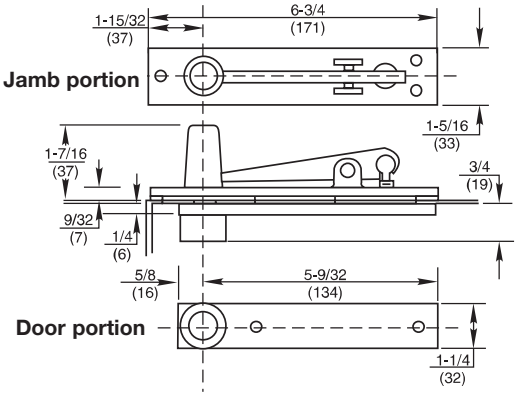

53 Series
Independently Hung Floor Closers

Model 5303/5304/5305

Application
Single Acting, Handed
Interior Doors
Door Width up to 4'0"(1219mm)

ANSI/CO6031

Product Description & Features
- Available non hold-open only
- Available in spring sizes 3 through 5:

Spring Size	Door Width
3	36"(914mm)
4	42"(1067mm)
5	48"(1219mm)

- Can be used with F519 pocket pivot where closer is located in the opening
- Includes closer, mortised rail, and rail block
- Closer does not support weight of door
- Door hanging means (by others) determines maximum door weight
- Cycolac cement case
- Backcheck option available, suffix “BC”
- Available for floor plate or threshold installation (floor plate shown)
- UL listed
- Not available “PH”, “DA”,”HO”

(Click here to view template)

Technical Information

Frame stop required
Door shown closed

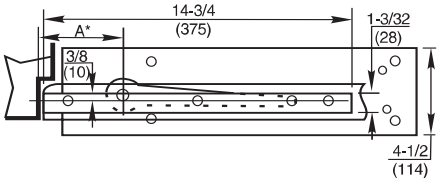

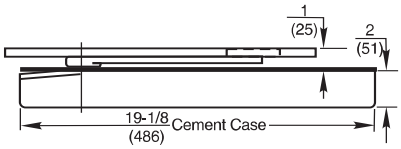

Extended spindles available in 1/2"(13mm) increments up to 2"(51mm)

**"A" determined by door hanging means*

Model 5313/5314/5315

Application
Single Acting, Handed
Interior Doors
Door Width up to 4'0"(1219mm)

ANSI/CO6041

Product Description & Features
Identical to Model 5303-5305 except:
- For use in 90° pocket door installations where closer is located in the pocket. Can only be used with F519 pocket pivots
- Specially milled spindle allows positive latch speed control
- UL listed
- Order F519 pocket pivot separately (see page 66)

(Click here to view template)

Technical Information

Door shown open

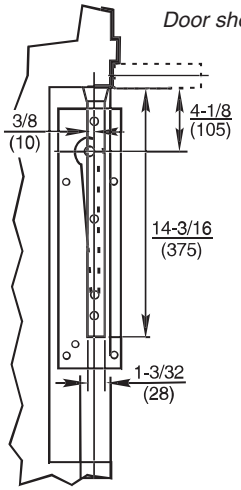

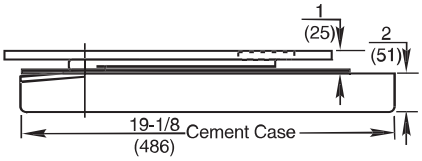

Model 5400 3/4" Offset

Application
Floor Closer/Coordinator
Interior Doors
Weight Limit 200 lbs.

General Information
- Recommended for medium traffic interior doors where a coordinating device is required and aesthetics are important
- Coordinating floor closers designed for fire door assemblies up to three hours ("F" Series)
- According to NFPA 80, labeled fire doors up to 60" in height shall be provided with two pivots and an additional pivot for each 30" of door height
- UL listed
- Handed

Product Description & Features
- Offset hung, single acting pair of closers for cross-corridor fire and smoke barrier doors
- Handed: must specify which leaf is to be active (5400 – Left hand active; 5410 – Right hand active)
- Closers are color-coded to identify active vs. inactive
- Available for floor plate or threshold installation (floor plate shown)
- Specifically designed to meet building code requirements for pairs of cross corridor fire door assemblies
- Integrated closing sequence control concealed within closers...eliminates the need for surface mounted door selectors
- Sequence controller prevents active leaf from closing before inactive leaf
- Cable linking closers are protected by steel tube... can be installed in early phases of construction
- Steel protective tube comes standard in 8'(203mm) lengths...can be trimmed in field to accommodate any opening width
- Shallow depth case [2-1/8"(54mm)] allows installation in thin slab floor construction
- Adjustable spring size (3-5) to accommodate doors up to 4'0"(1219mm)
- Available non hold-open only, door will swing to 180°, trim permitting
- Separate and independent valves for latch and closing speed ensures reliable control
- Fixed mechanical backcheck
- Extended spindles available to suit most any application
- Spindles are removable and can be exchanged in the field
- Uses standard top pivot and bottom arm, same as heavy-duty floor closer
- Centering adjustment for proper door alignment
- Can be adjusted in cement case up to ± 3/16"(5mm) in length and width, 1/4"(6mm) vertically
- Package includes:
  - two floor closers (one active, one inactive)
  - cable and steel protective tubing
  - two F180 top pivots
  - two bottom arms with finish caps
  - two floor plates
  - all necessary fasteners
- Intermediate pivot: FM19 must be used as required by codes (order separately), see page 66
- Recommended holder devices: 900 Series electromagnetic door releases
- Special layouts available to accommodate unusual applications
- Not available PH, DA, CWF, SC

(Click here to view template)

Model 5400 1-1/2" Offset

Application
Floor Closer/Coordinator
Interior Doors
Weight Limit 200 lbs.

Product Description & Features
Identical to Model 5400 3/4" Offset except:
- Standard top pivot: F180 1-1/2" offset included
- Intermediate pivot required: FM19 1-1/2" offset

(Click here to view template)

Accessories
Designed for Special Applications

185 Quickspotter

Application
This kit can be supplied for all floor closers. It comes with a spindle locator plate for offset and center-hung installations, two spotter straps with mounting screws and built in level.

Metal straps are attached to the cement case, and locator indicators provide proper placement of spindle. The level ensures accurate installation.

When ordering specify the closer model to be installed.

Cover Pans

51 Cover Pan shown

Application
To insure the aesthetics of a continuous floor line, a cover pan can be used in lieu of a closer floor plate. A cover pan (specify closer) is filled with flooring material (terrazzo, marble, tile, etc.) and is then placed on top of the floor closer. This allows maintenance to the floor closer if problems should arise.

When ordering a terrazzo pan, specify stainless steel or brass, exact closer being used, hand, and depth of pan. (7/8" is standard.) When ordering the floor closer deduct cost of floor plate, add for extended spindles, and add for cover pan. Closers that are “buried” under floor materials that do not have cover pans will not be covered by warranty.

MODEL 51

Right Hand Shown
3/4" Offset

180 Screw Kit
*107014 - *Machine (2 required)*
*107114 - *Wood (2 required)*

Arm Screw Kit
107044 Machine
107144 Wood

Floor Plate Screw Kit
*107004 - **

Cement Case Screw Kit
107075

*** specify finish*

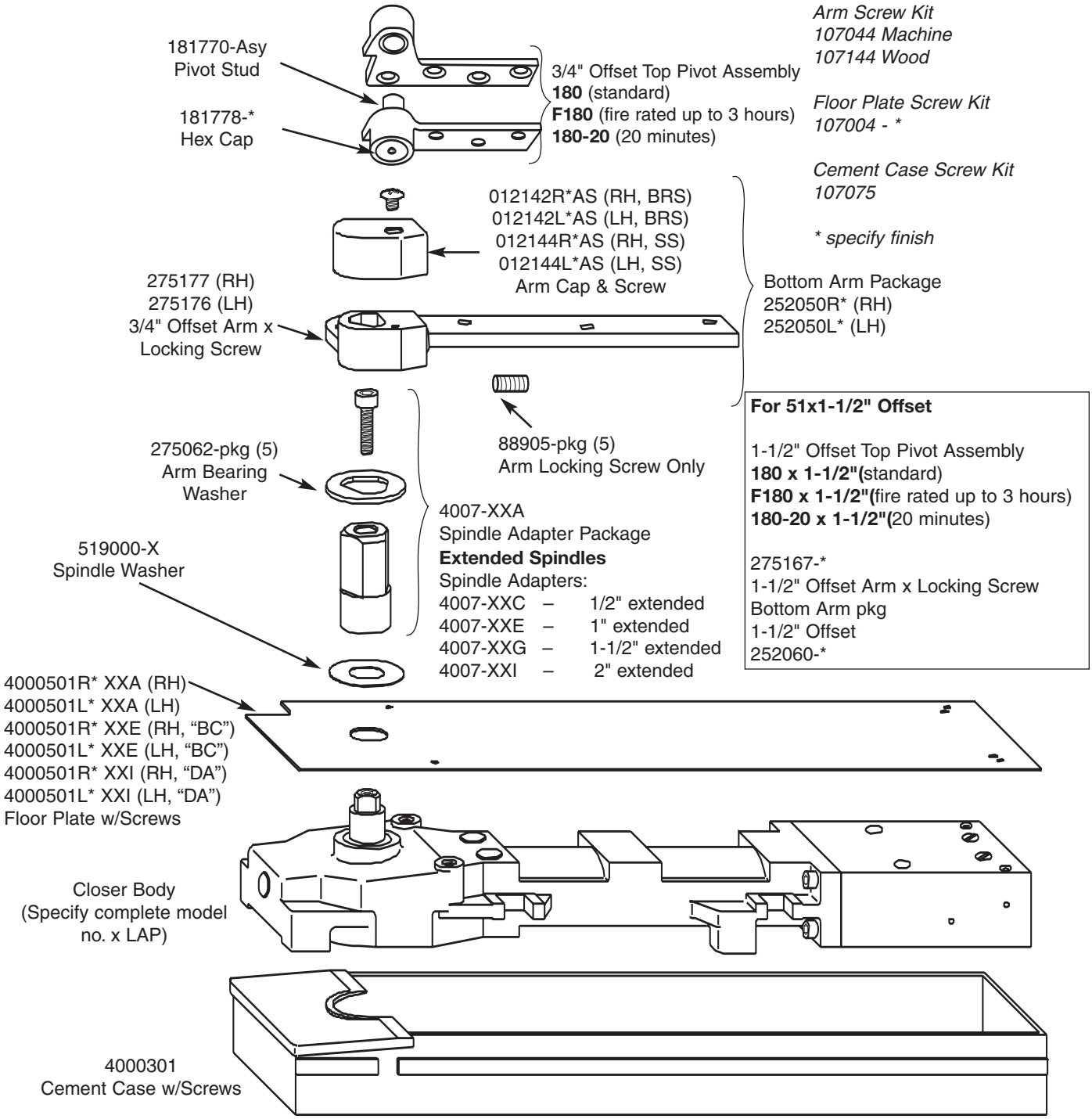

For 51x1-1/2" Offset

1-1/2" Offset Top Pivot Assembly
180 x 1-1/2"(standard)
F180 x 1-1/2"(fire rated up to 3 hours)
180-20 x 1-1/2"(20 minutes)

275167-*
1-1/2" Offset Arm x Locking Screw
Bottom Arm pkg
1-1/2" Offset
252060-*

MODEL Q51/QT51

Right Hand Shown
3/4" Offset

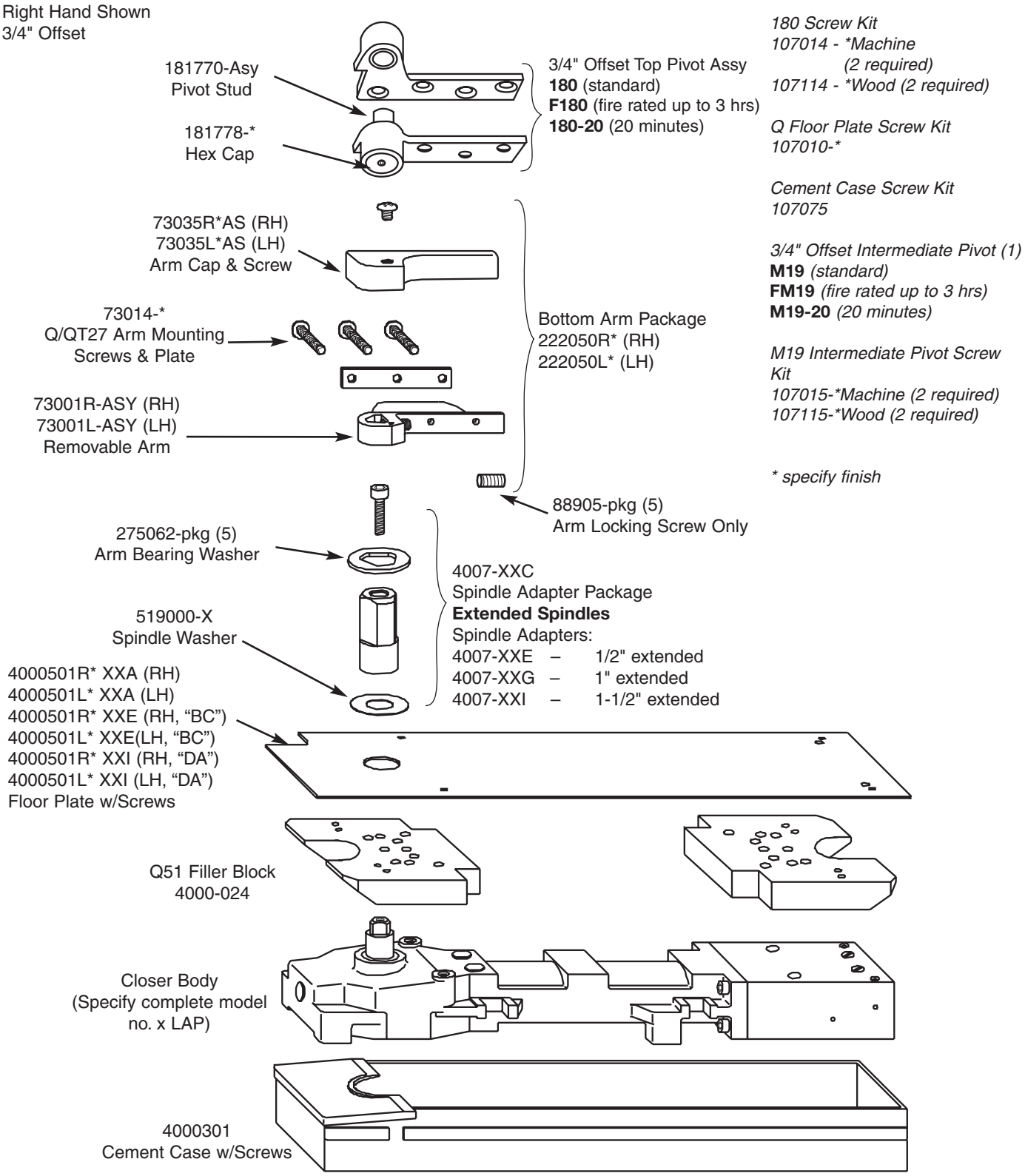

180 Screw Kit
*107014 - *Machine (2 required)*
*107114 - *Wood (2 required)*

Q Floor Plate Screw Kit
*107010-**

Cement Case Screw Kit
107075

3/4" Offset Intermediate Pivot (1)
M19 *(standard)*
FM19 *(fire rated up to 3 hrs)*
M19-20 *(20 minutes)*

M19 Intermediate Pivot Screw Kit
*107015-*Machine (2 required)*
*107115-*Wood (2 required)*

** specify finish*

MODEL HM51

Right Hand Shown
3/4" Offset Only

Arm Screw Kit
107044 - Machine
107144 - Wood

Floor Plate Screw Kit
*107004-**

Cement Case Screw Kit
107075

Special Offset Hinges (3)
*254545R*PK (RH)*
*254545L*PK (LH)*

*** specify finish**

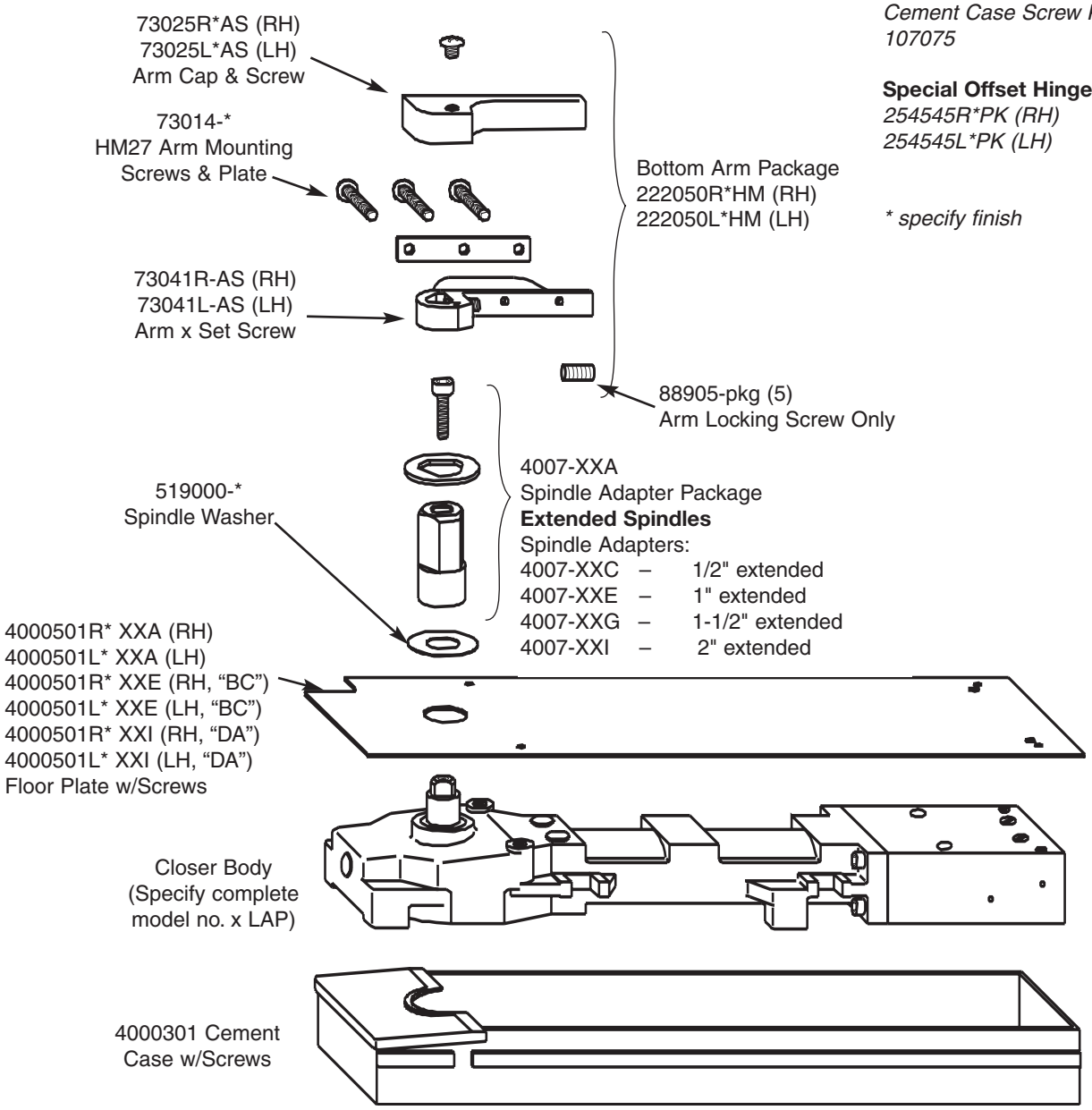

Parts Drawings

Model 50

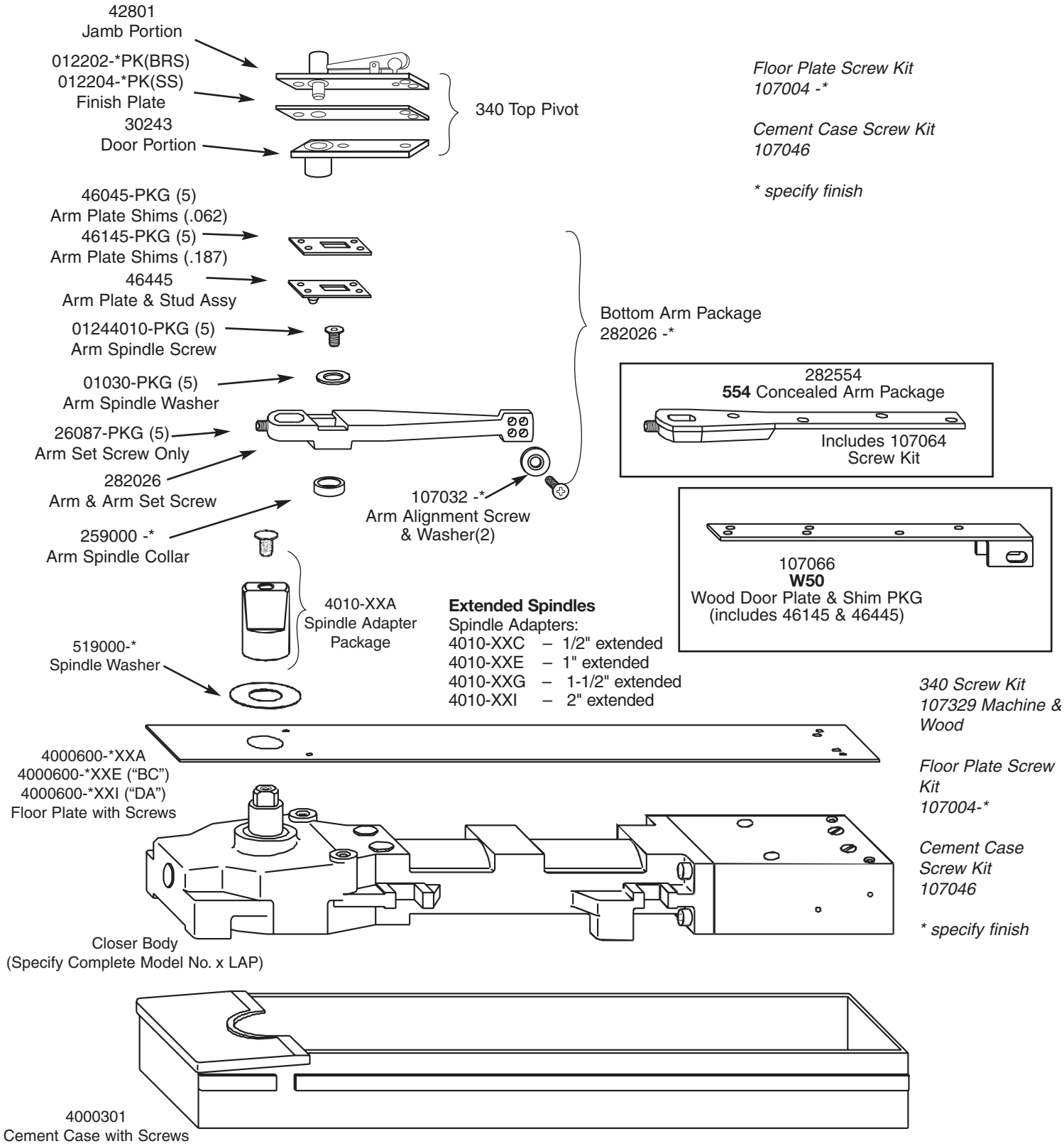

Model 53

*107004-**
Floor Plate Screw Kit

107075
Cement Case Screw Kit

** specify finish*

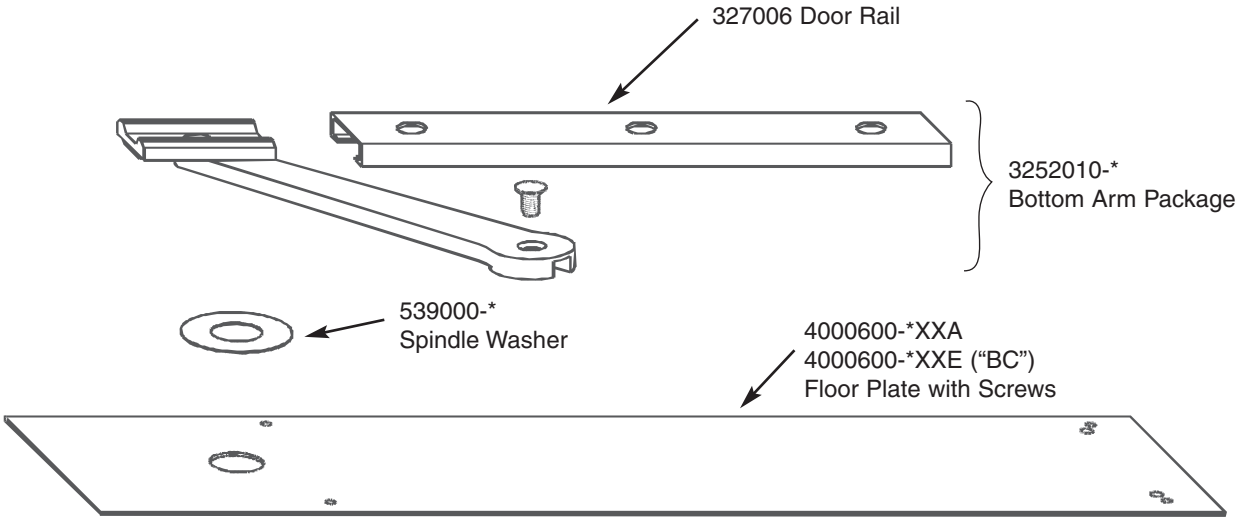

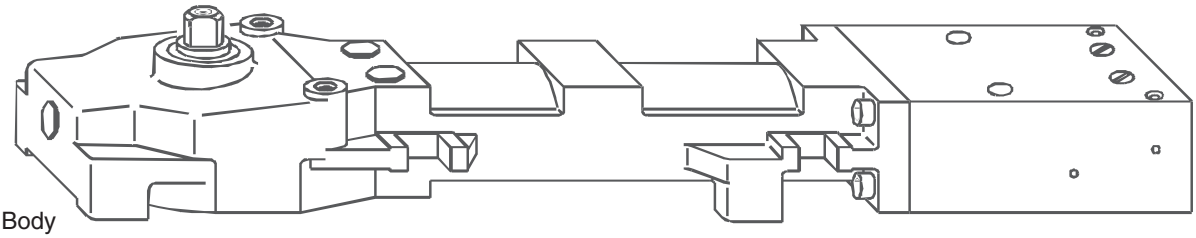

Closer Body
(Specify complete model no. x LAP)

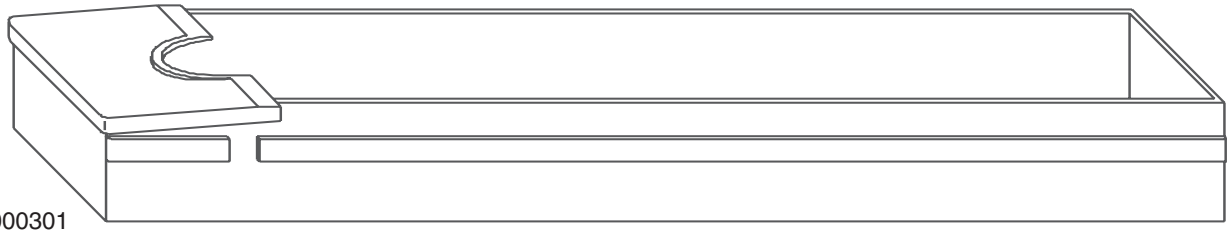

4000301
Cement Case w/Screws

MODEL 5400

F180 Screw Kit
107014- Machine*
107114- Wood*

Arm Screw Kit
107044 Machine
107144 Wood

Floor Plate Screw Kit
*107540-**

** specify finish*

Extended Spindle Adapters:

54130LXC (LH) – 1/2" extended
54130RXC (RH)
54130LXE (LH) – 1" extended
54130RXE (RH)
54130LXG (LH) – 1-1/2" extended
54130RXG (RH)
54130LXI (LH) – 2" extended
54130RXI (RH)

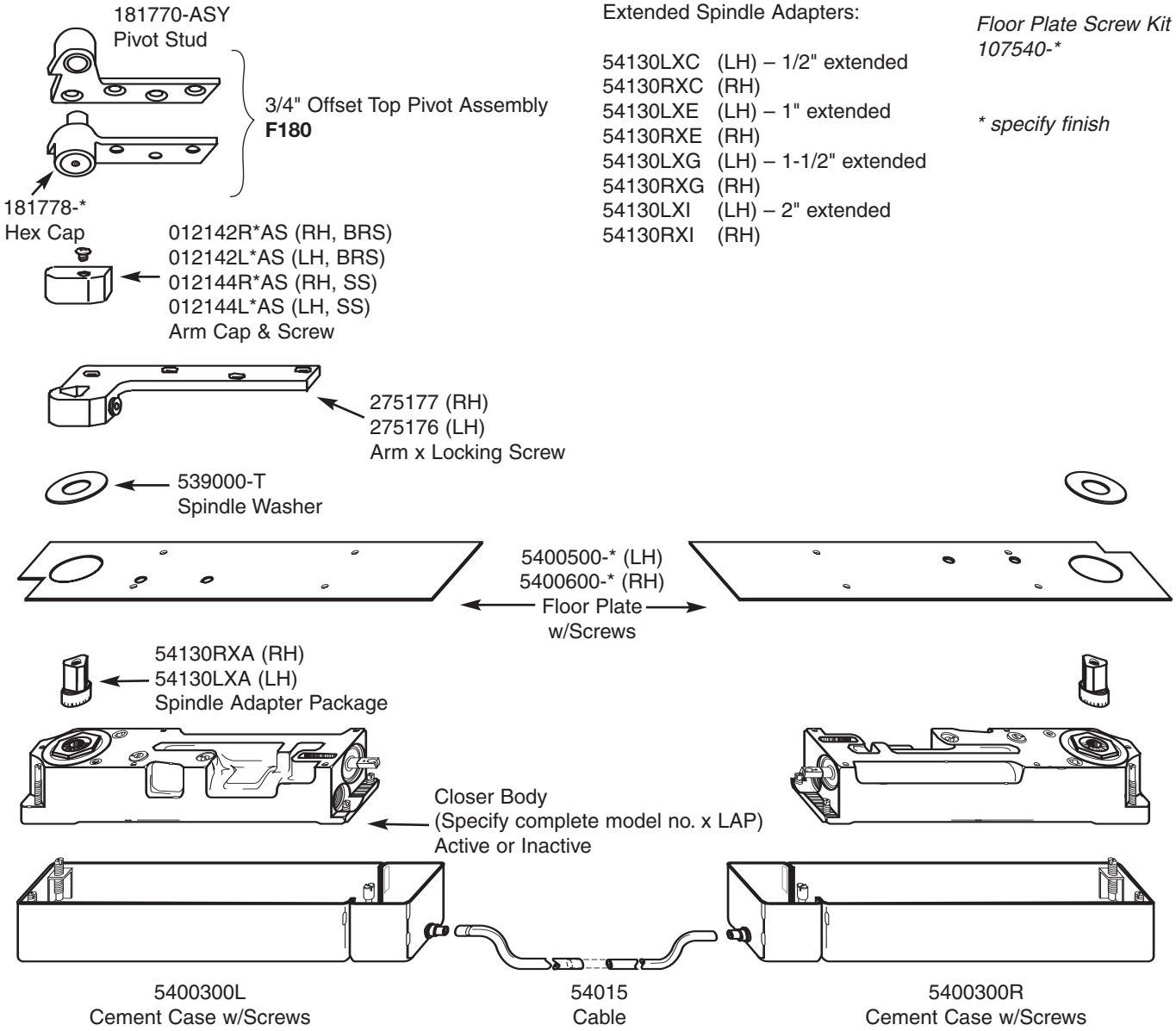

Quick Reference of Options

Reference

Prefix	Model	non hold-open or Hold Open	Suffix	Handed	Finish	Positive Dead Stop	Maximum Weight
F, PH, DA	**5100**	N, 90 A, 105 A, or 180 A	Ext Spdl, BC, -20	yes	yes	no	250
F, PH, DA	**5100 x 1-1/2" offset**	N, 90 A, 105 A, or 180 A	Ext Spdl, BC, -20	yes	yes	no	175
F, PH, DA	**Q/QT5100**	N, 90 A, or 105 A	Ext Spdl, BC, -20	yes	yes	no	250
PH, DA	**HM5100**	N, 90 A, or 105 A	Ext Spdl, BC	yes	yes	no	250
PH, DA	**5010**	N, 90 A, or 105 A	Ext Spdl, BC	yes	yes	no	250
PH, DA	**5020**	N, 90 A, or 105 A	Ext Spdl, BC	no	yes	no	250
PH,DA	**5040**	N, 90A or 105A	Ext Spdl, BC	yes	yes	no	200
	5300	N	Ext Spdl, BC	yes	yes	no	N/A
	5310	N	Ext Spdl, BC	yes	yes	no	N/A
	5400	N	Ext Spdl	yes	yes	no	200

Sample

F prefix	**5103** model	**N** hold open or non hold-open	**x 1/2" Ext Spdl** suffix	**LH** hand	**605** finish

Abbreviations

"F"	Fire-Rated Doors
-20	20-Minute Doors
A	Automatic Hold Open
N	non hold-open
DA	Delayed Action
PH	Physically Handicapped
BC	Backcheck

Finishes

U.S. Standard	Description	BHMA Code
US3	Bright brass, clear coated	605
US4	Satin brass, clear coated	606
US9	Bright bronze, clear coated	611
US10	Satin bronze, clear coated	612
US10B	Satin oxidized bronze, oil rubbed	613
US26	Bright chrome plated	625
US26D	Satin chrome plated	626
SA	Sprayed aluminum	689
SB	Sprayed bronze	690
SLB	Sprayed light bronze	691
SG	Sprayed gold	696