RIXSON®

Heavy-Duty Floor Closers

Complete Door Control

for Exterior and Interior Doors

Where Concealment

Is Desired

RIXSON®

General Information

Introduction

Floor closers provide the best mechanical means of controlling a door. They are designed to work with the laws of physics to provide long-lasting performance and reliability.

The weight of the door is supported entirely by the bottom arm, which is directly connected to the floor closer spindle. This hanging means provides several important mechanical advantages:

- Fasteners on the door and frame are in shear rather than tension (as with hinges) and are less likely to pull out over time. This creates less stress on the frame assembly, prevents door sagging and allows the door to swing with less resistance from friction.

- A door supported in this manner relies on the strength of the floor to carry the weight, not the frame. This allows extremely heavy doors to be hung in an opening and lets any weight door swing with more efficient geometry. Doors hung on floor closers also allow for vertical adjustment throughout the life of the building to compensate for settlement.

- The direct connection between the bottom arm and the floor closer spindle creates a tremendous increase in efficiency compared to surface closers with exposed arms. A floor closer produces an 85% closing force to opening force ratio where surface closers are approximately 60% efficient. A floor closer is far superior in closing a door when weather conditions or building stack pressure are factors. Rixson® Heavy-Duty Floor Closers take this efficiency concept to an even higher level by utilizing helical torsion springs.

In addition to these important mechanical and door control advantages, floor closers are fully concealed to maintain aesthetic design of the opening and to prevent vandalism or tampering by unauthorized individuals.

Contents

	Page
Heavy-Duty Floor Closers: General Information	**2**
How to Select Product	3
Options and Features	4
Specifications	5
20 Offset Hung Floor Closers	6
25 Offset Hung Floor Closers	7
L25 Offset Hung Floor Closers	8
27 3/4" Offset Hung Floor Closers	9
H27 Offset Hung Floor Closers	10
L27 Offset Hung Floor Closers	11
27 1-1/2" Offset Hung Floor Closers	12
Q27 Offset Hung Floor Closers	13
QT27 Offset Hung Floor Closers	14
HM27 Offset Hung Floor Closers	15
127/427 Offset & Independently Hung Floor Closers	16
327 Offset Hung Floor Closer	17
High Security Closers: General Information/Features/Specifications	**18**
FSEC25/FSEC27 High Security Offset Hung Floor Closers	19
Offset Hung Top Pivots	20-21
Intermediate or Side Jamb Offset Hung Pivots	22-23
21 and 26 Center Hung Floor Closers	24
28 Center Hung Floor Closers	25
328 Center Hung Floor Closer	26
428 Center Hung Floor Closer	26
H28 Center Hung Floor Closers	27
EH28 Center Hung Floor Closer	28
30/40 Center Hung Floor Closers	28
H40 Center Hung Floor Closers	29
Center Hung Top Pivots	30-31
Accessories	**32-34**
Parts Drawings	**35-54**
Quick Reference of Options	**55**

How to Select Product

1. Offset vs. Center Hung Application

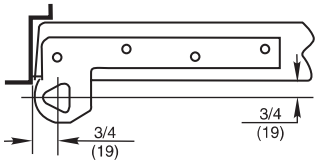

3/4" Offset
Pivot point located 3/4" from the heel edge of the door and 3/4" from face of door.

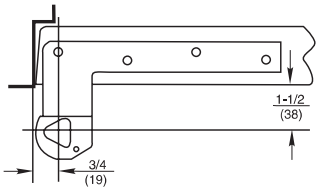

1-1/2" Offset
Pivot point located 3/4" from the heel edge of the door and 1-1/2" from face of door.

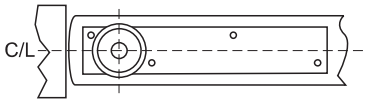

Center Hung
Pivot point centered in thickness of door. (Not for use on fire doors.)

2. Size of Door (width, height, thickness)

Door Material	Door Thickness				
	1-3/8"	**1-3/4"**	**2"**	**2-1/4"**	**2-1/2"**
	Weight-per-square-foot (in pounds):				
Aluminum		3-1/2			
Ash	4-1/2	5-1/4	6	6-3/4	7-1/2
Birch	3-3/4	4-1/2	5	5-3/4	6-1/4
Hollow Metal	6-1/2	6-1/2		6-1/2	
Oak	6	7	8	9	10
Pine	3	3-1/2	4	4-1/4	5
Lead Lining	**Lead Thickness**				
	1/64"	**1/16"**	**1/8"**	**1/4"**	
		Weight-per-square-foot (in pounds):			
	1	3-3/4	7-1/2	13-3/4	
Tempered Glass	**Glass Thickness**				
		3/8"	**1/2"**	**3/4"**	
	Weight-per-square-foot (in pounds):				
		5	8	9-3/4	
Marble/Granite Cladding	**Thickness**				
				*** 3/4"**	
	Weight-per-square-foot (in pounds):				
				10-1/2	

Example: A two-inch-thick birch door has a square foot weight of five pounds. If the door has standard dimensions of 3'(width) x 7'(height), this equals 21 square feet. So, 5 pounds x 21 square feet = 105 pounds total weight.

*Consult factory for sizes greater than 3/4"

3. Expected Frequency of Door Operation

Application	Daily	Yearly	
Large department store entrance	5,000	1,500,000	
Large office building entrance	4,000	1,200,000	
Theater entrance	1,000	365,000	
School entrance	1,250	225,000	High
School restroom door	1,250	225,000	
Store or bank entrance	500	150,000	
Office building restroom door	400	118,000	
School corridor door	80	15,000	
Office building corridor door	75	22,000	Average
Store restroom door	60	18,000	
Residential entrance door	40	15,000	
Residential restroom door	25	9,000	
Residential hallway door	10	3,600	Low
Residential closet door	6	2,200	

FEATURES

- Floor closers are fully concealed to maintain aesthetic design of the opening.
- Full weight of door is borne by floor closer, providing trouble-free operation and long life.
- Doors up to 1,500 pounds are accommodated, allowing standard and heavy doors in a building to be hung by the same means.
- Available offset or center hung to accommodate any installation.
- Vertical adjustment provides for field adjustment of the door if required.
- Specification of heavy panels on the door face with standard offset floor closer preparation available.
- Full floor-to-ceiling concealment is offered for center hung doors, providing almost unlimited design flexibility.
- Extended spindles available to accommodate any floor condition.
- Offset models available 3/4" or 1-1/2" offset.
- Offset models available for lead-lined doors.
- Offset models available for fire door assemblies up to three hours.
- Spring tension and closing speed are field adjustable.
- Built-in fully adjustable hydraulic backcheck standard on 27 and 28.
- Available in all standard architectural finishes.

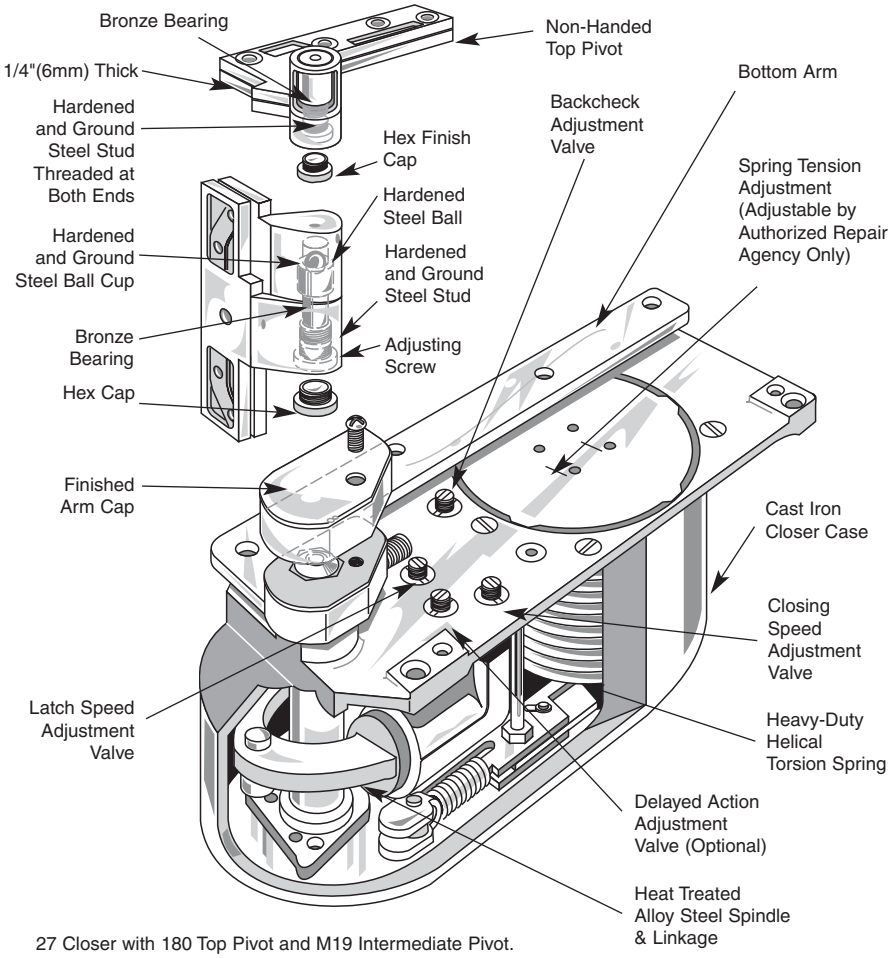

27 Closer with 180 Top Pivot and M19 Intermediate Pivot.

OPTIONS

Selective Hold-Open (SHO)
Factory-installed on 27 & 28 Series closers. Hold-open may be turned on/off.

Automatic Hold-Open (AHO)
Available on certain series closers with or without dead stop. Preset at factory for specific degree of hold-open. Degree of hold-open cannot be changed, nor can closer be made into non hold-open.

Delayed Action (DA)
Provided on barrier-free installations. Permits door to remain ajar (at 70°) for up to 30 seconds. Operates by separate valve and can be shut off if not needed. Not available on closers furnished with cold weather fluid, and not recommended for exterior applications because of weather factors. (27 & 28 series only)

Physically Handicapped (PH)
To comply with guidelines established in the American With Disabilities Act, lighter opening forces are met if closers are ordered with a PH prefix. If 5 pounds of opening on interior doors is needed, simply order PH. If 8.5# of force is needed, specify Prefix PH and suffix 8.5#.

Be advised that lower opening forces mean lower closer forces. PH products should not be ordered for exterior doors or fire rated openings. Fire/Lifesafety openings take precedence over the convenience of ADA. Securing a building is also a major concern and a lighter closer may not be strong enough to secure a latch bolt in a strike. Use care when specifying PH products.

Cold Weather Fluid (CWF)
Should be considered in installations where ground temperature is constantly below +15°F. May be used in temperatures as low as -35°F.

Sealed Closer (SC)
Used where water contact may occur. Provides gasketing and a cover plate that are epoxied around the case with the closer inside. Not available for replacement closers unless cement case is also replaced.

Fire Rated
(F) Used on labeled fire door requiring steel base pivot. PH with 3 pounds of opening force may not be used on fire doors.

(- 20), Smoke Doors, brass base pivots

Combination Floor Closer-Door Holder Packages

Absolute door control - top and bottom - with a single packaged system. For high traffic volume, entrance and exit conditions. Single source responsibility saves money, simplifies specification, and eliminates coordination of templates.

Combinations Available: Dependable Rixson® 25, 27, 28 and 30-40 Series closers – teamed with rugged Checkmate® No. 1, 8 or 9 Series overhead holders – eliminate door and frame damage caused by racking and twisting.

The combination 27/28 closer-holder package cushions and dead stops the door, top and bottom, at 85°, 90°, 95° or 105°. The hold-open function is controlled by the holder and will be approximately 5° to 7° less than dead stop desired. The 27, 28, 30 and 40 closer-holder combination is coordinated to dead stop at the same degree. The impact of opening is absorbed by the shock spring in the holder at the top, and the hydraulic backcheck and dead stop in the floor closer at the bottom of the door.

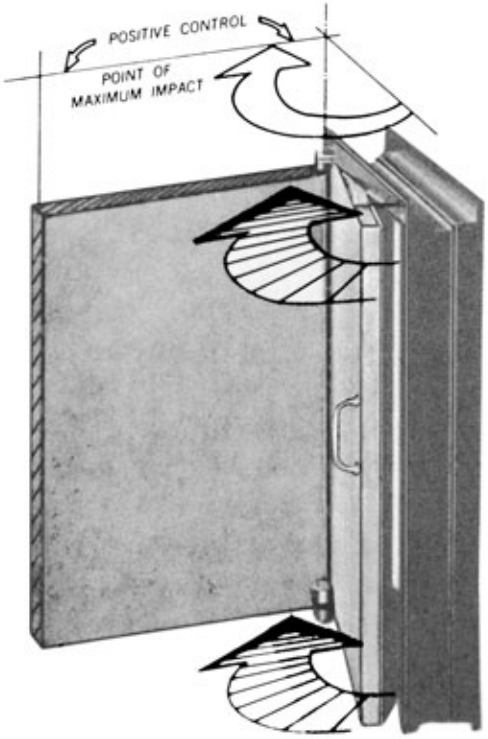

Suggested Specification

Floor Closer shall be Model 27 (offset hung) or Model 28 (center hung) and shall be available for labeled fire doors and lead-lined doors (offset hung) as well as regular doors. Closer to have separate and independent and adjustable valves for closing speed, latch speed and backcheck. Independent delayed action option to be available. Model to be available for physically handicapped access as required by building codes. Closer shall be available non hold-open, or selective hold-open at 85, 90, 95 or 105 degrees. Closer to have built-in dead stop to prevent door from swinging beyond required opening degree.

Floor Closers for Fire Door Assemblies

Offset hung floor closers are available for fire door assemblies up to three hours (“F” Series) or 20 minute (-20 Series), are UL listed and handed. According to NFPA 80, labeled fire doors up to 60" in height shall be provided with two hinges or pivots and an additional hinge or pivot for each 30" of door height. The distance between pivots may exceed 30". Specify quantity of intermediate pivots required. Product features and templating are identical to regular floor closers and intermediate pivots. Do not use PH closers on fire door assemblies.

RIXSON®

Model 20
Offset Hung Floor Closers

Model 20 3/4" Offset

Application
Single Acting, Handed
Interior Doors
Weight to 200 lbs.*
Door Width up to 3'0"

ANSI/C06042

Product Description & Features
- Allows 180° door swing (trim permitting)
- Adjustable closing speed
- Built-in hydraulic backcheck cushions opening from 140° to 180°
- Available non hold-open (NHO only)
- Models available to meet ANSI A117.1 opening force requirements. Prefix "PH"
- Delayed action not available
- Cast iron cement case
- Vertical door adjustment
- Standard top pivot: #180 included
- Intermediate pivot required: M19 (order separately), see page 22
- Doors up to 90"(2286mm) in height should use one intermediate pivot. Each additional 30"(762mm) warrants another intermediate pivot

Technical Information
(Click here to view template)

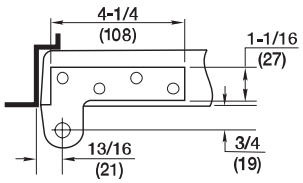

Frame stop required

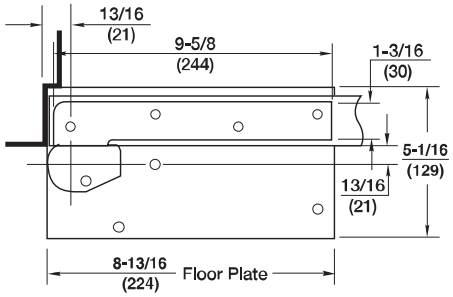

* Door size & weight guidelines are determined using the appropriate number of intermediate pivots

Model F20 3/4" Offset

Application
For Fire Door Assemblies up to 3 Hours

ANSI/C06052

Product Description & Features
Identical to Model 20 except:
- Standard Top Pivot: F180 (Ferrous) included
- Intermediate Pivot: FM19 (Ferrous) must be used as required by UL (order separately), see page 22

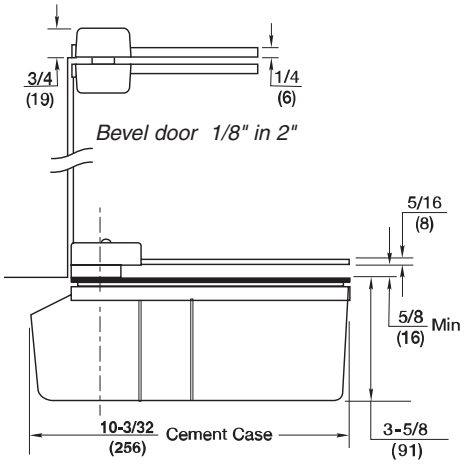

Extended spindles available in 1/2"(13mm) increments up to 2"(51mm)

Furnished with wood and machine screws

Model 25
Offset Hung Floor Closers

Model 25 3/4" Offset

Application
Single Acting, Handed
Exterior or Interior Doors
Weight to 350 lbs.*
Door Width up to 4'0"

ANSI/C06042

Product Description & Features
- Allows 180° door swing (trim permitting)
- Adjustable closing speed
- Built-in hydraulic backcheck cushions opening from 140° to 180°
- Available non hold-open (NHO) or 180° automatic hold-open (AHO)
- Models available to meet ANSI A117.1 opening force requirements. Prefix "PH"
- Delayed action not available
- Cold weather fluid available-specify "CWF"
- Sealed closer available-specify "SC"
- Available with floor plate or threshold installation (floor plate shown)
- Available 1-1/2" offset
- Cycolac cement case
- Vertical door adjustment
- Standard top pivot: #180 included
- Intermediate pivot required: M19 (order separately), see page 22
- Doors up to 90"(2286mm) in height should use one intermediate pivot. Each additional 30"(762mm) warrants another intermediate pivot

Technical Information
(Click here to view template)

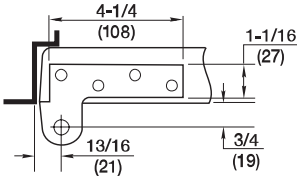

Frame stop required

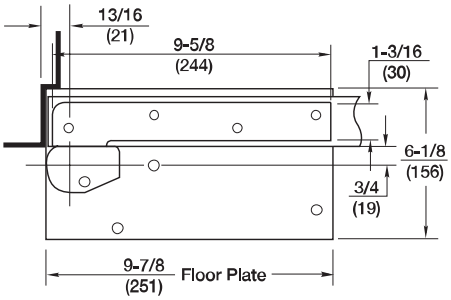

* Door size & weight guidelines are determined using the appropriate number of intermediate pivots

Model F25 3/4" Offset

Application
For Fire Door Assemblies up to 3 Hours

ANSI/C06052

Product Description & Features
Identical to Model 25 except:
- Available non hold-open only
- Standard Top Pivot: F180 (Ferrous) included
- Intermediate Pivot: FM19 (Ferrous) must be used as required by UL (order separately), see page 22

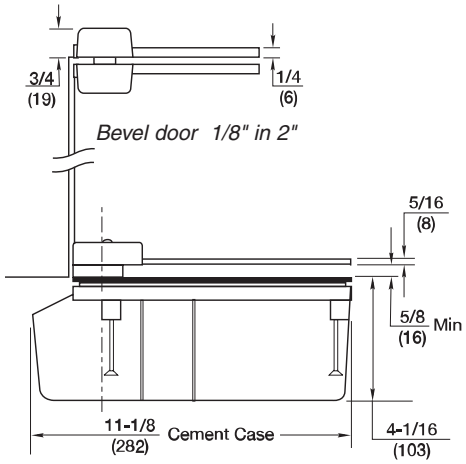

Model 25-20 3/4" Offset

Application
For 20-Minute Fire Door Assemblies

ANSI/C06042

Product Description & Features
Identical to Model 25 except:
- Available non hold-open only
- Standard Top Pivot: 180-20 (Bronze) included
- Intermediate Pivot: M19-20 (Bronze) must be used as required by UL (order separately), see page 22

Extended spindles available in 1/2"(13mm) increments up to 2"(51mm)

Furnished with wood and machine screws

RIXSON®

Model L25
Offset Hung Floor Closers

Model L25 3/4" Offset

Application
Single Acting, Handed
Exterior or Interior
Lead-Lined/Heavy Doors
Weight to 1250 lbs.*
Door Width up to 4'0"(1219mm)

ANSI/C06072

Product Description & Features
- Allows 180° door swing (trim permitting)
- Heavy-duty bottom arm and top pivot with screw holes designed to straddle lead lining
- Available for the following door thicknesses: 1-3/4"(44mm), 2"(51mm), 2-1/4"(57mm), 2-1/2"(63mm), or 3"(76mm)
- Thrust bearing for greater load capacity
- Cast iron cement case
- Adjustable closing speed
- Built-in hydraulic backcheck cushions opening from 140° to 180°
- Available non hold-open only
- Models available to meet ANSI A117.1 opening force requirements. Prefix "PH"
- Delayed action not available
- Cold weather fluid available-specify "CWF"
- Sealed closer available-specify "SC"
- Available with floor plate or threshold installation (floor plate shown)
- Vertical door adjustment
- Standard top pivot: # L180 included
- Intermediate pivot required: ML19 (order separately), see page 23
- Doors up to 90"(2286mm) in height should use one intermediate pivot. Each additional 30"(762mm) warrants another intermediate pivot

Technical Information
(Click here to view template)

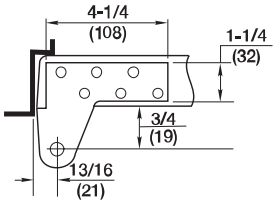

Frame stop required

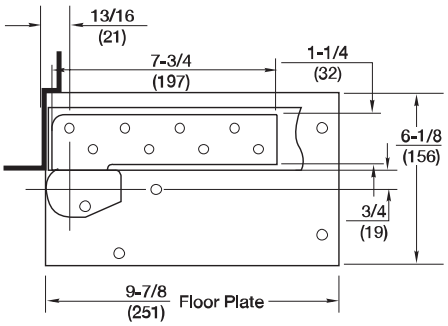

* Door size & weight guidelines are determined using the appropriate number of intermediate pivots

Model FL25 3/4" Offset

Application
For Fire Door Assemblies up to 3 Hours

ANSI/C06072

Product Description & Features
Identical to Model L25 except:
- Standard Top Pivot: FL180 (Ferrous) included
- Intermediate Pivot: FML19 (Ferrous) must be used as required by UL (order separately), see page 23
- For 1-3/4"(44mm) thickness only

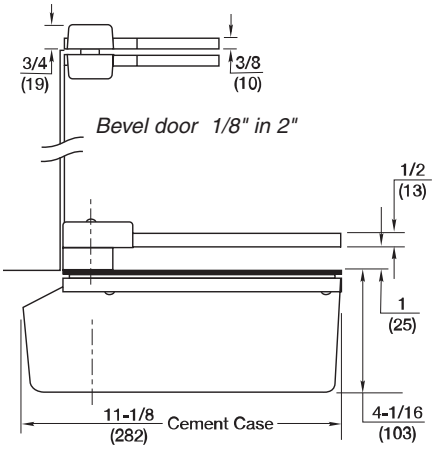

Model L25-20 3/4" Offset

Application
For 20-Minute Fire Door Assemblies

ANSI/C06072

Product Description & Features
Identical to Model L25 except:
- Standard Top Pivot: L180-20 (Bronze) included
- Intermediate Pivot: ML19-20 (Bronze) must be used as required by UL (order separately), see page 23

Extended spindles available in 1/2"(13mm) increments up to 2"(51mm)

Furnished with wood and machine screws

1-3/4" door thickness shown

Model 27
Offset Hung Floor Closers

Model 27 3/4" Offset

Application
Single Acting, Handed
Exterior or Interior Doors
Weight to 450 lbs.*
Door Width up to 4'0"(1219mm)

ANSI/C06041

* Door size & weight guidelines are determined using the appropriate number of intermediate pivots

Product Description & Features
- Built-in positive dead stop prevents door from swinging beyond the desired opening degree (specify 85, 90, 95 or 105°)
- Separate and independent valves for closing speed, latch speed and backcheck
- Delayed action available-prefix "DA"
- Available non hold-open (NHO), automatic hold open (AHO) or selective hold open (SHO) at same degree as dead stop
- Models available to meet ANSI A117.1 opening force requirements. Prefix "PH"
- Cold weather fluid available-specify "CWF" (not available for closers with "DA")
- Sealed closer available-specify "SC"
- Available with floor plate or threshold installation (floor plate shown)
- Available 1-1/2" offset, see page 12
- Cycolac cement case
- Vertical door adjustment
- Standard top pivot: #180 included
- Intermediate pivot required: M19 (order separately), see page 22
- Doors up to 90"(2286mm) in height should use one intermediate pivot. Each additional 30"(762mm) warrants another intermediate pivot (order separately), see page 22

Technical Information
(Click here to view template)

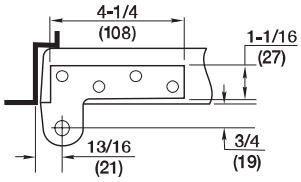

Frame stop required

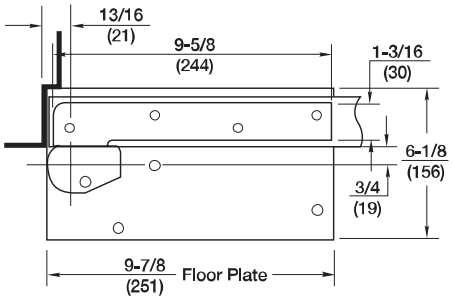

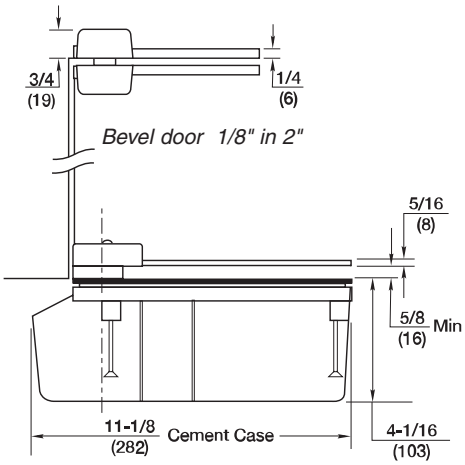

Model F27 3/4" Offset

Application
For Fire Door Assemblies up to 3 Hours

ANSI/C06051

Product Description & Features
Identical to Model 27 except:
- Available non hold-open only
- Standard Top Pivot: F180 (Ferrous) included
- Intermediate Pivot: FM19 (Ferrous) must be used as required by UL (order separately), see page 22

Model 27-20 3/4" Offset

Application
For 20-Minute Fire Door Assemblies

ANSI/C06041

Product Description & Features
Identical to Model 27 except:
- Available non hold-open only
- Standard Top Pivot: 180-20 (Bronze) included
- Intermediate Pivot: M19-20 (Bronze) must be used as required by UL (order separately), see page 22

Extended spindles available in 1/2"(13mm) increments up to 2"(51mm)

Furnished with wood and machine screws

RIXSON®

Model H27
Offset Hung Floor Closers

Model H27 3/4" Offset

Application
Single Acting, Handed
Exterior or Interior Doors
Heavy Doors, Medium Traffic
Weight to 800 lbs.*
Door Width up to 4'0"(1219mm)

ANSI/C06041

Product Description & Features
- Heavy-duty bottom arm and top pivot
- Built-in positive dead stop prevents door from swinging beyond the desired opening degree (specify 85, 90, 95 or 105°)
- Separate and independent valves for closing speed, latch speed and backcheck
- Delayed action available-prefix "DA"
- Available non hold-open (NHO), automatic hold open (AHO) or selective hold open (SHO) at same degree as dead stop
- Models available to meet ANSI A117.1 opening force requirements. Prefix "PH"
- Cold weather fluid available-specify "CWF" (not available for closers with "DA")
- Sealed closer available-specify "SC"
- Available with floor plate or threshold installation (floor plate shown)
- Cast iron cement case
- Vertical door adjustment
- Standard top pivot: H180 included
- Intermediate pivot required: M190 (order separately), see page 22
- Doors up to 90"(2286mm) in height should use one intermediate pivot. Each additional 30"(762mm) warrants another intermediate pivot (order separately), see page 22

Technical Information
(Click here to view template)

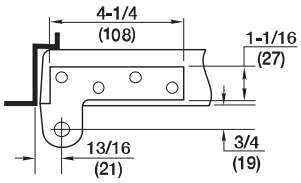

Frame stop required

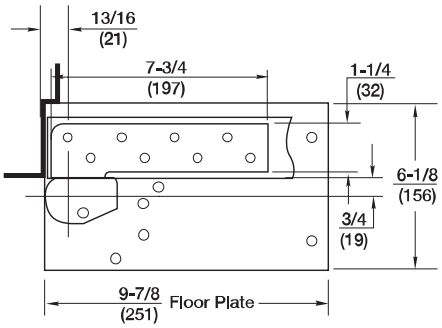

* Door size & weight guidelines are determined using the appropriate number of intermediate pivots

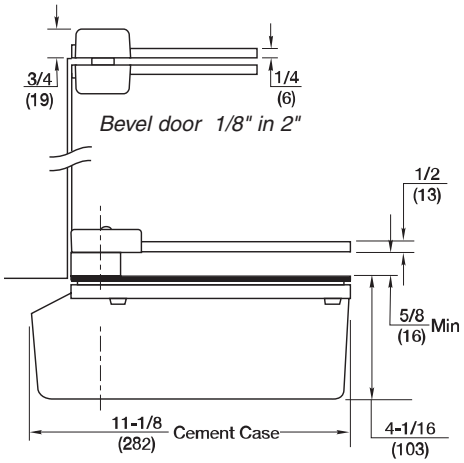

Extended spindles available in 1/2"(13mm) increments up to 2"(51mm)

Furnished with wood and machine screws

Model FH27 3/4" Offset

Application
For Fire Door Assemblies up to 3 Hours

ANSI/C06051

Product Description & Features
Identical to Model H27 except:
- Available non hold-open only
- Standard Top Pivot: FH180 (Ferrous) included
- Intermediate Pivot: FM19 (Ferrous) must be used as required by UL (order separately), see page 22
- 1-3/4" doors only (44mm).

Model H27-20 3/4" Offset

Application
For 20-Minute Fire Door Assemblies

ANSI/CO6041

Product Description & Features
Identical to Model H27 except:
- Available non hold-open only
- Standard Top Pivot: H180-20 (Bronze) included
- Intermediate Pivot: M190-20 (Bronze) must be used as required by UL (order separately), see page 22

Model L27
Offset Hung Floor Closers

Model L27 3/4" Offset

Application
Single Acting, Handed
Exterior or Interior Doors
Lead-Lined/Heavy/High Traffic Doors
Weight to 1500 lbs.*
Door Width up to 4'0"(1219mm)

ANSI/C06071

* Door size & weight guidelines are determined using the appropriate number of intermediate pivots

Product Description & Features
- Heavy-duty bottom arm and top pivot with screw holes designed to straddle lead lining
- Available for the following door thicknesses: 1-3/4"(44mm), 2"(51mm), 2-1/4"(57mm), 2-1/2"(63mm) or 3"(76mm)
- Thrust bearing for greater load capacity
- Built-in positive dead stop prevents door from swinging beyond the desired opening degree (specify 85, 90, 95 or 105°)
- Separate and independent valves for closing speed, latch speed and backcheck
- Delayed action available-prefix “DA”
- Available non hold-open (NHO), automatic hold open (AHO) or selective hold open (SHO) at same degree as dead stop
- Models available to meet ANSI A117.1 opening force requirements. Prefix “PH”
- Cold weather fluid available-specify “CWF” (not available for closers with “DA”)
- Sealed closer available-specify “SC”
- Available with floor plate or threshold installation (floor plate shown)
- Cast iron cement case
- Vertical door adjustment
- Standard top pivot: L180 included
- Intermediate pivot required: ML19 (order separately), see page 23
- Doors up to 90"(2286mm) in height should use one intermediate pivot. Each additional 30"(762mm) warrants another intermediate pivot

Technical Information
(Click here to view template)

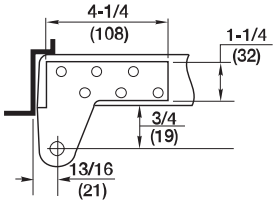

Frame stop required

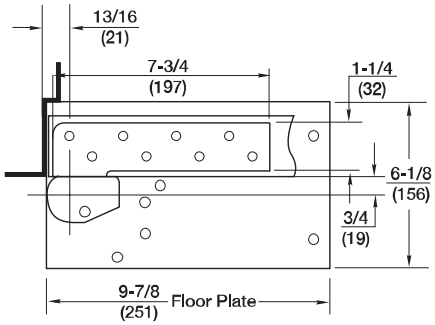

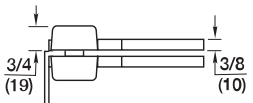

Bevel door 1/8" in 2"

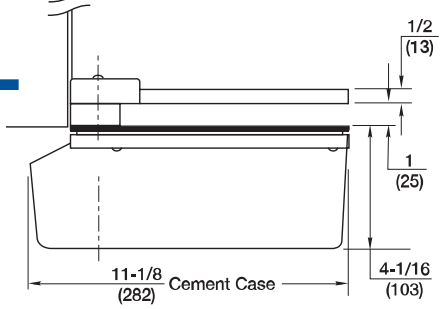

Model FL27 3/4" Offset

Application
For Fire Door Assemblies up to 3 Hours

ANSI/C06071

Product Description & Features
Identical to Model L27 except:
- Available non hold-open only
- Available for 1-3/4"(44mm) thick doors only
- Standard Top Pivot: FL180 (Ferrous) included
- Intermediate Pivot: FML19 (Ferrous) must be used as required by UL (order separately), see page 23

Model L27-20 3/4" Offset

Application
For 20-Minute Fire Door Assemblies

ANSI/C06071

Product Description & Features
Identical to Model L27 except:
- Available non hold-open only
- Standard Top Pivot: L180-20 (Bronze) included
- Intermediate Pivot: ML19-20 (Bronze) must be used as required by UL (order separately), see page 23

Extended spindles available in 1/2"(13mm) increments up to 2"(51mm)

Furnished with wood and machine screws

1-3/4" door thickness shown

RIXSON®

Model 27
Offset Hung Floor Closers

Model 27 x 1-1/2" 1-1/2" Offset

Application
Single Acting, Handed
Exterior or Interior Doors
Weight to 200 lbs.*
Door Width up to 4'0"(1219mm)

ANSI/C06041

* Door size & weight guidelines are determined using the appropriate number of intermediate pivots

Product Description & Features
- 1-1/2" offset (measured from center line of pivot to face of door) for doors with applied panels or to clear protruding trim on frame
- Built-in positive dead stop prevents door from swinging beyond the desired opening degree (specify 85, 90, 95 or 105°)
- Separate and independent valves for closing speed, latch speed and backcheck
- Delayed action available-prefix "DA"
- Available non hold-open (NHO), automatic hold open (AHO) or selective hold open (SHO) at same degree as dead stop
- Models available to meet ANSI A117.1 opening force requirements. Prefix "PH"
- Cold weather fluid available-specify "CWF" (not available for closers with "DA")
- Sealed closer available-specify "SC"
- Available with floor plate or threshold installation (floor plate shown)
- Cycolac cement case
- Vertical door adjustment
- Standard top pivot: #180 x 1-1/2 included
- Intermediate pivot required: M19 x 1-1/2 (order separately), see page 23
- Doors up to 90"(2286mm) in height should use one intermediate pivot. Each additional 30"(762mm) warrants another intermediate pivot

Technical Information
(Click here to view template)

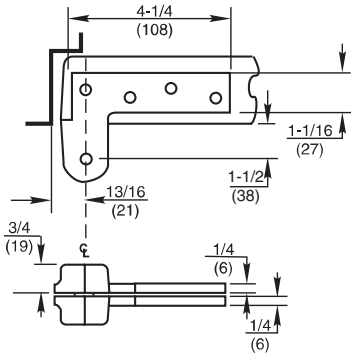

Frame stop required

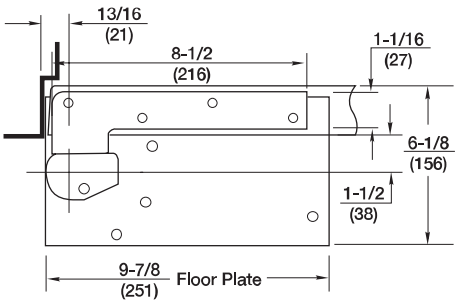

Model F27 x 1-1/2" 1-1/2" Offset

Application
For Fire Door Assemblies up to 3 Hours

ANSI/C06051

Product Description & Features
Identical to Model 27 x 1-1/2" except:
- Available non hold-open only
- Standard Top Pivot: F180 x 1-1/2" (Ferrous) included
- Intermediate Pivot: FM19 x 1-1/2" (Ferrous) must be used as required by UL (order separately), see page 23

Model 27-20 x 1-1/2" 1-1/2" Offset

Application
For 20-Minute Fire Door Assemblies

ANSI/C06041

Product Description & Features
Identical to Model 27 x 1-1/2" except:
- Available non hold-open only
- Standard Top Pivot: 180-20 x 1-1/2"(Bronze) included
- Intermediate Pivot: M19-20 x 1-1/2"(Bronze) must be used as required by UL (order separately), see page 23

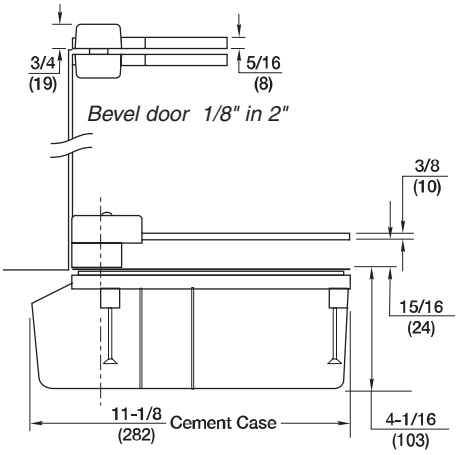

Extended spindles available in 1/2"(13mm) increments up to 2"(51mm)

Furnished with wood and machine screws

Model Q27
Offset Hung Floor Closers

Model Q27 3/4" Offset

Application
Single Acting, Handed
Exterior and Interior Doors
Weight to 350 lbs.*
Door Width up to 4'0"(1219mm)

ANSI/C06041

Product Description & Features
Surface mounted bottom arm allows closer removal without demounting door
- Floor plate installation
- Door must be 1-3/4" in thickness
- One M19 intermediate pivot included
- Doors up to 90"(2286mm) in height should use one intermediate pivot (included). Each additional 30"(762mm) or doors over 195 lbs. warrants another intermediate pivot
- Built-in positive dead stop prevents door from swinging beyond the desired opening degree (specify 85, 90, 95 or 105°)
- Separate and independent valves for closing speed, latch speed and backcheck
- Delayed action available-prefix "DA"
- Available non hold-open (NHO), automatic hold open (AHO) or selective hold open (SHO) at same degree as dead stop
- Models available to meet ANSI A117.1 opening force requirements. Prefix "PH"
- Cold weather fluid available-specify "CWF" (not available for closers with "DA")
- Cycolac cement case
- Vertical door adjustment
- Standard top pivot: #180 included

Technical Information
(Click here to view template)

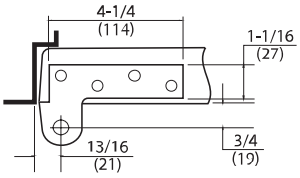

Frame stop required

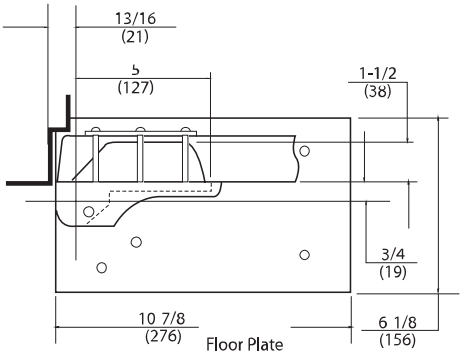

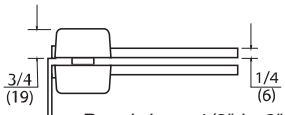

Bevel door 1/8" in 2"

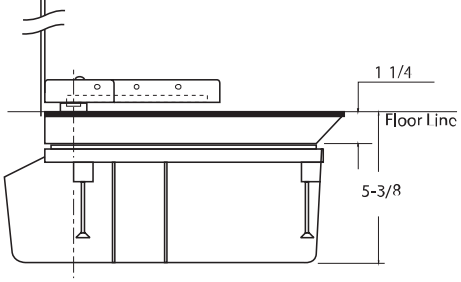

* Door size & weight guidelines are determined using the appropriate number of intermediate pivots

Model FQ27 3/4" Offset

Application
For Fire Door Assemblies up to 3 Hours

ANSI/C06051

Product Description & Features
Identical to Model Q27 except:
- Available non hold-open only
- Standard Top Pivot: F180 (Ferrous) included
- Intermediate Pivot: FM19 (Ferrous) must be used as required by UL

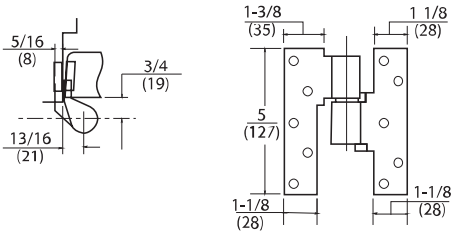

Extended spindles available in 1/2"(13mm) increments up to 2"(51mm)

Furnished with wood and machine screws

Model Q27-20 3/4" Offset

Application
For 20-Minute Fire Door Assemblies

ANSI/C06041

Product Description & Features
Identical to Model Q27 except:
- Available non hold-open only
- Standard Top Pivot: 180-20 (Bronze) included
- Intermediate Pivot: M19-20 (Bronze) must be used as required by UL

RIXSON®

Model QT27
Offset Hung Floor Closers

Model QT27 3/4" Offset

Application
Single Acting, Handed
Exterior and Interior Doors
Weight to 350 lbs.
Door Width up to 4'0"(1219mm)

ANSI/C06041

Product Description & Features
Surface mounted bottom arm allows closer removal without demounting door
- Threshold installation, no floor plate furnished
- Door must be 1-3/4" in thickness
- One M19 intermediate pivot included
- Doors up to 90"(2286mm) in height should use one intermediate pivot (included). Each additional 30"(762mm) or doors over 195 lbs. warrants another intermediate pivot
- Built-in positive dead stop prevents door from swinging beyond the desired opening degree (specify 85, 90, 95 or 105°)
- Separate and independent valves for closing speed, latch speed and backcheck
- Delayed action available-prefix "DA"
- Available non hold-open (NHO), automatic hold open (AHO) or selective hold open (SHO) at same degree as dead stop
- Models available to meet ANSI A117.1 opening force requirements. Prefix "PH"
- Cold weather fluid available-specify "CWF" (not available for closers with "DA")
- Cycolac cement case
- Vertical door adjustment
- Standard top pivot: #180 included

(Click here to view template)

Technical Information

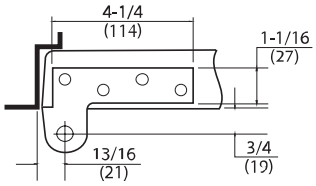

Frame stop required

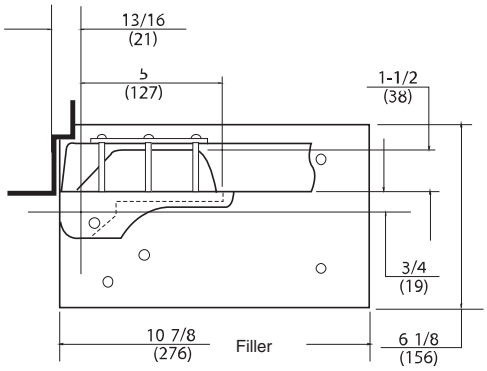

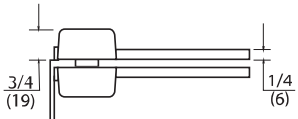

Bevel door 1/8" in 2"

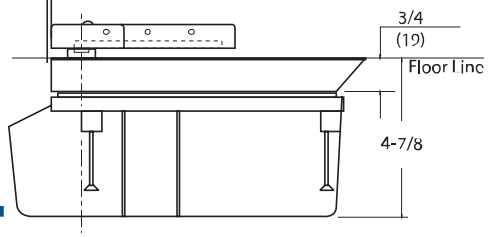

Model FQT27 3/4" Offset

Application
For Fire Door Assemblies up to 3 Hours

ANSI/C06051

Product Description & Features
Identical to Model QT27 except:
- Available non hold-open only
- Standard Top Pivot: F180 (Ferrous) included
- Intermediate Pivot: FM19 (Ferrous) must be used as required by UL

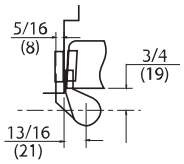

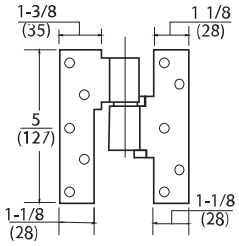

Extended spindles available in 1/2"(13mm) increments up to 2"(51mm)

Furnished with wood and machine screws

Model QT27-20 3/4" Offset

Application
For 20-Minute Fire Door Assemblies

ANSI/C06041

Product Description & Features
Identical to Model QT27 except:
- Available non hold-open only
- Standard Top Pivot: 180-20 (Bronze) included
- Intermediate Pivot: M19-20 (Bronze) must be used as required by UL

Model HM27
Offset Hung Floor Closers

Model HM27 3/4" Offset

Application
Single Acting, Handed
Exterior or Interior Doors
Hollow Metal Doors/Frames
Weight to 250 lbs.
Door Width up to 4'0"(1219mm)

ANSI/C06041

Product Description & Features
Designed for stock hollow metal doors and frames with standard weight 4-1/2" hinge preparation

- Includes three special 4-1/2" ball bearing hinges with 3/4" offset. Doors over 90" in height warrants an additional hinge
- Surface mounted bottom arm with through-bolts for 1-3/4" door thickness
- Built-in positive dead stop prevents door from swinging beyond the desired opening degree (specify 85, 90, 95 or 105°)
- Separate and independent valves for closing speed, latch speed and backcheck
- Delayed action available-prefix “DA”
- Available non hold-open (NHO), automatic hold-open (AHO) or selective hold-open (SHO) at same degree as dead stop
- Models available to meet ANSI A117.1 opening force requirements. Prefix “PH”
- Cold weather fluid available-specify “CWF” (not available for closers with “DA”)
- Sealed closer available-specify “SC”
- Available with floor plate or threshold installation (floor plate shown)
- Cycolac cement case

(Click here to view template)

Technical Information

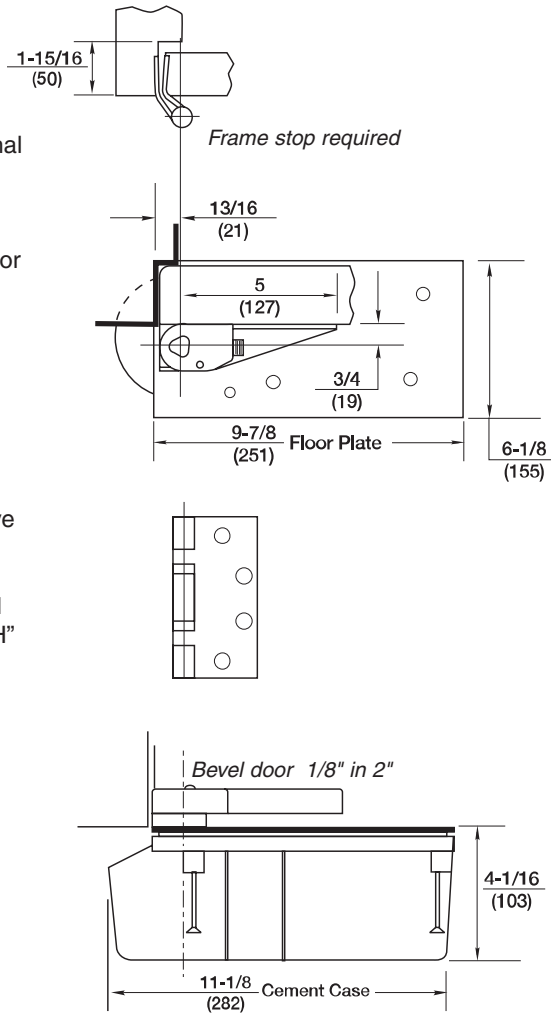

Extended spindles available in 1/2"(13mm) increments up to 2"(51mm)

Furnished with all machine screws and half wood screws

Model FHM27 3/4" Offset

Application
For Fire Door Assemblies up to 3 Hours

ANSI/C06051

Product Description & Features
Identical to Model HM27 except:

- Available non hold-open only
- Steel hinges

RIXSON®

Model 127/427 Offset & Independently Hung Floor Closers

Model 127 3/4 Offset

Application
Single Acting, Handed
Exterior or Interior Doors
Deep Reveal Applications
Weight to 250 lbs.
Door Width up to 4'0"(1219mm)

ANSI/C06041

* Door size & weight guidelines are determined using the appropriate number of intermediate pivots

Product Description & Features
Recommended for applications where vertical movement of the door at installation is not possible, such as a door inset in a deep reveal or with no ceiling clearance

- Closer has a tapered spindle and uses a Uni type bottom arm to allow door installation
- Built-in positive dead stop prevents door from swinging beyond the desired opening degree (specify 85, 90, 95 or 105°)
- Separate and independent valves for closing speed, latch speed and backcheck
- Delayed action available-prefix "DA"
- Available non hold-open (NHO), automatic hold open (AHO) or selective hold open (SHO) at same degree as dead stop
- Models available to meet ANSI A117.1 opening force requirements. Prefix "PH"
- Cold weather fluid available-specify "CWF" (not available for closers with "DA")
- Sealed closer available-specify "SC"
- Available with floor plate or threshold installation (floor plate shown)
- Cycolac cement case
- Standard top pivot: #180 included
- Intermediate pivot required: 119 (order separately), see page 22
- Doors up to 90"(2286mm) in height should use one intermediate pivot. Each additional 30"(762mm) warrants another intermediate pivot

(Click here to view template)

Technical Information

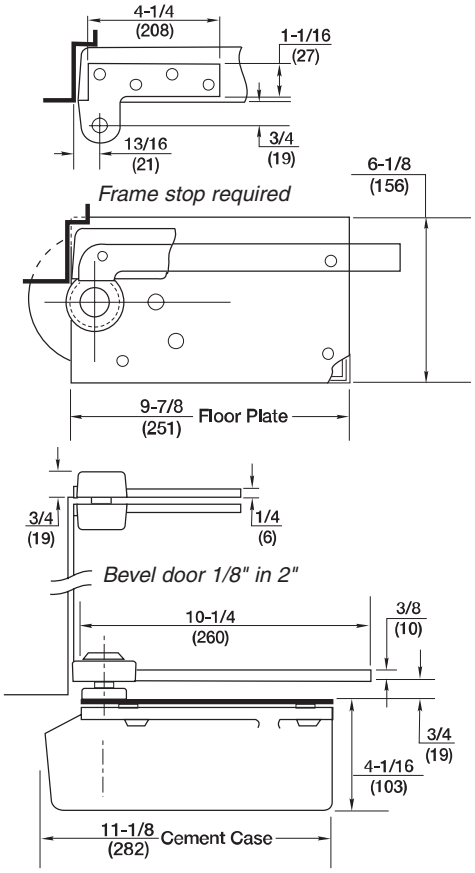

Extended spindles available in 1/2"(13mm) increments up to 2"(51mm)

Furnished with wood and machine screws

Model 427 3/4" Offset

Application
Single Acting, Handed
Exterior or Interior Doors
Deep Reveal Applications
Weight to 250 lbs.
Door Width up to 4'0"(1219mm)

ANSI/C06041

Product Description & Features
Identical to Model 127 except:

- Top pivot # 180 x 102 included
- Special bottom arm cap included

Technical Information

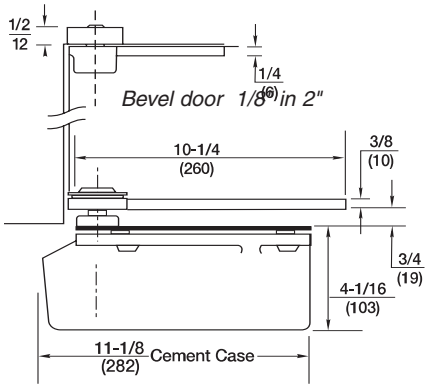

Extended spindles available in 1/2"(13mm) increments up to 2"(51mm)

Furnished with wood and machine screws

Model 327
Offset Hung Floor Closer

Model 327 Independently Hung

Application
Single Acting, Handed
Interior Doors
Door Width up to 4'0"(1219mm)

ANSI/C06031

Product Description & Features

Used as a concealed floor closer for independently hung doors - butt hinges or pocket pivots

- Door hanging means (by others) determines maximum door weight
- 90° maximum door swing
- Auxiliary stop recommended
- Includes closer, mortised door rail and slide track type bottom arm
- Separate and independent valves for closing speed, latch speed and backcheck
- Cold weather fluid available, specify “CWF”
- Not available in “PH”, “DA”, or “HO”
- Extended spindle available in 1/2" increments up to 2"
- Extended spindle required for threshold applications
- Cycolac cement case
- Specify door hanging means
- Special template may be required

Technical Information

Frame stop required

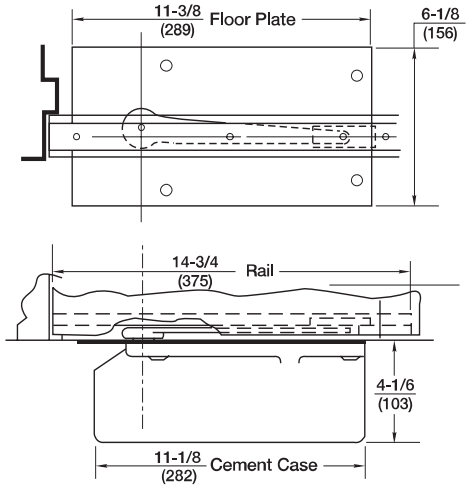

(Click here to view template)

RIXSON®

High Security Closers

Introduction

Rixson's Security 25 Series and 27 Series Offset Hung Floor Closers are designed for prisons, asylums and institutions where demounting of the door could create a safety or security hazard and where maximum security of the opening and the door closer is required.

This floor closer package is extra heavy-duty and specifically designed for use on doors that are subject to malicious abuse. The operation of the floor closer is intended to prevent inmates from vandalizing the door. These closers should be used for interior entrance or stairwell doors where egress is supervised.

The floor closer package includes extra heavy cast iron cement case, 1/4"(6mm) thick steel floor plate, heavy-duty arm and top pivot that are attached with tamper-proof fasteners.

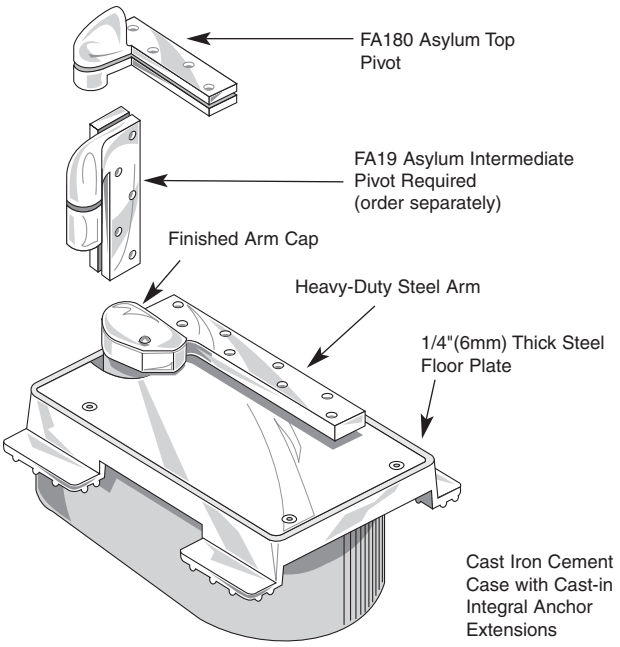

Features

- Cast iron cement case with cast-in load bearing angles ensures positive anchoring...prevents floor closer from being lifted from floor
- 1/4"(6mm) thick steel floor plate is recessed into cement case. No exposed edges–prevents floor plate from being pried. Exposed screws are Torx® screws
- FA180 "asylum type" top pivot is standard, attached with *Torx* head screws
- Heavy-duty bottom arm provides extra strength
- FA19 "asylum type" intermediate pivot required. Attached with spanner head screws
- Pressure relief valve on FSEC25 protects closer mechanism when door is forced closed against check
- Adjustable spring power can be adjusted to suit conditions
- Built-in hydraulic backcheck@160° on FSEC25
- Fully adjustable hydraulic backcheck on FSEC27
- Independent closing and latch adjustment valves on FSEC27
- All adjustments are concealed beneath solid floor plate
- Sealed closer standard...prevents water and chemicals from entering floor closer mechanism
- Available for fire door assemblies up to three hours
- Extended spindles available to raise door above finished floor if required
- Model available for "barrier free" openings to meet building codes for access by the physically handicapped
- Available in all standard architectural finishes

Specifications

Model FSEC25

Closer shall be Rixson® No. FSEC25 concealed floor closer package. Cement case to be cast iron with cast-in integral anchor extensions. 1/4"(6mm) thick steel cover plate to be recessed into lip on cement case. Hydraulic cylinder to be 2-1/8"(54mm) diameter bore and piston to have pressure relief valve. Closer shall be equipped with single valve for adjusting closing speed. Closer shall have built-in hydraulic backcheck effective at 160°. Closer mechanism shall have torsion spring operation. Bottom arm shall be 1/2"(13mm) thick steel. Top pivot shall be asylum type with security fasteners.

Model FSEC27

Closer shall be *Rixson* No. FSEC27 concealed floor closer package. Cement case to be cast iron with cast-in integral anchor extensions. 1/4"(6mm) thick steel cover plate to be recessed into lip on cement case. Closer mechanism to have individual hydraulic cylinders for closing functions and adjustable hydraulic backcheck and be operated by a torsion spring. Closing and latch speed to be controlled by two independent valves. Closer to have built-in dead stop at 85, 90, 95, or 105°. Bottom arm shall be 1/2"(13mm) thick steel. Top pivot shall be asylum type with security fasteners.

Model FSEC25/FSEC27 High Security Floor Closers

Model FSEC25 3/4" Offset Hung

Application
Single Acting, Handed
Interior Security Doors
Weight to 650 lbs.
Door Width up to 4'0"(1219mm)

BHMA/ANSI/C06052

Product Description & Features
- Allows 180° door swing (trim permitting)
- Heavy-duty bottom arm and top pivot
- Cast iron cement case with solid bearing angles for positive anchorage in floor and recessed lip for floor plate containment
- Solid 1/4"(6mm) thick steel floor plate
- Adjustable closing speed
- Built-in hydraulic backcheck cushions opening from 140° to 180°.
- Available non hold-open only
- Models available to meet ANSI A117.1 opening force requirements. Prefix "PH"
- Delayed action not available
- Sealed closer standard
- Vertical door adjustment
- Standard top pivot: # FA180 included
- Intermediate pivot recommended: FA19 (order separately), see page 23
- Doors up to 90"(2286mm) in height should use one intermediate pivot. Each additional 30"(762mm) warrants another intermediate pivot

Technical Information
(Click here to view template)

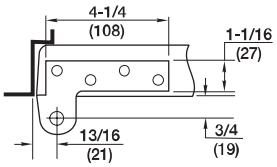

Frame stop required

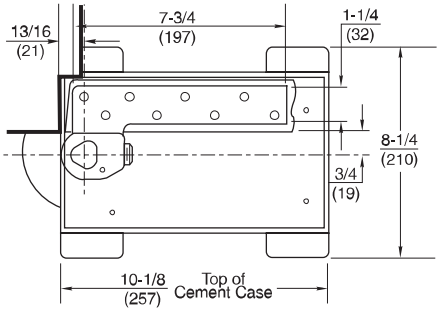

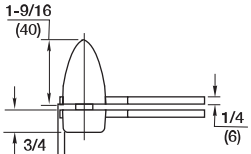

Bevel door 1/8" in 2"

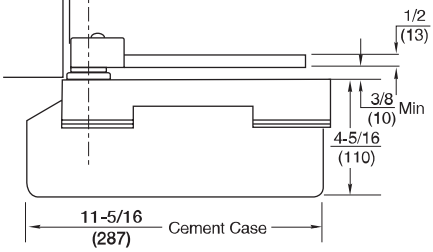

Model FSEC27 3/4" Offset Hung

Application
Single Acting, Handed
Interior Security Doors
Weight to 650 lbs.
Door Width up to 4'0"(1219mm)

BHMA/ANSI/C06051

Product Description & Features
Identical to FSEC25 except:
- Built-in positive dead stop prevents door from swinging beyond the desired opening degree (specify 85, 90, 95 or 105°)
- Separate and independent valves for closing speed, latch speed and backcheck
- Delayed action available-prefix "DA"

Extended spindles available in 1/2"(13mm) increments up to 2"(51mm)

Furnished with Torx® screws

RIXSON®

Offset Hung Top Pivots

Model 180

Application
Full Mortise
Non-handed

Product Description & Features
- Standard top pivot for the 20, 25 & 27 3/4" offset floor closers
- Available for fire door assemblies (ferrous material)–specify F180
- For 20-minute label suffix –20
- Oil-impregnated sintered bronze bearing
- Non-ferrous base metal
- 3/4"(19mm) offset (measured from centerline of pivot to face of door)
- Available with longer than standard pivot pins. Increments are 1/4"(6mm), 1/2"(13mm), 3/4"(19mm) only
- Furnished with wood and machine screws

Technical Information

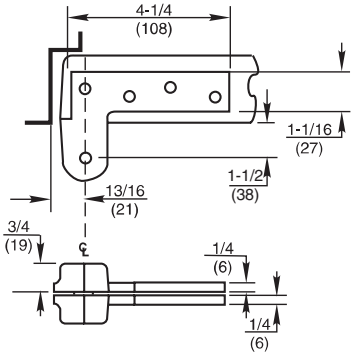

(Click here to view template)

Model 180 x 1-1/2"

Application
Full Mortise
Non-handed

Product Description & Features
- Standard top pivot for the 25 & 27 1-1/2" offset floor closer
- Available for fire door assemblies (ferrous material)–specify F180x1-1/2"
- For 20-minute label suffix –20
- Oil-impregnated sintered bronze bearing
- Non-ferrous base metal
- 1-1/2"(38mm) offset (measured from centerline of pivot to face of door)
- Available with longer than standard pivot pins. Increments are 1/4"(6mm), 1/2"(13mm), 3/4"(19mm) only
- Furnished with wood and machine screws

Technical Information

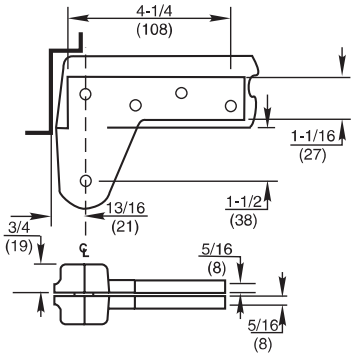

(Click here to view template)

Model H180

Application
Full Mortise, Heavy-Duty
Non-handed

Product Description & Features
- Standard top pivot for H27 floor closer
- Available for fire door assemblies (ferrous material)–specify FH180
- For 20-minute label suffix –20
- Heavy-duty needle bearings are standard
- Non-ferrous base metal
- 3/4"(19mm) offset (measured from centerline of pivot to face of door)
- Available with longer than standard pivot pins. Increments are 1/4"(6mm), 1/2"(13mm), 3/4"(19mm) only
- Furnished with wood and machine screws

Technical Information

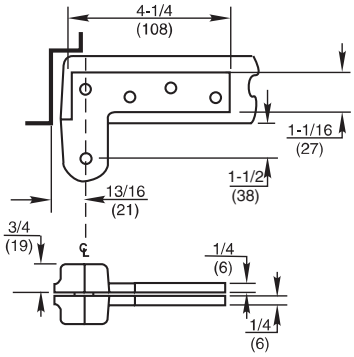

(Click here to view template)

Offset Hung Top Pivots

Model L180

Application
Lead-Lined/Heavy/High Traffic Doors
Full Mortise
Non-handed

Product Description & Features
- Standard top pivot for L25 and L27 floor closers
- Screw holes designed to straddle lead in the middle of the door
- Available to accommodate lead in door thicknesses: 1-3/4"(44mm), 2"(51mm), 2-1/4"(57mm), 2-1/2"(64mm), or 3"(76mm) – specify when ordering
- Available for fire door assemblies for 1-3/4"(44mm) doors only (ferrous material). Specify FL180
- For 20-minute label suffix –20
- Non-ferrous base material
- 3/4"(19mm) offset (measured from centerline of pivot to face of door)
- Available with longer than standard pivot pins. Increments are 1/4"(6mm), 1/2"(13mm), 3/4"(19mm) only
- Furnished with wood and machine screws

Technical Information

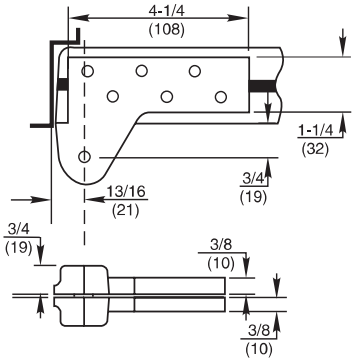

1-3/4" door thickness shown

(Click here to view template)

Model FA180

Application
Asylum Design
Full Mortise
Handed

Product Description & Features
- Standard top pivot for FSEC25 and FSEC27
- Optional top pivot for institutional use or installations where flat surfaces are objectionable
- Ferrous base metal
- 3/4"(19mm) offset (measured from centerline of pivot to face of door)
- Available with longer than standard pivot pins. Increments are 1/4"(6mm), 1/2"(13mm), 3/4"(19mm) only
- Furnished with Torx® screws

Technical Information

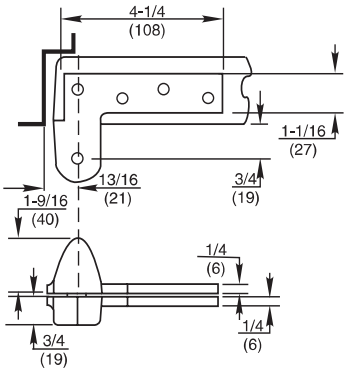

(Click here to view template)

RIXSON®

Intermediate or Side Jamb Offset Hung Pivots

Model 119

Application
Full Mortise
Handed

BHMA/ANSI NO: C07382

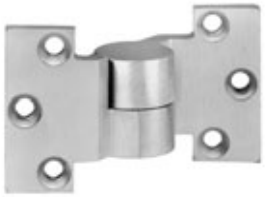

Product Description & Features
- Not load-bearing
- Available 3/4"(19mm) offset only
- Non-ferrous base metal
- Maintains door alignment
- Furnished with wood and machine screws

Technical Information

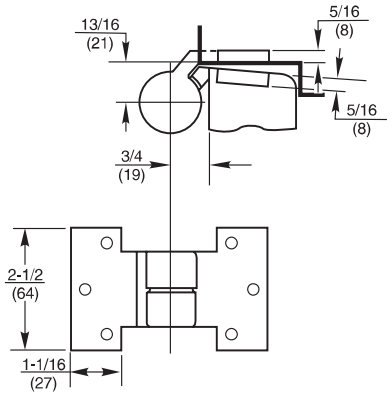

(Click here to view template)

Model M19

Application
Full Mortise
Handed

BHMA/ANSI NO: C07321

Product Description & Features
- Not load-bearing
- Maintains door alignment
- For 20-minute label suffix –20
- Non-ferrous base metal
- 3/4"(19mm) offset
- Available for fire door assemblies (ferrous material)–specify FM19
- On labeled fire door assemblies, NFPA80 requires an intermediate pivot for every additional 30"(762mm) (or fraction thereof) of door height over 60"(1524mm)
- Furnished with wood and machine screws

Technical Information

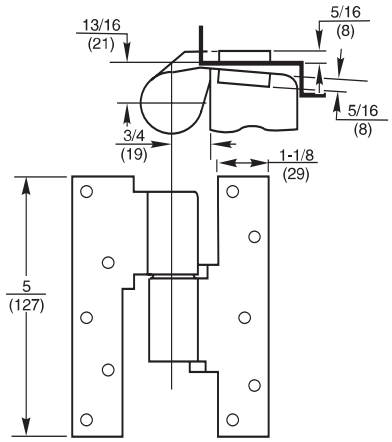

(Click here to view template)

Model M190

Application
Heavy-Duty Full Mortise
Handed

BHMA/ANSI NO: C07321

Product Description & Features
- Used when frame condition does not allow standard top pivot
- Heavy-duty needle bearing
- Non-ferrous base metal
- 3/4"(19mm) offset
- Load-bearing
- Available for fire door assemblies (ferrous material)–specify FM190
- For 20-minute label suffix –20
- On labeled fire door assemblies, NFPA80 requires an intermediate pivot for every additional 30"(762mm) (or fraction thereof) of door height over 60"(1524mm)
- Furnished with wood and machine screws

Technical Information

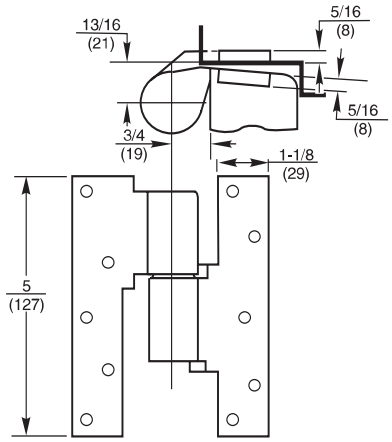

(Click here to view template)

Intermediate or Side Jamb Offset Hung Pivots

Model M19 x 1-1/2"

Application
Full Mortise
Handed

BHMA/ANSI NO: C07321

Product Description & Features
- Not load-bearing
- 1-1/2"(38mm) offset to clear decorative door or frame trim
- Maintains door alignment
- Non-ferrous base material
- Available for fire door assemblies (ferrous material)–specify FM19 x 1-1/2"
- For 20-minute label suffix –20
- On labeled fire door assemblies, NFPA80 requires an intermediate pivot for every additional 30"(762mm) (or fraction thereof) of door height over 60"(1524mm)
- Furnished with wood and machine screws

Technical Information

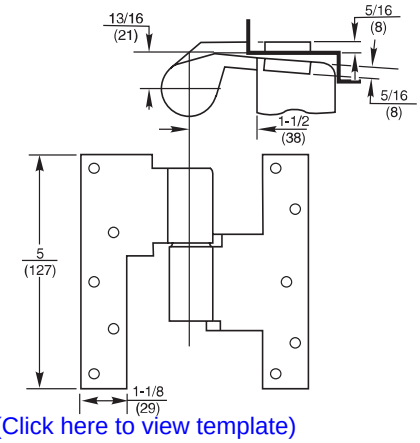

(Click here to view template)

Model ML19

Application
Full Mortise
Lead-Lined/Heavy/High Traffic Doors
Handed

BHMA/ANSI NO: C07311

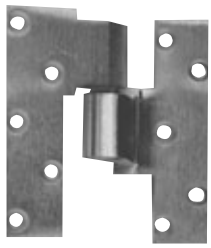

Product Description & Features
- Designed for doors with lead in center of door
- Screw holes designed to straddle the lead lining
- Available to accommodate lead in door thicknesses 1-3/4"(44mm), 2"(51mm), 2-1/4"(57mm), 2-1/2"(64mm), or 3"(76mm) – specify thickness when ordering
- Load-bearing
- Non-ferrous base material
- Available for fire door assemblies– 1-3/4"(44mm) door only – specify FML19
- For 20-minute label suffix –20
- On labeled fire door assemblies, NFPA80 requires an intermediate pivot for every additional 30"(762mm) (or fraction thereof) of door height over 60"(1524mm)
- Furnished with wood and machine screws

Technical Information

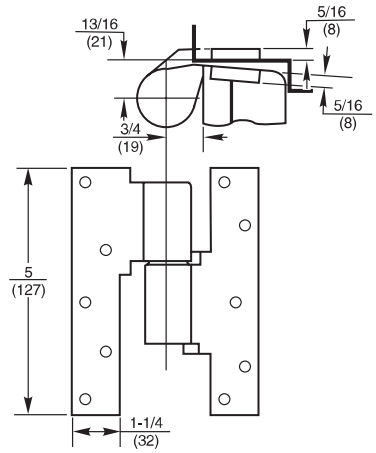

1-3/4" door thickness shown

(Click here to view template)

Model FA19

Application
Full Mortise
Asylum or High Security Applications
Handed

BHMA/ANSI NO: C07361

Product Description & Features
- Optional intermediate pivot for institutional use or installations where flat surfaces are objectionable
- Maintains door alignment
- May be used with fire door assemblies
- Ferrous base metal
- On labeled fire door assemblies, NFPA80 requires an intermediate pivot for every additional 30"(762mm) (or fraction thereof) of door height over 60"(1524mm)
- Furnished with Torx® screws

Technical Information

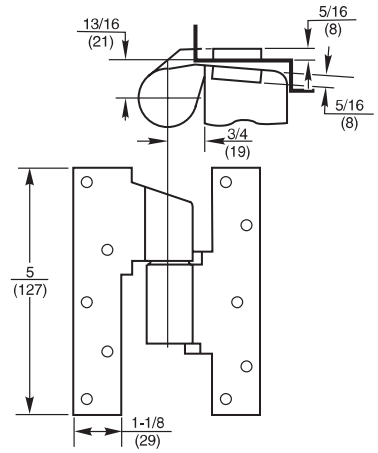

(Click here to view template)

RIXSON®

Model 21 and Model 26 Center Hung Floor Closers

Model 21 Center Hung

Application
Single Acting, Handed
Interior Doors
Weight to 200 lbs.
Sizes up to 3'0"x7'0"

ANSI/C06022

Product Description & Features
- Allows 180° door swing (trim permitting)
- Adjustable closing speed
- Built-in hydraulic backcheck cushions opening from 140° to 180°
- Available non hold-open only
- Models available to meet ANSI A117.1 opening force requirements. Prefix "PH"
- Delayed action not available
- Cast iron cement case
- Arm centering adjustment
- Arm reinforcement bracket for wood doors - prefix "W"
- Standard top pivot: #340 included
- Not allowed for fire rated doors
- Available with floor plate or threshold installation (floor plate shown)
- Applied stop required (see part # 60131 on page 34)

(Click here to view template)

Technical Information

Frame stop required at lock edge

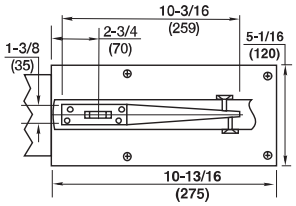

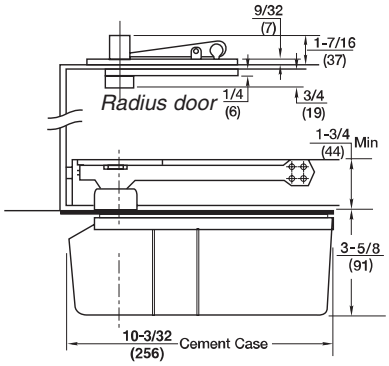

Extended spindles available in 1/2"(13mm) increments up to 2"(51mm)

Furnished with wood and machine screws

Model 26 Center Hung

Application
Single Acting, Handed
Exterior or Interior Doors
Weight to 350 lbs.
Sizes up to 4'0"x8'6"*
(1219x2591mm)

ANSI/C06022

* For doors taller than 8'6" use top pivot # 345 in lieu of 340

Product Description & Features
- Allows 180° door swing (trim permitting)
- Adjustable closing speed
- Built-in hydraulic backcheck cushions opening from 140° to 180°
- Available non hold-open only
- Models available to meet ANSI A117.1 opening force requirements. Prefix "PH"
- Delayed action not available
- Cycolac cement case
- Arm centering adjustment
- Arm reinforcement bracket for wood doors - prefix "W"
- Standard top pivot: #340 included
- Cold weather fluid available-specify "CWF"
- Sealed closer available-specify "SC"
- Available with floor plate or threshold installation (floor plate shown)
- Not allowed for fire rated doors
- Applied stop required (see part # 60131 on page 34)

(Click here to view template)

Technical Information

Frame stop required at lock edge

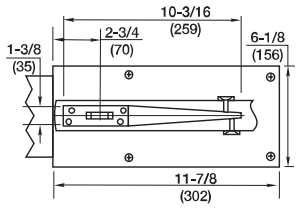

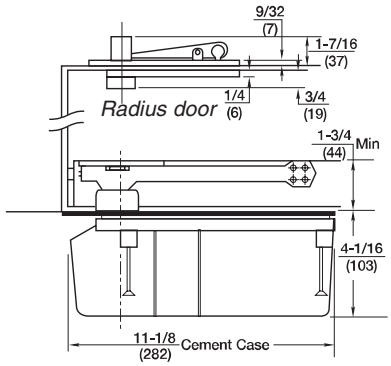

Extended spindles available in 1/2"(13mm) increments up to 2"(51mm)

Furnished with wood and machine screws

Model 28
Center Hung Floor Closers

Model 28 Center Hung

Application
Single Acting, Handed
Exterior or Interior Doors
Weight to 350 lbs.
Sizes up to 4'0"x8'6"*
(1219x2591mm)

ANSI/C06021

* For doors taller than 8'6" use top pivot # 345 in lieu of 340

Product Description & Features
- Built-in positive dead stop prevents door from swinging beyond the desired opening degree (specify 85, 90, 95 or 105°)
- Separate and independent valves for closing speed, latch speed and backcheck
- Delayed action available-prefix “DA”
- Available non hold-open (NHO), automatic hold open (AHO) or selective hold open (SHO) at same degree as dead stop
- Models available to meet ANSI A117.1 opening force requirements. Prefix “PH”
- Cold weather fluid available-specify “CWF” (not available for closers with “DA”)
- Sealed closer available-specify “SC”
- Available with floor plate or threshold installation (floor plate shown)
- Cycolac cement case
- Arm centering adjustment
- Arm reinforcement bracket for wood doors - prefix “W”
- Standard top pivot: #340 included
- Not allowed for fire rated doors
- Applied stop required (see part # 60131 on page 34)

(Click here to view template)

Technical Information

Frame stop required at lock edge

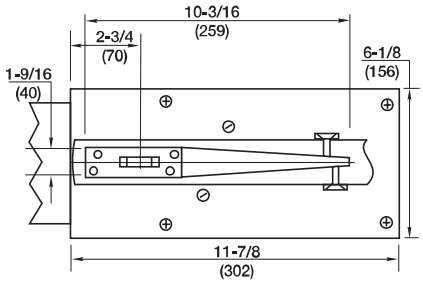

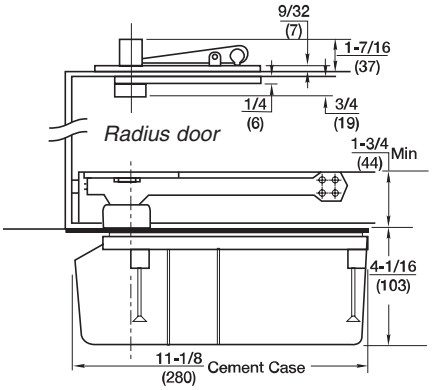

Extended spindles available in 1/2"(13mm) increments up to 2"(51mm)

Furnished with wood and machine screws

Model 28 x 554 Arm Center Hung

Application
Fully Concealed Arm

ANSI/C06021

Product Description & Features
Identical to Model 28 except:
- Arm is designed to eliminate visible adjusting screws on face of door
- Arm bolt locks arm to closer spindle –adjustments made through heel of door

(Click here to view template)

Technical Information

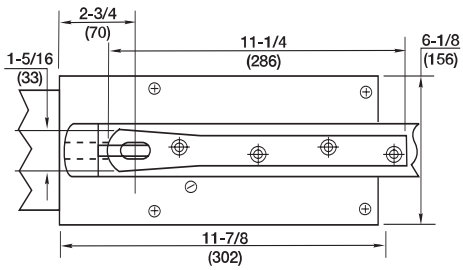

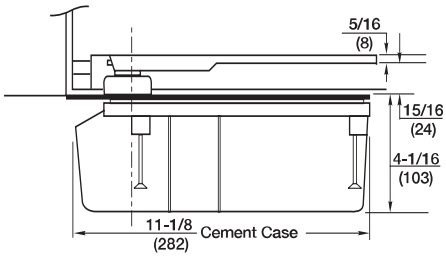

Model 328 and Model 428 Center Hung Floor Closer

Model 428 Center Hung with Patch Fittings

Application
Single Acting, Handed
Exterior or Interior Doors
Glass Doors with patch fittings
Weight up to 325 lbs.

Product Description & Features
- Patch fittings included at top and bottom for tempered glass doors 3/8"-1/2" thick
- Built-in positive dead stop prevents door from swinging beyond the desired opening degree (specify 85, 90, 95 or 105°)
- Separate and independent valves for closing speed, latch speed and backcheck
- Delayed action available-prefix “DA”
- Available non hold-open (NHO), automatic hold open (AHO) or selective hold open (SHO) at same degree as dead stop
- Models available to meet ANSI A117.1 opening force requirements. Prefix “PH”
- Cold weather fluid available-specify “CWF” (not available for closers with “DA”)
- Sealed closer available-specify “SC”
- Available with floor plate or threshold installation (floor plate shown)
- Cycolac cement case
- Not allowed for fire rated doors
- Applied stop required (see part # 60131 on page 34)

Technical Information
(Click here to view template)

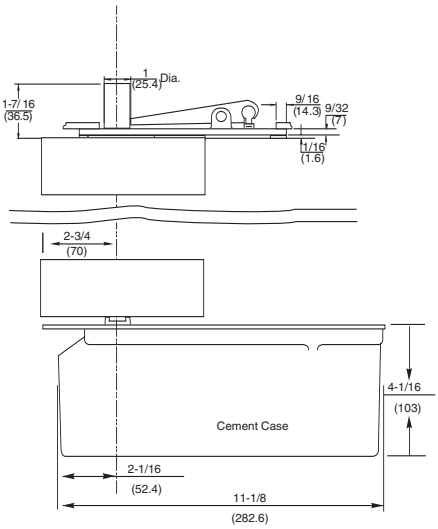

Available with extra length spindles in 1/2"(3mm) increments up to 2"(51mm)

Model 328 Center Hung

Application
Single Acting, Handed
Exterior or Interior Doors
Glass Doors with patch fittings
Weight up to 325 lbs.

Product Description & Features
- No arm or top pivot provided
- Patch fittings by others. Rixson will provide spindle configuration to fit – provide details when ordering
- Built-in positive dead stop prevents door from swinging beyond the desired opening degree (specify 85, 90, 95 or 105°)
- Separate and independent valves for closing speed, latch speed and backcheck
- Delayed action available-prefix “DA”
- Available non hold-open (NHO), automatic hold open (AHO) or selective hold open (SHO) at same degree as dead stop
- Models available to meet ANSI A117.1 opening force requirements. Prefix “PH”
- Cold weather fluid available-specify “CWF” (not available for closers with “DA”)
- Sealed closer available-specify “SC”
- Available with floor plate or threshold installation (floor plate shown)
- Cycolac cement case
- Not allowed for fire rated doors
- Applied stop required (see part # 60131 on page 34)

Technical Information
(Click here to view template)

Frame stop required at lock edge

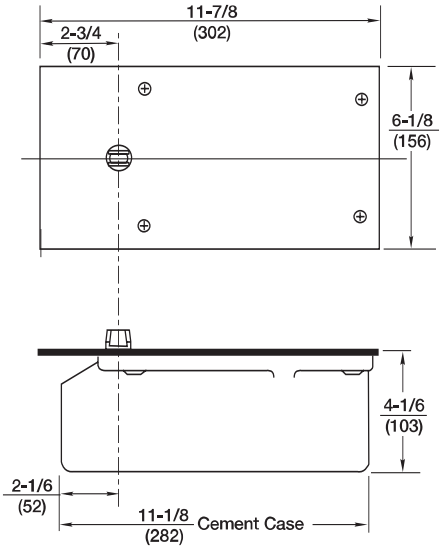

Available with extra length spindles in 1/2"(3mm) increments up to 2"(51mm)

Model H28
Center Hung Floor Closers

Model H28 Center Hung

Application
Single Acting, Handed
Exterior or Interior Doors
Extra Heavy Doors
Weight to 1000 lbs.
Sizes up to 4'0"x8'6"

ANSI/C06061

* For doors taller than 8'6" use top pivot H345 in lieu of H340

Product Description & Features
- For thick, heavy doors (2" min. thickness)
- Thrust bearing for greater load capacity
- Built-in positive dead stop prevents door from swinging beyond the desired opening degree (specify 85, 90, 95 or 105°)
- Separate and independent valves for closing speed, latch speed and backcheck
- Delayed action available-prefix "DA"
- Available non hold-open (NHO), automatic hold open (AHO) or selective hold open (SHO) at same degree as dead stop
- Models available to meet ANSI A117.1 opening force requirements. Prefix "PH"
- Cold weather fluid available-specify "CWF" (not available for closers with "DA")
- Sealed closer available-specify "SC"
- Available with floor plate or threshold installation (floor plate shown)
- Cast iron cement case
- Standard top pivot: H340 included
- Not allowed for fire rated doors
- Applied stop required (see part # 60131 on page 34)

(Click here to view template)

Technical Information

Frame stop required at lock edge

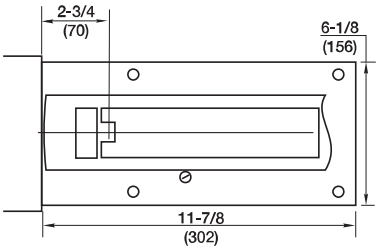

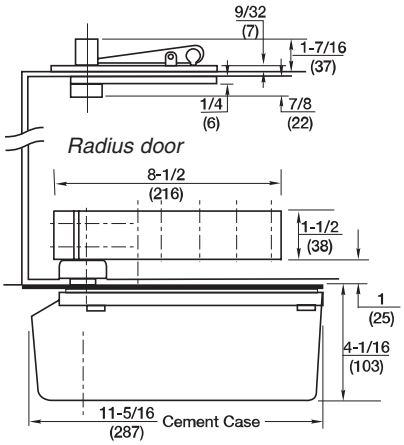

Extended spindles available in 1/2"(13mm) increments up to 2"(51mm)

Furnished with wood and machine screws

Model H28 x 587 Arm Center Hung

Application
Side Load Arm

ANSI/C06061

Product Description & Features
Identical to Model H28 except:
- Special side load arm for 1-3/4" thick doors
- Allows pivot point to be moved away from edge of door

(Click here to view template)

Technical Information

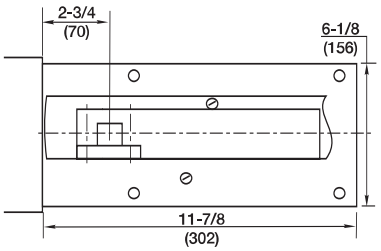

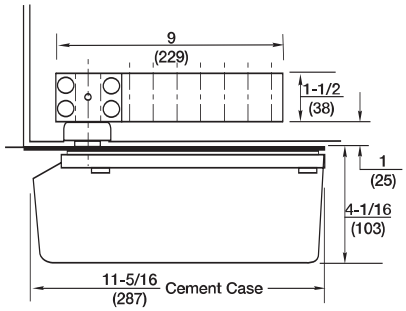

RIXSON®

Model EH28 and Model 30/40 Center Hung Floor Closers

Model EH28 Center Hung

Application

Single Acting, Handed
Interior Doors
Floor Closer for Power Transfer
Weight to 500 lbs.
Sizes up to 4'0"x8'6"
(1219x2591mm)

* For doors taller than 8'6" use top pivot H345 in lieu of H340

Product Description & Features

- Provides power transfer through closer spindle. Low voltage, Class II wiring (2 wire, 18 gauge)
- 2" min. thickness (for 1-3/4" thick doors, specify "587 arm") SPLO 3612
- Thrust bearing for greater load capacity
- Built-in positive dead stop prevents door from swinging beyond the desired opening degree (specify 85, 90, 95 or 105°)
- Separate and independent valves for closing speed, latch speed and backcheck
- Delayed action available-prefix "DA"
- Available non hold-open (NHO), automatic hold open (AHO) or selective hold open (SHO) at same degree as dead stop
- Models available to meet ANSI A117.1 opening force requirements. Prefix "PH"
- Cold weather fluid available-specify "CWF" (not available for closers with "DA")
- Sealed closer available-specify "SC"
- Available with floor plate or threshold installation (floor plate shown)
- Cast iron cement case
- Standard top pivot: H340 included
- Not allowed for fire rated doors
- Applied stop required (see part # 60131 on page 34)

(Click here to view template)

Technical Information

Frame stop required at lock edge

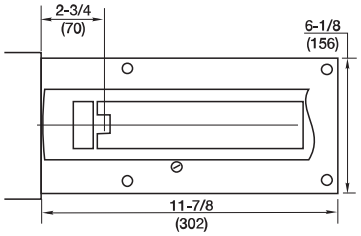

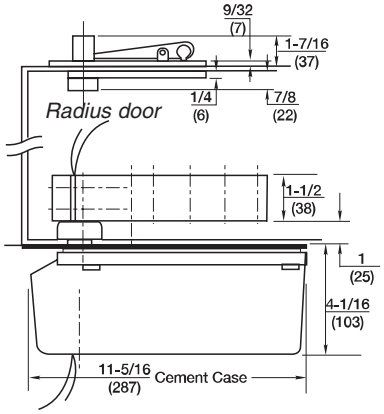

Extended spindles available in 1/2"(13mm) increments up to 2"(51mm)

Furnished with wood and machine screws

Model 30/40 Center Hung

Application

30
Double Acting, Non-handed
Interior Doors
Weight to 200 lbs.
Sizes up to 4'0"x8'6"
(1219x2591mm)

40
Double Acting, Non-handed
Interior Doors
Weight to 300 lbs.
Sizes up to 4'0"x8'6"
(1219x2591mm)

* For doors taller than 8'6" use top pivot # 345 in lieu of 340

ANSI/C06012

Product Description & Features

- Adjustable closing speed valves for each direction of door swing
- Mechanism returns door to center
- Available non hold-open (NHO) or automatic hold open (AHO) at 90° (requires 95° swing)
- Maximum door opening 103°
- Overhead stop recommended for exterior or high traffic doors
- Models available to meet ANSI A117.1 opening force requirements. Prefix "PH"
- Cold weather fluid available-specify "CWF"
- Sealed closer available-specify "SC"
- Available with floor plate or threshold installation (floor plate shown)
- Steel cement case
- Arm centering adjustment
- Arm reinforcement bracket for wood doors - prefix "W"
- Standard top pivot: #340 included
- Not allowed for fire rated doors
- Applied stop required (see part # 60131 on page 34)

(Click here to view template)

Technical Information

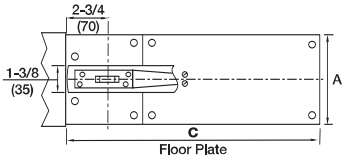

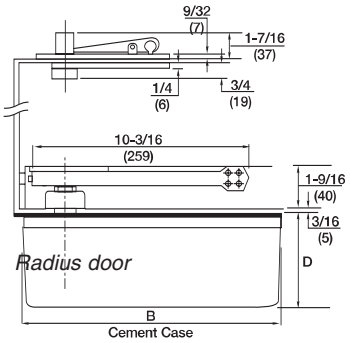

Closer Number	Dimensions			
	A	B	C	D
30	5-1/2 (140)	14-9/16 (370)	15-1/8 (384)	3-5/8 (92)
40	6-1/8 (156)	17 (432)	17-1/4 (438)	4-1/16 (103)

Extended spindles available in 1/2"(13mm) increments up to 2"(51mm)

Furnished with wood and machine screws

Model H40
Center Hung Floor Closers

Model H40 Heavy-Duty

Application
Double Acting, Non-handed
Interior Doors
Weight to 1000 lbs.
Sizes up to 4'0"x8'6"
(1219x2591mm)

ANSI/C06012

* For doors taller than 8'6" use to pivot H345 in lieu of H340

Product Description & Features
- For thick, heavy doors (2" min. thickness)
- Thrust bearing for greater load capacity
- Adjustable closing speed valves for each direction of door swing
- Mechanism returns door to center
- Available hold-open at 90° or 100°
- Maximum door opening 103°
- Overhead stop recommended for exterior or high traffic doors
- Models available to meet ANSI A117.1 opening force requirements. Prefix "PH"
- Cold weather fluid available-specify "CWF"
- Sealed closer available-specify "SC"
- Available with floor plate or threshold installation (floor plate shown)
- Steel cement case
- This arm does not allow door centering adjustment. Not recommended for pairs of doors
- Standard top pivot: #H340 included
- Not allowed for fire rated doors
- Applied stop required (see part # 60131 on page 34)

(Click here to view template)

Technical Information

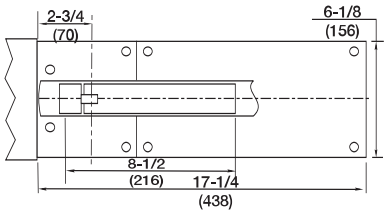

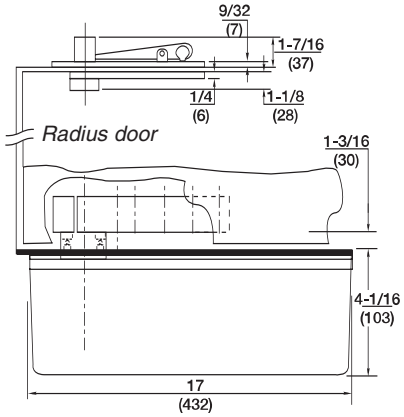

Extended spindles available in 1/2"(13mm) increments up to 2"(51mm)

Furnished with wood and machine screws

Model H40 x 587 Arm Center Hung

Application
Side Load Arm

ANSI/C06012

Product Description & Features
Identical to Model H40 except:
- Special side load arm for 1-3/4" thick doors
- Allows pivot point to be moved away from edge of door

(Click here to view template)

Technical Information

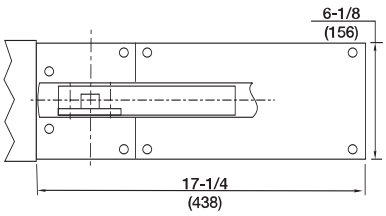

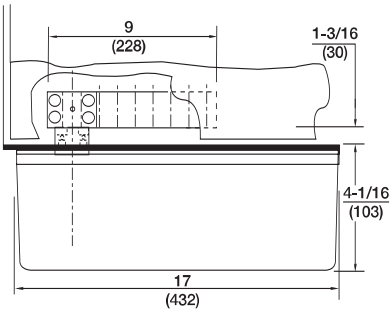

Center Hung Top Pivots

Model 340

Application
Fully Concealed
Non-handed

Product Description & Features
- Standard top pivot for Models 21, 26, 28, 30 and 40 floor closers
- Walking beam-type pivot–1/2"(13mm) diameter pivot pin with 3/4"(19mm) engagement
- Oil-impregnated sintered bronze bearing
- Completely concealed when door is closed
- Available with longer than standard pivot pins. Increments are 1/4"(6mm), 1/2"(13mm), 3/4"(19mm) only
- Furnished with wood and machine screws
- For taller doors use top pivot 345 instead

Technical Information

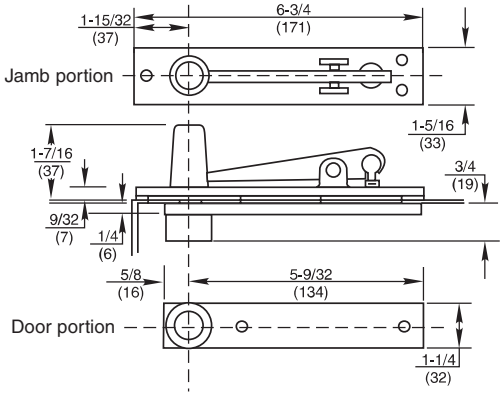

(Click here to view template)

Model H340

Application
Fully Concealed
Heavy-Duty
Non-handed

Product Description & Features
- Standard top pivot for Models H28 and H40 Series floor closers
- Walking beam-type pivot–11/16"(17mm) diameter pivot pin with 3/4"(19mm) engagement
- Heavy-duty needle bearing
- Completely concealed when door is closed
- Available with longer than standard pivot pins. Increments are 1/4"(6mm), 1/2"(13mm), 3/4"(19mm) only
- Furnished with wood and machine screws
- For taller doors use top pivot H345 instead

Technical Information

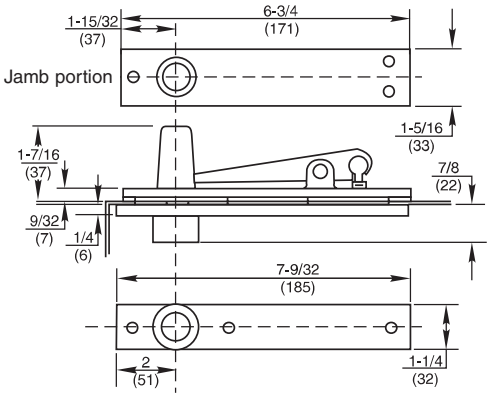

(Click here to view template)

Model 345

Application
Fully Concealed
Center Hung
Non-handed
Earthquake Tolerant
Taller Doors

Product Description & Features

- Long pivot pin engages in top of door 1-3/4"(44mm). Ideal for locations where there is a fear of dramatic building settling
- Can be used with any center hung bottom pivot. Order the bottom pivot LTP (less top pivot) and then the 345 on a separate line
- Walking beam-type pivot–1/2"(13mm) diameter pivot pin
- Oil-impregnated sintered bronze bearing
- Completely concealed when door is closed
- Furnished with wood and machine screws
- For doors over 8'6" in height

Technical Information

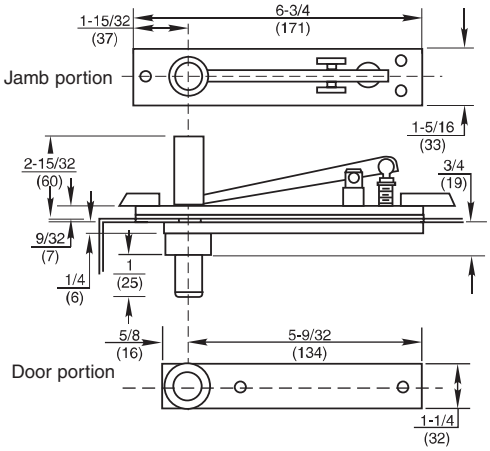

(Click here to view template)

Model H345

Application
Fully Concealed
Center Hung
Heavy-Duty
Non-handed
Earthquake Tolerant
Taller Doors

Product Description & Features

- Long pivot pin engages in top of door 1-3/4"(44mm). Ideal for locations where there is a fear of dramatic building settling
- Can be used with any center hung bottom pivot. Order the bottom pivot LTP (less top pivot) and then the H345 on a separate line
- Walking beam-type pivot–3/4"(13mm) diameter pivot pin
- Heavy-duty needle bearing
- Completely concealed when door is closed
- Furnished with wood and machine screws
- For doors over 8'6" in height

Technical Information

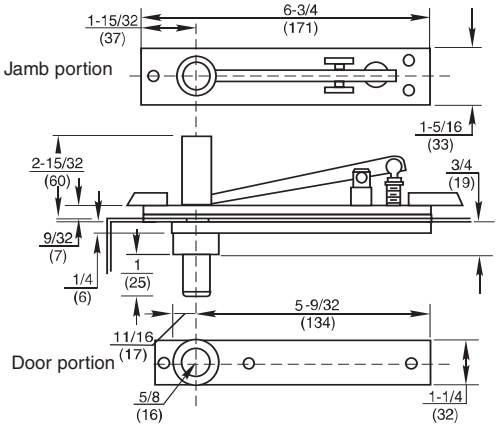

(Click here to view template)

Accessories
Designed for Special Applications

- Rixson® product specialists can also provide solutions to back-to-back mounted doors with narrow mullion.
- *Rixson*'s library offers over 5,000 design layouts for special requirements of heavy-duty floor closers, standard-duty floor closers, pivot sets, overhead holders and stops, thresholds, and fire/life safety.
- Contact your *Rixson* representative for special applications.

185 Quickspotter

Application
This kit can be supplied for all floor closers. It comes with a spindle locator plate for offset and center hung installations, two spotter straps with mounting screws and built-in level.

Metal straps are attached to the cement case, and locator indicates proper placement of spindle. The level ensures accurate installation.

When ordering specify the closer to be installed.

May be used on Models 25, 26, 27, 28, 30, 40.

Twin Cement Case

Application
25 and 27 closers cannot be mounted back to back where space between doors is less than 2-7/8"(73mm), without modification. When a 2"(51mm) or 1-7/8"(48mm) mullion is the only separation for these offset closers, a twin cement case must be furnished.

The closers are also modified.

When a twin cement case is ordered, mullion width must be indicated and closers must be ordered at the same time. Field modification to standard product is not possible.

SPLO 795

Application
When a shallow concrete floor (less than 4-1/2") presents installation difficulties, there is no need to sacrifice proper door control. Heavy-duty closers (27 and 28) that are normally furnished with cycolac cases may be ordered with metal cases that have steel angles welded to the sides. (For 30/40 series closers contact factory.)

When concrete is poured the only concern is that the angles be stable.

Accessories Designed for Special Applications

SPLO 1101

(Click here to view template)

Application
Oftentimes, expansion joints present installation problems.

A cement case that is normally surrounded by concrete will now be butted on one side to a flexible expansion joint.

To stabilize this installation, an angle is applied to one side of the cement case.

To be used with 27 or 28 closer (not L or H Series closers).

Specify Hand.

Cover Pans

(Click here to view template)

Application
To ensure the aesthetics of a continuous floor line, a cover pan can be used in lieu of a closer floor plate. A cover pan (specify closer) is filled with flooring material (terrazzo, marble, tile, etc.) and is then placed on top of the floor closer. This allows maintenance to the floor closer if problems should arise.

When ordering a terrazzo pan, specify stainless steel or brass, exact closer being used, hand, and depth of pan. (7/8"(22mm) is standard.) When ordering the floor closer deduct cost of floor plate, add for extended spindles, and add for cover pan. Closers that are “buried” under floor materials that do not have cover pans will not be covered by warranty.

For depths and spindle information, refer to “Templates” and “catalogued special layouts.”

SPLO 438

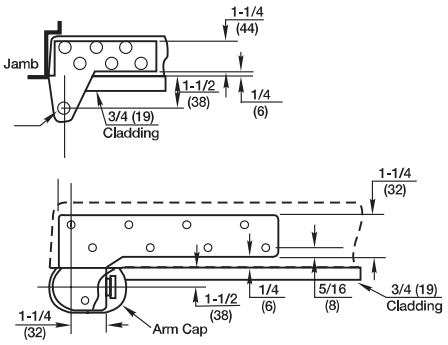

(Click here to view template)

Application
Special layout 438 is available for doors with 3/4"(19mm) – 1"(25mm) cladding and weight less than 500 pounds.

For cladding greater than 3/4"(19mm) contact technical support.

Available with L27 floor closer.

Intermediate pivots are required. Specify ML19 x SPLO438 (order separately).

Accessories
Designed for Special Applications

60131 Applied Stop

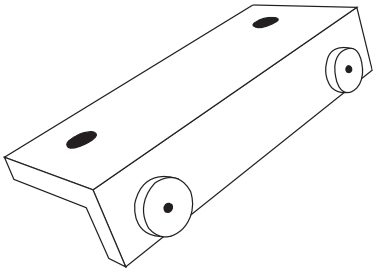

Application
For center hung doors with single acting closers. Mount to underside of frame head to keep doors from resting past center.

Technical Information

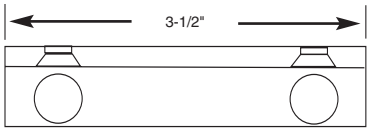

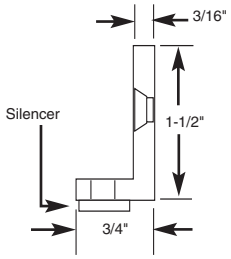

RollerMate™ 10600 Caster for Leading Door Edge

Product Description & Features
- Casters are required for all doors over 5' wide that are pivoted near the pivot edge of the door
- Can assist doors weighing up to 730 pounds. For doors up to 1500 pounds model 10602 should be used
- Metal doors minimum1-3/4" thickness
- Wood doors minimum 2-1/4" thickness
- (3) 1/16" shim plates included
- 3/16 adjustment after door is installed.
- End Cap to finish off edge of door
- Hollow metal mounting plate available
- For low frequency usage
- For interior door installations

Technical Information

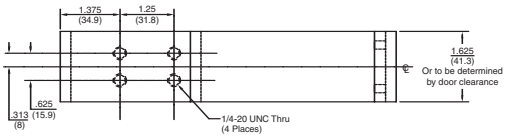

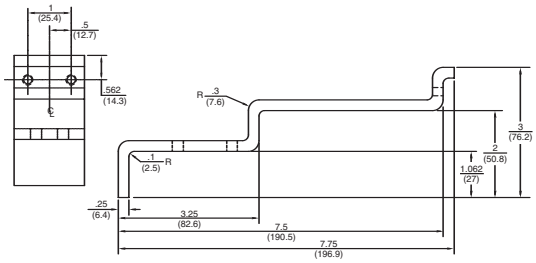

2604 Pivot Locator

Product Description & Features
- May be used with offset or center hung installations
- Plumb line not included

Technical Information

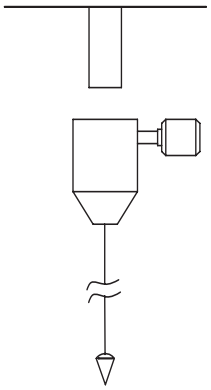

MODEL 20

Right Hand Shown
3/4" Offset

180 Screw Kit
*107014 - * Machine (2 required)*
*107114 - * Wood (2 required)*

Arm Screw Kit
107044 Machine
107144 Wood

Floor Plate Screw Kit
*107004 -**

Cement Case Screw Kit
107046

** specify finish*

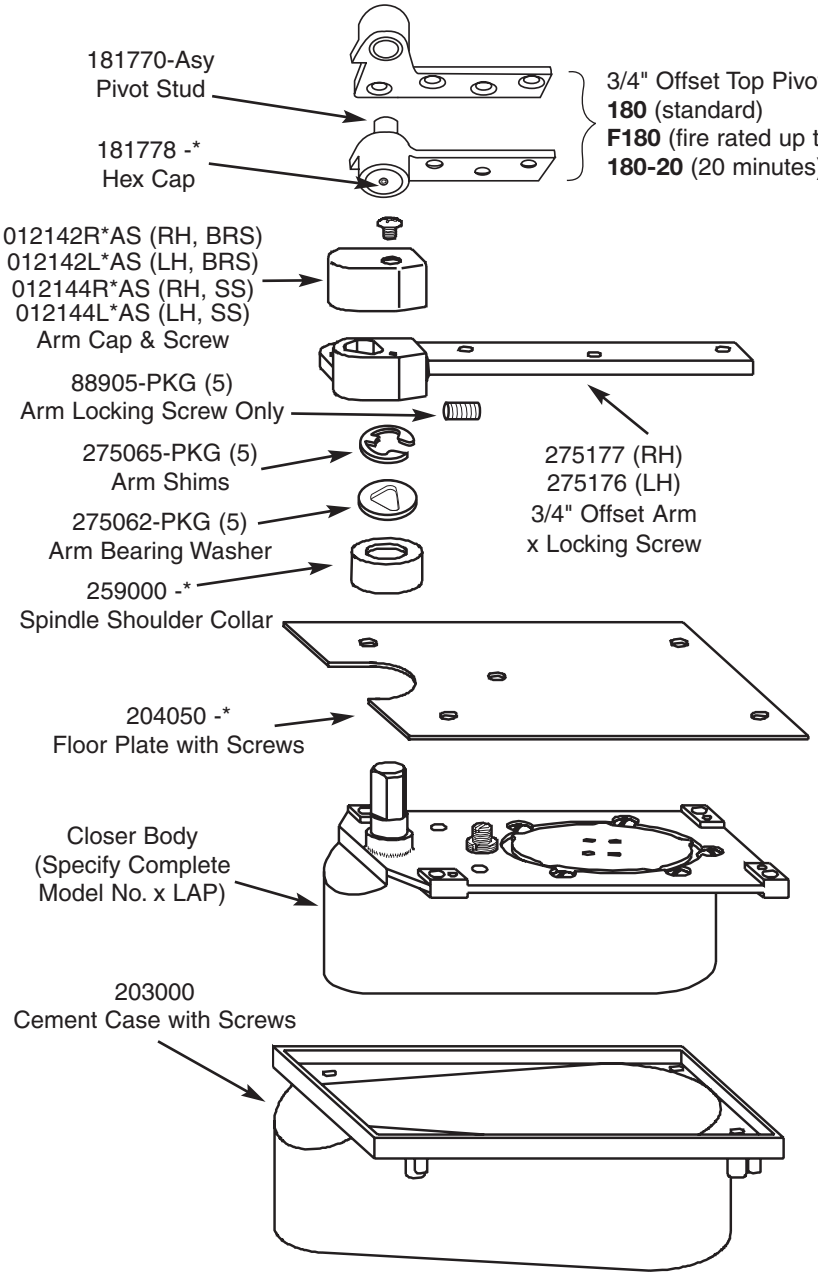

Bottom Arm Package
252050R* (RH)
252050L* (LH)

Package includes:
arm locking screw,
arm cap and screw,
and spindle shoulder collar

Closers prior to 1988 use Arm Cap 012132

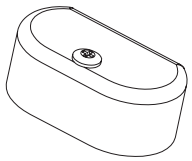

MODEL 25

Right Hand Shown
3/4" Offset

180 Screw Kit
*107014 - * Machine (2 required)*
*107114 - * Wood (2 required)*

Arm Screw Kit
107044 Machine
107144 Wood

Floor Plate Screw Kit
*107004 -**

Cement Case Screw Kit
107046

** specify finish*

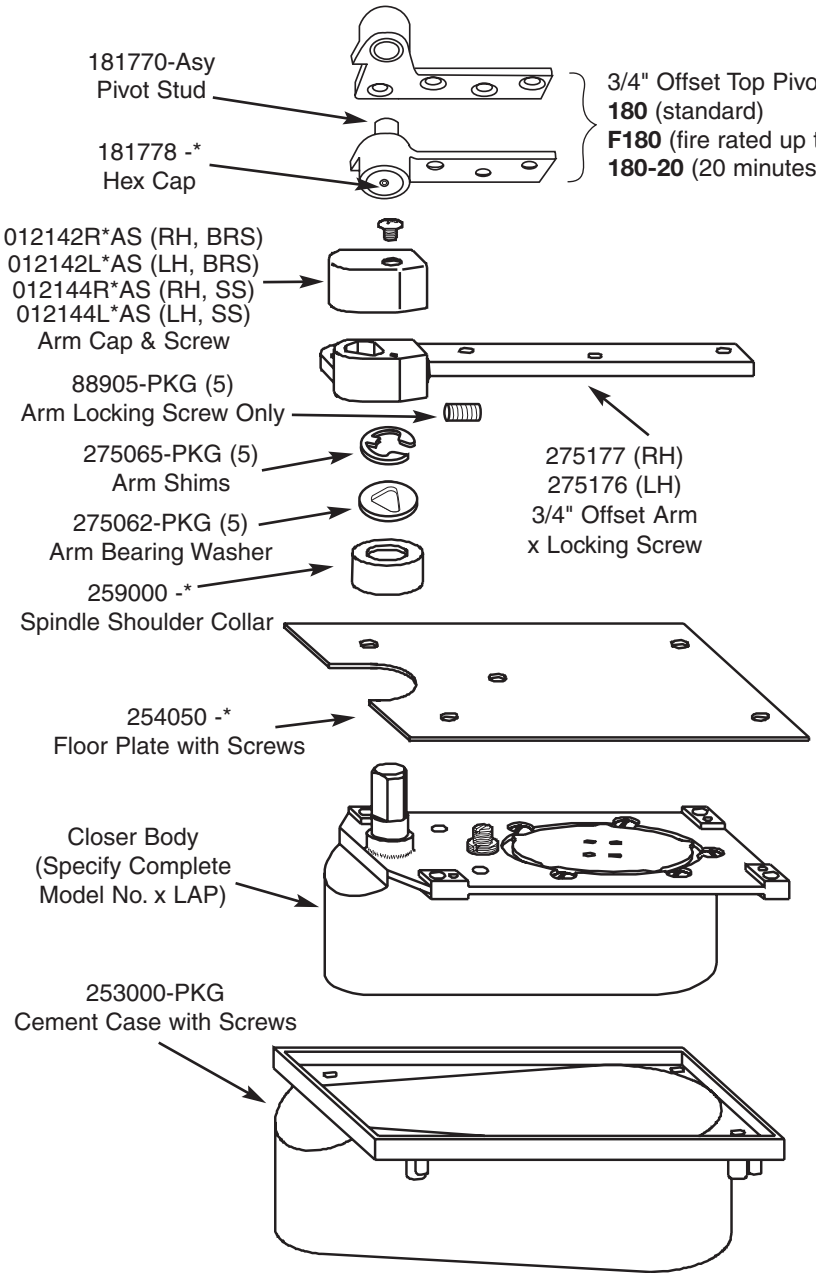

Bottom Arm Package
252050R* (RH)
252050L* (LH)

Package includes:
arm locking screw,
arm cap and screw,
and spindle shoulder collar

Closers prior to 1988 use Arm Cap 012132

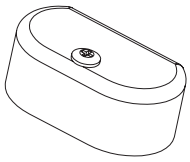

For 25 x 1-1/2" Offset
1-1/2" Offset Top Pivot Assembly
180 x 1-1/2"(standard)
F180 x 1-1/2"(fire rated up to 3 hours)
180-20 x 1-1/2"(20 minutes)

275167 -*
1-1/2" Offset Arm x Locking Screw

Bottom Arm Package
1-1/2" Offset
252060 -*

MODEL L25

Right Hand Shown
3/4" Offset Only

L180 Screw Kit
*107016 - * Machine (2 required)*
*107116 - * Wood (2 required)*

Arm Screw Kit
107048 Machine (2 required)
107144 Wood (2 required)

Floor Plate Screw Kit
*107004 -**

Cement Case Screw Kit
107046

*** specify finish**

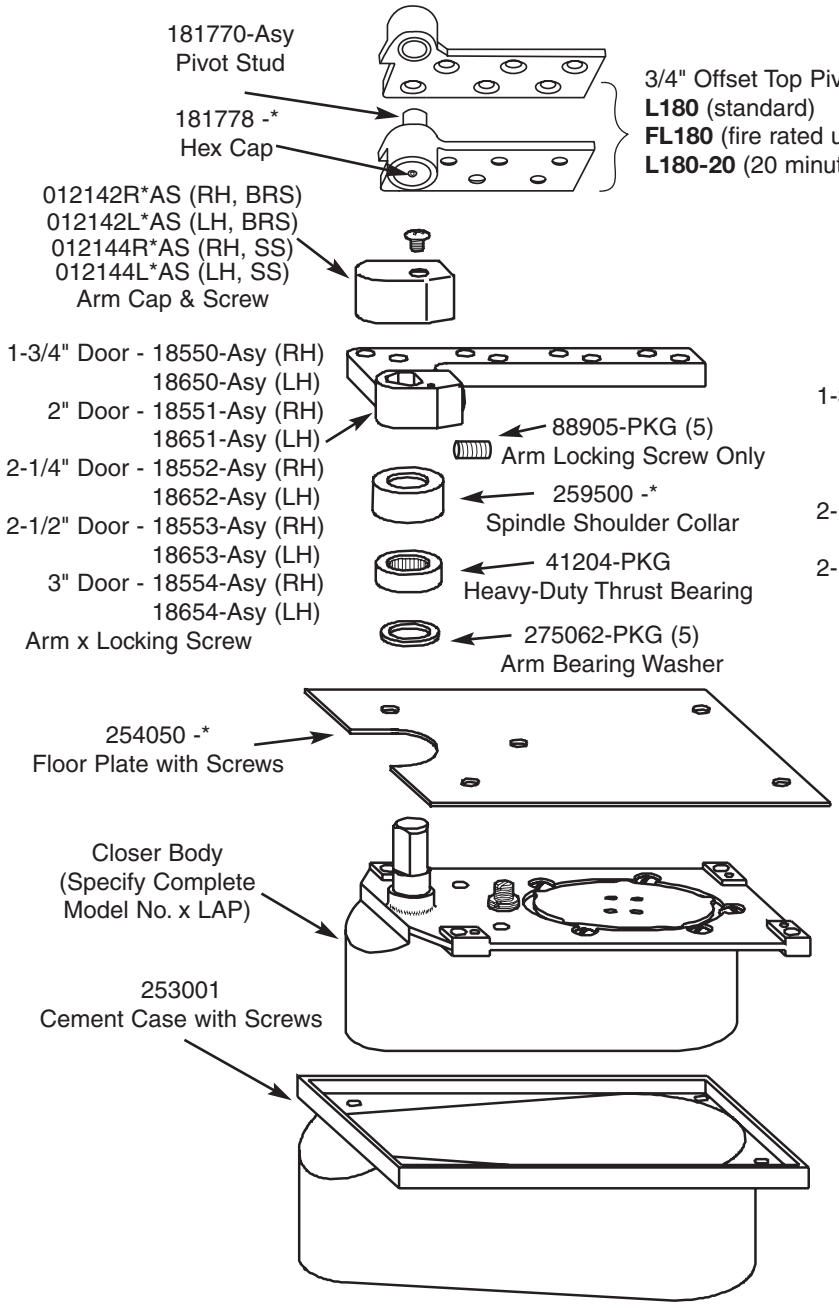

Bottom Arm Package
1-3/4" Door - 252051R* (RH)
252051L* (LH)
2" Door - 252052R* (RH)
252052L* (LH)
2-1/4" Door - 252053R* (RH)
252053L* (LH)
2-1/2" Door - 252054R* (RH)
252054L* (LH)
3" Door - 252055R* (RH)
252055L* (LH)

Package includes:
arm, arm locking screw,
arm cap and screw,
and shoulder collar

Closers prior to 1988 use Arm Cap 012132

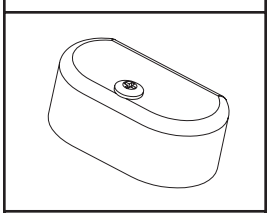

MODEL 27

Right Hand Shown
3/4" Offset

180 Screw Kit
*107014 - * Machine (2 required)*
*107114 - * Wood (2 required)*

Arm Screw Kit
107044 Machine
107144 Wood

Floor Plate Screw Kit
*107004 -**

Cement Case Screw Kit
107046

** specify finish*

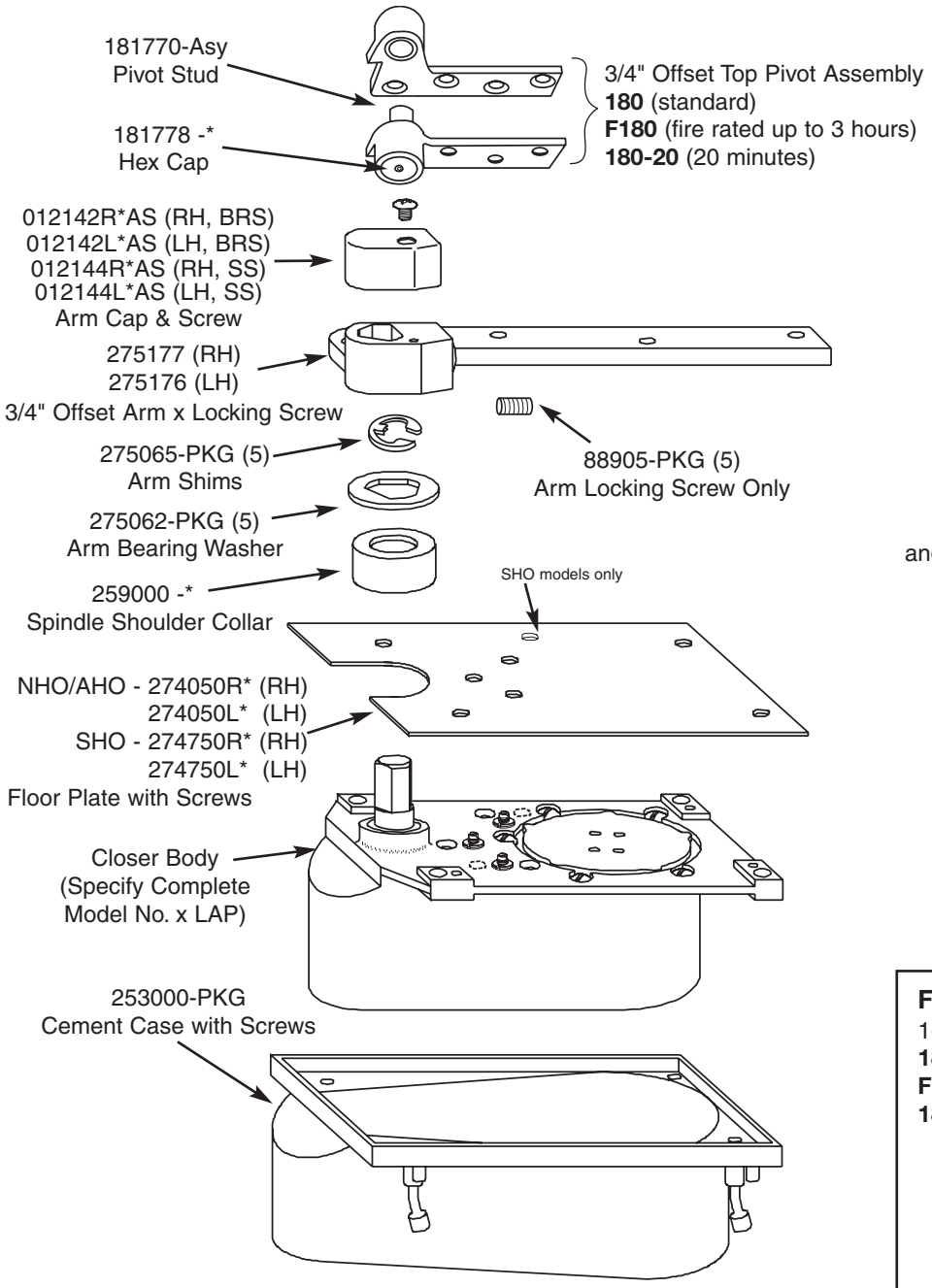

Bottom Arm Package
252050R* (RH)
252050L* (LH)

Package includes:
arm, locking screw,
arm cap and screw,
and spindle shoulder collar

Closers prior to 1988 use Arm Cap 012132

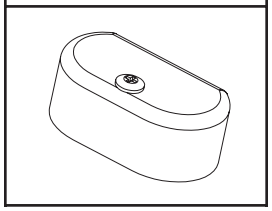

For 27 x 1-1/2" Offset
1-1/2" Offset Top Pivot Assembly
180 x 1-1/2"(standard)
F180 x 1-1/2"(fire rated up to 3 hours)
180-20 x 1-1/2"(20 minutes)

275167 -*
1-1/2" Offset Arm x Locking Screw

Bottom Arm Package
1-1/2" Offset
252060 -*

MODEL H27

Right Hand Shown
3/4" Offset Only

H180 Screw Kit
*107014 - * Machine (2 required)*
*107114 - * Wood (2 required)*

Arm Screw Kit
107048 Machine (2 required)
107144 Wood (2 required)

Floor Plate Screw Kit
*107004 -**

Cement Case Screw Kit
107046

*** specify finish**

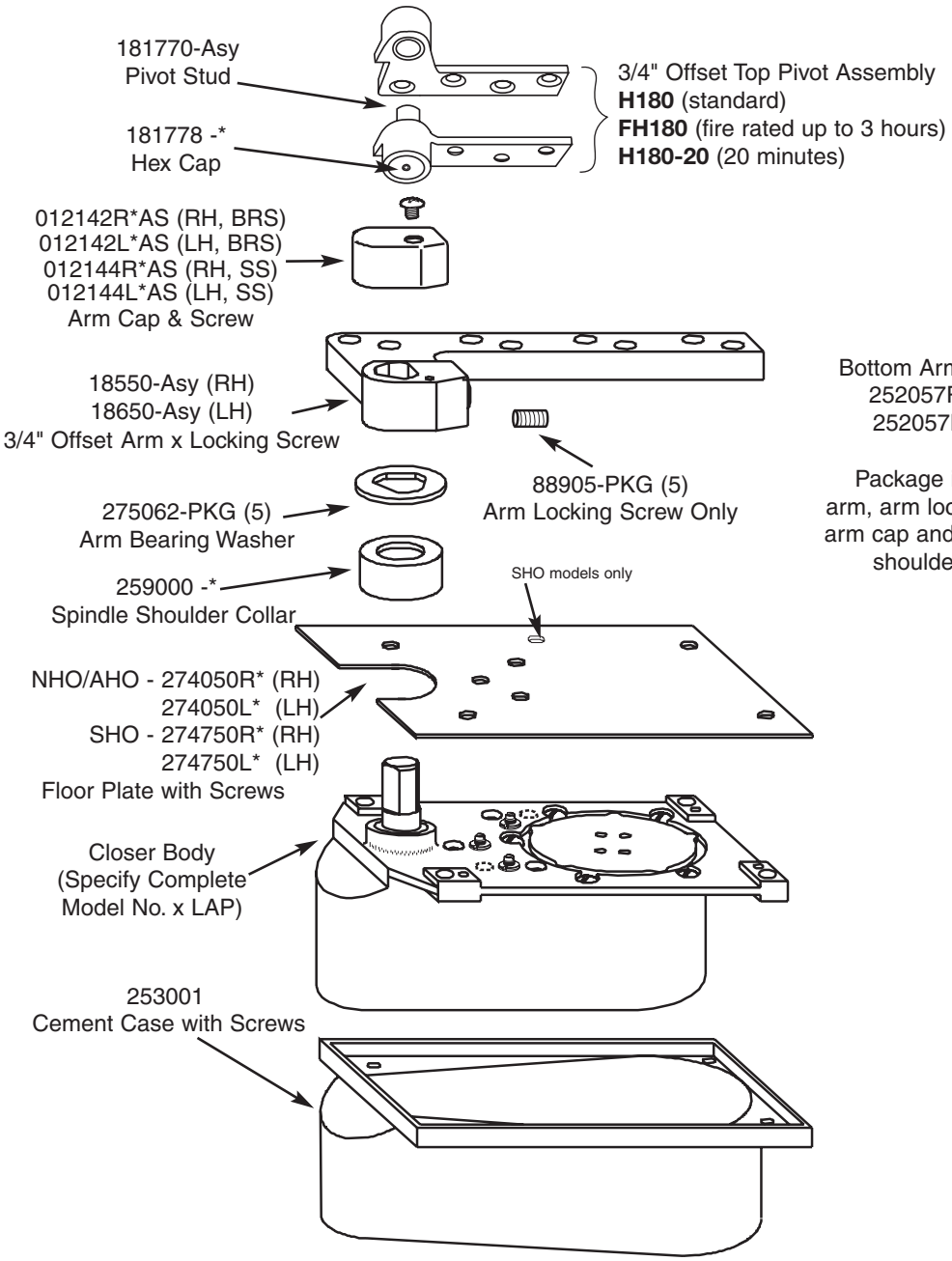

Bottom Arm Package
252057R* (RH)
252057L* (LH)

Package includes:
arm, arm locking screw,
arm cap and screw, and
shoulder collar

Closers prior to 1988 use Arm Cap 012132

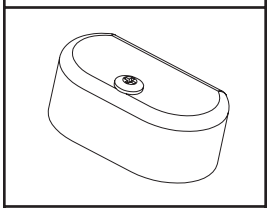

MODEL L27

Right Hand Shown
3/4" Offset Only

L180 Screw Kit
*107016 - * Machine (2 required)*
*107116 - * Wood (2 required)*

Arm Screw Kit
107048 Machine (2 required)
107144 Wood (2 required)

Floor Plate Screw Kit
*107004 -**

Cement Case Screw Kit
107046

** specify finish*
***= 1-3/4" door only*

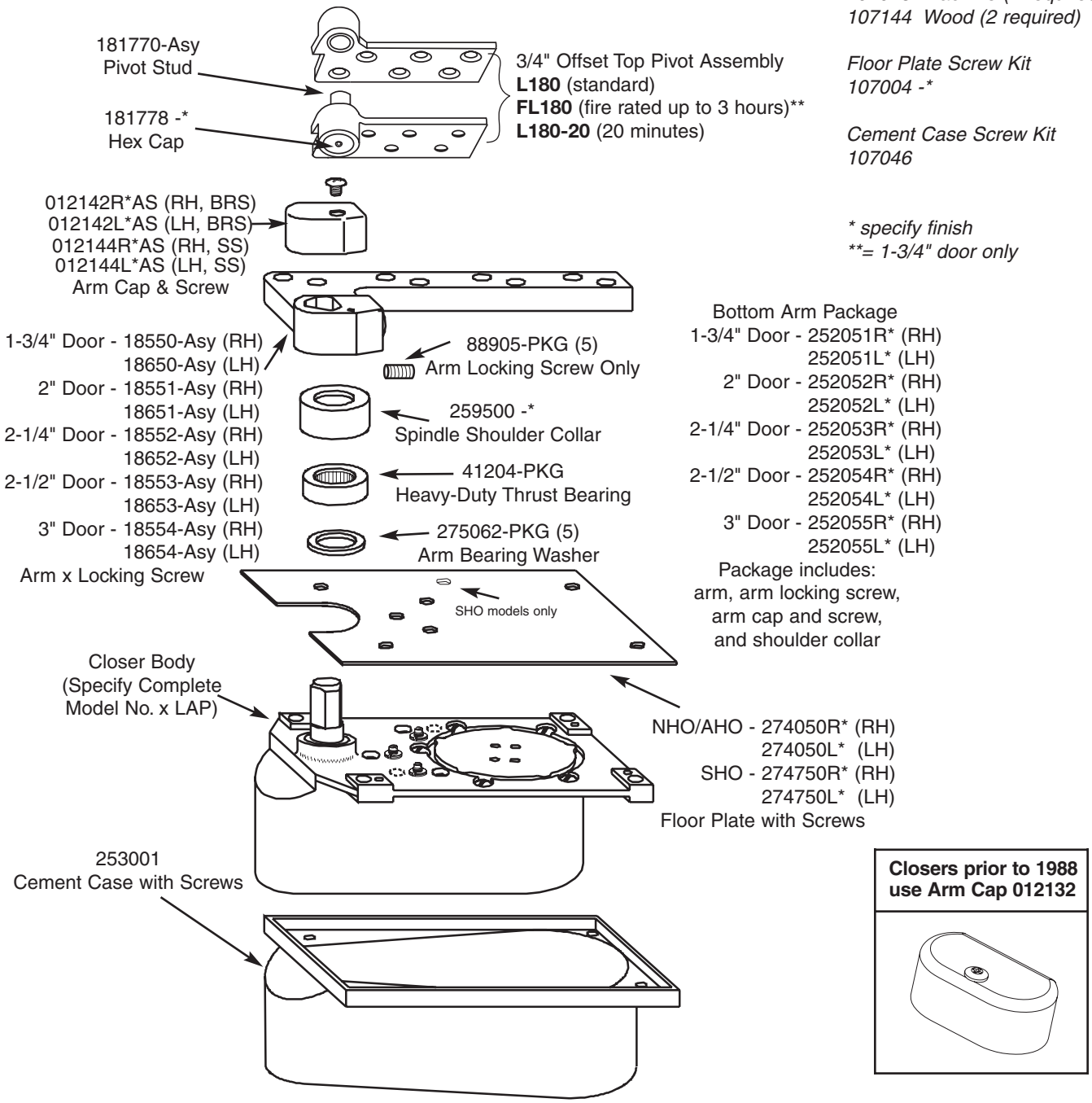

Closers prior to 1988 use Arm Cap 012132

MODEL Q27/QT27

Right Hand Shown
3/4" Offset Only

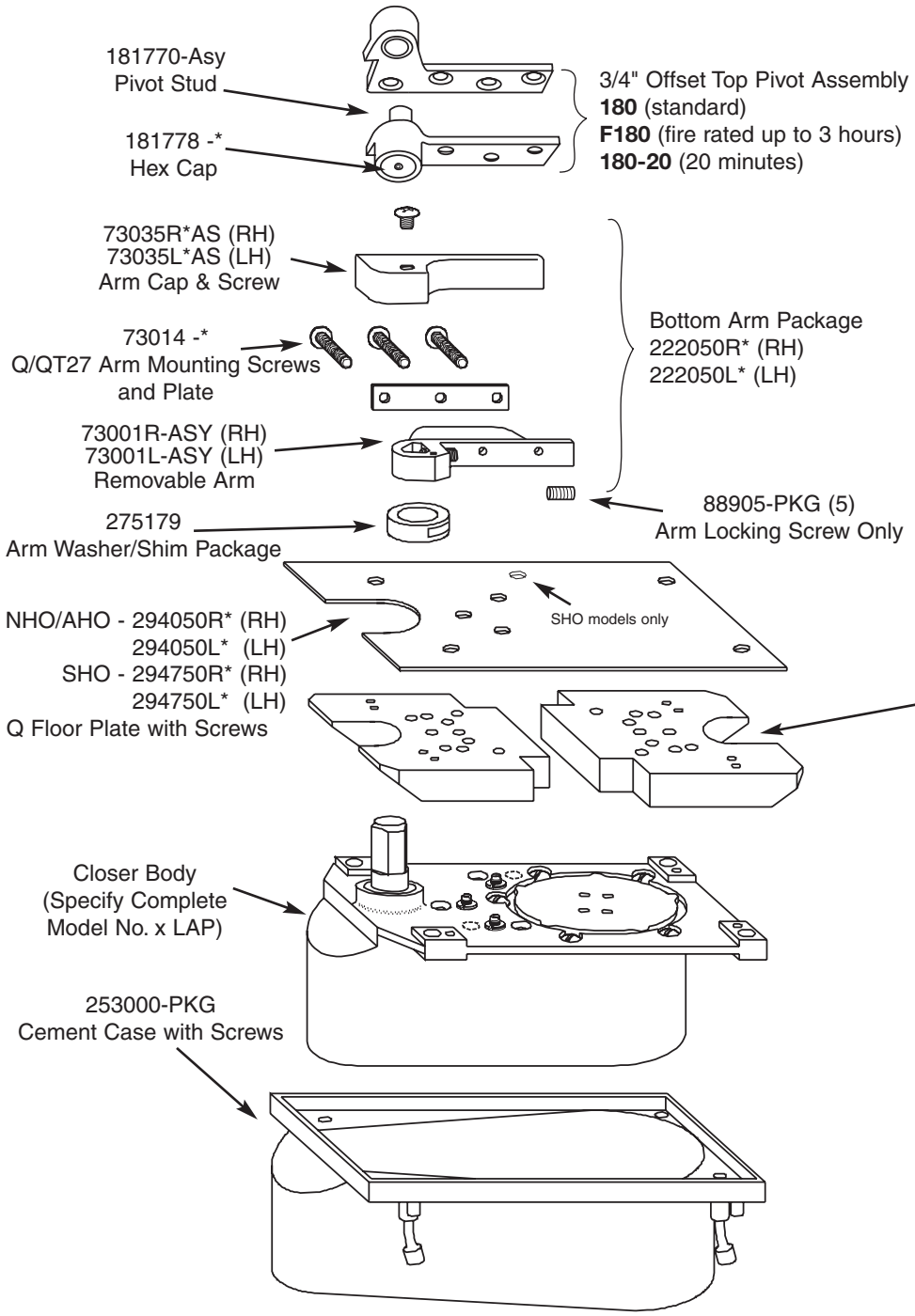

180 Screw Kit
*107014 - * Machine (2 required)*
*107114 - * Wood (2 required)*

Q Floor Plate Screw Kit
*107010 -**

Cement Case Screw Kit
107046

3/4" Offset Intermediate Pivot (1)
M19 (standard)
FM19 (fire rated up to 3 hours)
M19-20 (20 minutes)

M19 Intermediate Pivot Screw Kit
*107015 - * Machine (2 required)*
*107115 - * Wood (2 required)*

** specify finish*

MODEL HM27

Right Hand Shown
3/4" Offset Only

Floor Plate Screw Kit
*107004 -**

Cement Case Screw Kit
107046

Special Offset Hinges (3)
254545R*PK (RH)
254545L*PK (LH)

** specify finish*

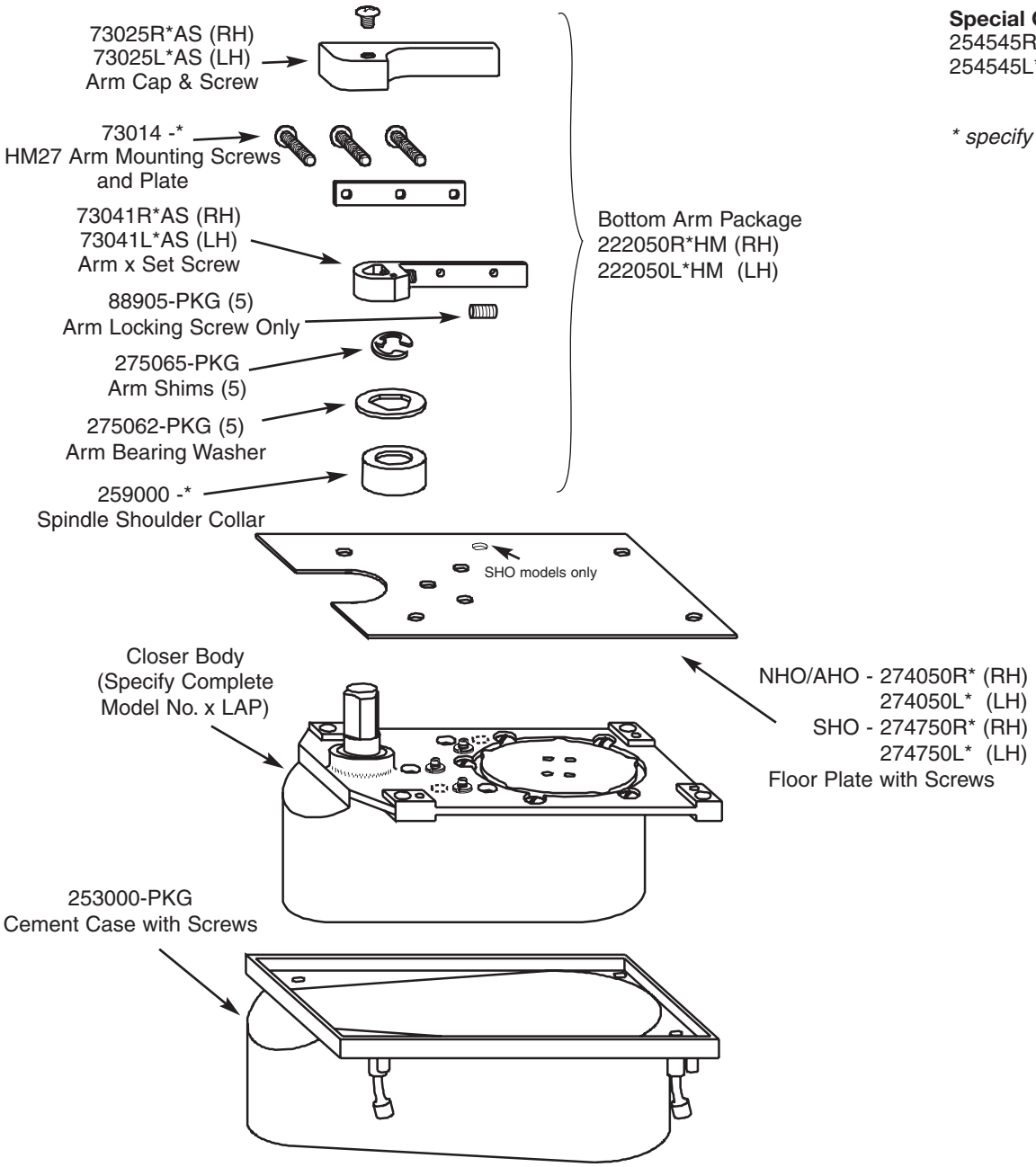

MODELS 127/427

Right Hand Shown
3/4" Offset Only

180 Screw Kit
*107014 - * Machine (2 required)*
*107114 - * Wood (2 required)*

Arm Screw Kit
107044 Machine
107144 Wood

Floor Plate Screw Kit
*107004 -**

Cement Case Screw Kit
107046

** specify finish*

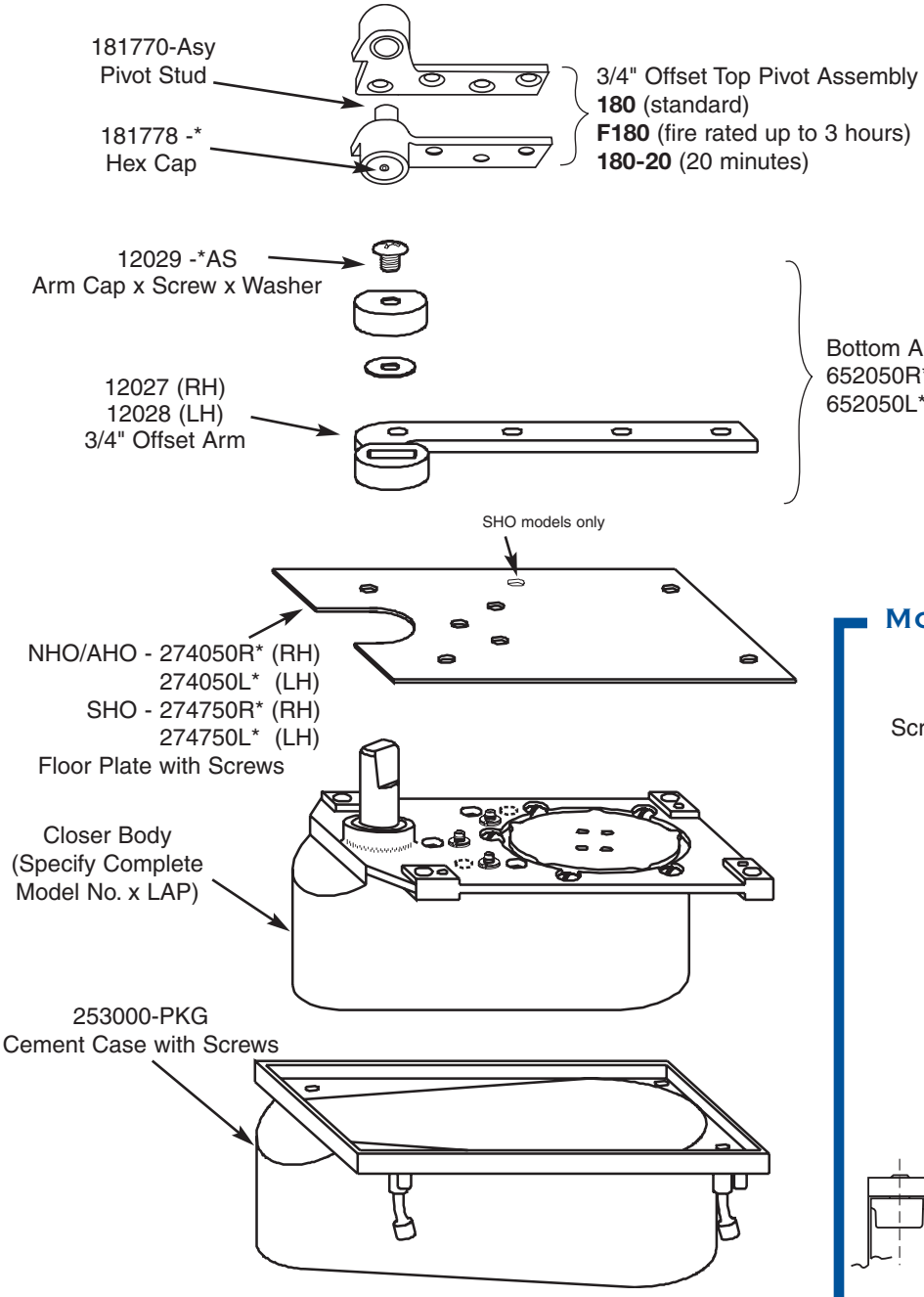

MODEL 427

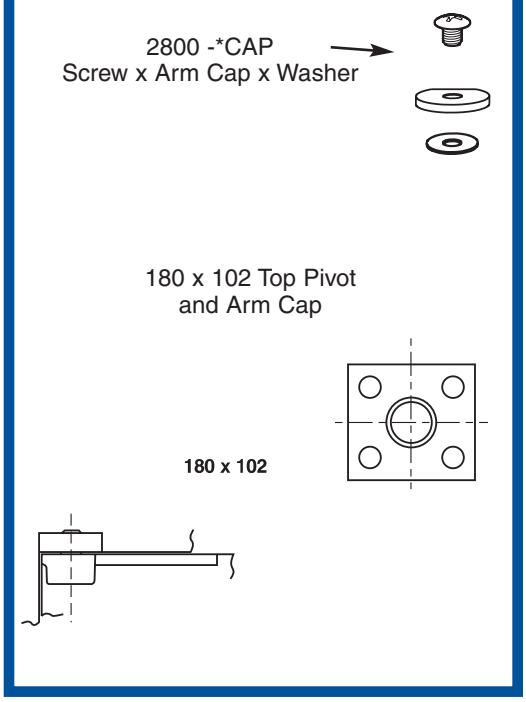

MODEL 327

Right Hand Shown
3/4" Offset Only

Floor Plate Screw Kit
*107004 -**

Cement Case Screw Kit
107046

** specify finish*

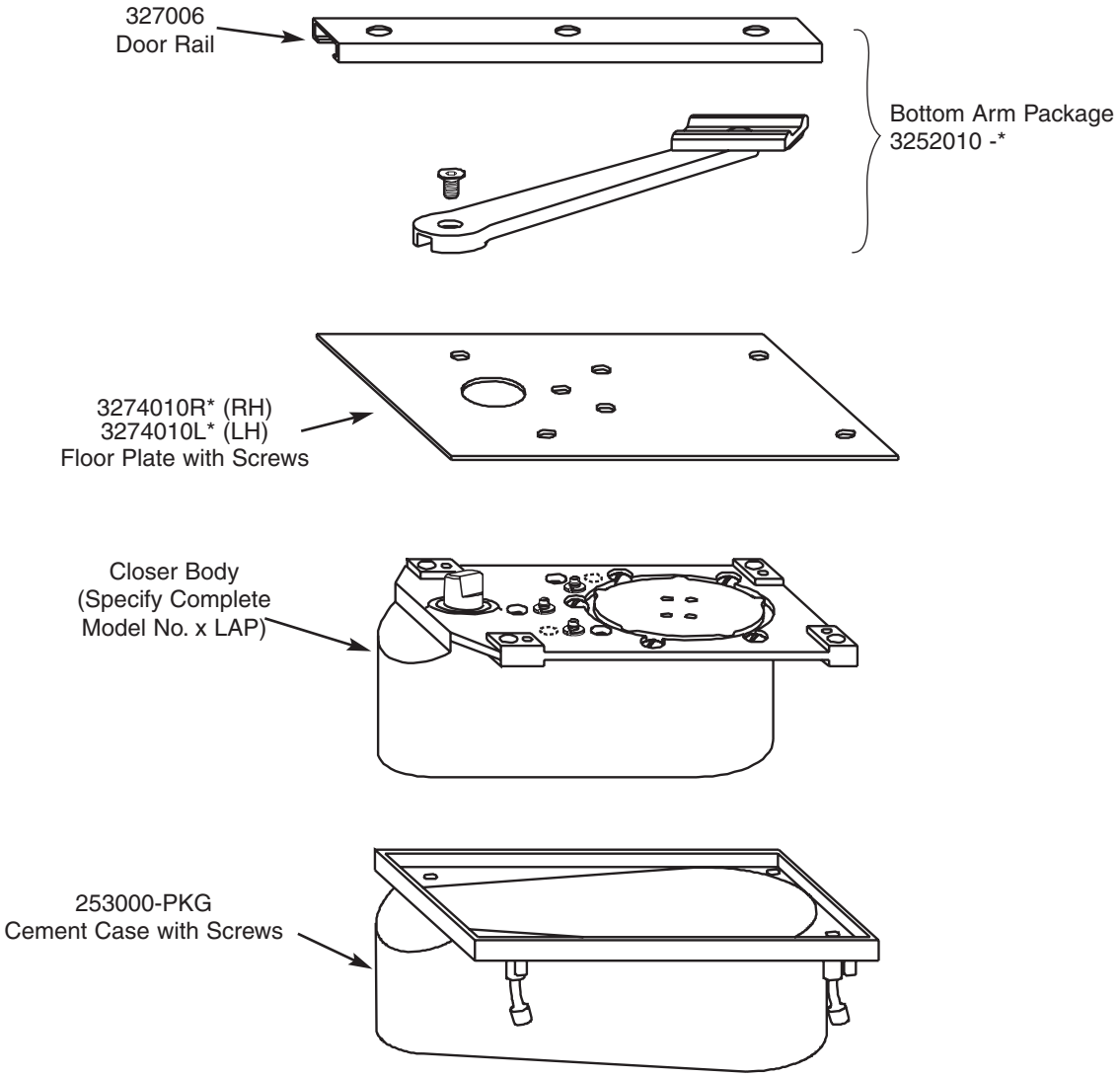

MODEL FSEC25

Right Hand Shown
3/4" Offset Only

FA180 Torx® Screw Kit
*107014 - *T Machine (2 required)*
*107114 - *T Wood (2 required)*

Arm Screw Kit
107144 Machine (2 required)
107048 Wood (2 required)

Floor Plate Screw Kit
*107021 -**

** specify finish*

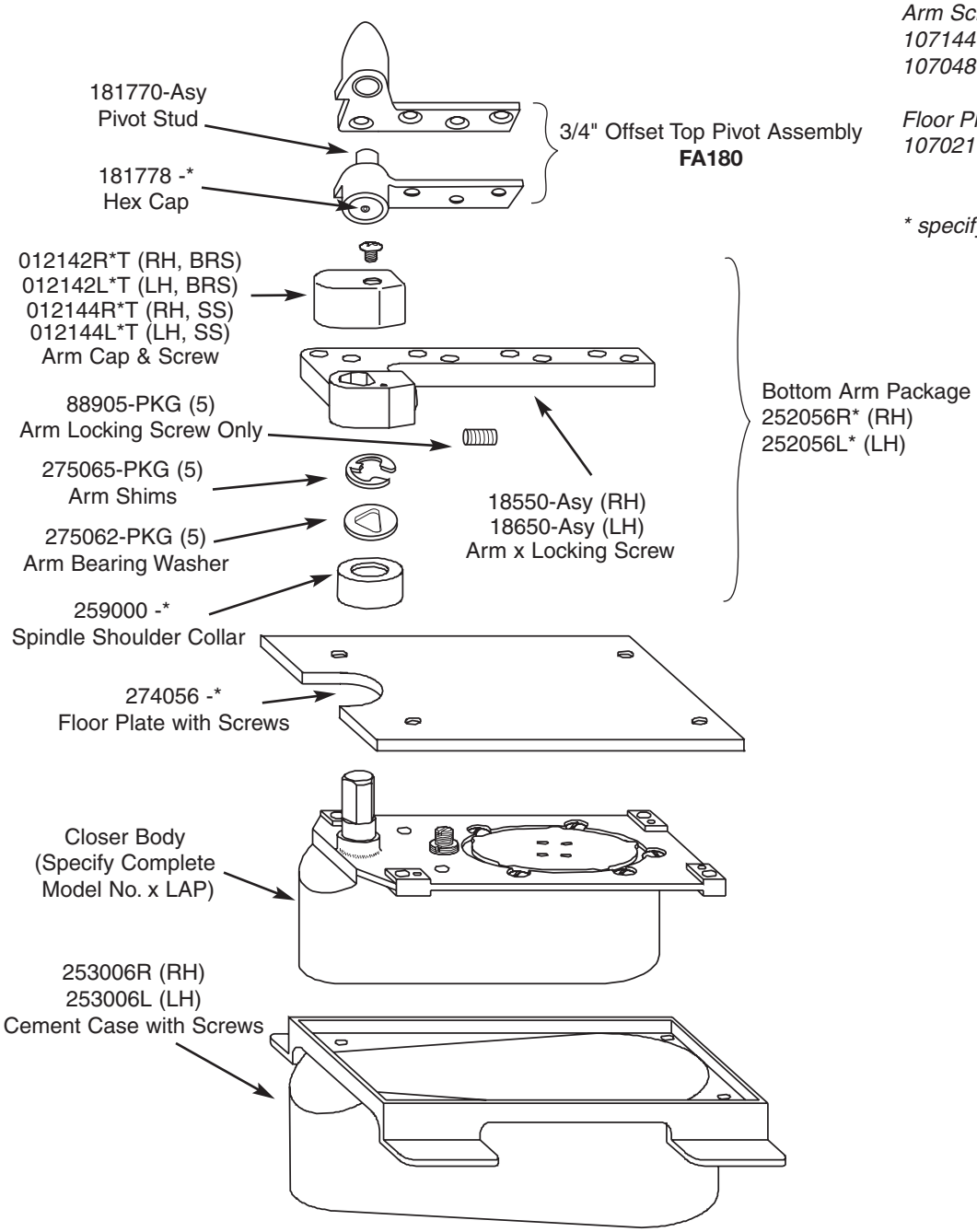

MODEL FSEC27

FA180 Torx® Screw Kit
*107014 - *T Machine (2 required)*
*107114 - *T Wood (2 required)*

Arm Screw Kit
107144 Machine (2 required)
107048 Wood (2 required)

Floor Plate Screw Kit
*107021 -**

** specify finish*

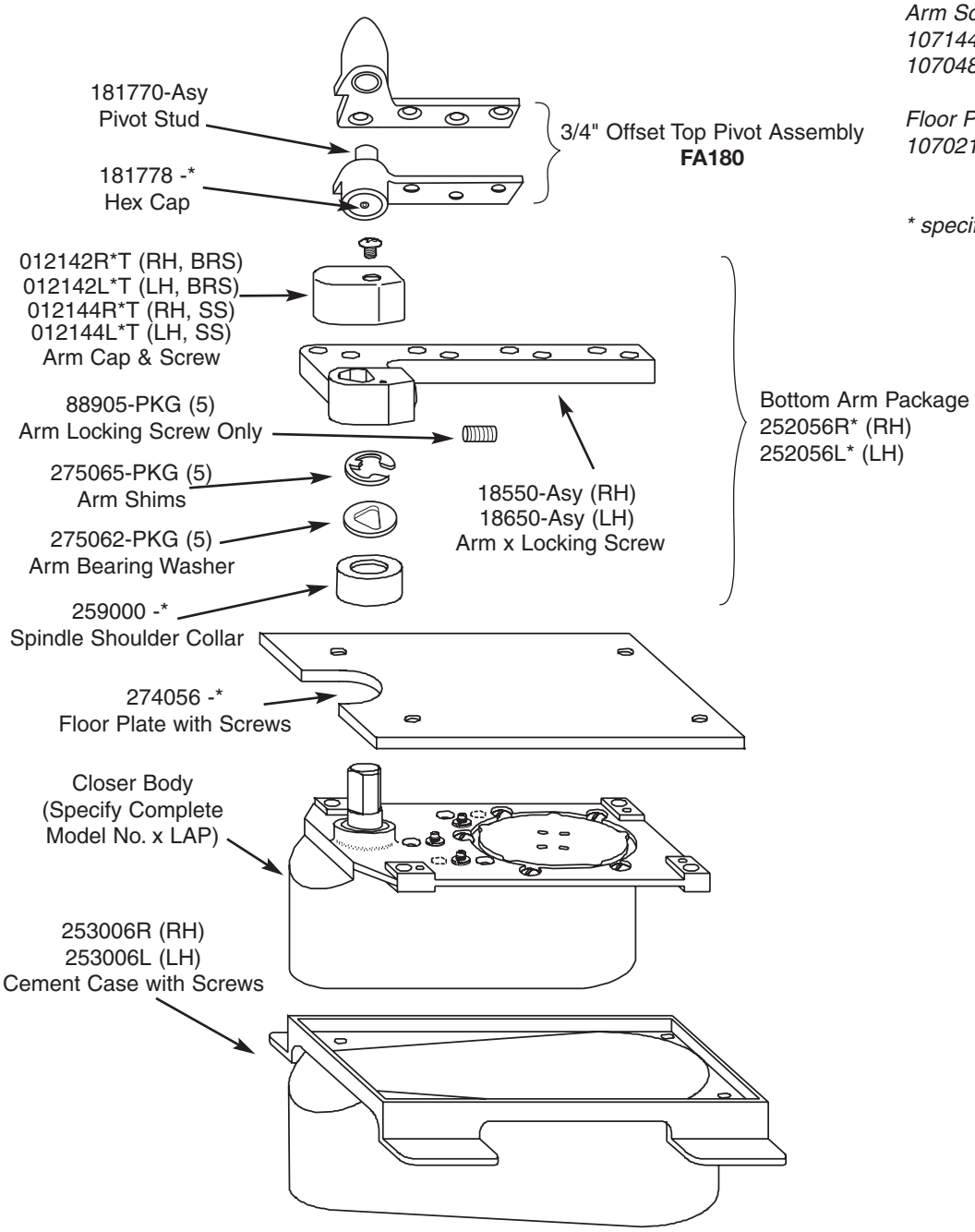

Model 21

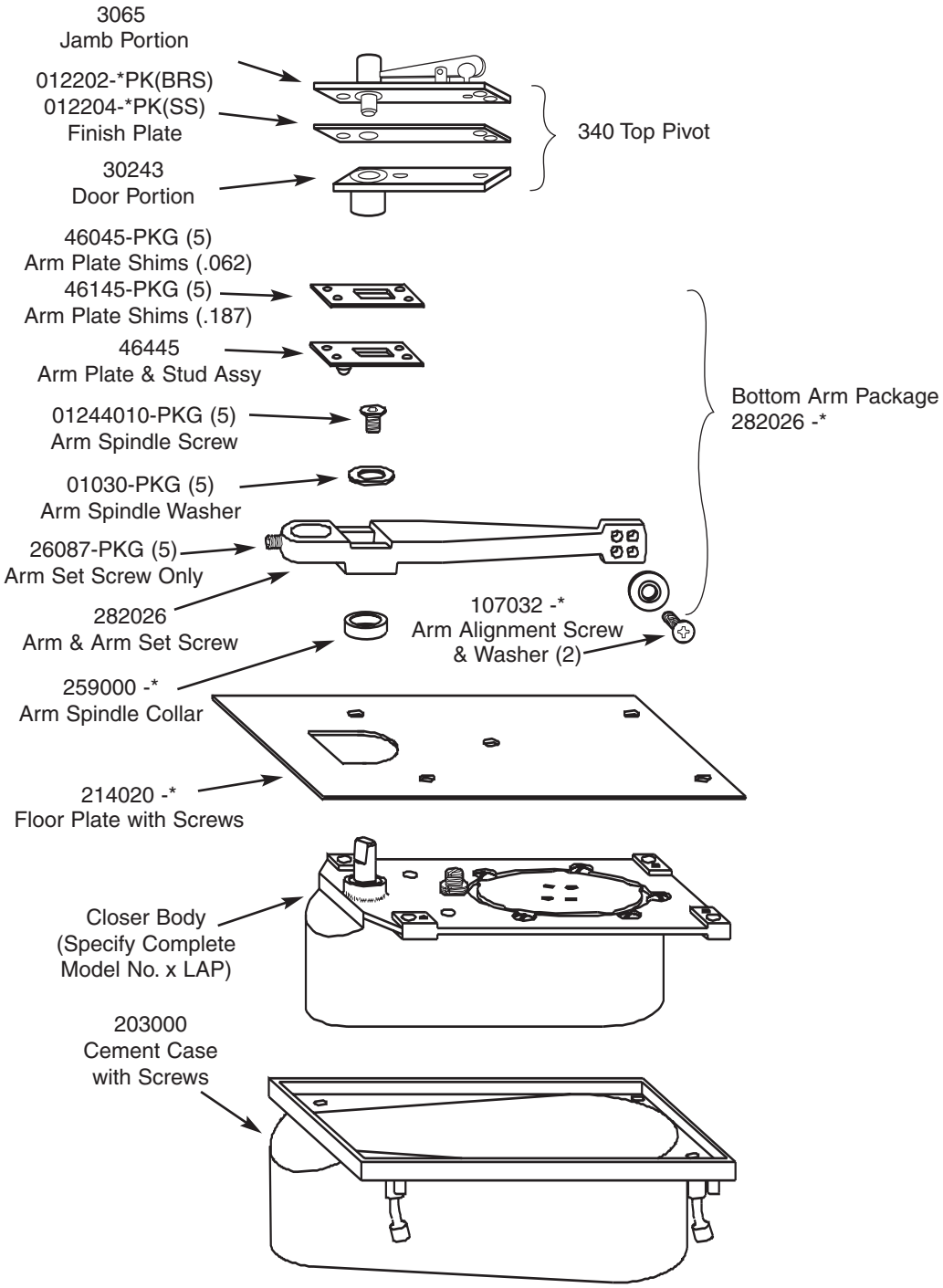

340 Screw Kit
107329 Machine & Wood

Arm Screw Kit
107048 Machine
107144 Wood

554 Arm Screw Kit
107064

Floor Plate Screw Kit
*107004 -**

Cement Case Screw Kit
107046

** specify finish*

Model 26

340 Screw Kit
107329 Machine & Wood

Arm Screw Kit
107048 Machine
107144 Wood

554 Arm Screw Kit
107064

Floor Plate Screw Kit
*107004 -**

Cement Case Screw Kit
107046

** specify finish*

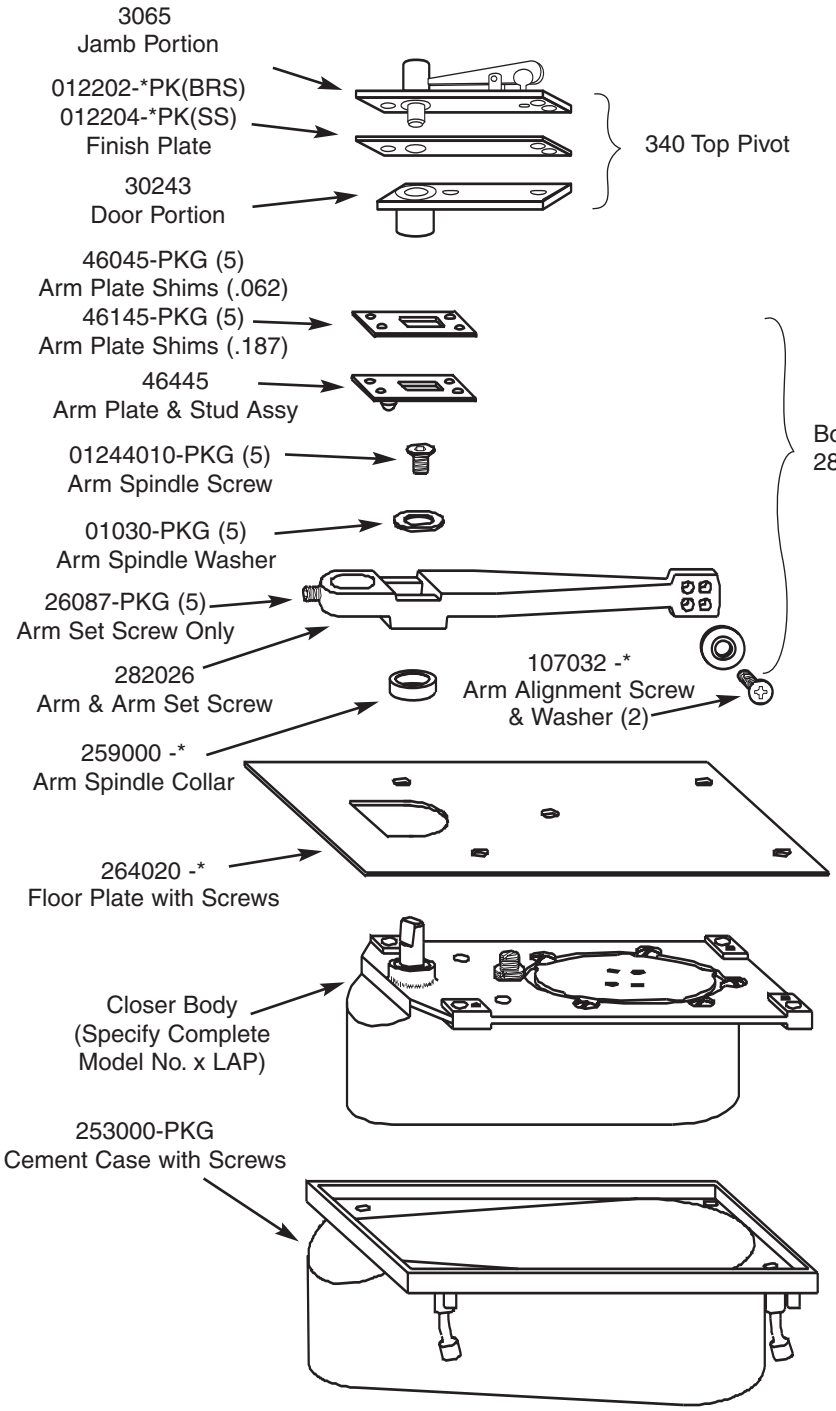

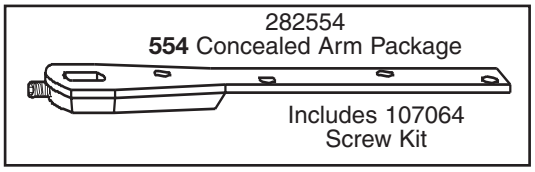

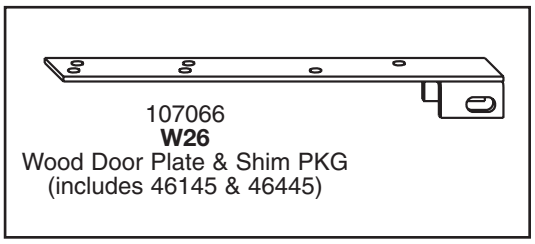

Model 28

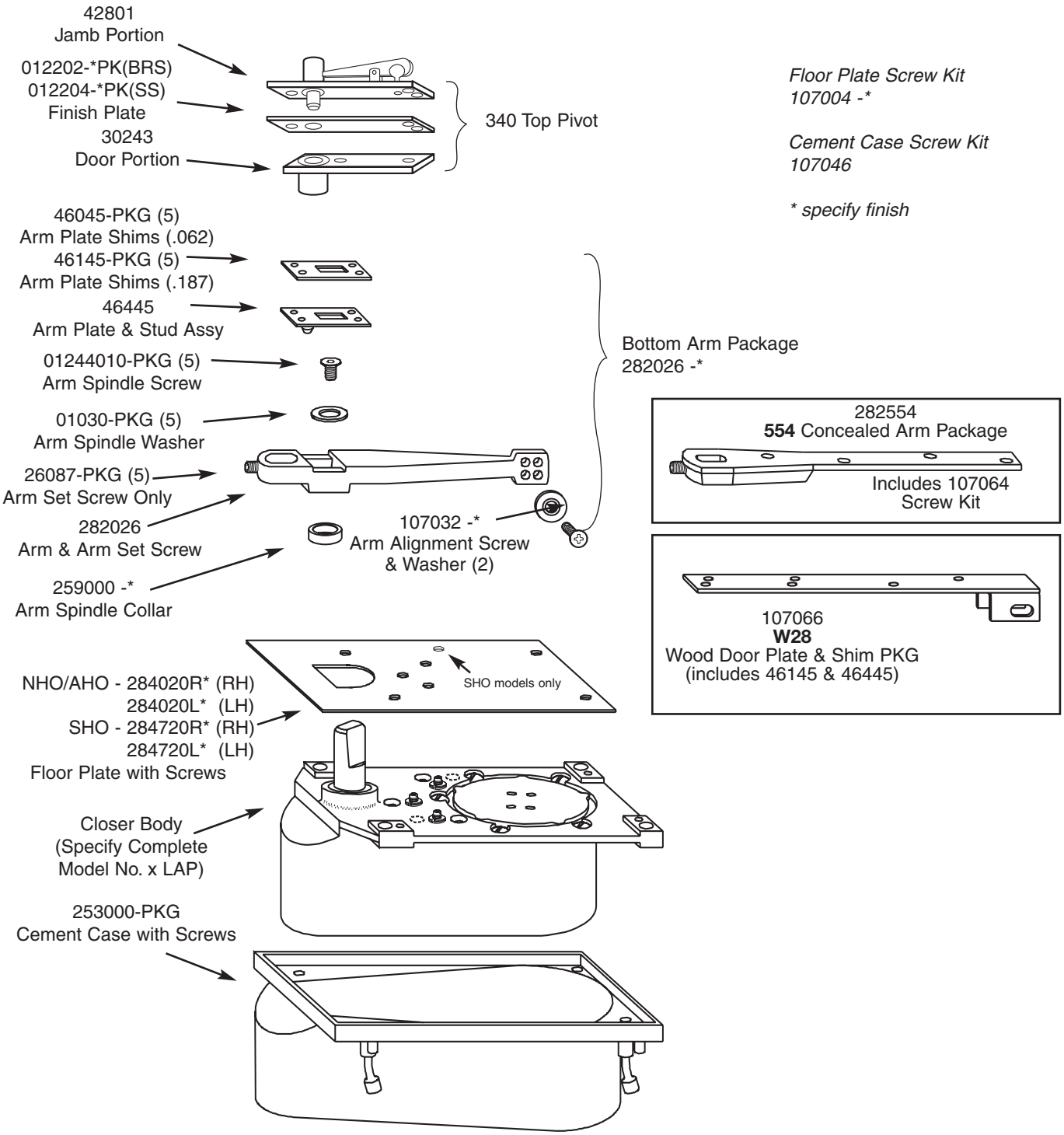
42801
Jamb Portion
012202-*PK(BRS)
012204-*PK(SS)
Finish Plate
30243
Door Portion
340 Top Pivot
Floor Plate Screw Kit
107004 -*
Cement Case Screw Kit
107046
* specify finish
46045-PKG (5)
Arm Plate Shims (.062)
46145-PKG (5)
Arm Plate Shims (.187)
46445
Arm Plate & Stud Assy
01244010-PKG (5)
Arm Spindle Screw
01030-PKG (5)
Arm Spindle Washer
26087-PKG (5)
Arm Set Screw Only
282026
Arm & Arm Set Screw
259000 -*
Arm Spindle Collar
107032 -*
Arm Alignment Screw
& Washer (2)
Bottom Arm Package
282026 -*
282554
554 Concealed Arm Package
Includes 107064
Screw Kit
107066
W28
Wood Door Plate & Shim PKG
(includes 46145 & 46445)
SHO models only
NHO/AHO - 284020R* (RH)
284020L* (LH)
SHO - 284720R* (RH)
284720L* (LH)
Floor Plate with Screws
Closer Body
(Specify Complete
Model No. x LAP)
253000-PKG
Cement Case with Screws

Parts Drawings

Model 428

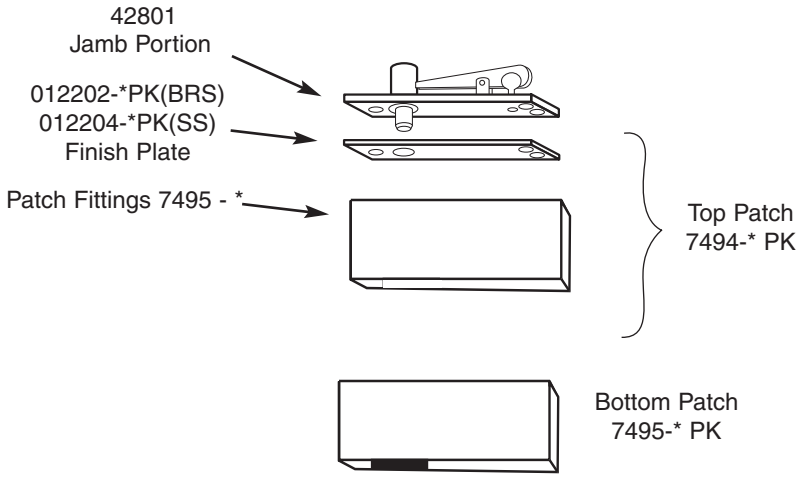

* Model 428 includes patch fittings, top pivot, cement case, closer body and floor plate shown below

Model 328

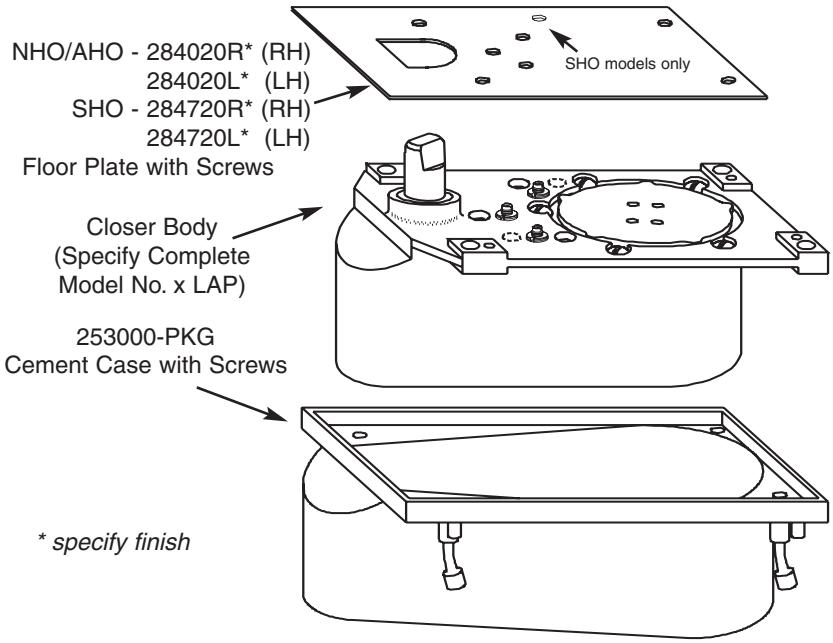

** specify finish*

Model H28

H340 Screw Kit
107329 Machine & Wood

Arm Mounting Screw Kit
107045 Machine
107145 Wood

587 Arm Screw Kit
107077 Machine
107145 Wood

Floor Plate Screw Kit
*107004 -**

Cement Case Screw Kit
107046

** specify finish*

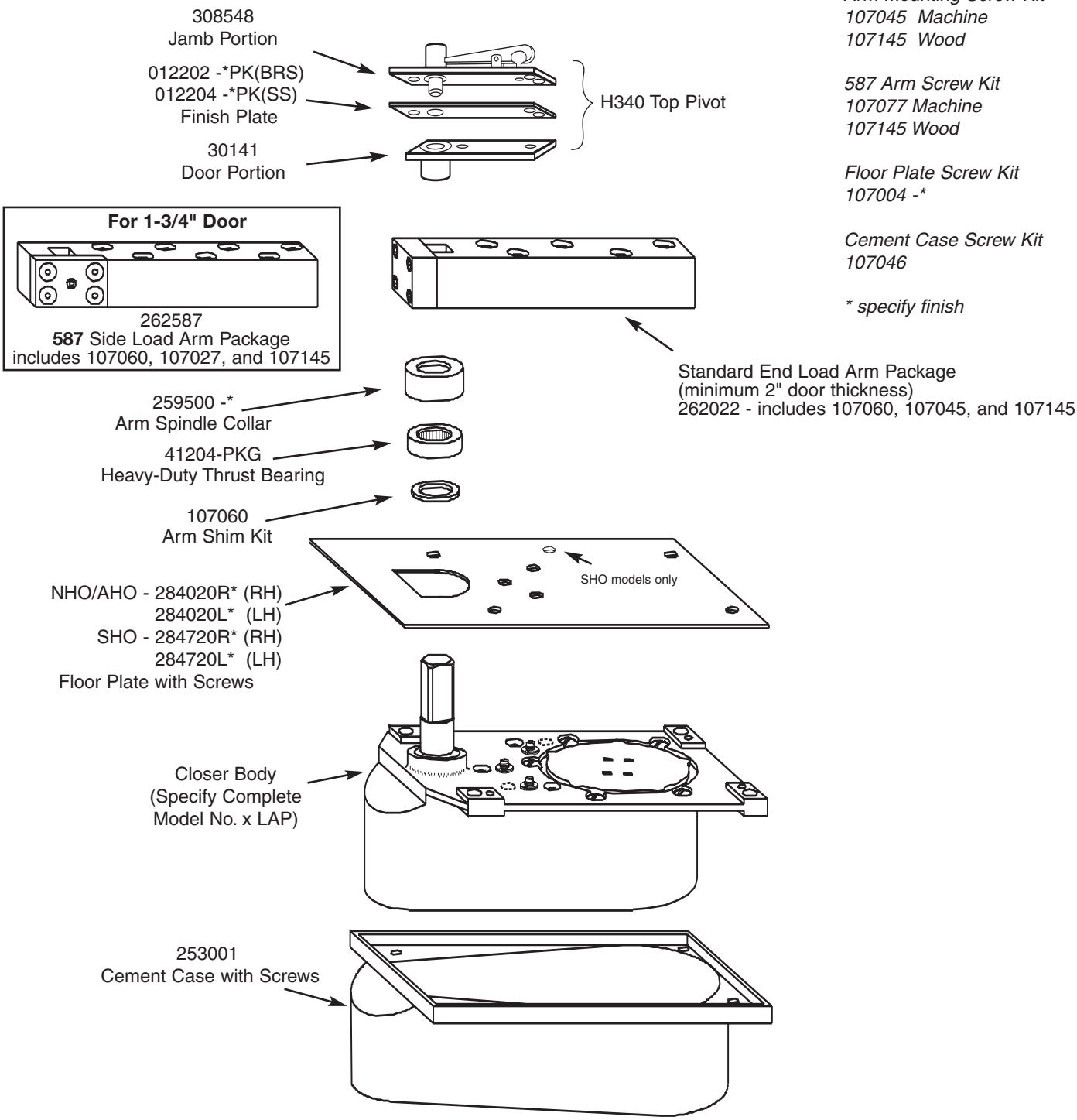

MODEL 30

340 Screw Kit
107329 Machine & Wood

Arm Screw Kit
107048 Machine
107144 Wood

Floor Plate Screw Kit
*107004 -**

Cement Case Screw Kit
107046

** specify finish*

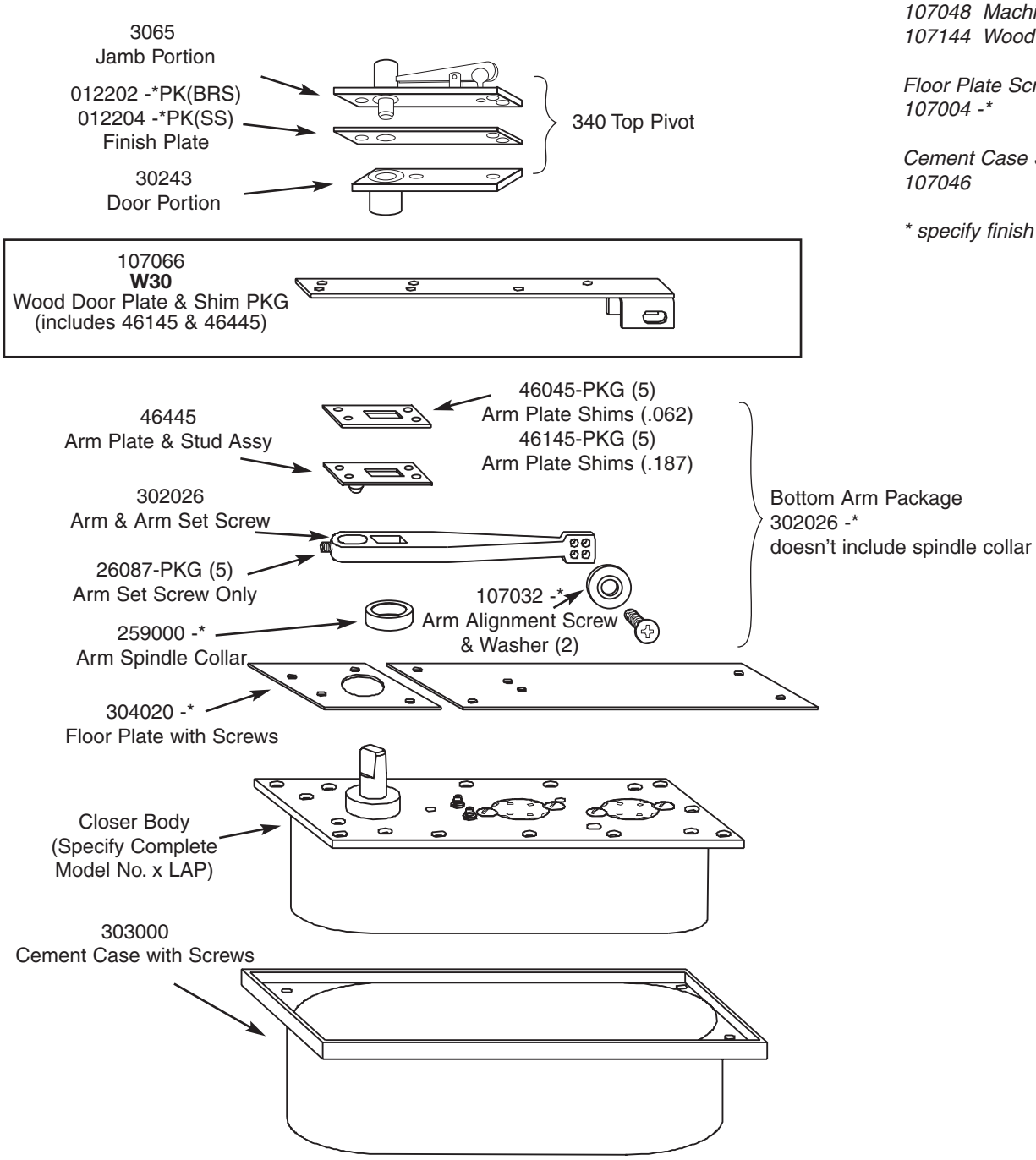

Model 40

340 Screw Kit
107329 Machine & Wood

Arm Screw Kit
107048 Machine
107144 Wood

Floor Plate Screw Kit
*107004 -**

Cement Case Screw Kit
107046

** specify finish*

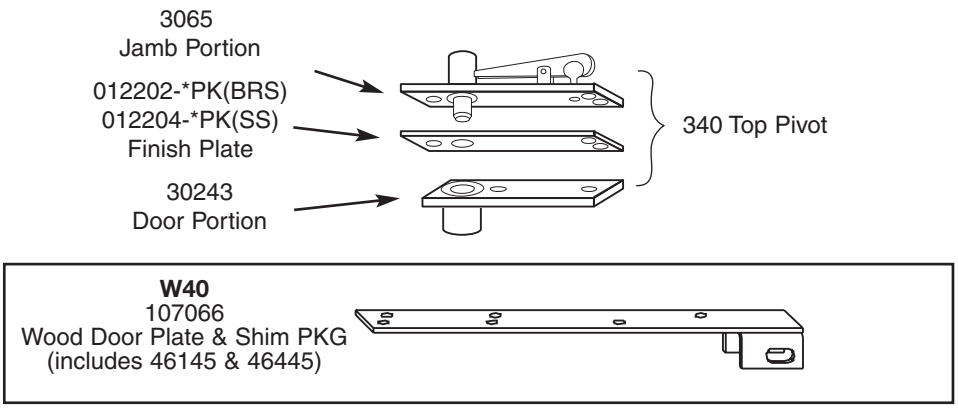

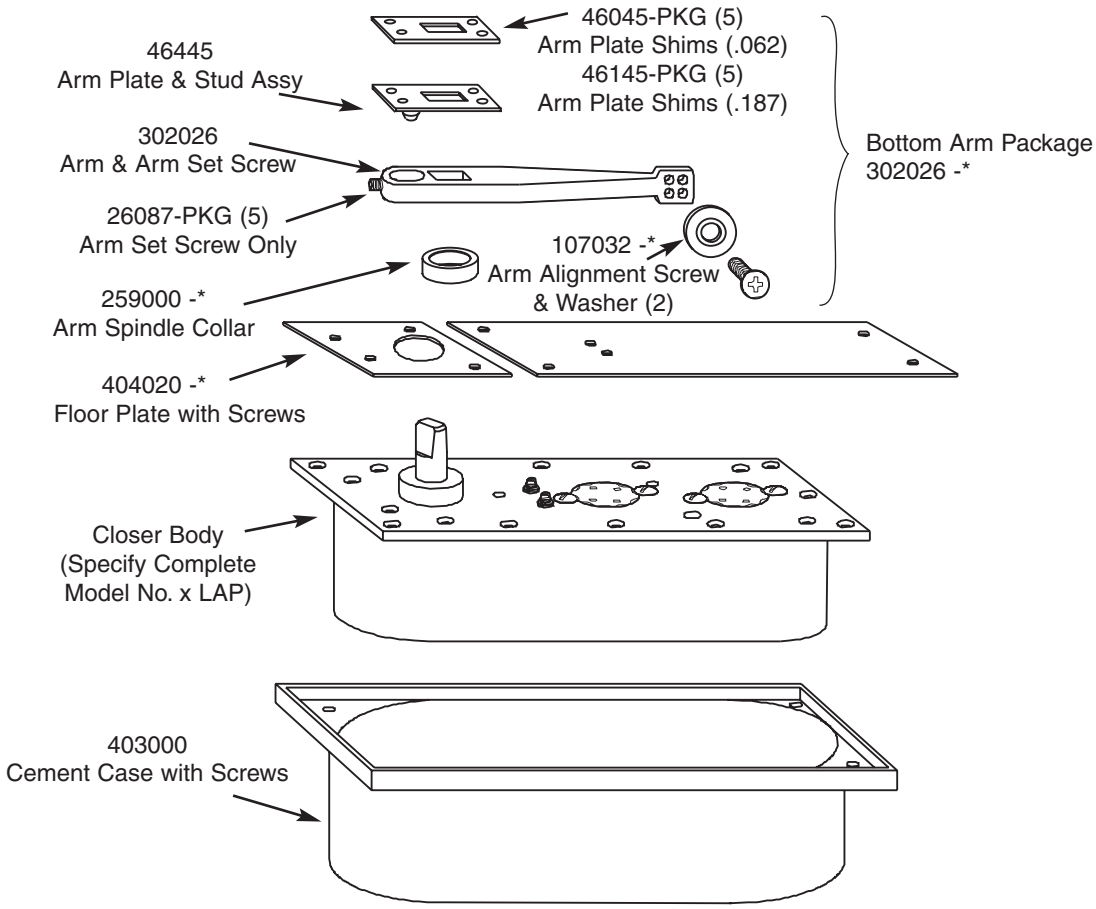

RIXSON®

Parts Drawings

Model H40

H340 Screw Kit
107329 Machine & Wood

Arm Mounting Screw Kit
107045 Machine
107145 Wood

587 Arm Screw Kit
107077 Machine
107145 Wood

Floor Plate Screw Kit
*107004 -**

Cement Case Screw Kit
107046

** specify finish*

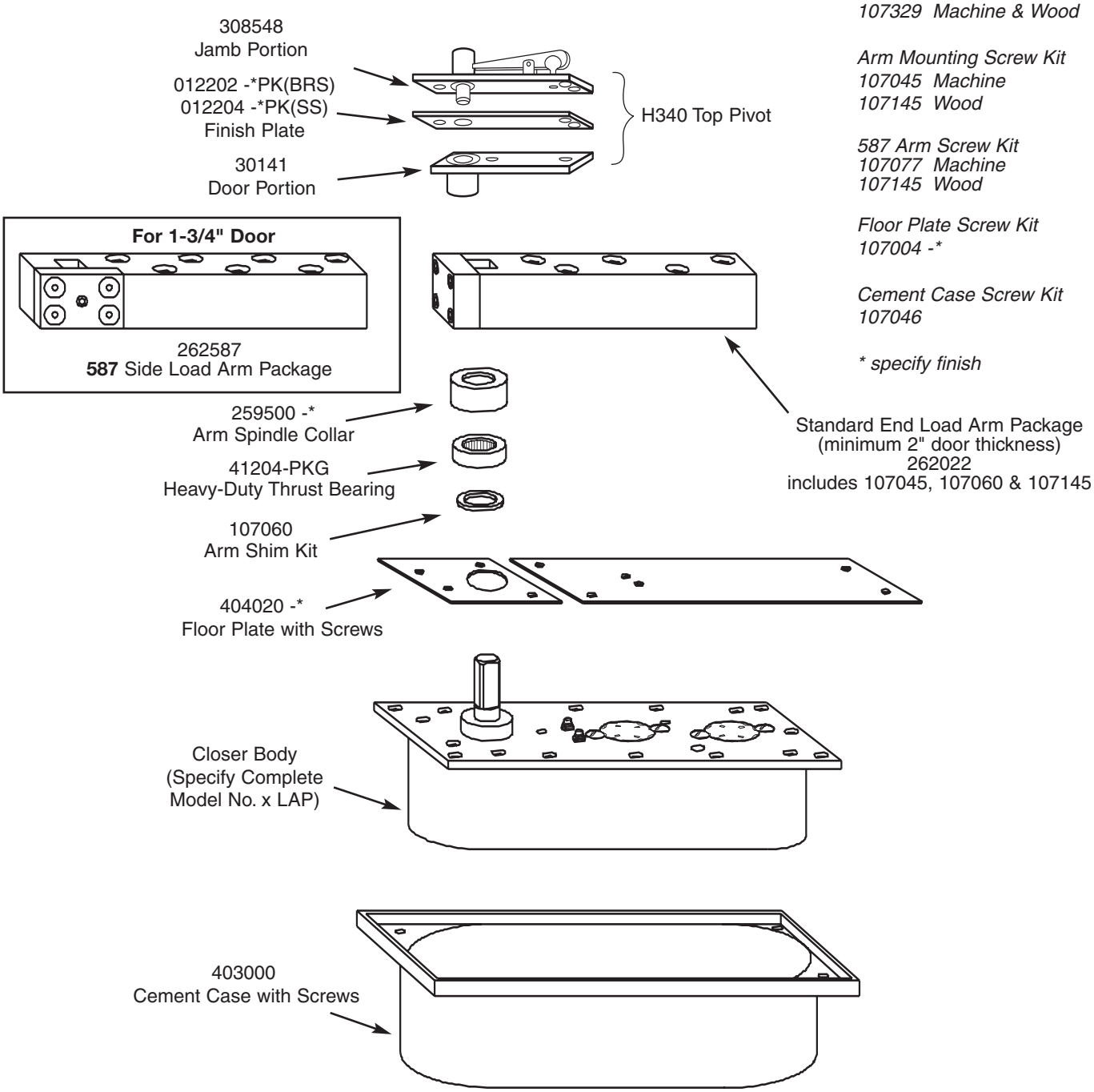

RIXSON®

Quick Reference of Options

Reference

Prefix	Model	non hold-open or Hold Open	Suffix	Handed (RH/LH)	Finish	Positive Dead Stop	Maximum Weight
F, PH	**20**	N only	Extended Spindles	yes	yes	no	200
F, PH, SC	**25**	N or 180	Ext Spdl, CWF, -20	yes	yes	no	350
F, PH, SC	**L25**	N only	Ext Spdl, CWF, -20	yes	yes	no	1250
F, PH, SC, DA	**27**	N*, A* or S*	Ext Spdl, CWF, -20	yes	yes	yes	450
F, PH, SC, DA	**H27**	N*, A* or S*	Ext Spdl, CWF, -20	yes	yes	yes	800
F, PH, SC, DA	**L27**	N*, A* or S*	Ext Spdl, CWF, -20	yes	yes	yes	1500
F, PH, SC, DA	**HM27**	N*, A* or S*	Ext Spdl, CWF	yes	yes	yes	250
F, PH, SC, DA	**27x1-1/2"**	N*, A* or S*	Ext Spdl, CWF, -20	yes	yes	yes	200
F, PH, SC, DA	**Q/QT27**	N*, A* or S*	Ext Spdl, CWF, -20	yes	yes	yes	350
F, PH, SC, DA	**127**	N*, A* or S*	Ext Spdl, CWF	yes	yes	yes	250
SC	**327**	N only	Ext Spdl	yes	yes	yes	250
PH	**427**	N*, A* or S*	Ext Spdl, CWF	yes	yes	yes	250
PH	**FSEC25**	N only	Ext Spdl	yes	yes	yes	650
PH	**FSEC27**	N only*	Ext Spdl	yes	yes	yes	650
SC, PH	**21**	N only	Ext Spdl	yes	yes	no	200
SC, PH, DA, W	**26**	N only	Ext Spdl, CWF	yes	yes	no	300
SC, PH, DA	**28**	N*, A* or S*	Ext Spdl, CWF, 554 Arm	yes	yes	yes	300
PH, SC, DA	**H28**	N*, A* or S*	Ext Spdl, CWF, 587 Arm	yes	yes	yes	1000
PH, SC, DA	**EH28**	N*, A* or S*	Ext Spdl, 587 Arm	yes	yes	yes	300
SC, PH, W	**328**	N*, A* or S*	Ext Spdl, CWF	yes	yes	yes	N/A
SC, PH, W	**428**	N*, A* or S*	Ext Spdl, CWF	yes	yes	yes	N/A
SC	**30**	N, 90A	Ext Spdl, CWF	no	yes	no	200
	40	N, 90A	Ext Spdl, CWF	no	yes	no	300
	H40	N, 90A, 100A	Ext Spdl, CWF, 587 Arm	no	yes	no	1000

*specify 85, 90, 95, 105˚

Sample

F	27	90	N	x 1/2" Ext Spdl	RH	626
prefix	model	degree	hold open or non hold-open	suffix	hand	finish

Abbreviations

CWF	Cold Weather Fluid
SC	Sealed Closer
F	Fire Rated Doors
-20	20-Minute Doors
A	Automatic Hold Open
N	non hold-open
S	Selective Hold Open
DA	Delayed Action
PH	Physically Handicapped
W	Wood Doors (center hung)
PH-8.5#	Physically Handicapped 8.5# force

Finishes

U.S. Standard	Description	BHMA Code
US3	Bright brass, clear coated	605
US4	Satin brass, clear coated	606
US9	Bright bronze, clear coated	611
US10	Satin bronze, clear coated	612
US10B	Satin oxidized bronze, oil rubbed	613
US26	Bright chrome plated	625
US26D	Satin chrome plated	626

Common Abbreviations

LAP	Less All Parts
LFP	Less Floor Plate
LCC	Less Cement Case
LTP	Less Top Pivot