RIXSON®

Pivots & Pivot Sets

Maximum, Maintenance-Free Support for Medium and Heavy Doors

Introduction

Pivot sets provide the best possible means of hanging a door. They are designed to work with the laws of physics to provide long-lasting performance and reliability.

The weight of the door is supported entirely by the bottom arm, which is directly connected to the pivot spindle. This hanging means provides several important advantages:

- Fasteners on the door and frame are in shear rather than tension (as with hinges) and are less likely to pull out over time. This creates less stress on the frame assembly, prevents door sagging and allows the door to swing with less resistance from friction.
- A door supported in this manner relies on the strength of the floor to carry the weight, not the frame. This allows extremely heavy doors to be hung in an opening and allows door adjustment throughout the life of the building to compensate for settlement.

Contents

Page

Pivots & Pivot Sets: General Information **118**
How to Select Product 119
Features & Specification 120
3/4" Offset Hung Pivot Sets 121-124
1-1/2" Offset Hung Pivot Sets 125-126
Offset Hung Top Pivots 127-130
Intermediate or Side Jamb Offset Hung Pivots 131-133
Electric and Security Pivots 134
Center Hung Pivot Sets 135-136
Center Hung Top Pivots 137-138
Electric, Security & Specialty Pivots 139
Special Applications 140
Parts Drawings **141-147**
Quick Reference of Options **148**

1. Offset vs. Center Hung Application

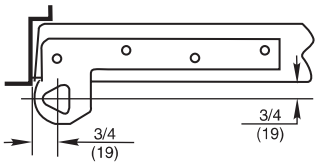

3/4" Offset
Pivot point located 3/4" from the heel edge of the door and 3/4" from face of door.

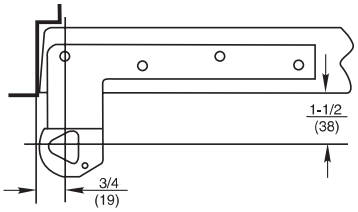

1-1/2" Offset
Pivot point located 3/4" from the heel edge of the door and 1-1/2" from face of door.

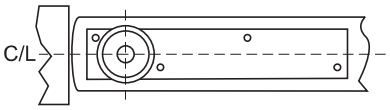

Center Hung
Pivot point centered in thickness of door.

2. Size of Door (width, height, thickness)

Door Material	Door Thickness				
	1-3/8"	**1-3/4"**	**2"**	**2-1/4"**	**2-1/2"**
	Weight-per-square-foot (in pounds):				
Aluminum		3-1/2			
Ash	4-1/2	5-1/4	6	6-3/4	7-1/2
Birch	3-3/4	4-1/2	5	5-3/4	6-1/4
Hollow Metal	6-1/2	6-1/2		6-1/2	
Oak	6	7	8	9	10
Pine	3	3-1/2	4	4-1/4	5
Lead Lining	**Lead Thickness**				
	1/64"	**1/16"**	**1/8"**	**1/4"**	
	Weight-per-square-foot (in pounds):				
	1	3-3/4	7-1/2	13-3/4	
Tempered Glass	**Glass Thickness**				
		3/8"	**1/2"**	**3/4"**	
	Weight-per-square-foot (in pounds):				
		5	8	9-3/4	
Marble/Granite Cladding	**Thickness**				
				*** 3/4"**	
	Weight-per-square-foot (in pounds):				
				10-1/2	

Example: A two-inch-thick birch door has a square foot weight of five pounds. If the door has standard dimensions of 3'(width) x 7'(height), this equals 21 square feet. So, 5 pounds x 21 square feet = 105 pounds total weight.

*Consult factory for sizes greater than 3/4"

3. Expected Frequency of Door Operation

Application	Daily	Yearly	
Large department store entrance	5,000	1,500,000	
Large office building entrance	4,000	1,200,000	
Theater entrance	1,000	450,000	
School entrance	1,250	225,000	High
School restroom door	1,250	225,000	
Store or bank entrance	500	150,000	
Office building restroom door	400	118,000	
School corridor door	80	15,000	
Office building corridor door	75	22,000	Average
Store restroom door	60	18,000	
Residential entrance door	40	15,000	
Residential restroom door	25	9,000	
Residential hallway door	10	3,600	Low
Residential closet door	6	2,200	

Rixson® pivots and pivot sets are recommended for high-traffic interior or exterior doors, or any door where appearance is an important consideration. They are especially useful for extra-heavy or lead- lined doors.

AESTHETICS

- Offset or center hung pivot sets are more attractive than alternative door hanging devices.
- Full floor-to-ceiling concealment is offered for center hung doors providing almost unlimited design flexibility.
- Extended spindles available to raise door above finished floor for complete concealment.
- Specification of heavy panels for door face with standard offset pivot preparation is available.
- Doors up to 1,750 pounds are accommodated, allowing all standard and heavy doors in a building to be hung by same hanging means.

EXCLUSIVE RIXSON FEATURES

- Many special layouts are available for unique applications.
- Shim packages to accommodate building settling
- Heavyweight pivots have extra thrust bearing to eliminate door and frame wear.

PERFORMANCE

- Full weight of door is borne by floor pivot, providing long pivot life and trouble-free operation.
- Screws are in shear in pivot-set installations and are less likely to pull out from tension–eliminates sagging doors.
- Vertical adjustment provides for field modifications to suit conditions.

SAFETY & SECURITY

- Models are available for labeled fire and lead-lined doors.
- Doors cannot be removed by vandals.
- Virtually concealed, pivots are not abuse or vandal prone.
- All offset pivots shall be UL10C compliant.

ECONOMY

- Pivots provide longer life and more trouble-free operation than other door hanging means.
- Door and frame life is lengthened.

147 Pivot Set with M19 Intermediate Pivot

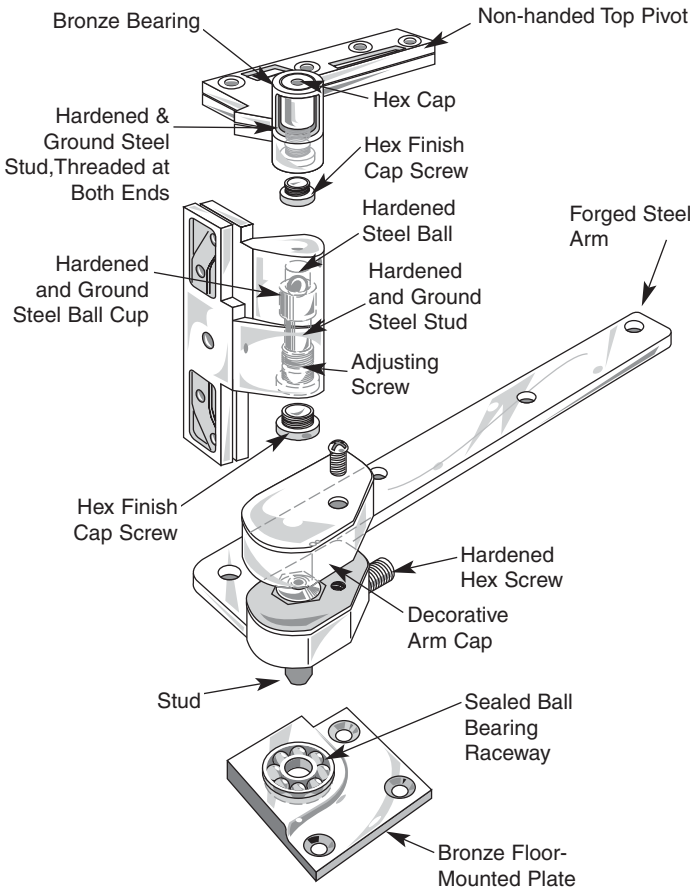

SUGGESTED SPECIFICATION

All pivots and/or pivot sets shall be the product of one manufacturer. Sets as noted in hardware groups shall be matching in design for both labeled fire doors, lead-lined doors and regular doors. Pivots for 20-minute fire doors shall be non-ferrous and match the finish of adjacent hardware. All pivot sets are required to meet ANSI grade one standard as listed in ANSI 156.4. Caps shall be hex type to increase security.

Model 117-1/4

Application
Interior Doors
Weight to 250 lbs.*
Door Width up to 3'6"(1067mm)
Handed

BHMA/ANSI NO: C07172

* Door size & weight guidelines are determined using the appropriate number of intermediate pivots

Product Description & Features
- Standard top pivot 180 included
- 119 (order separately); see page 131
- Bottom pivot mortised into side jamb
- Doors over 60"(1524mm) require the use of one intermediate pivot. Every additional 30"(762mm) of door height warrants another intermediate pivot
- 3/4"(19mm) offset (measured from centerline of pivot to face of door)
- Door edges must be beveled 1/8" in 2"
- Weight of door borne by floor
- Furnished with wood and machine screws
- Extended spindles available in 1/2"(13mm) increments up to 2"(51mm)
- Not available for fire-rated doors
- Doors will swing 180°, trim permitting

(Click here to view template)

Technical Information

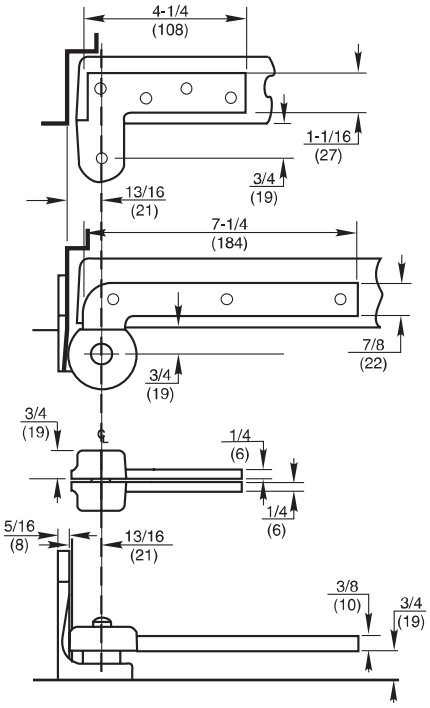

Model 117

Application
Interior Doors
Weight to 300 lbs.*
Door Width up to 3'6"(1067mm)
Handed

BHMA/ANSI NO: C07162/C07202

* Door size & weight guidelines are determined using the appropriate number of intermediate pivots

Product Description & Features
- Standard top pivot 180 included
- 119 (order separately); see page 131
- Bottom pivot mortised into floor
- Available for fire door assemblies up to three hours–specify F117. Intermediate pivot required by UL. Specify FM19, (order separately), see page 131
- For 20-minute label suffix –20
- Doors over 60"(1524mm) require the use of one intermediate pivot. Every additional 30"(762mm) of door height warrants another intermediate pivot
- 3/4"(19mm) offset (measured from centerline of pivot to face of door)
- Door edges must be beveled 1/8" in 2"
- Furnished with wood and machine screws
- Extended spindles available in 1/2"(13mm) increments up to 2"(51mm)
- Doors will swing 180°, trim permitting

(Click here to view template)

Technical Information

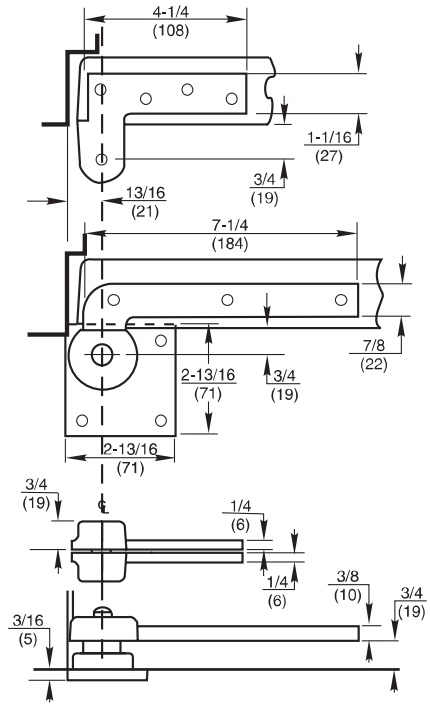

Model 195

Application
Exterior or Interior Doors
Weight to 450 lbs.*
Door Width up to 4'0"(1219mm)
Handed

BHMA/ANSI NO: C07131

* Door size & weight guidelines are determined using the appropriate number of intermediate pivots

Product Description & Features
- Standard top pivot 180 included
- M19 (order separately), see page 131
- Bottom pivot mortised into side jamb
- Pivot set can be vertically adjusted up to 3/16"(5mm) after installation
- Doors over 60"(1524mm) require the use of one intermediate pivot. Every additional 30"(762mm) of door height warrants another intermediate pivot
- Not available for fire-rated doors
- 3/4"(19mm) offset (measured from centerline of pivot to face of door)
- Door edges must be beveled 1/8" in 2"
- Weight of door is borne by floor portion
- Furnished with wood and machine screws
- Extended spindles available in 1/2"(13mm) increments up to 2"(51mm)
- Doors will swing 180°, trim permitting

(Click here to view template)

Technical Information

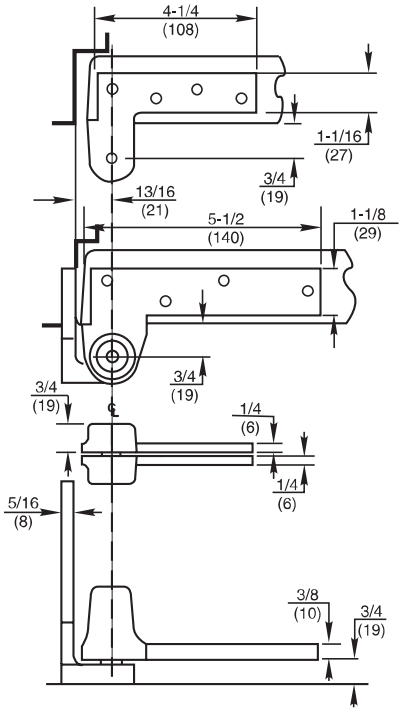

Model 147

Application
Exterior or Interior Doors
Weight to 600 lbs.*
Exterior Door Width up to 3'0"(914mm)
Interior Door Width up to 3'6"(1067mm)
Handed

BHMA/ANSI NO: C07162

* Door size & weight guidelines are determined using the appropriate number of intermediate pivots

Product Description & Features
- Standard top pivot 180 included
- M19 (order separately), see page 131
- Bottom pivot mounts directly to floor
- Uses same arm and cap as 27 floor closer
- Available for fire door assemblies up to three hours (ferrous material)–specify F147. Intermediate pivot required by UL. Specify FM19 (order separately), see page 131
- For 20-minute label suffix –20
- Non-ferrous base metal
- Doors over 60"(1524mm) require the use of one intermediate pivot. Every additional 30"(762mm) of door height warrants another intermediate pivot
- 3/4"(19mm) offset (measured from centerline of pivot to face of door)
- Door edges must be beveled 1/8" in 2"
- Furnished with wood and machine screws
- Extended spindles available in 1/2"(13mm) increments up to 2"(51mm)
- Doors will swing 180°, trim permitting

(Click here to view template)

Technical Information

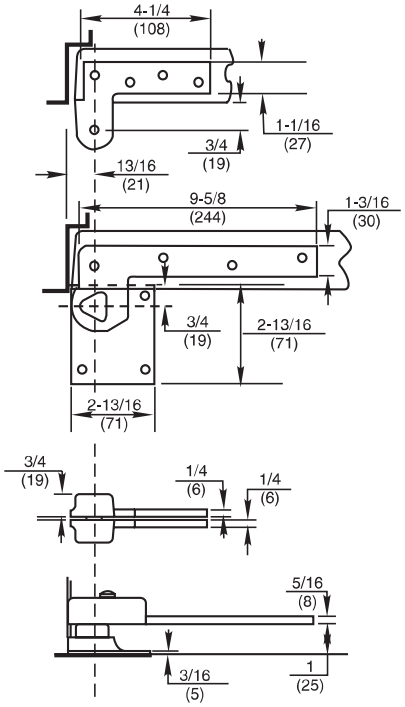

Pivots & Pivot Sets

Model H147

Application
Exterior or Interior Doors
Weight to 800 lbs.
Door Width up to 3'6"(1067mm)
Handed

BHMA/ANSI NO: C07162 (modified)

(Click here to view template)

* Door size & weight guidelines are determined using the appropriate number of intermediate pivots

Product Description & Features

- Standard top pivot H180 included
- M190 (order separately), see page 131
- Bottom pivot mounts directly to floor
- Available for fire door assemblies up to three hours for 1-3/4"(44mm) doors only –specify FH147. Intermediate pivot required by UL. Specify FM19 (order separately), see page 131
- For 20-minute label suffix –20
- Designed to accommodate narrow dense doors where traffic is moderate
- Bottom pivot features roller bearing for greater load capacity
- Doors over 60"(1524mm) require the use of one intermediate pivot. Every additional 30"(762mm) of door height warrants another intermediate pivot
- 3/4"(19mm) offset (measured from centerline of pivot to face of door)
- Door edges must be beveled 1/8" in 2"
- Furnished with wood and machine screws
- Extended spindles available in 1/2"(13mm) increments up to 2"(51mm)
- Doors will swing 180°, trim permitting

Technical Information

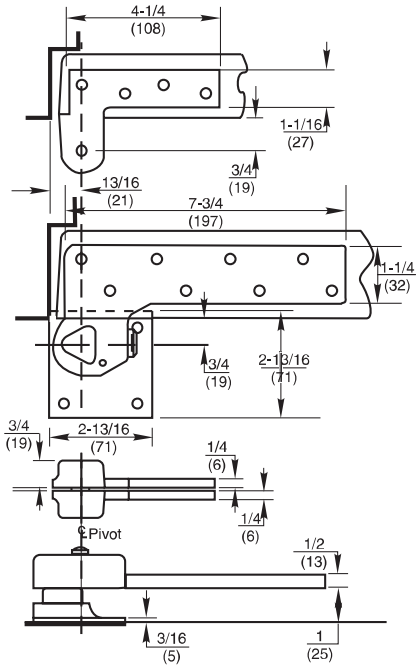

Model L147

Application
Exterior or Interior Doors
Lead-Lined/Heavy/High Traffic Doors
Weight to 1000 lbs.
Door Width up to 3'6"(1067mm)
Handed

BHMA/ANSI NO: C07162

(Click here to view template)

* Door size & weight guidelines are determined using the appropriate number of intermediate pivots

Product Description & Features

- Standard top pivot L180 included
- ML19 (order separately), see page 132
- Bottom pivot mounts directly to floor
- Designed for lead-lined doors with lead in center of door
- Screw holes in top pivot and bottom arm designed to straddle lead lining
- Available for fire door assemblies up to three hours for 1-3/4"(44mm) doors only (ferrous material)–specify FL147. Intermediate pivot required by UL. Specify FML19 (order separately), see page 132
- For 20-minute label suffix –20
- Available to accommodate lead in door thicknesses 1-3/4"(44mm), 2"(51mm), 2-1/4"(57mm), 2-1/2"(64mm), or 3"(76mm) – specify when ordering
- Non-ferrous base metal
- Doors over 60"(1524mm) require the use of one intermediate pivot. Every additional 30"(762mm) of door height warrants another intermediate pivot
- 3/4"(19mm) offset (measured from centerline of pivot to face of door)
- Door edges must be beveled 1/8" in 2"
- Furnished with wood and machine screws
- Extended spindles available in 1/2"(13mm) increments up to 2"(51mm)
- Doors will swing 180°, trim permitting

Technical Information

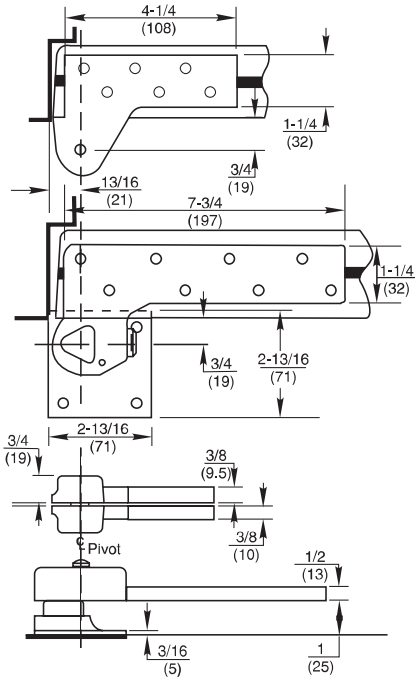

1-3/4 door shown

Model 117-1/2

Application
Exterior or Interior Doors
Weight to 650 lbs.*
Door Width up to 4'0"(1219mm)
Handed

BHMA/ANSI NO: C07121

(Click here to view template)

* Door size & weight guidelines are determined using the appropriate number of intermediate pivots

Product Description & Features
- Standard top pivot 180 included
- M19 (order separately), see page 131
- Bottom pivot mortised into floor
- Available for fire door assemblies up to three hours (ferrous material)–specify F117-1/2. Intermediate pivot required by UL. Specify FM19 (order separately), see page 131
- For 20-minute label suffix –20
- Non-ferrous base metal
- Doors over 60"(1524mm) require the use of one intermediate pivot. Every additional 30"(762mm) of door height warrants another intermediate pivot
- 3/4"(19mm) offset (measured from centerline of pivot to face of door)
- Door edges must be beveled 1/8" in 2"
- Furnished with wood and machine screws
- Extended spindles available in 1/2"(13mm) increments up to 2"(51mm)
- Doors will swing 180°, trim permitting

Technical Information

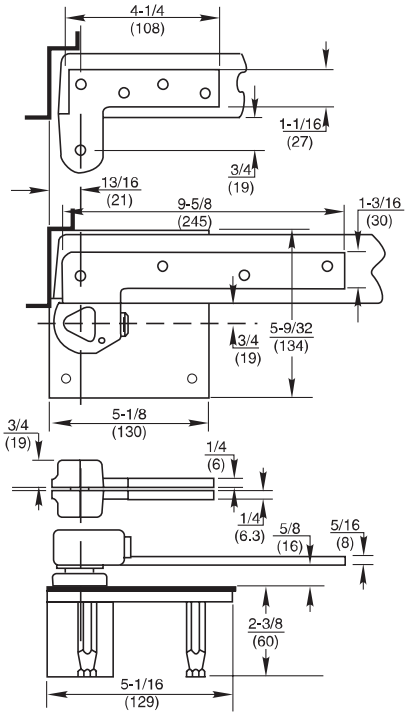

Model L117

Application
Exterior or Interior Doors
Lead-Lined/Heavy/High Traffic Doors
Weight to 1,750 lbs.*
Door Width up to 4'0"(1219mm)
Handed

BHMA/ANSI NO: C07111

(Click here to view template)

* Door size & weight guidelines are determined using the appropriate number of intermediate pivots

Product Description & Features
- Standard top pivot L180 included
- ML19 (order separately), see page 132
- Bottom pivot mortised into floor
- Designed for lead-lined doors with lead in center of door
- Screw holes in top pivot and bottom arm designed to straddle lead lining
- Available for fire door assemblies up to three hours for 1-3/4"(44mm) doors only–specify FL117. Intermediate pivot required by UL. Specify FML19 (order separately), see page 132
- For 20-minute label suffix –20
- Available to accommodate lead in door thicknesses 1-3/4"(44mm), 2"(51mm), 2-1/4"(57mm), 2-1/2"(64mm), or 3"(76mm) – specify when ordering
- Doors over 60"(1524mm) require the use of one intermediate pivot. Every additional 30"(762mm) of door height warrants another intermediate pivot
- 3/4"(19mm) offset (measured from centerline of pivot to face of door)
- Door edges must be beveled 1/8"(3mm) in 2"
- Furnished with wood and machine screws
- Extended spindles available in 1/2"(13mm) increments up to 2"(51mm)
- Doors will swing 180°, trim permitting

Technical Information

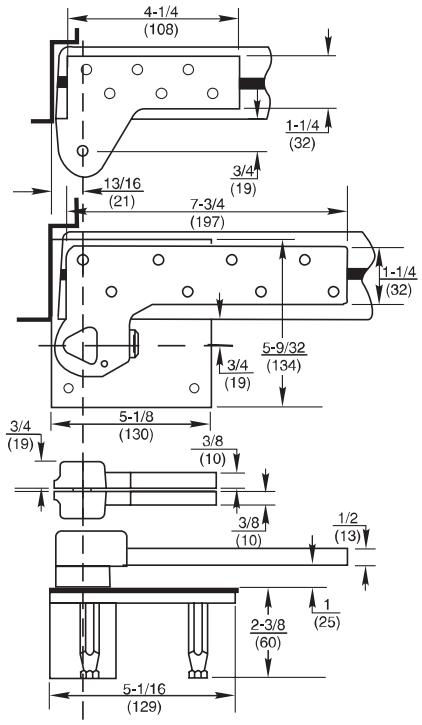

Pivot for 1-3/4 door shown

Model 117 x 1-1/2"

Application
Interior Doors
Weight to 150 lbs.*
Door Width up to 3'6"(1067mm)
Handed

BHMA/ANSI NO: C07162

* Door size & weight guidelines are determined using the appropriate number of intermediate pivots

Product Description & Features
- Standard top pivot 180x1-1/2" included
- Intermediate pivot required: M19x1-1/2" (order separately), see page 132
- Bottom pivot mortised into floor
- Available for fire door assemblies up to three hours–specify F117x1-1/2" Intermediate pivot required by UL. Specify FM19x1-1/2" (order separately) see page 132
- For 20-minute label suffix –20
- Doors over 60"(1524mm) require the use of one intermediate pivot. Every additional 30"(762mm) of door height warrants another intermediate pivot
- 1-1/2"(38mm) offset (measured from centerline of pivot to face of door)
- Door edges must be beveled 1/8" in 2"
- Furnished with wood and machine screws
- Extended spindles available in 1/2"(13mm) increments up to 2"(51mm)
- Doors will swing 180°, trim permitting

(Click here to view template)

Technical Information

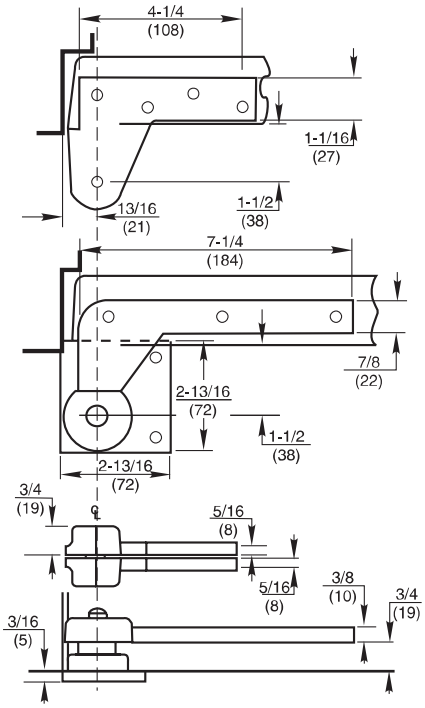

Model 147 x 1-1/2"

Application
Exterior or Interior Doors
Weight to 350 lbs.
Exterior door width up to 3'0"(914mm)
Interior door width up to 3'6"(1067mm)
Handed

BHMA/ANSI NO: C07162

* Door size & weight guidelines are determined using the appropriate number of intermediate pivots

Product Description & Features
- Standard top pivot 180x1-1/2" included
- Intermediate pivot required: M19x1-1/2" (order separately), see page 132
- Bottom pivot mounts directly to floor
- Uses same arm and cap as 27 floor closer
- Available for fire door assemblies up to three hours–specify F147x1-1/2" Intermediate pivot required by UL Specify FM19x1-1/2"(order separately), see page 132
- For 20-minute label suffix –20
- Doors over 60"(1524mm) require the use of one intermediate pivot. Every additional 30"(762mm) of door height warrants another intermediate pivot
- 1-1/2"(38mm) offset (measured from centerline of pivot to face of door)
- Door edges must be beveled 1/8" in 2"
- Furnished with wood and machine screws
- Extended spindles available in 1/2"(13mm) increments up to 2"(51mm)
- Doors will swing 180°, trim permitting

(Click here to view template)

Technical Information

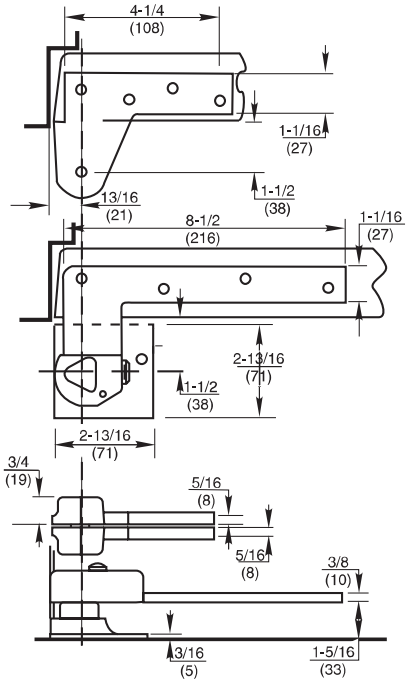

Model 117-1/2 x 1-1/2"

Application
Exterior or Interior Doors
Weight to 450 lbs.*
Door Width up to 4'0"(1219mm)
Handed

BHMA/ANSI NO: C07121 (modified)

Product Description & Features
- Standard top pivot 180x1-1/2" included
- M19x1-1/2"(order separately), see page 132
- Bottom pivot mortised into floor
- Available for fire door assemblies up to three hours–specify F117-1/2 x 1-1/2" Intermediate pivot required by UL Specify FM19 x 1-1/2"(order separately), see page 132
- For 20-minute label suffix –20
- Doors over 60"(1524mm) require the use of one intermediate pivot. Every additional 30"(762mm) of door height warrants another intermediate pivot
- 1-1/2"(38mm) offset (measured from centerline of pivot to face of door)
- Door edges must be beveled 1/8"(3mm) in 2"(51mm)
- Furnished with wood and machine screws
- Extended spindles available in 1/2"(13mm) increments up to 2"(51mm)
- Doors will swing 180°, trim permitting

(Click here to view template)

Technical Information

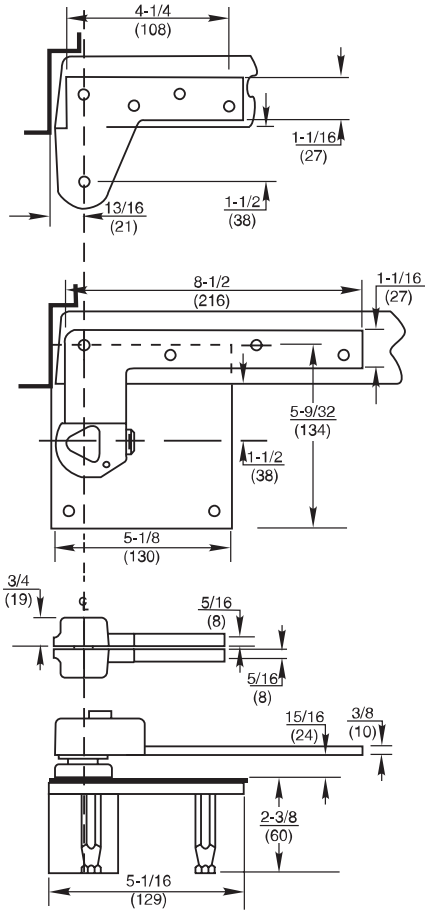

* Door size & weight guidelines are determined using the appropriate number of intermediate pivots

Special Layout 438

Application
Exterior or Interior Doors
Weight to 500 lbs.*
Door Width up to 4'0"(1219mm)
Handed

Product Description & Features
- For use on doors with 3/4" cladding
- For cladding greater than 3/4", contact technical support
- Available with L147, L117 pivot sets
- Specify ML19 x SPLO 438 (order separately)

(Click here to view template)

Technical Information

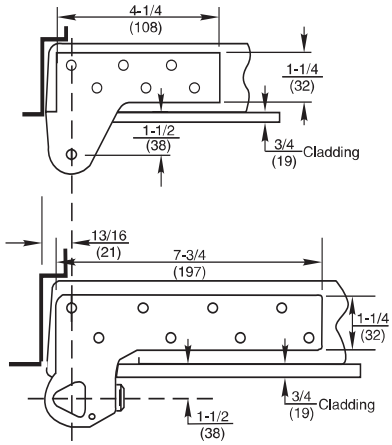

* Door size & weight guidelines are determined using the appropriate number of intermediate pivots

MODEL 180

Application
Full Mortise
Non-handed

Product Description & Features
- Standard top pivot for most offset pivot sets and floor closers
- Available for fire door assemblies (ferrous material)–specify F180
- For 20-minute label suffix –20
- Oil-impregnated sintered bronze bearing
- Non-ferrous base metal
- 3/4"(19mm) offset (measured from centerline of pivot to face of door)
- Available with longer than standard pivot pins. Increments are 1/4"(6mm), 1/2"(13mm), 3/4"(19mm) only
- Furnished with wood and machine screws

Technical Information

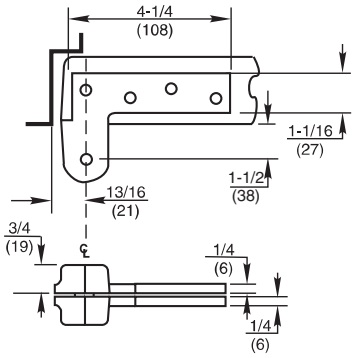

(Click here to view template)

MODEL 180 x 1-1/2"

Application
Full Mortise
Non-handed

Product Description & Features
- Standard top pivot for most 1-1/2" offset pivot sets and floor closers
- Available for fire door assemblies (ferrous material)–specify F180–1-1/2" offset
- For 20-minute label suffix –20
- Oil-impregnated sintered bronze bearing
- Non-ferrous base metal
- 1-1/2"(38mm) offset (measured from centerline of pivot to face of door)
- Available with longer than standard pivot pins. Increments are 1/4"(6mm), 1/2"(13mm), 3/4"(19mm) only
- Furnished with wood and machine screws

Technical Information

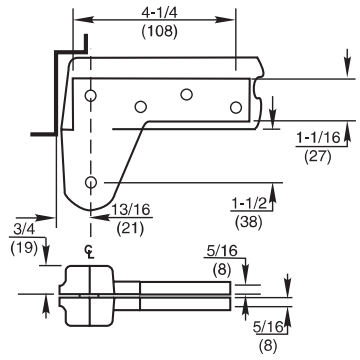

(Click here to view template)

MODEL H180

Application
Full Mortise, Heavy-Duty
Non-handed

Product Description & Features
- Standard top pivot for heavy-duty offset pivot sets
- Available for fire door assemblies (ferrous material)–specify FH180
- For 20-minute label suffix –20
- Heavy-duty needle bearings are standard
- Non-ferrous base metal
- 3/4"(19mm) offset (measured from centerline of pivot to face of door)
- Available with longer than standard pivot pins. Increments are 1/4"(6mm), 1/2"(13mm), 3/4"(19mm) only
- Furnished with wood and machine screws

Technical Information

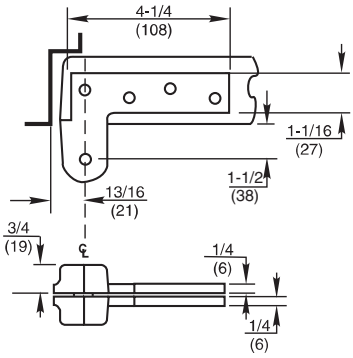

(Click here to view template)

Model H180 x 1-1/2"

Application
Full Mortise, Heavy-Duty
Non-handed

Product Description & Features
- Standard top pivot for heavy-duty 1-1/2" offset pivot sets
- Available for fire door assemblies (ferrous material)–specify FH180 x 1-1/2"
- For 20-minute label suffix –20
- Needle bearings are standard
- Non-ferrous base metal
- 1-1/2"(38mm) offset (measured from centerline of pivot to face of door)
- Available with longer than standard pivot pins. Increments are 1/4"(6mm), 1/2"(13mm), 3/4"(19mm) only
- Furnished with wood and machine screws

Technical Information

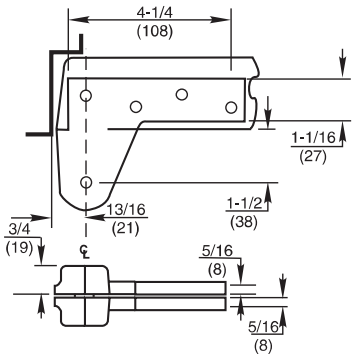

(Click here to view template)

Model L180

Application
Lead-Lined/Heavy/High Traffic Doors
Full Mortise
Non-handed

Product Description & Features
- Standard top pivot for L147, L117 pivots, L27 and L25 floor closers
- Screw holes designed to straddle lead in the middle of the door
- Available to accommodate door thicknesses: 1-3/4"(44mm), 2"(51mm), 2-1/4"(57mm), 2-1/2"(64mm), or 3"(76mm) –specify when ordering
- Available for fire door assemblies for 1-3/4"(19mm) doors only (ferrous material). Specify FL180
- For 20-minute label suffix –20
- Non-ferrous base material
- 3/4"(19mm) offset (measured from centerline of pivot to face of door)
- Available with longer than standard pivot pins. Increments are 1/4"(6mm), 1/2"(13mm), 3/4"(19mm) only
- Furnished with wood and machine screws

Technical Information

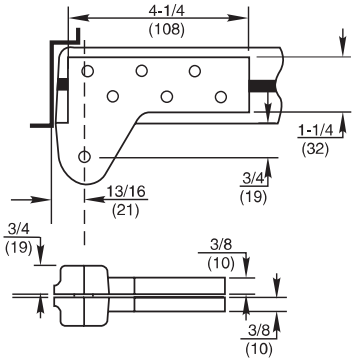

1-3/4 door shown

(Click here to view template)

Model FA180

Application
Asylum Design
Full Mortise
Handed

Product Description & Features
- Standard top pivot for SEC27 and SEC25
- Optional top pivot for institutional use or installations where flat surfaces are objectionable
- Ferrous base metal
- 3/4"(19mm) offset (measured from centerline of pivot to face of door)
- Available with longer than standard pivot pins. Increments are 1/4"(6mm), 1/2"(13mm), 3/4"(19mm) only
- Furnished with Torx® screws

Technical Information

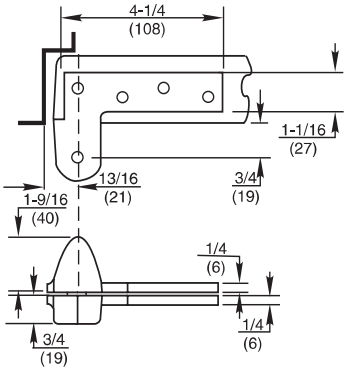

(Click here to view template)

MODEL 280

Application
Half Surface
Handed

BHMA/ANSI NO: C07501

Product Description & Features
- Optional top pivot where door portion cannot be mortised
- Available for fire door assemblies (ferrous material)–specify F280
- Non-ferrous base metal
- 3/4"(19mm) offset (measured from centerline of pivot to face of door)
- Contact factory if door is not flush
- Available with longer than standard pivot pins. Increments are 1/4"(6mm), 1/2"(13mm), 3/4"(19mm) only
- Furnished with wood and machine screws

Technical Information

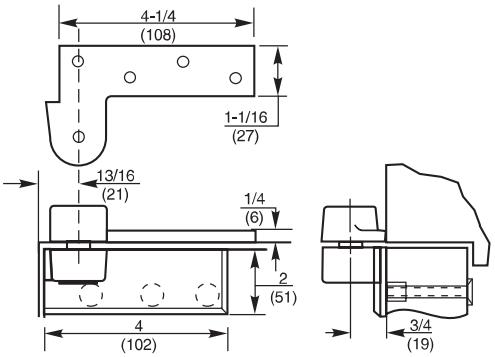

(Click here to view template)

MODEL 380

Application
Half Mortise
Handed

BHMA/ANSI NO: C07511

Product Description & Features
- Optional top pivot where jamb portion cannot be mortised
- Designed for channel iron door frames with aluminum, hollow metal or wood doors
- Available for fire door assemblies (ferrous material)–specify F380
- Door portion from L180 pivot is available if lead-lined doors are used–specify L380 and door thickness
- Non-ferrous base metal
- 3/4"(19mm) offset (measured from centerline of pivot to face of door)
- Available with longer than standard pivot pins. Increments are 1/4"(6mm), 1/2"(13mm), 3/4"(19mm) only
- Furnished with wood and machine screws

Technical Information

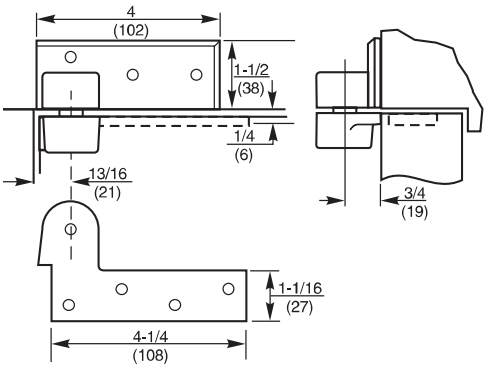

(Click here to view template)

MODEL 480

Application
Full Surface
Handed

BHMA/ANSI NO: C07521

Product Description & Features
- Optional top pivot where door and jamb portion cannot be mortised
- Designed for channel iron door frames and any door where through bolting is advantageous
- Available for fire door assemblies (ferrous material)–specify F480
- Non-ferrous base metal
- 3/4"(19mm) offset (measured from centerline of pivot to face of door)
- Available with longer than standard pivot pins. Increments are 1/4"(6mm), 1/2"(13mm), 3/4"(19mm) only
- Furnished with wood and machine screws

Technical Information

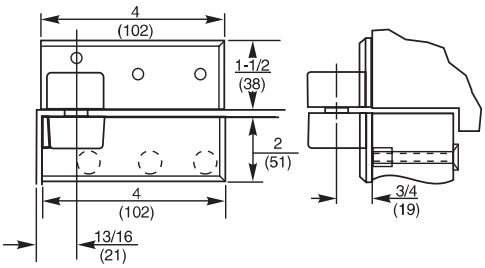

(Click here to view template)

Model 680

Application
Side Jamb Mounted
Frame Portion
Handed

Product Description & Features

- Used where no frame exists above door, or where it is not possible to anchor pivot into header of frame
- Non-ferrous base metal
- 3/4"(19mm) offset (measured from centerline of pivot to face of door)
- Side jamb portion can be surface mounted or mortised

Technical Information

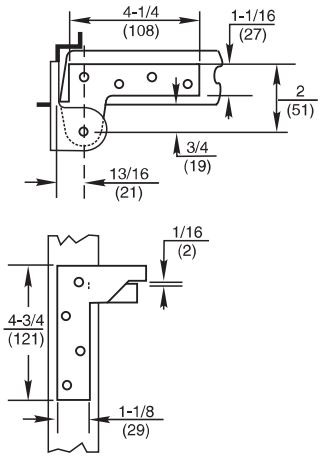

Technical Information

Surface Mount Jamb Double Mortise Door

(Click here to view template)

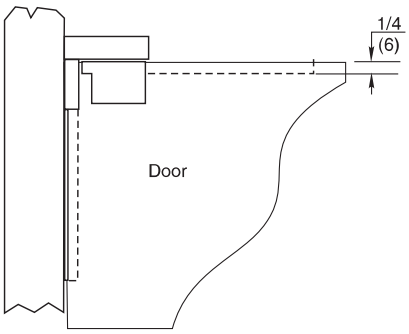

Mortise Jamb, Header and Door

(Click here to view template)

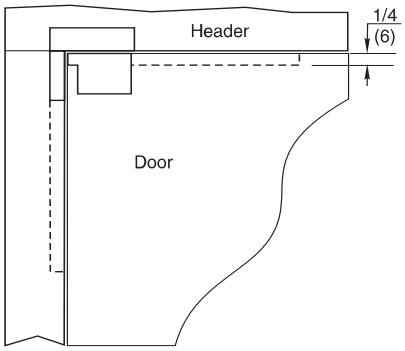

Mortise Jamb and Door

(Click here to view template)

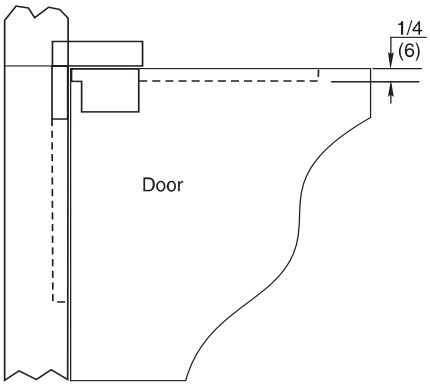

Intermediate or Side Jamb Offset Hung Pivots

Model 119

Application
Full Mortise
Handed

BHMA/ANSI NO: C07382

Product Description & Features
- Not load-bearing
- Available 3/4"(19mm) offset only
- Non-ferrous base material
- Used with 117, 117-1/4, 195, UNI closers, 127 closer
- Maintains door alignment
- Furnished with wood and machine screws

(Click here to view template)

Technical Information

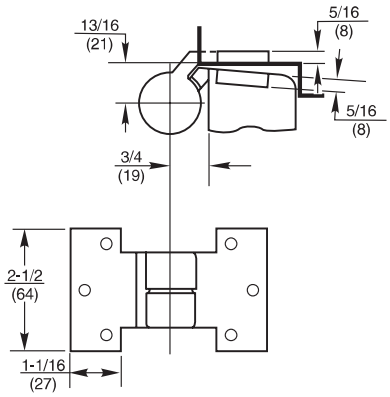

Model M19

Application
Full Mortise
Handed

BHMA/ANSI NO: C07321/C0731

Product Description & Features
- Not load-bearing
- Maintains door alignment
- For 20-minute label suffix –20
- Non-ferrous base metal
- 3/4"(19mm) offset
- Available for fire door assemblies (ferrous material)–specify FM19
- On labeled fire door assemblies, NFPA80 requires an intermediate pivot for every additional 30"(762mm) (or fraction thereof) of door height over 60"(1524mm)
- Furnished with wood and machine screws

(Click here to view template)

Technical Information

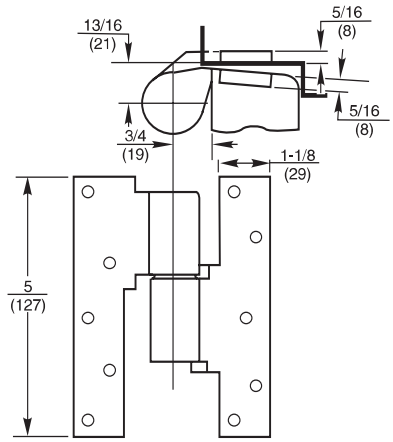

Model M190

Application
Heavy-Duty Full Mortise
Handed

BHMA/ANSI NO: C07321

Product Description & Features
- Used when frame condition does not allow standard top pivot
- Heavy-duty needle bearing
- Non-ferrous base metal
- 3/4"(19mm) offset
- Lateral load-bearing
- Available for fire door assemblies (ferrous material)–specify FM190
- For 20-minute label suffix –20
- On labeled fire door assemblies, NFPA80 requires an intermediate pivot for every additional 30"(762mm) (or fraction thereof) of door height over 60"(1524mm)
- Furnished with wood and machine screws

(Click here to view template)

Technical Information

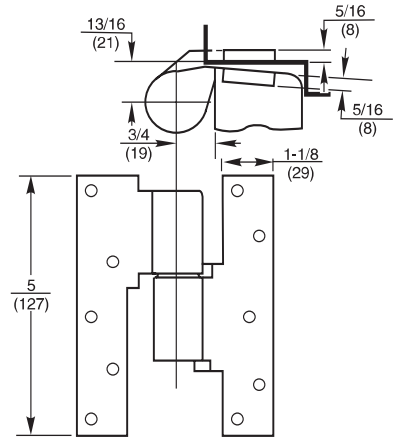

Intermediate or Side Jamb Offset Hung Pivots

Model M19 x 1-1/2"

Application
Full Mortise
Handed

BHMA/ANSI NO: C07321

Product Description & Features
- Not load-bearing
- 1-1/2"(38mm) offset to clear decorative door or frame trim
- Maintains door alignment
- Available for fire door assemblies (ferrous material)–specify FM19 x 1-1/2"
- For 20-minute label suffix –20
- On labeled fire door assemblies, NFPA80 requires an intermediate pivot for every additional 30"(762mm) (or fraction thereof) of door height over 60"(1524mm)
- Furnished with wood and machine screws

(Click here to view template)

Technical Information

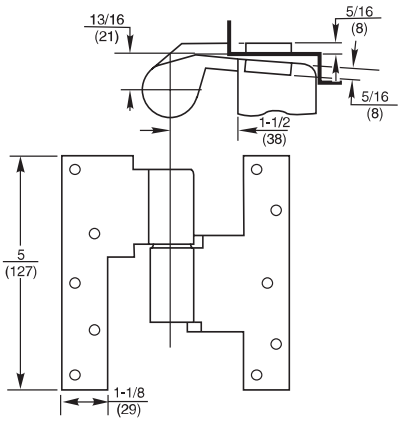

Model ML19

Application
Full Mortise
Lead-Lined, Heavy or High Traffic Doors
Handed

BHMA/ANSI NO: C07311

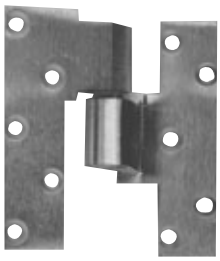

Product Description & Features
- Designed for doors with lead in center of door
- Screw holes designed to straddle the lead lining
- Available to accommodate door thicknesses 1-3/4"(44mm), 2"(51mm), 2-1/4"(57mm), 2-1/2"(64mm), or 3"(76mm)–specify thickness when ordering
- Load-bearing
- Non-ferrous base material
- Available for fire door assemblies–1-3/4"(44mm) door only–specify FML19
- For 20-minute label suffix –20
- On labeled fire door assemblies, NFPA80 requires an intermediate pivot for every additional 30"(762mm) (or fraction thereof) of door height over 60"(1524mm)
- Furnished with wood and machine screws

(Click here to view template)

Technical Information

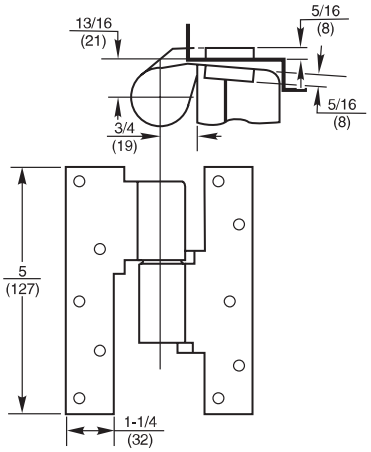

Model FA19

Application
Full Mortise
Asylum or High Security Applications
Handed

BHMA/ANSI NO: C07361

Product Description & Features
- Optional intermediate pivot for institutional use or installations where flat surfaces are objectionable
- Maintains door alignment
- May be used with fire door assemblies
- Ferrous base metal
- On labeled fire door assemblies, NFPA80 requires an intermediate pivot for every additional 30"(762mm) (or fraction thereof) of door height over 60"(1524mm)
- Furnished with Torx® screws

(Click here to view template)

Technical Information

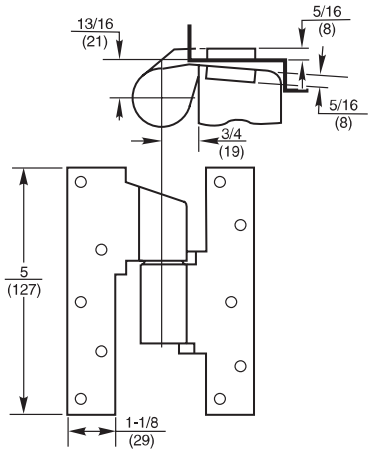

Model 219

Application
Half Surface
Handed

BHMA/ANSI NO: C07331

Product Description & Features
- Flush door and frame applications only
- Optional intermediate pivot where door portion cannot be mortised
- On labeled fire door assemblies, NFPA80 requires an intermediate pivot for every additional 30"(762mm) (or fraction thereof) of door height over 60"(1524mm)
- Maintains door alignment
- Available for fire door assemblies (ferrous material)–specify F219
- Non-ferrous base metal
- 3/4"(19mm) offset only
- Furnished with wood and machine screws

Technical Information

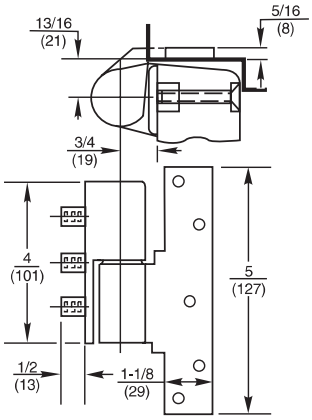

(Click here to view template)

Model 319

Application
Half Mortise
Handed

BHMA/ANSI NO: C07341

Product Description & Features
- Flush door and frame applications only
- Optional intermediate pivot where jamb portion cannot be mortised
- Door portion from ML19 pivot is available if lead-lined door is used–specify L319 and door thickness
- Non-ferrous base metal
- 3/4"(19mm) offset only
- Maintains door alignment
- Available for fire door assemblies–specify F319
- On labeled fire door assemblies, NFPA80 requires an intermediate pivot for every additional 30"(762mm) (or fraction thereof) of door height over 60"(1524mm)
- Furnished with wood and machine screws

Technical Information

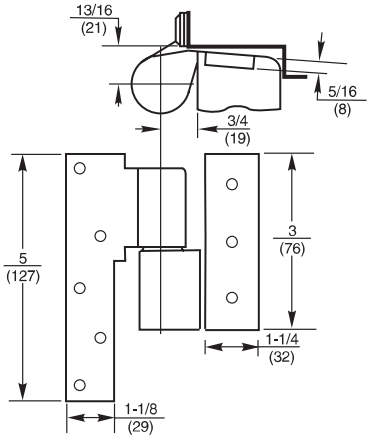

(Click here to view template)

Model 419

Application
Full Surface
Handed

BHMA/ANSI NO: C07351

Product Description & Features
- Flush door and frame applications only
- Optional intermediate pivot where door and jamb portion cannot be mortised
- Non-ferrous base metal
- 3/4"(19mm) offset only
- Maintains door alignment
- Available for fire door assemblies (ferrous material)–specify F419
- On labeled fire door assemblies, NFPA80 requires an intermediate pivot for every additional 30"(762mm) (or fraction thereof) of door height over 60"(1524mm)
- Furnished with wood and machine screws

Technical Information

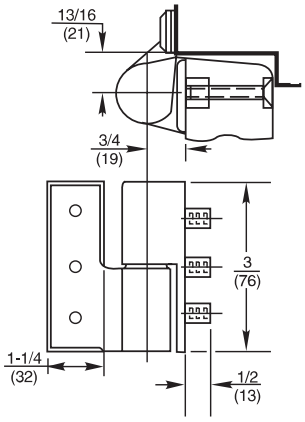

(Click here to view template)

MODEL CS-M19

Application
Offset Hung
Electric Pivot for Door Position Monitoring
Handed

Product Description & Features
- Maintains door alignment
- Magnetically activated reed switch in frame leaf of pivot transmits door position signal to a remote control unit
- Adjusting screw is easy to set on-site after installation. Screw is disguised as an installation screw
- Door and jamb portion are factory assembled and cannot be separated
- Switch rated at 0.3 amps and 28 volts maximum
- Not available in ferrous material
- 3/4"(19mm) offset
- Not load-bearing
- Furnished with wood and machine screws
- For 20-minute label, suffix –20

(Click here to view template)

Technical Information

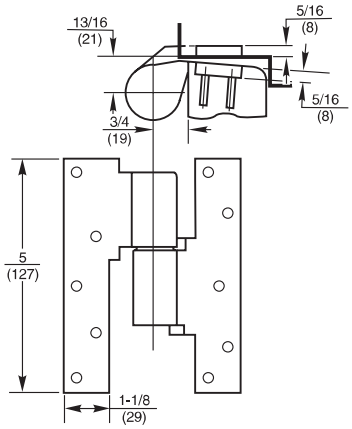

MODEL E-M19

Application
Offset Hung
Electric Pivot for Power Transfer
Handed

Product Description & Features
- Maintains door alignment
- Standard with four wires, six wires maximum
- 24-gauge wire is rated at 2 amps for low voltage, class II wiring applications
- Available in non-ferrous and malleable iron for fire door assemblies–specify EFM19
- 3/4"(19mm) offset
- Not load-bearing
- Door and jamb portion are factory assembled and cannot be separated
- Furnished with wood and machine screws
- For 20-minute label, suffix –20

(Click here to view template)

Technical Information

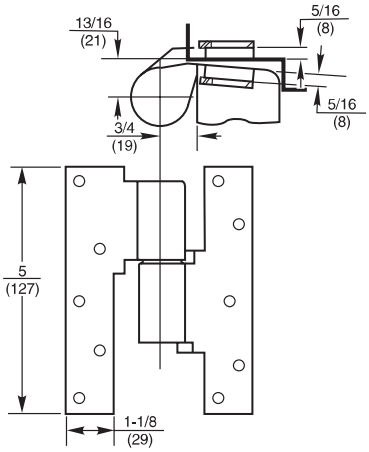

MODEL E-M19U

Application
Offset Hung
Electric Pivot for Power Transfer
Handed

Product Description & Features
- Maintains door alignment
- Designed and UL listed for wiring used with electrical panic devices and other electronic locking means
- Junction boxes are supplied with pivots
- Door and jamb portion are factory assembled and cannot be separated. Wires pass through pivot for completely concealed wiring installations
- Available 2-wire only. Each wire is rated at 2 amps continuously. UL listed for 24-volt, Class I wiring
- Not available in ferrous material
- 3/4"(19mm) offset
- 18-gauge wire
- Furnished with wood and machine screws

(Click here to view template)

Technical Information

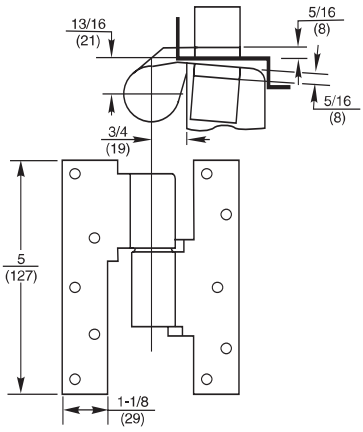

MODEL 127-3/4

Application
Interior Doors
Weight to 200 lbs.
Door Sizes up to 3'6"x 8'6"
(1067 x 2591mm)
Non-handed

BHMA/ANSI NO: C07042

Product Description & Features
- Standard top pivot 320 included
- Bottom pivot mortised into side jamb
- All center hung pivot sets are double acting unless stopped by some means on the door frame
- Not allowed for use on labeled doors and frames
- Available with longer spindles in 1/2"(13mm) increments up to 2"(51mm)
- Pivot point centered in thickness of door
- Door must have radius on pivot edge
- Furnished with wood and machine screws
- Weight of door borne by floor
- Doors do not return to center

(Click here to view template)

Technical Information

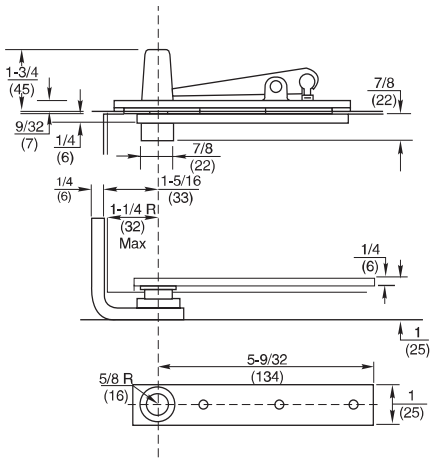

MODEL 128-3/4

Application
Interior Doors
Weight to 250 lbs.
Door Sizes up to 3'6"x 8'6"
(1067 x 2591mm)
Non-handed

BHMA/ANSI NO: C07032

Product Description & Features
Identical to the 127-3/4 except:
- Bottom pivot mounts directly to floor

(Click here to view template)

Technical Information

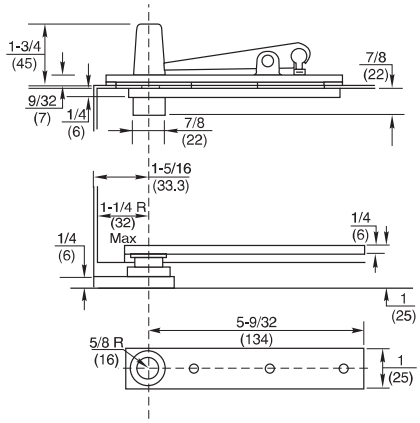

MODEL 370

Application
Exterior or Interior Doors
Weight to 500 lbs.
Door Sizes up to 3'8"x 8'6"
(1118 x 2591mm)
Non-handed

BHMA/ANSI NO: C07032

Product Description & Features
- Standard top pivot 340 included
- Bottom pivot mounts directly to floor
- Pivot set features sealed bearings for protection against weather and debris
- All center hung pivot sets are double acting unless stopped by some means on the door frame
- Not allowed for use on labeled doors and frames
- Available with longer spindles in 1/2"(13mm) increments up to 2"(51mm)
- Pivot point centered in thickness of door
- Door must have radius on pivot edge
- Furnished with wood and machine screws
- Doors do not return to center

(Click here to view template)

Technical Information

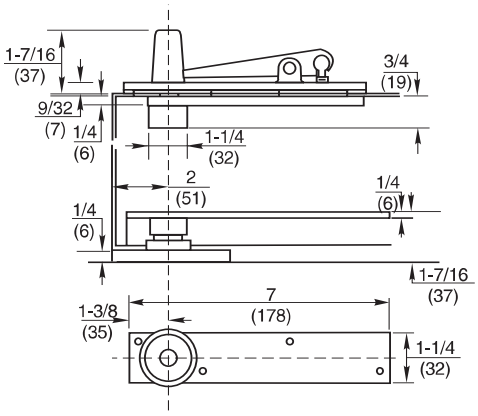

MODEL 117-3/4

Application
Exterior or Interior Doors
Weight to 600 lbs.
Door Sizes up to 4'0"x 8'6"
(1219 x 2591mm)
Non-handed

BHMA/ANSI NO: C07021 (modified)

* For doors taller than 8'6" use top pivot #345 in lieu of 340

Product Description & Features
- Standard top pivot 340 included
- Pivot set is fully concealed
- Bottom pivot is mortised into floor
- Heavy-duty bearings
- All center hung pivot sets are double acting unless stopped by some means on the door frame
- Not allowed for use on labeled doors and frames
- Available with longer spindles in 1/2"(13mm) increments up to 2"(51mm)
- Pivot point centered in thickness of door
- Door must have radius on pivot edge
- Furnished with wood and machine screws
- Doors do not return to center

(Click here to view template)

Technical Information

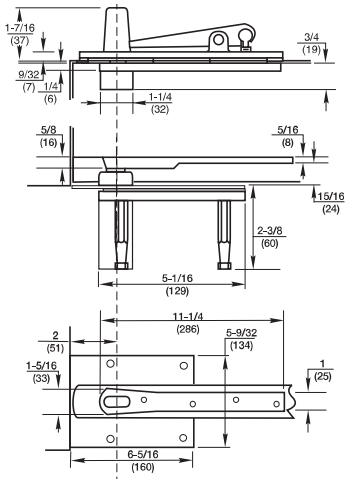

MODEL H117-3/4

Application
Exterior or Interior Doors
Weight to 1,000 lbs.
Door Sizes up to 4'0"x 8'6"
(1219 x 2591mm)
Non-handed

BHMA/ANSI NO: C07011

* For doors taller than 8'6" use top pivot #H345 in lieu of H340

Product Description & Features
- Standard top pivot H340 included
- Pivot set is fully concealed
- Bottom pivot is mortised into floor
- Standard set is equipped with end load arm for 2"(51mm) thick doors
- Extra heavy-duty bearings
- All center hung pivot sets are double acting unless stopped by some means on the door frame
- Not allowed for use on labeled doors and frames
- Available with longer spindles in 1/2"(13mm) increments up to 2"(51mm)
- Pivot point centered in thickness of door
- Door must have radius on pivot edge
- Furnished with wood and machine screws
- Doors do not return to center

(Click here to view template)

Technical Information

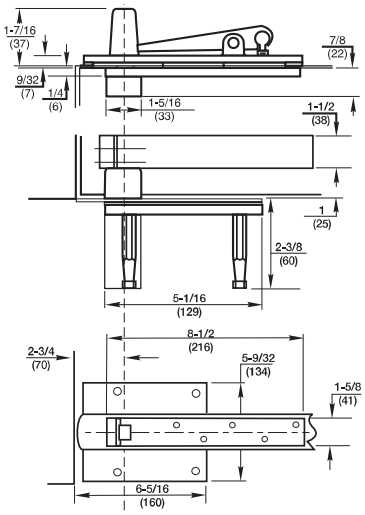

MODEL H117-3/4 x 587 ARM

* For doors taller than 8'6" use top pivot #H345 in lieu of H340

Product Description & Features
Identical to Model H117-3/4 except:
- Special side load arm for 1-3/4" thick doors
- Allows pivot point to be moved away from edge of door
- Standard top pivot H340 included

(Click here to view template)

Technical Information

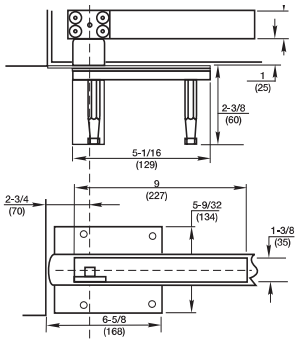

MODEL 320

Application
Fully Concealed
Non-handed

Product Description & Features

- Standard top pivot for Models 127-3/4 and 128-3/4 pivot sets
- Walking beam-type pivot–1/2"(13mm) diameter pivot pin with 3/4"(19mm) engagement
- Oil-impregnated sintered bronze bearing
- Completely concealed when door is closed
- Available with longer than standard pivot pins. Increments are 1/4"(6mm), 1/2"(13mm), 3/4"(19mm) only
- Furnished with wood and machine screws

Technical Information

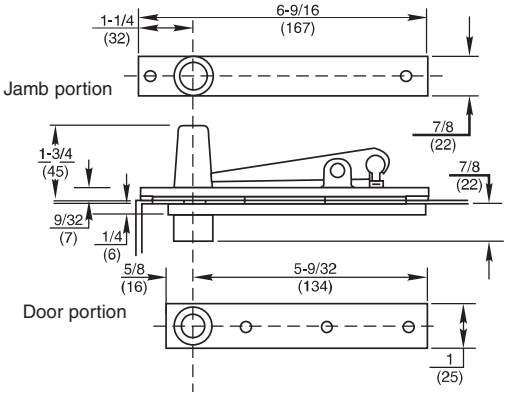

(Click here to view template)

MODEL 340

Application
Fully Concealed
Non-handed

Product Description & Features

- Standard top pivot for Models 370 and 117-3/4 pivot sets. Also used for 28, 30, 40 and 50 Series floor closers
- Walking beam-type pivot–1/2"(13mm) diameter pivot pin with 3/4"(19mm) engagement
- Oil-impregnated sintered bronze bearing
- Completely concealed when door is closed
- Available with longer than standard pivot pins. Increments are 1/4"(6mm), 1/2"(13mm), 3/4"(19mm) only
- Furnished with wood and machine screws

Technical Information

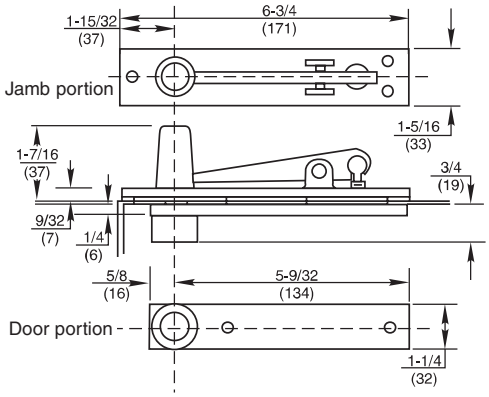

(Click here to view template)

MODEL H340

Application
Fully Concealed
Heavy-Duty
Non-handed

Product Description & Features

- Standard top pivot for Model H117-3/4 pivot set. Also used for H28 and H40 Series floor closers
- Walking beam-type pivot–11/16"(17mm) diameter pivot pin with 3/4"(19mm) engagement
- Heavy-duty needle bearing
- Completely concealed when door is closed
- Available with longer than standard pivot pins. Increments are 1/4"(6mm), 1/2"(13mm), 3/4"(19mm) only
- Furnished with wood and machine screws

Technical Information

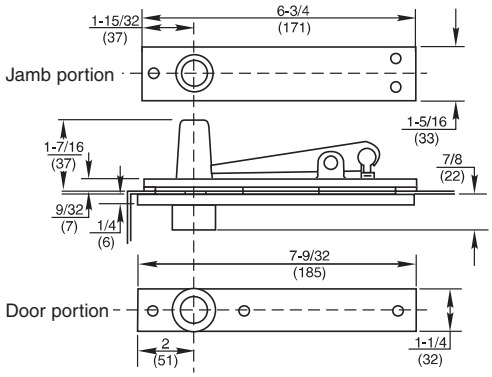

(Click here to view template)

Model 345

Application
Fully Concealed
Center Hung
Non-handed
Earthquake Tolerant

(Click here to view template)

Product Description & Features
- Long pivot pin engages in top of door 1-3/4"(44mm). Ideal for locations where there is a fear of dramatic building settling
- Can be used with any center hung bottom pivot. Order the bottom pivot LTP (less top pivot) and then the 345 on a separate line
- Walking beam-type pivot–1/2"(13mm) diameter pivot pin
- Oil-impregnated sintered bronze bearing
- Completely concealed when door is closed
- Furnished with wood and machine screws
- For doors over 8'6" in height

Technical Information

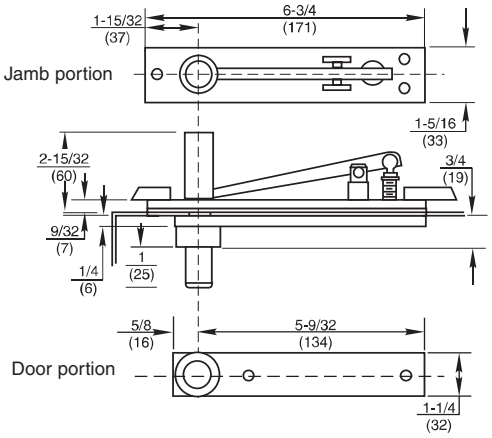

Model H345

Application
Fully Concealed
Center Hung
Non-handed
Earthquake Tolerant
Taller Doors

(Click here to view template)

Product Description & Features
- Long pivot pin engages in top of door 1-3/4"(44mm). Ideal for locations where there is a fear of dramatic building settling
- Can be used with any center hung bottom pivot. Order the bottom pivot LTP (less top pivot) and then the H345 on a separate line
- Walking beam-type pivot–3/4"(13mm) diameter pivot pin
- Heavy-duty needle bearing
- Completely concealed when door is closed
- Furnished with wood and machine screws
- For doors over 8'6" in height
- Used with heavy-duty pivots & closers

Technical Information

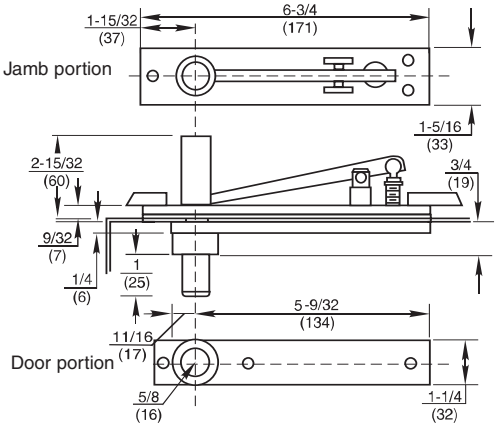

MODEL CS340

Application
Center Hung
Door Monitoring
Non-handed

Product Description & Features
- Walking beam type pivot –1/2"(13mm) diameter pivot pin with 3/4"(19mm) engagement
- Magnetically activated reed switch in frame of pivot transmits door position signal to a remote control unit
- Adjusting screw is easy to set on-site after installation. Screw is concealed by cover plate
- Switch rated at 0.3 amps and 28 volts maximum
- Oil-impregnated sintered bronze bearing
- Completely concealed when door is closed
- Available with extended pivot pins. Increments are 1/4"(6mm), 1/2"(13mm), 3/4"(19mm) only
- Furnished with wood and machine screws

Technical Information

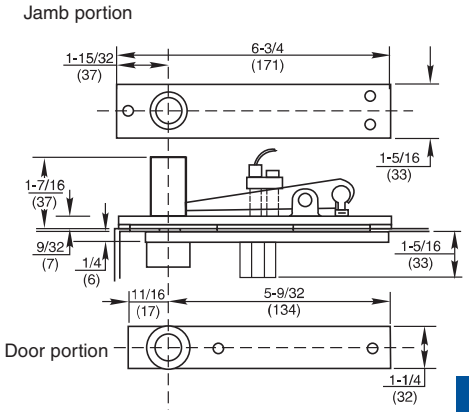

(Click here to view template)

MODEL EH340

Application
Center Hung
Top Pivot for Power Transfer
Non-handed

Product Description & Features
- Walking beam type pivot –11/16"(17mm) diameter pivot pin with 3/4"(19mm) engagement
- Available with two or four wires; two-wire is 18 gauge, four-wire is 22 gauge
- Wires are stranded and color-coded for easy installation
- Wire is rated at 3 amps continuously, used for Class II wiring applications
- Oil-impregnated sintered bronze bearing
- Completely concealed when door is closed
- Available with extended pivot pins. Increments are 1/4"(6mm), 1/2"(13mm), 3/4"(19mm) only
- Furnished with wood and machine screws

Technical Information

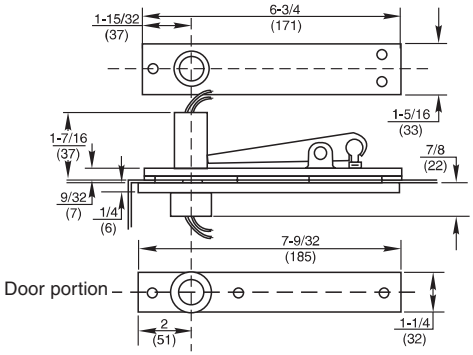

(Click here to view template)

MODEL 178

Application
Interior Doors
Weight to 175 lbs.
Door Sizes up to 3'0 x 8'6"
(914 x 2591mm)
Non Handed

Product Description & Features
- Used on full glass doors
- Doors do not return to center
- Accommodates glass 3/8"-1/2"
- Includes special floor portion, top and bottom patch fittings and walking beam top pivot

Technical Information

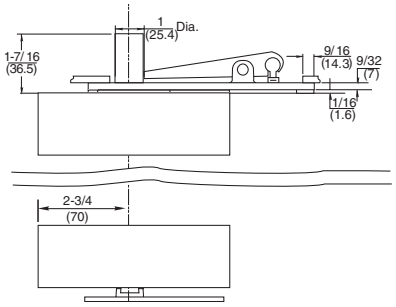

(Click here to view template)

Special Applications

Rixson® offers a wide variety of Special Layouts to accommodate most any door and frame application. Some of the most frequently used include: longer pivot pins to extend center hung doors completely to the ceiling and angle pivots for hanging a door without a frame header where a standard center hung pivot cannot be used. Consult your local representative or the factory for detailed information on Special Layouts for Pivots and Pivot Sets.

Model F519

Application
Pocket Door Pivot
Non-handed

ANSI 156.1 A8911

Product Description & Features
- Full mortise, non-handed pivot for pocket door applications
- Heavy-duty steel pivot with ball bearings
- Allows doors to swing 90°
- Minimum three pocket pivots per door
- Doors over 80"(2032mm) in height require four pocket pivots. Every additional 30"(762mm) of door height warrants another pocket pivot
- UL listed for all labeled pocket fire-door assemblies up to and including 3 hours

Note: Two Templates Required

Technical Information

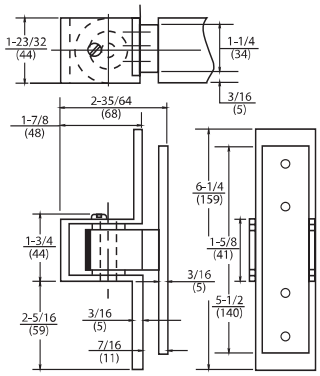

(Click here to view template 1)

(Click here to view template 2)

Angle Pivot-3

Product Description & Features
- Used where no frame exists above door, or where it is not possible to anchor pivot into header of frame
- Center hung applications only
- Brass construction with oilite bearing
- Furnished with 340 door portion
- Part is handed to keep installation plate to inside of room or building

Technical Information

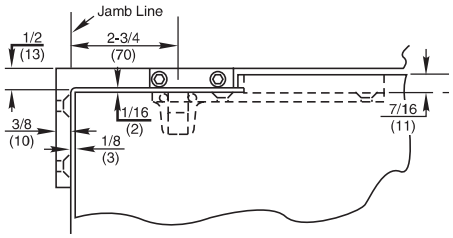

(Click here to view template)

Special Layout 102

Product Description & Features
- Used on special frame conditions, where standard frame portion is too large
- Example: Deep reveals where door portion of 180 is used with 102
- May also be used with 340 center hung top pivot
- Option for narrow doors and doors which use overhead stop or holders

Technical Information

(Click here to view template)

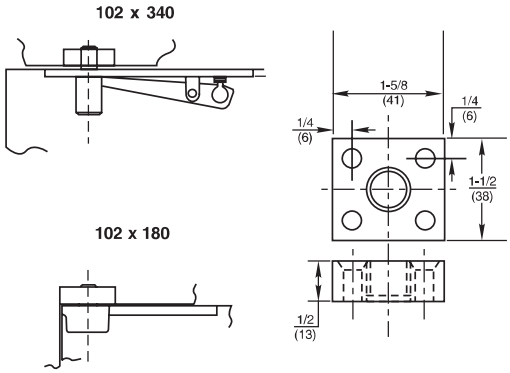

(Click here to view template)

117-1/4 PIVOT SET

Right Hand Shown
3/4" Offset Only

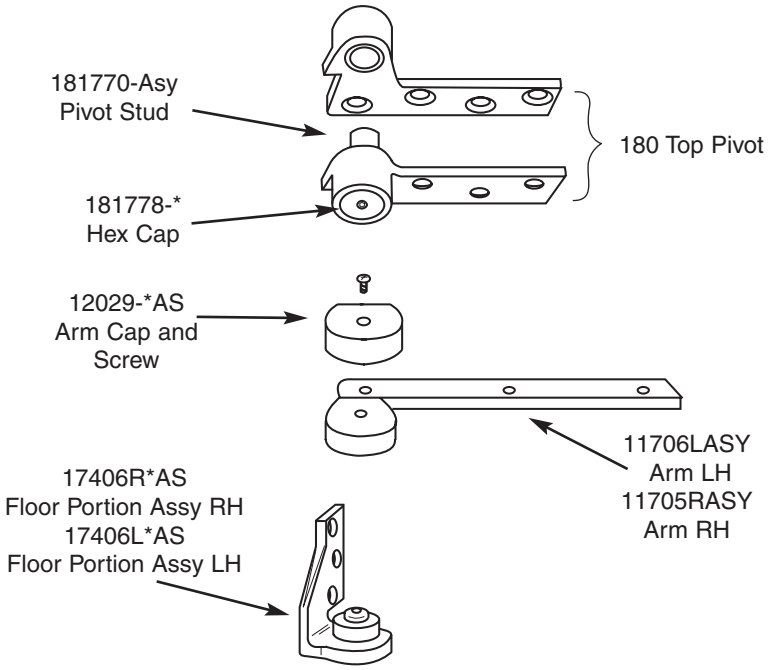

180 Screw Kit
*107014 - * Machine (2 required)*
*107114 - * Wood (2 required)*

117-1/4 Screw Kit
*117127 - **

** specify finish*

117, F117 PIVOT SET

Right Hand Shown
3/4" and 1-1/2" Offset

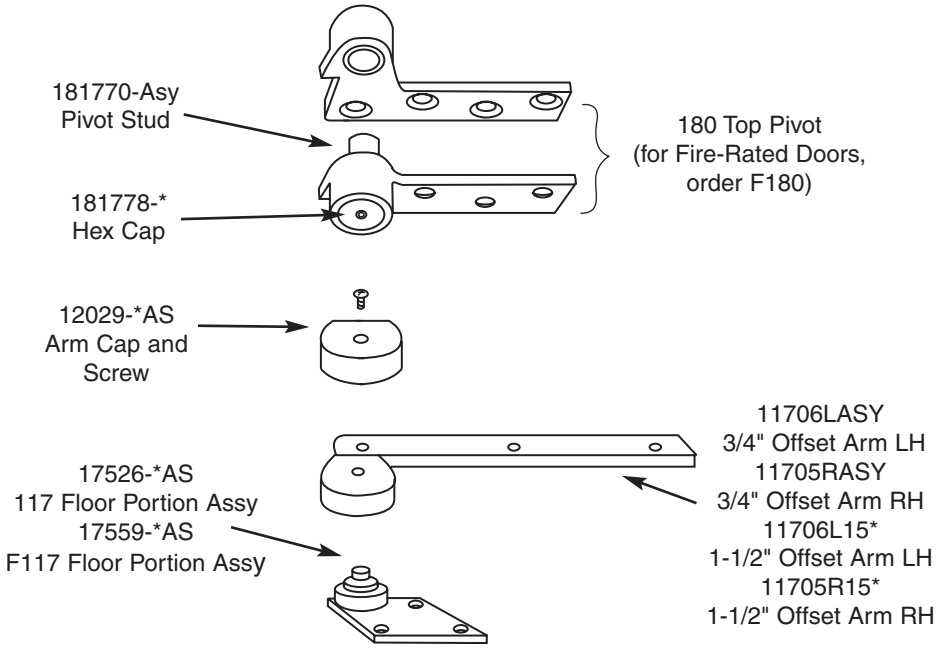

180/F180 Screw Kit
*107014 - * Machine (2 required)*
*107114 - * Wood (2 required)*

117/F117 Screw Kit
*117127 - **

** specify finish*

195 Pivot Set

Right Hand Shown
3/4" Offset Only

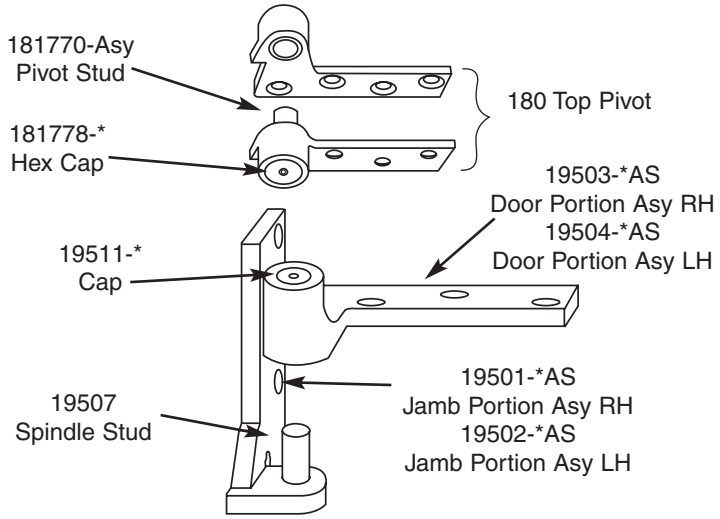

180 Screw Kit
*107014 - * Machine (2 required)*
*107114 - * Wood (2 required)*

195 Screw Kit
*107014 - * Machine (2 required)*
*107114 - * Wood (2 required)*

** specify finish*

147, F147 Pivot Set

Right Hand Shown
3/4" and 1-1/2" Offset

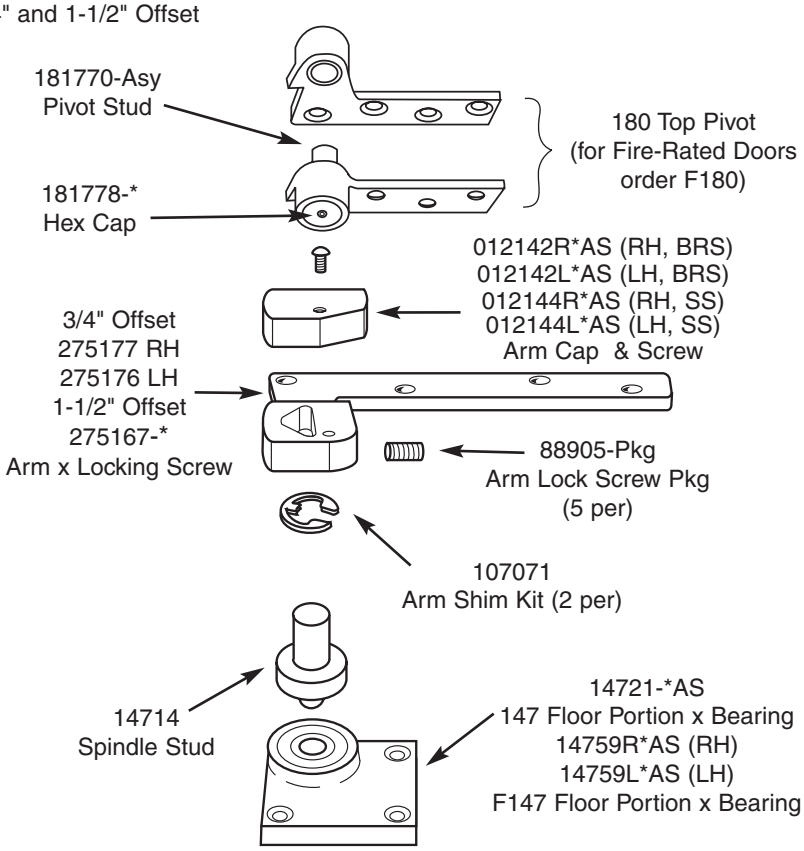

180/F180 Screw Kit
*107014 - * Machine (2 required)*
*107114 - * Wood (2 required)*

147/F147 Screw Kit
*107062 - **

Arm Screw Kit
107044 Machine
107144 Wood

** specify finish*

Closers prior to 1988 use Arm Cap 012132*

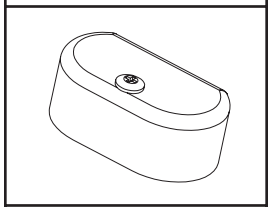

117-1/2, F117-1/2 Pivot Set

Right Hand Shown
3/4" and 1-1/2" Offset

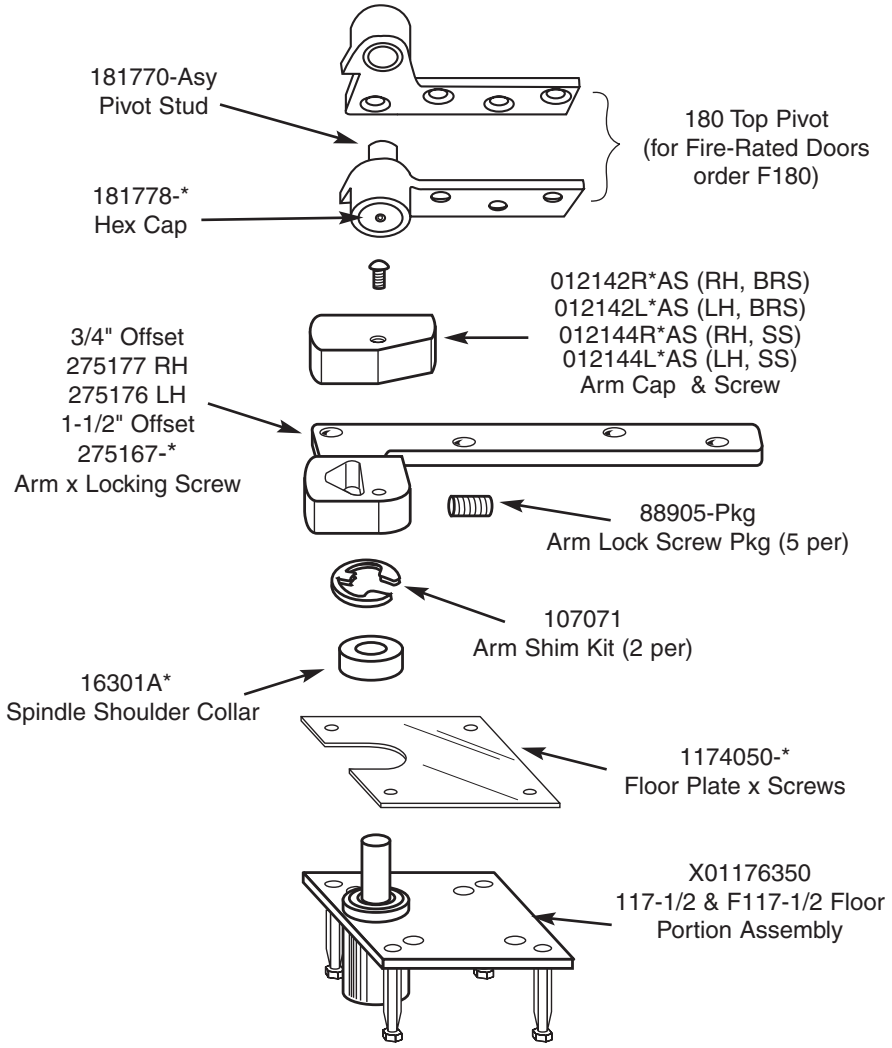

180/F180 Screw Kit
*107014 - * Machine (2 required)*
*107114 - * Wood (2 required)*

Arm Screw Kit
107044 Machine
107144 Wood

Floor Plate Screw Kit
*107004-**

** specify finish*

Closers prior to 1988 use Arm Cap 012132*

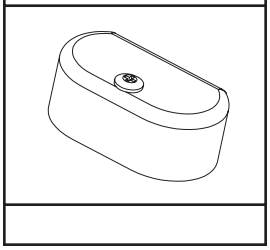

L147, FL147 Pivot Set

Right Hand Shown
3/4" Offset Only

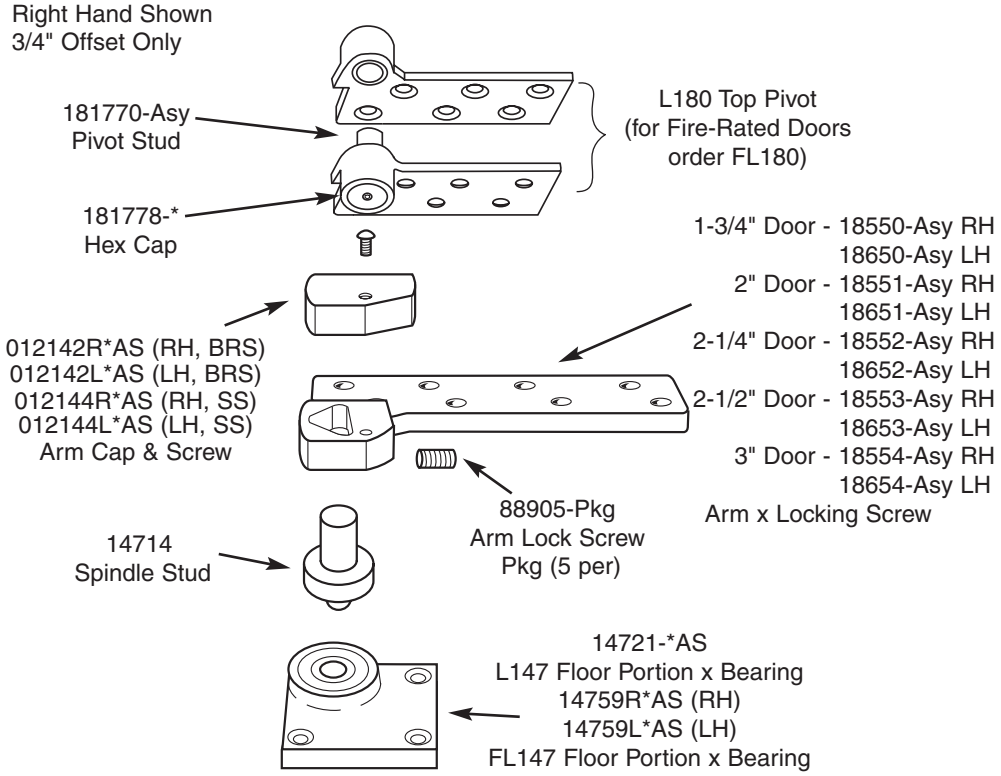

L180/FL180 Screw Kit
*107016 - * Machine (2 required)*
*107116 - * Wood (2 required)*

Arm Screw Kit
107048 Machine (2 required)
107144 Wood (2 required)

L147/FL147 Screw Kit
(includes "E" ring shim)
*107062-**

** specify finish*

Special Note:
FL147 is available for
1-3/4" doors only

Closers prior to 1988 use Arm Cap 012132*

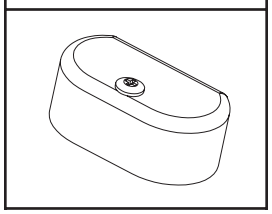

H147, FH147 Pivot Set

Right Hand Shown
3/4" Offset Only

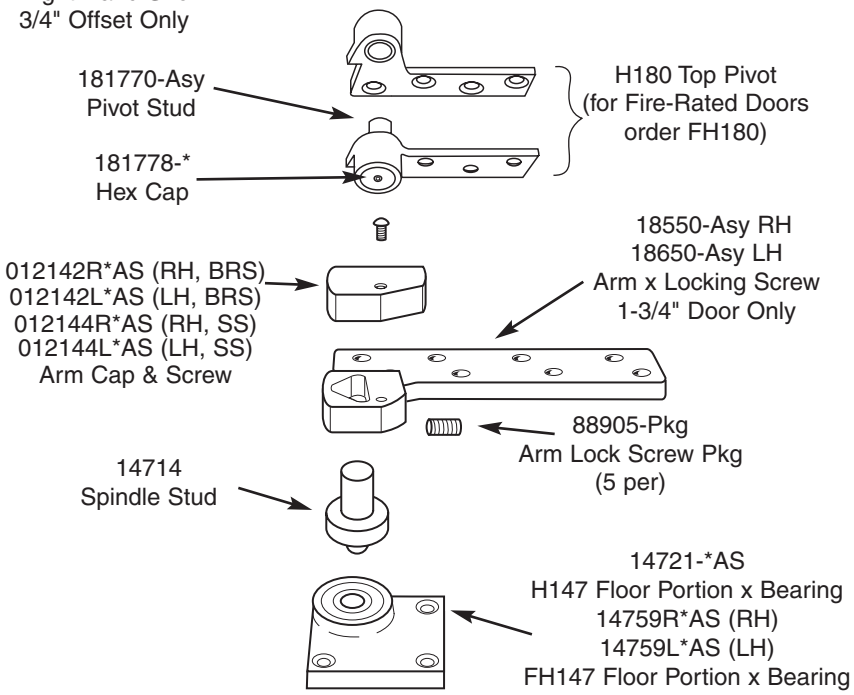

H180/FH180 Screw Kit
*107014 - * Machine (2 required)*
*107114 - * Wood (2 required)*

Arm Screw Kit
107048 Machine (2 required)
107144 Wood (2 required)

H147/FH147 Bottom Pivot Screw Kit
(includes "E" ring shim)
*107062-**

** specify finish*

Closers prior to 1988 use Arm Cap 012132*

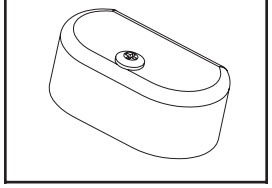

L117, FL117 Pivot Set

Right Hand Shown
3/4" Offset Only

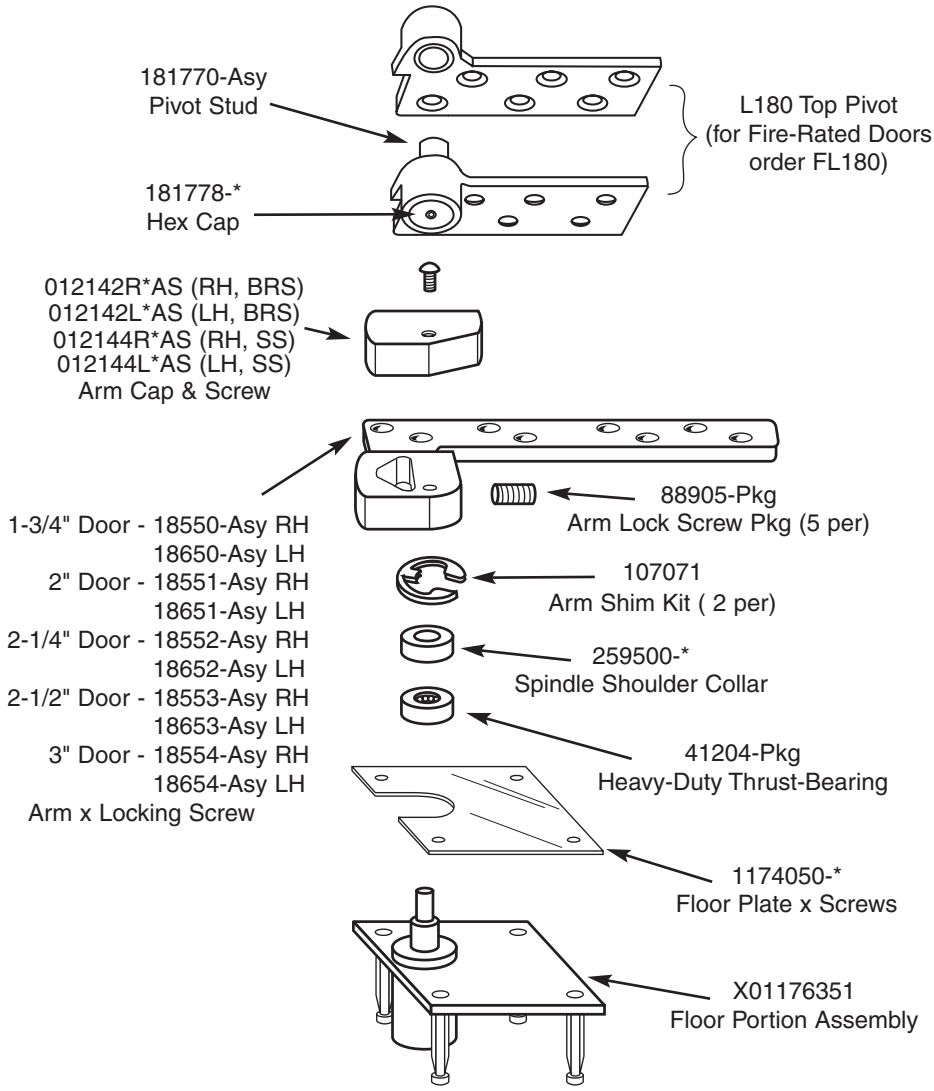

L180/FL180 Screw Kit
*107016 - * Machine (2 required)*
*107116 - * Wood (2 required)*

Arm Screw Kit
107048 Machine (2 required)
107144 Wood (2 required)

Floor Plate Screw Kit
*107004-**

** specify finish*

Special Note:
FL117 is available for 1-3/4" doors only

Closers prior to 1988 use Arm Cap 012132*

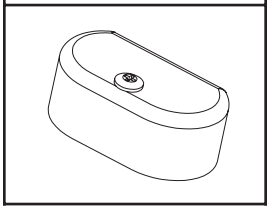

127-3/4 & 128-3/4 Pivot Sets

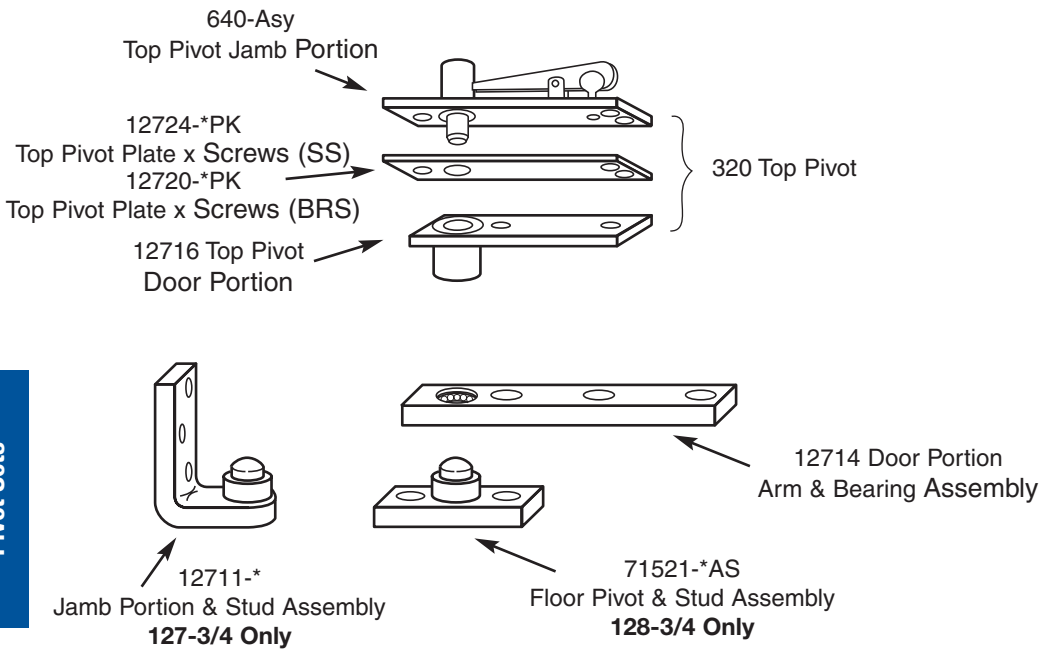

320 Screw Kit
107340 Machine & Wood

127-3/4 & 128-3/4 Screw Kit
*117127-**

** specify finish*

370 Pivot Set

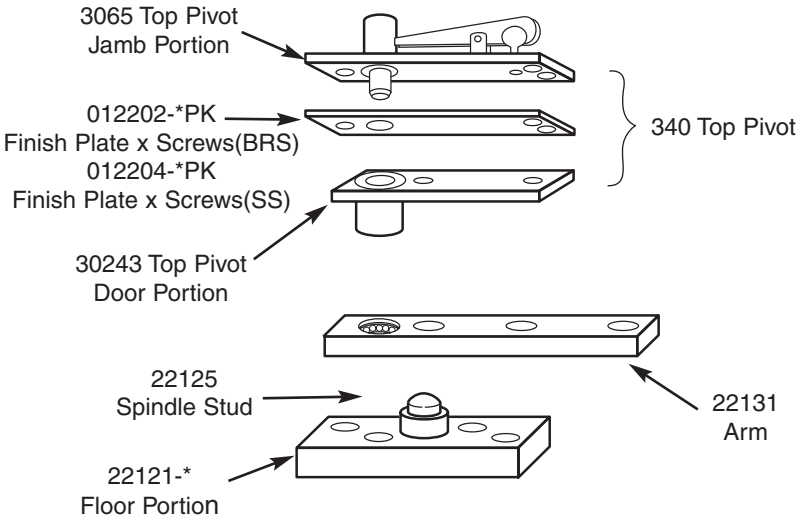

340 Screw Kit
107329 Machine & Wood

370 Screw Kit
*107370-**

** specify finish*

117-3/4 Pivot Set

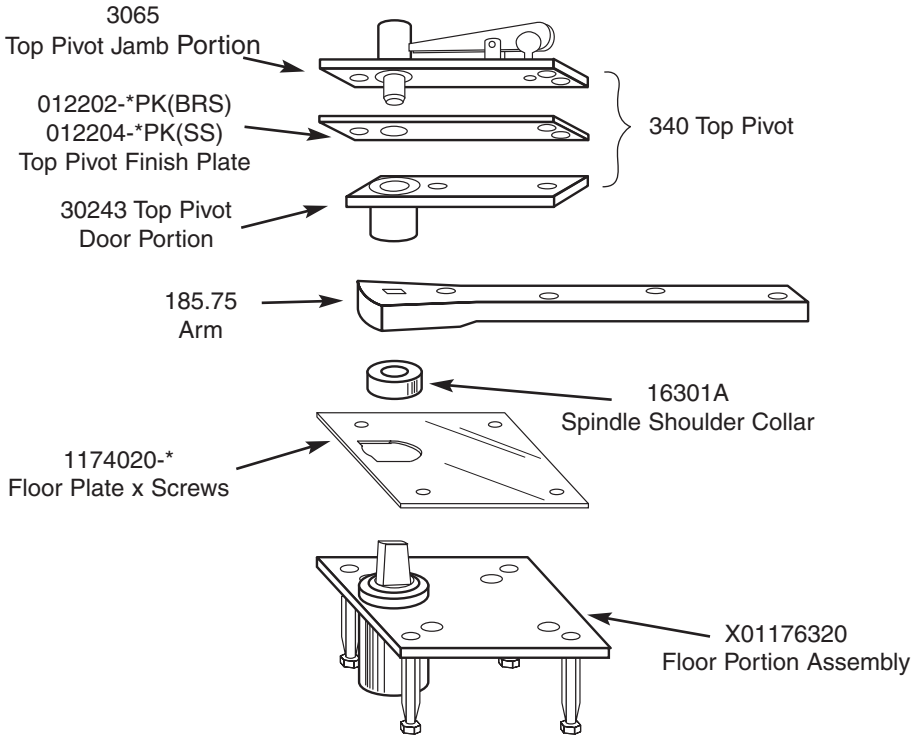

340 Screw Kit
107329 Machine & Wood

Arm Screw Kit
107064 Machine
107144 Wood

** specify finish*

H117-3/4 Pivot Set

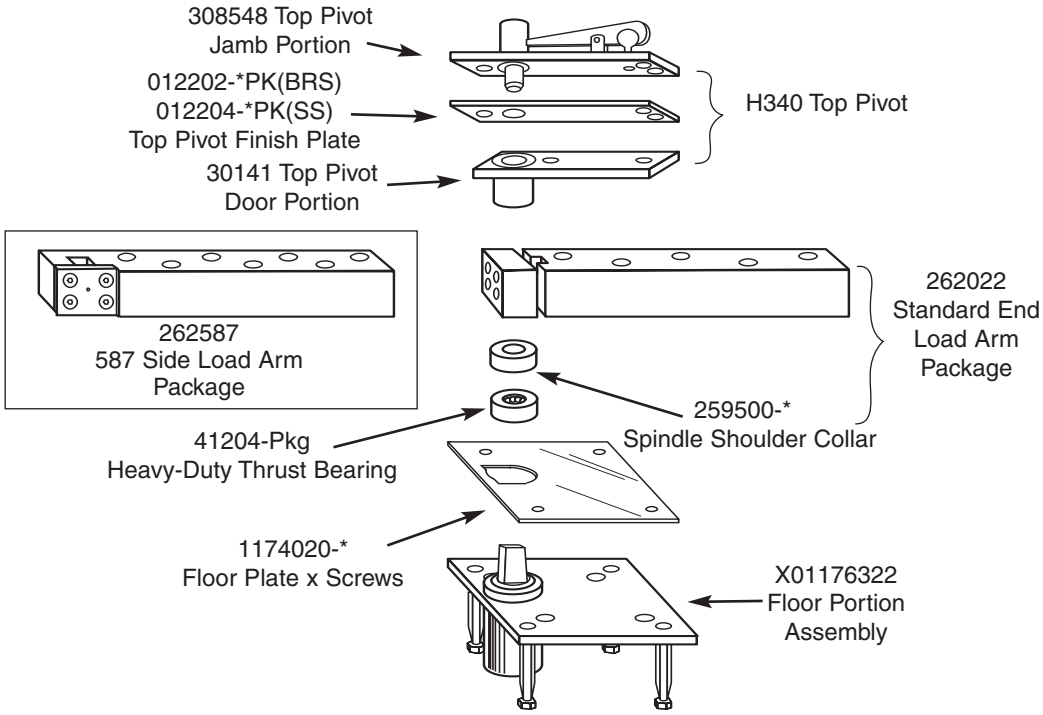

H340 Screw Kit
107329 Machine & Wood

Arm Screw Kit
107045 Machine
107145 Wood

587 Arm Screw Kit
107077
107177

Arm Shim Screw Kit
107060

Floor Plate Screw Kit
*107004 - **

** specify finish*

Quick Reference of Options

Reference

Model	Standard 3/4"Offset	Available 1-1/2"Offset	Center Hung	Standard Top Pivot	Available for 3-Hour Fire Rated Doors	Available for 20-Minute Fire Doors	Center Hung & 3/4" Offset Door Weight	1-1/2" Offset Door Weight	Handed (RH/LH)	Finish
117-1/4	yes	no		180	no	no	250		yes	yes
117	yes	yes		180	yes	yes	300	150	yes	yes
195	yes	no		180	no	no	450		yes	yes
147	yes	yes		180	yes	yes	600		yes	yes
117-1/2	yes	yes		180	yes	yes	650	350	yes	yes
L147	yes	*SPLO		L180	1-3/4"door only	yes	1000	450	yes	yes
H147	yes	no		H180	yes	yes	800		yes	yes
L117	yes	*SPLO		L180	1-3/4"door only	yes	1750	500	yes	yes
127-3/4			yes	320	no	no	200		no	yes
128-3/4			yes	320	no	no	250		no	yes
370			yes	340	no	no	500		no	yes
117-3/4			yes	340	no	no	600		no	yes
H117-3/4			yes	H340	no	no	1000		no	yes
178			yes	1494	no	no	175		no	yes

*special layout

Sample

F	147	3/4"	x 1/2" ext.spdl	RH	605
prefix	model	offset	suffix	hand	finish

Finishes

U.S. Standard	Description	BHMA Code
US3	Bright brass, clear coated	605
US4	Satin brass, clear coated	606
US9	Bright bronze, clear coated	611
US10	Satin bronze, clear coated	612
US10B	Satin oxidized bronze, oil rubbed	613
US26	Bright chrome plated	625
US26D	Satin chrome plated	626