RIXSON®

SMOK-CHEK® V

Electromechanical

Door Holder/Closer

with or without

Smoke Detector

Introduction

SMOK-CHEK® V is an electromechanical closer-holder combining the functions of a single-point door holder with the proven reliability of Rixson's M2220 Series door closer. *SMOK-CHEK* V is designed to hold fire/smoke doors open, and release when activated by a fire alarm system. *SMOK-CHEK* V units are listed as automatic closer release devices for use on fire rated/smoke doors.

SMOK-CHEK V is available as a fully detectored "stand alone" unit for buildings not equipped with an alarm system, or as a non-detectored unit in buildings with existing alarm systems. It is recommended for the majority of room and door requirements including cross-corridor and double egress doors, horizontal exit and stairway doors.

The modular design of Smok-Chek® offers ease of replacement of all major components including the magnet, holder, detector module, closer, and arm.

Standard Features

- Mounts on 2" door frame
- Dual equal chamber ionization detector modules
- Available in 24VAC/DC or 120VAC. Low current draw compatible with any fire alarm system
- Separate surface closer with multi-size spring
- Non-handed
- Mechanical hold open 180° (see pages 193 and 194 for appropriate models)
- Arms available for deep reveal on push side only
- Closer has adjustable back check cushioning
- Sprayed finished available:

Aluminum	689
Dark Bronze	690
Light Bronze	691
Gold	696

- ANSI Grade 1 156.15
- 2-year limited warranty
- U.L. listed

Suggested Specification

Closer/Holders shall be *Rixson SMOK-CHEK* V Series. Type shall be two-piece with holder frame mounted and closer door mounted. Holder shall be electromechanical. Closer to be rack and pinion in cast aluminum shell. Spring shall be multi-size 2-6. Separate closing latching, and back check cushioning valves. Maximum hold open 180° as per application. Unit to be fail safe. Detector shall be modular with dual ionization chamber. Wiring and conduit by others.

Caution

Smok-Cheks are intended to hold the doors open at all times and release/close the doors in case of a fire. Units are not designed to be manually cycled in and out of hold open. Where continual cycling is required, we suggest electrical breakout by means of a switch (Folger Adam® or equal) by others.

Contents

	Page
SMOK-CHEK® V: General Information	**192**
Models/Applications	193-194
Wiring Diagrams	195
Parts Drawings	**196-197**
Quick Reference of Options	**198**

0600/2600

Application

0600 Non-detectored
Pull side mount
Hold-open range 85° - 145°
Available: 120VAC (17MA)(.018amps)
24VAC/DC (80MA)(.091amps)
(Click here to view template)
2600 Detectored
Pull side mount
Hold-open same as 0600
Available: 120V (33MA)(.033amps)
24AC (47MA)(.120amps)
24VDC 4 wire (30MA)(.100amps
(Click here to view template)

Typical Installation

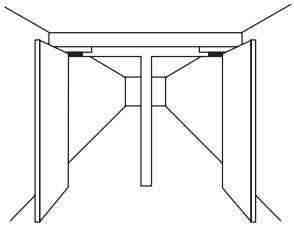

Cross Corridor –
Doors swing in same direction.

Technical Information

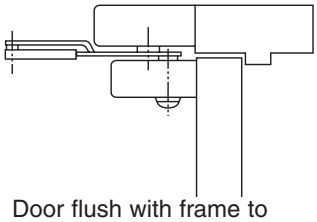

Door flush with frame to 1/8" reveal maximum on pull side of opening.

0601/2601

Application

0601 Non-detectored
Push side mount
Hold-open range 85° - 135° (to allow doors to swing 180° specify arm 550789) for reveals 2-3/4" or less. 85° - 95° for reveals 2-3/4" to 3-1/2"
Available: 120V (17MA)(.018amps)
24VAC/DC (80MA)(.091amps)
(Click here to view template)
2601 Detectored
Push side mount
Hold-open same as 0601
Available: 120VAC (33MA)(.033amps)
24AC (47MA)(.120amps)
24VDC 4 wire (30MA)(.100amps)
(Click here to view template)

Typical Installation

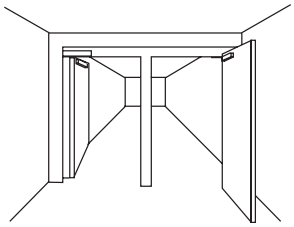

Cross Corridor –
Double egress doors swing in opposite direction.

Technical Information

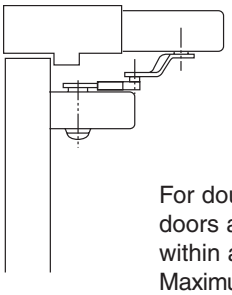

For double egress doors and doors set within a reveal. Maximum reveal: 3-1/2". For reveals between 3-1/2" and 5-1/2". Specify 550789 arm.

0602/2602

Application

0602 Non-detectored
Holder mounted on pull side
Closer mounted on push side
Hold-open range 85° - 180°
Available: 120VAC (17MA)(.018amps)
24VAC/DC (80MA)(.019amps)
(Click here to view template)
2602 Detectored
Holder mounted on pull side
Closer mounted on push side
Hold-open same as 0602
Available: 120VAC (33MA)(.018amps)
24AC (47MA)(.120amps)
24VDC 4 wire (30MA)(.100amps)
(Click here to view template)

Typical Installation

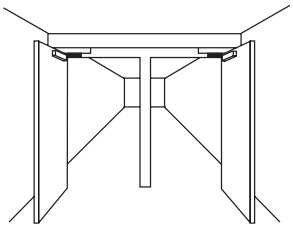

Cross Corridor –
Doors swing in same direction.

Technical Information

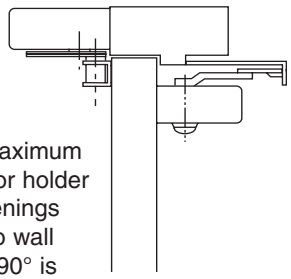

1/8" reveal maximum on pull side for holder body. For openings where door to wall clearance at 90° is minimal.

0100/2100

Application

0100 Non-detectored
Holder mounted on pull side
No closer supplied
Hold-open range 85° - 180°
Available: 120V (17MA)((.018amps)
24VAC/DC (80MA)(.091amps)
(Click here to view template)
2100 Detectored
Holder mounted on pull side
No closer supplied
Hold-open range 85° - 180°
Available: 120V (33MA)(.033amps)
24VAC (47MA)(.120amps)
24VDC 4 wire (30MA)(.100amps)
(Click here to view template)

Typical Installation

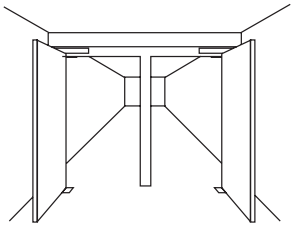

Cross Corridor –
Doors used with floor closers.

Technical Information

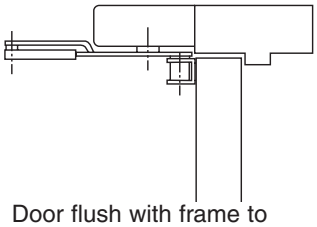

Door flush with frame to 1/8" reveal maximum on pull side of opening.

0101/2101

Application

0101 Non-detectored
Holder mounted on push side
No closer supplied
Hold-open range 85° - 135°
Available: 120VAC (17MA)(.018amps)
24VAC/DC (80MA)(.091amps)
(Click here to view template)
2101 Detectored
Holder mounted on push side
No closer supplied
Hold-open range 85° - 135°
Available: 120VAC (33MA)(.033amps)
24VAC (47MA)(.120amps)
24VDC 4 wire (30MA)(.100amps)
(Click here to view template)

Typical Installation

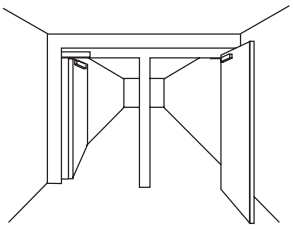

Cross Corridor –
Double egress doors swing in opposite direction.

Technical Information

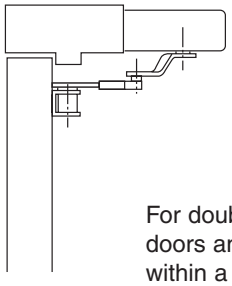

For double egress doors and doors set within a reveal. Maximum reveal: 3-1/2". For reveals between 3-1/2" and 5-1/2". Specify 550789 arm.

WIRING INSTRUCTIONS FOR 120VAC, 24VAC AND 24VDC

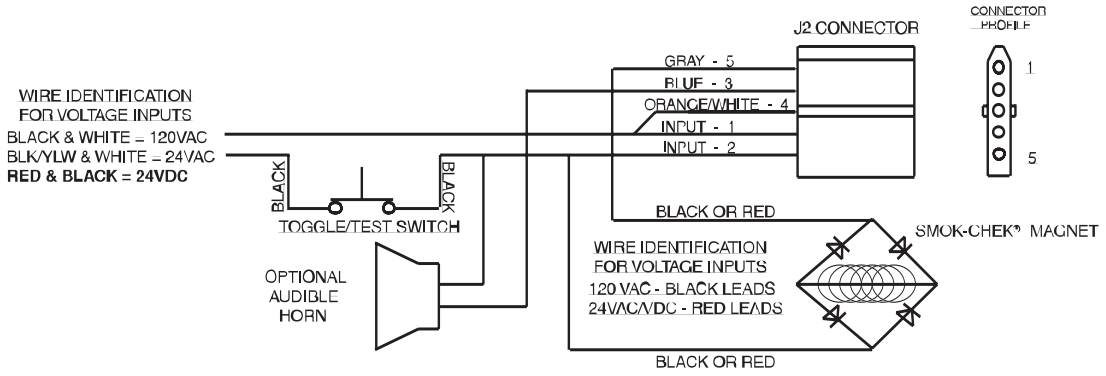

IMPORTANT: CAP OFF ALL CONNECTIONS NOT BEING USED!

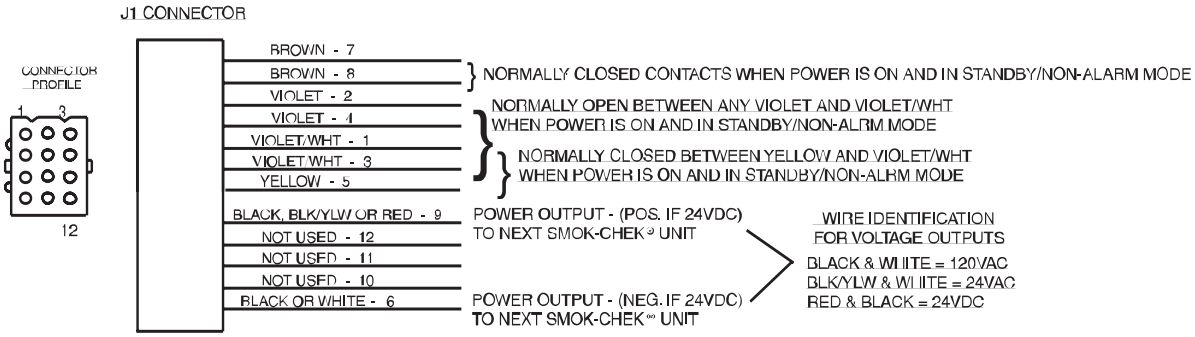

IMPORTANT: CAP OFF ALL CONNECTIONS NOT BEING USED!

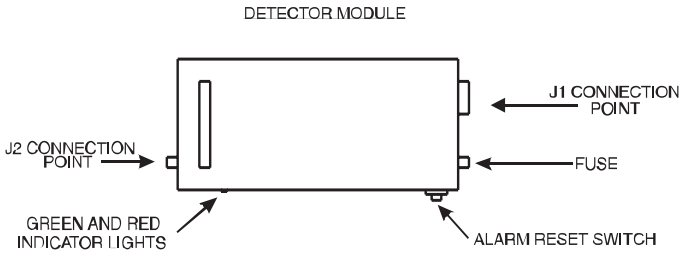

OPERATIONAL NOTES: WHEN THE SMOKE DETECTOR GOES INTO ALARM, POWER ON THE J2 CONNECTOR IS REROUTED FROM THE GRAY DOOR HOLDER LEAD (5) TO THE BLUE ANNUNCIATOR LEAD (3), THUS TURNING THE POWER OFF TO THE MAGNET AND TURNING ON THE HORN/LIGHT (IF USED). THE ANNUNCIATOR LEAD CAN BE HOOKED UP TO AN AUDIBLE AND/OR VISUAL ALARM AS SHOWN. SEE THE SYSTEM DRAWINGS FOR INFORMATION ON CONNECTIONS TO CONSECUTIVE SMOK-CHEKS.

SMOK-CHEK® V

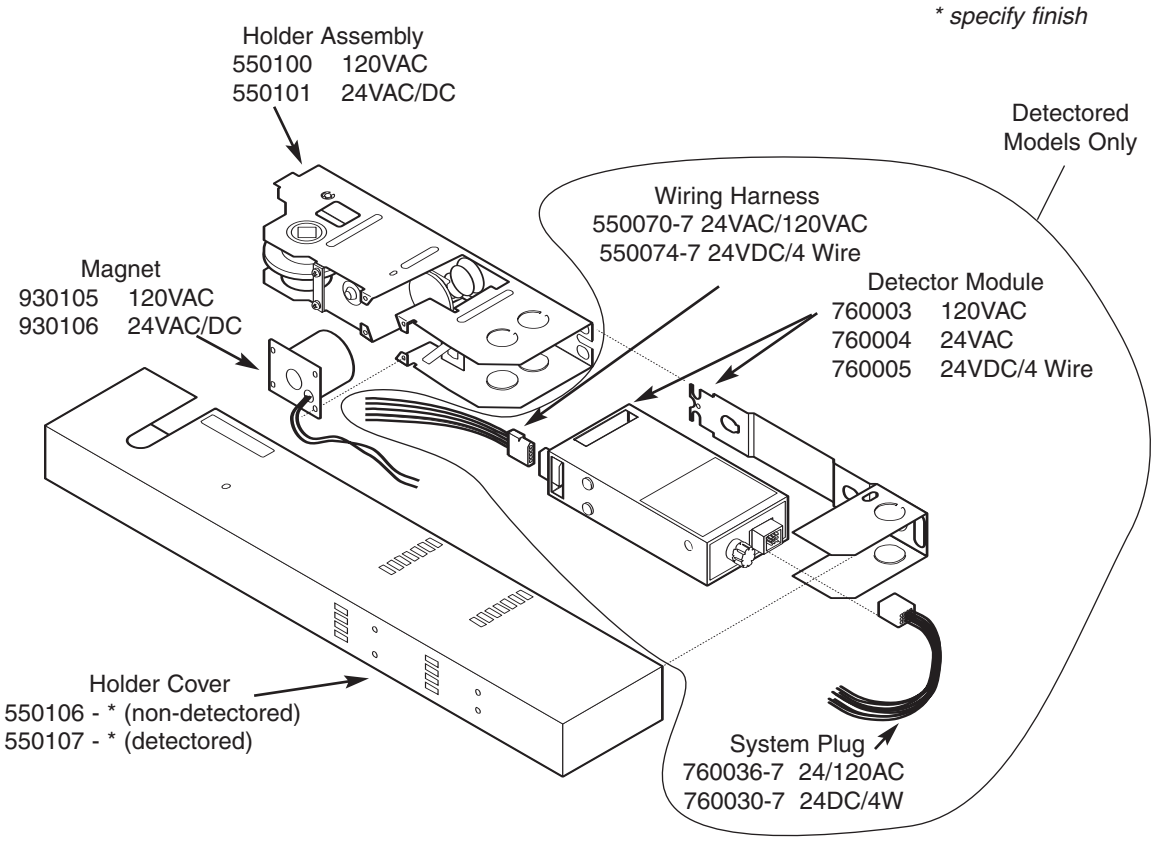

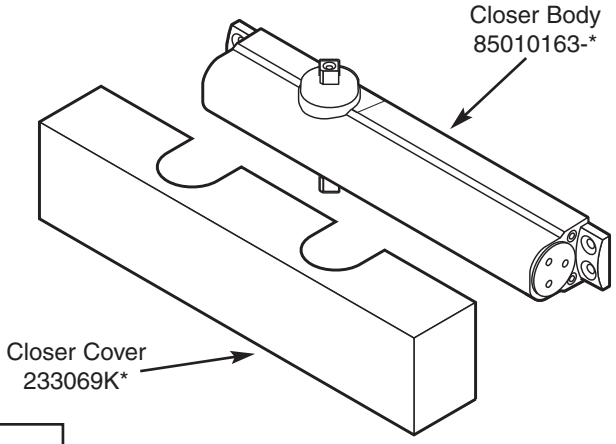

Screw Packs
550221- * for models with closers
530131- * for models without closers

SMOK-CHEK® V

** specify finish*

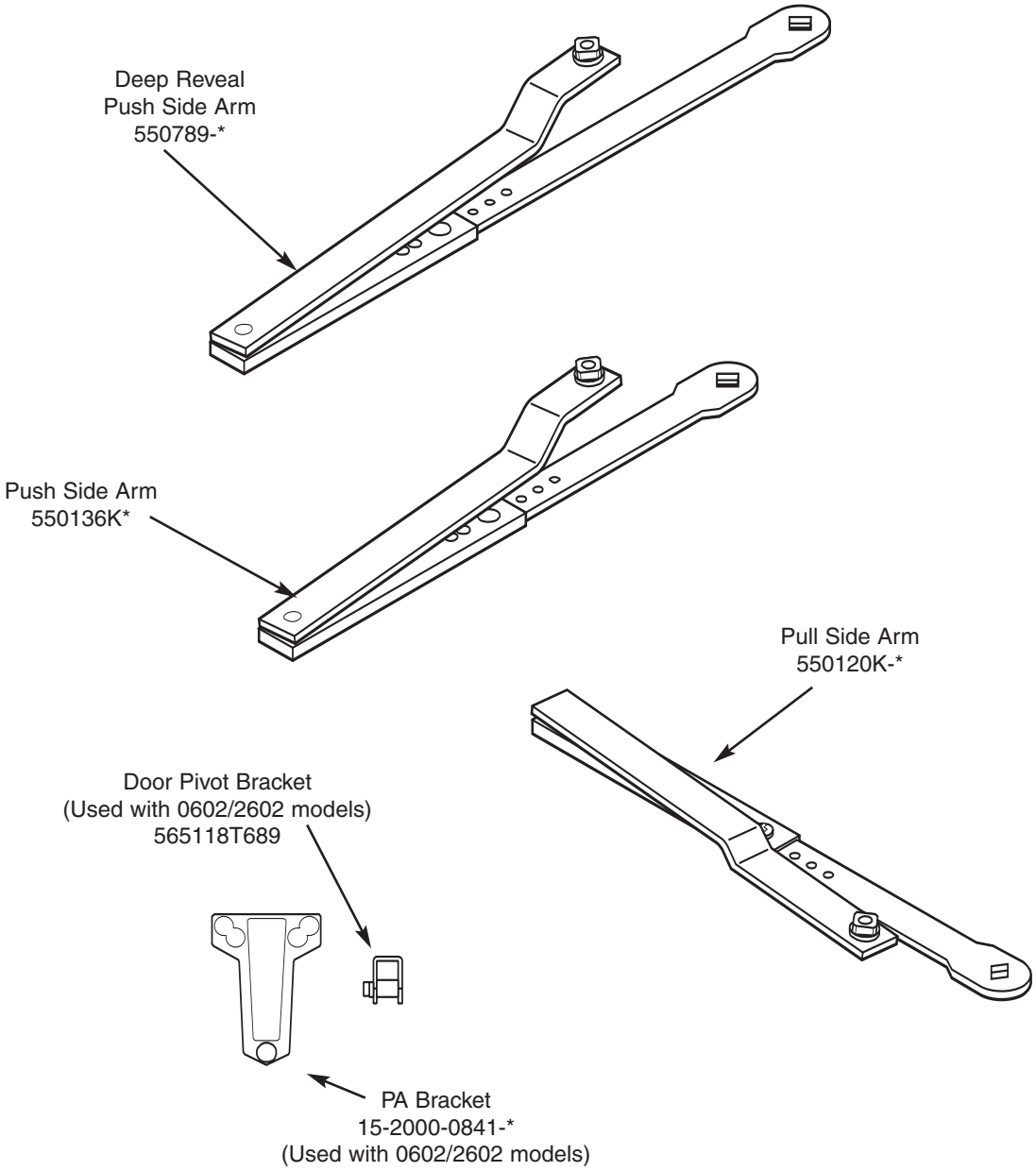

Quick Reference of Options

Reference

Sample

2600	24VDC	689
Model	Voltage	Finish

Model

Non-detectored	Detectored
0600	2600
0601	2601
0602	2602
0100	2100
0101	2101

Voltage

Detectored	120VAC
	24VAC
	24VDC
Non-detectored	120VAC
	24VAC/DC

Finishes

689	Aluminum
690	Dark Bronze
691	Light Bronze
696	Gold

Shipping Weight

Without detector	15 lbs.
With detector	17 lbs.

RIXSON®

SMOK-CHEK® VI

Electrohydraulic

Door Holder/Closer

with or without

Smoke Detector

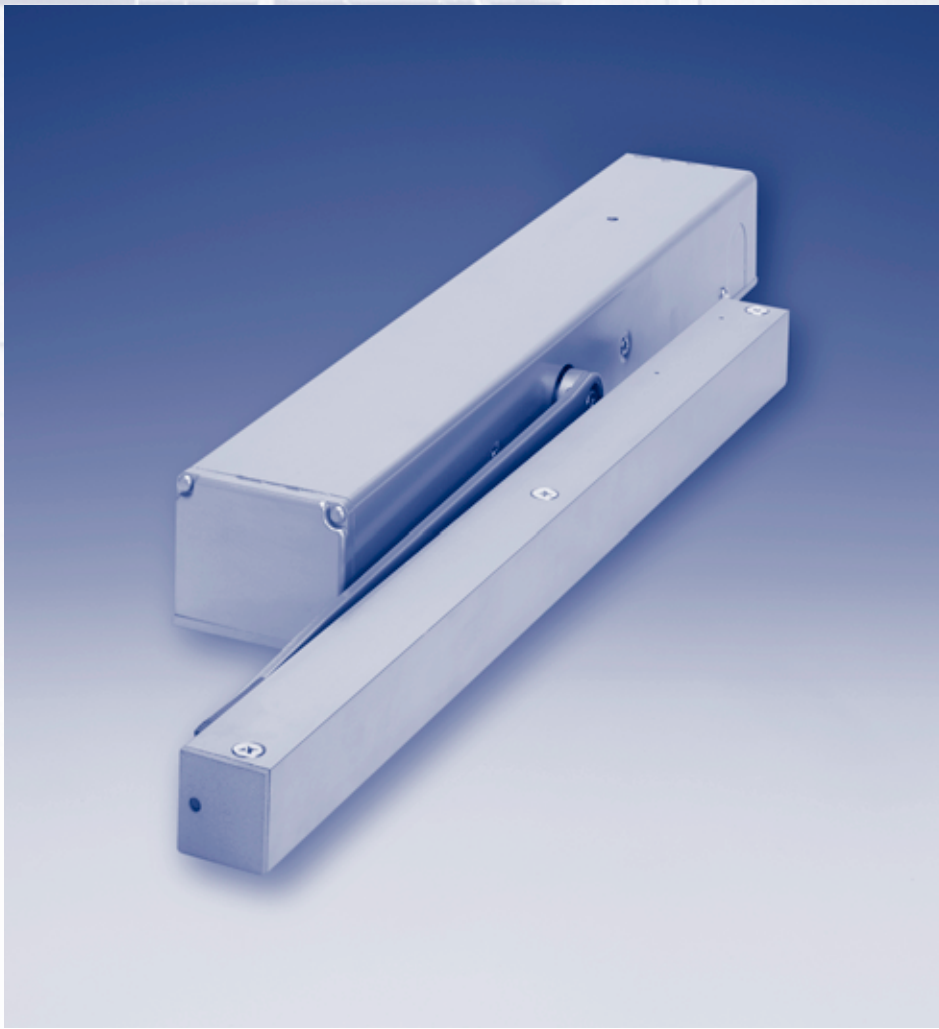

Standard Features

- Mounts on 2" door frame but projects up 4"
- Ionization smoke detector with dual chambers to reduce false alarms
- Available in 24VAC/DC or 120VAC. Low current draw compatible with any fire alarm system
- Spring size 4 only
- Handed
- Aluminum alloy shell
- Rack and pinion operation
- Adjustable closing and latch speeds
- Selective hold open option. Factory hold open at 80° and beyond. Can be adjusted in field
- Infinite hold open. Door will hold at any degree up to 165°. Maximum swing 180°. Allow 20° beyond handle projection to achieve hold open at 90°
- Optional free swing arm available. Door will stay at any desired degree (pull side only)
- Adjustable backcheck cushioning
- Adjustable backcheck positioning
- Narrow projection sprayed aluminum cover conceals the entire unit and projects 2-9/16" from frame face
- Sprayed finishes available:

Aluminum	689
Dark Bronze	690
Light Bronze	691
Gold	696

- ANSI Grade 1, meets A156.15 standards
- 2-year limited warranty

Suggested Specification

Closers shall be Rixson® SMOK-CHEK® VI Series. Units to be electromechanical (with integral smoke detector having a dual ionization chamber) and completely enclosed in a metal cover. Closer unit to be hydraulic. Full rack and pinion with cast aluminum alloy shell. Separate closing, latching, backcheck position and backcheck cushioning adjustments. Maximum door opening 180°, maximum hold open to 165°. Unit to be fail safe. Double Egress arm option available. Free swing arm option available. Wiring and conduit by others.

Recommended For

Cross corridor and patient room doors as required by compartmentation.

CAUTION

Smok-Cheks **are intended to hold the doors open at all times and release/close the doors in case of a fire. Units are not designed to be manually cycled in and out of hold open. Where continual cycling is required, we suggest electrical breakout by means of a switch (Folger Adam® or equal) by others.**

Contents

	Page
***SMOK-CHEK* VI: General Information**	**200**
Models/Applications	201-202
Wiring Diagrams	203
Parts Drawings	**204-205**
Quick Reference of Options	**206**

4PUSH

Typical Installation

Technical Information

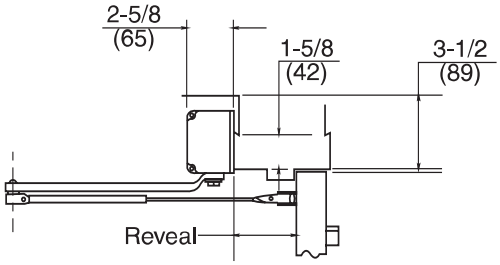

Product Description & Features

- Non-detectored
- Handed
- Push side (stop) mounted
- Minimum door width 22"
- Maximum door opening 180°
  Maximum hold open 165°
- Infinite Hold Open (Option) – door will hold at any degree (0°-175°), suffix I
  Selective Hold Open (Standard) – preset at factory (80°-175°), suffix S
- Available in 120V AC .035amps or 24V AC/DC .070amps
- Can be used with smoke detectors or as a slave unit to the 6PUSH
- When used in conjunction with 6PUSH, 120VAC or 24VAC/DC, this unit must be ordered as 24VAC/DC
- Combination units are best suited for use on corridor or stairwell doors
- Sprayed finishes only

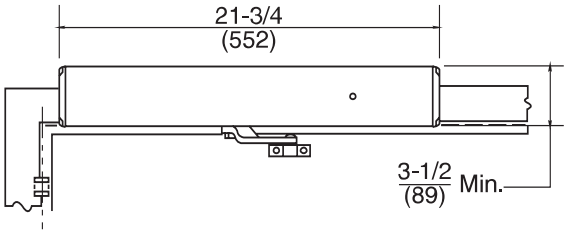

(Click here to view template)

4PULL

Typical Installation

Technical Information

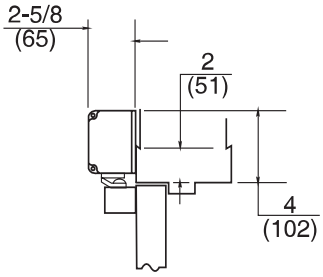

Product Description & Features

- Non-detectored
- Handed
- Pull side mounted
- Free swing arm available (prefix “FS”)
- Double egress arm available for reveals deeper than 1/8" up to 3"(prefix “DE”). Maximum opening 110°
- Minimum door width 28"
- Maximum door opening 180°
  Maximum hold open 165°
- 2" clearance required above 2" frame
- Sex bolts included standard
- When used in conjunction with 6PULL, 120VAC or 24VAC/DC, this unit must be ordered as 24VAC/DC
- Combination units are best suited for use on corridor or stairwell doors or patient room doors with the optional free swing arm
- Other features and functions identical to 4PUSH

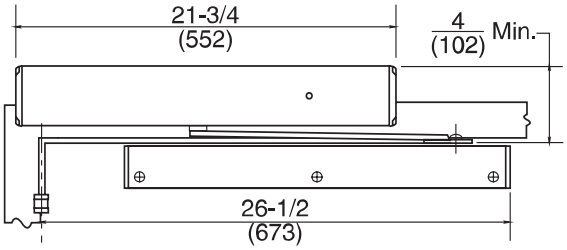

(Click here to view template)

6PUSH

Typical Installation

Technical Information

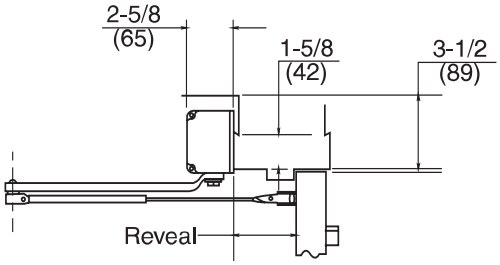

Product Description & Features

- Detectored with dual ionization chambers
- Handed
- Push side (stop) mounted
- Minimum door width 26"
- Maximum door opening 180°
  Maximum hold open 165°
- Infinite Hold Open (Option) – door will hold at any degree (0°-165°), suffix I.
  Selective Hold Open (Standard) – preset at factory (80°-165°), suffix S.
- Available in 120V AC .035amps or 24V AC/DC .070amps.
- Can be used in conjunction with the non-detectored unit (4PUSH)
- Best suited for use on corridor or stairwell doors
- Sprayed finished only

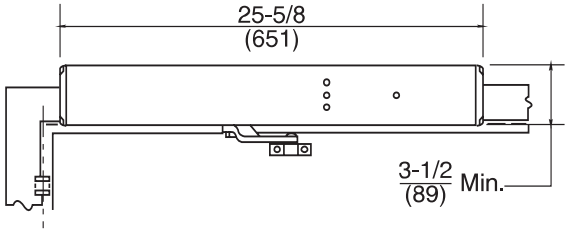

(Click here to view template)

6PULL

Typical Installation

Technical Information

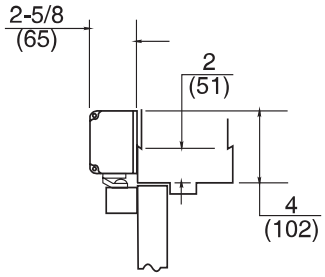

Product Description & Features

- Detectored with dual ionization chambers
- Handed
- Pull side mounted
- Free swing arm available (prefix “FS”)
- Double egress arm available for reveals deeper than 1/8" up to 3"(prefix “DE”). Maximum opening 110°
- Minimum door width 28"
- Maximum door opening 180°
  Maximum hold open 165°
- 2" clearance required above 2" frame
- Sex bolts included standard
- Can be used in conjunction with non-detectored unit (4PULL)
- Best suited for use on corridor or stairwell doors or patient room doors with the optional free swing arm
- Other features and functions identical to 6PUSH

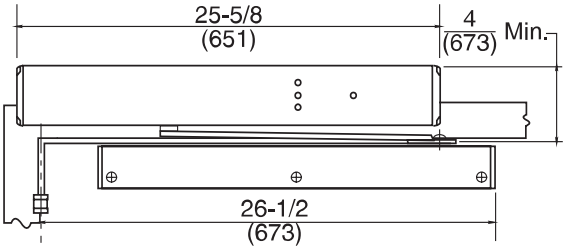

(Click here to view template)

DETECTOR UNIT

WIRING INSTRUCTIONS FOR 120VAC & 24VAC / 24VDC DETECTOR UNIT

SMOKE DETECTOR MODULE

#15-7200-0503-078

HOOK UP BOARD ASSEMBLY
#42-7200-0032-500 24VAC
#42-7200-0034-500 120VAC

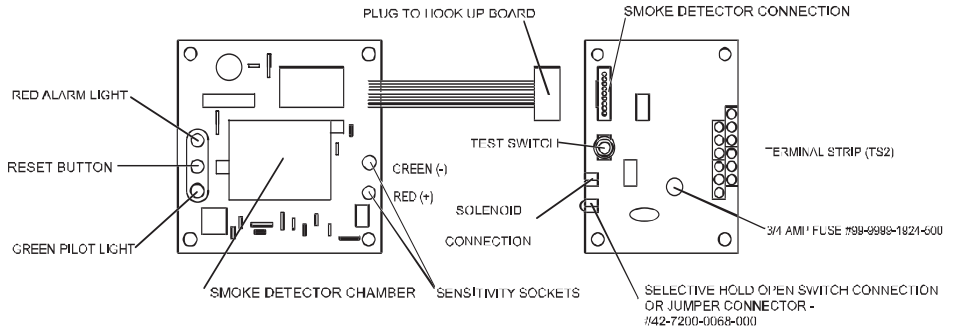

1		POWER INPUT TERMINALS. 120VAC OR 24VAC/VDC - CONTROLLED BY EXTERNAL ALARM SYSTEM
2		
3		NORMALLY CLOSED TROUBLE CIRCUIT TO EXTERNAL MONITORING
4		
5		CONTROLLED POWER OUTPUT GOING TO SLAVE IS ALWAYS 24VDC @ 24VAC/VDC OR 120VAC INPUT
6		
7		EARTH GROUND
8		NORMALLY CLOSED TROUBLE CIRCUIT TO EXTERNAL MONITORING DEVICE
9	(TERMINALS 8 & 9 INTERNALLY JUMPERED)	
10		
11	(TERMINALS 10 & 11 INTERNALLY JUMPERED)	
12		TO 24VDC EXTERNAL ALARM (BELL, HORN, ETC.)

TS2

WIRING INSTRUCTIONS FOR 120VAC & 24VAC / 24VDC HOOK-UP BOARD ONLY

120 VAC HOOK-UP BOARD

#42-7200-0036-500

24 VAC / DC HOOK-UP BOARD

#42-7200-0035-500

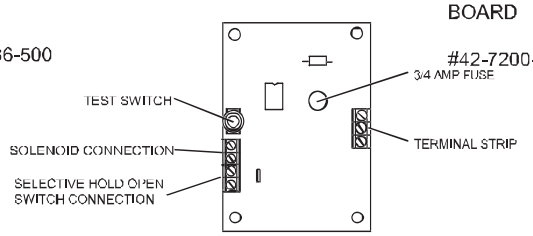

1	24VAC/VDC OR CONTROLLED INPUT FROM ALARM/DETECTOR UNIT NOTE: INTERRUPT (-) INPUT FROM FIRE ALARM PANEL IF REQUIRED
2	
3	GROUND

TERMINAL STRIP

NOTES:
1. All relay contacts rated 0.5 amps @ 125VAC 60Hz; 2.0 amps @ 30VDC.
2. Detector sensativity is factory set and can only be recalibrated at the factory.
3. Detector Environmental Limits: 100 deg F (38 deg C); 95% relative humidity. Cannot be installed in environments with a high concentration of corrosive vapors or where air velocity exceeds 300 ft per min. (91M/min.).
4. Maximum wire size for Input/System Terminal Strip is14 AWG.
5. Maximum/Minimum Operating Voltage Perimeters: +10%, -15%.

SPECIFICATIONS

	120VAC	24VAC	24VDC
VOLTAGE	120V 132V MAX 102V MIN	24V 26.4V MAX 20.4V MIN	24V 26.4V MAX 20.4V MIN
CURRENT	.035 AMPS	.070 AMPS	.070 AMPS

SMOK-CHEK® VI

** specify finish*

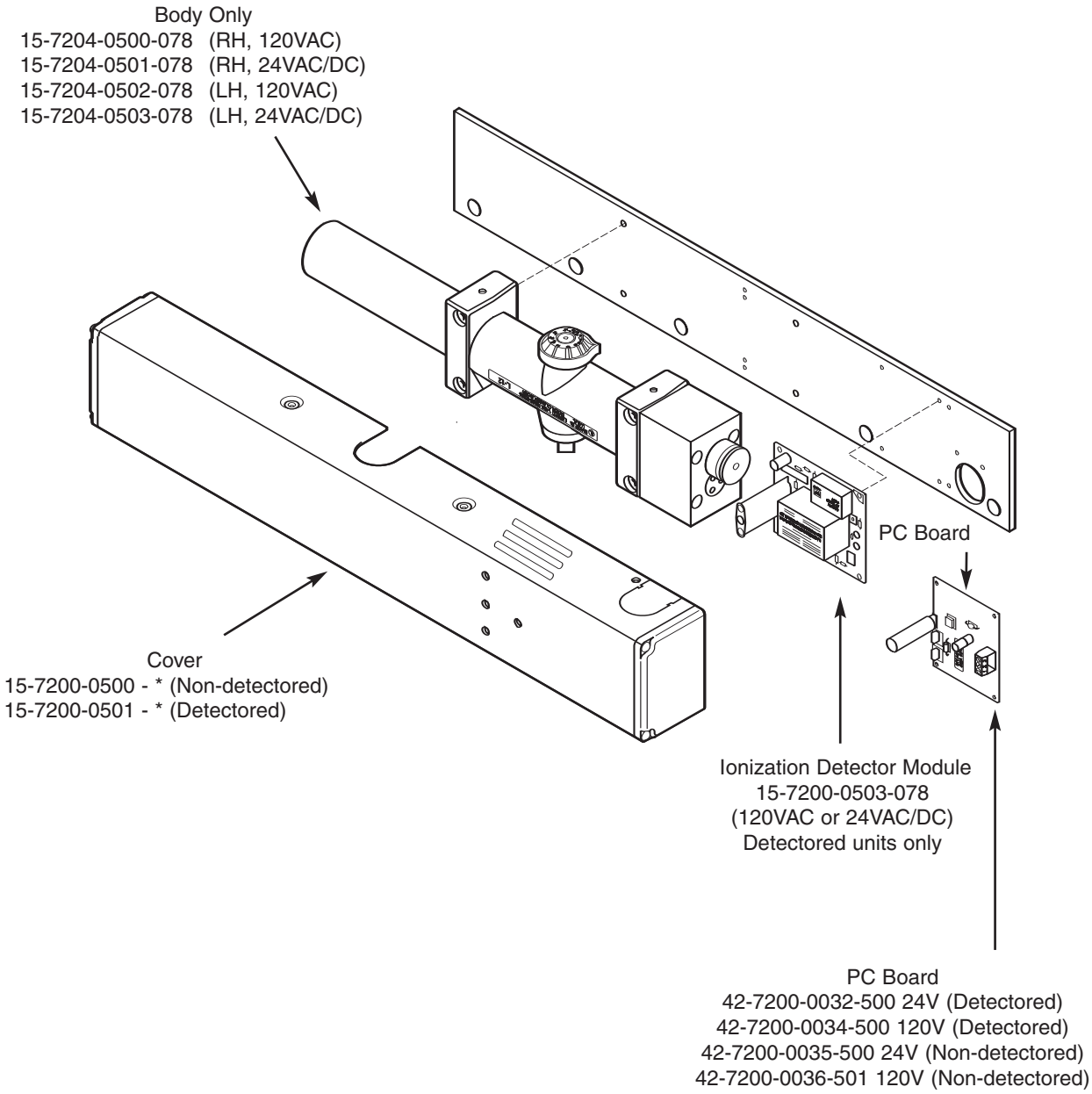

SMOK-CHEK® VI

Sex Bolt Package
*15-7200-0382-**

** specify finish*

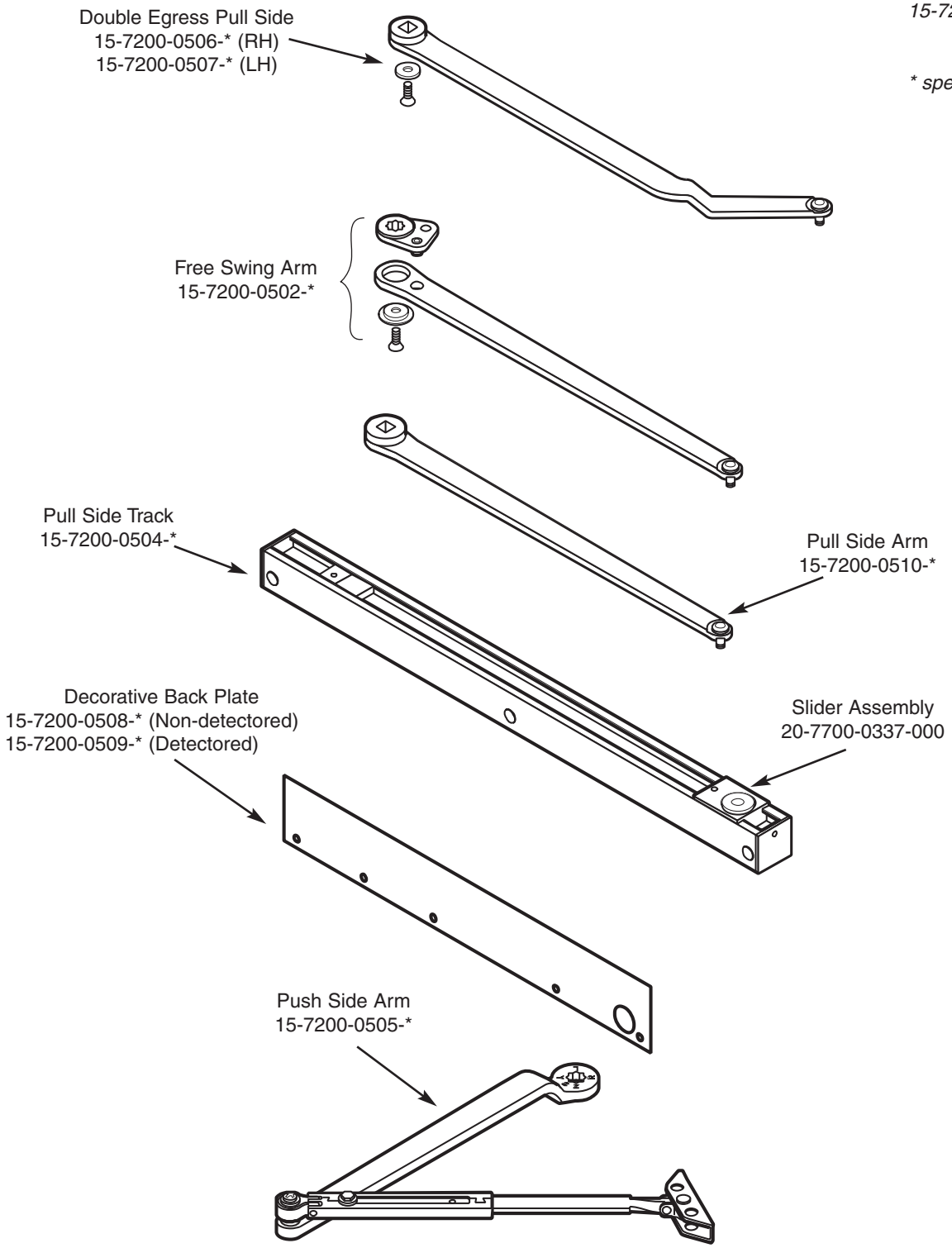

Quick Reference of Options

Reference

Sample

FS	6PULL	I	689	120	LH
Special Arm	Model	Hold Open	Finish	Voltage	Hand

Special Arm

FS	Free Swing Arm (Pull side only)
DE	Double Egress Arm (Pull side only)

Model

6	Detectored
4	Non-detectored
PULL	Hinge Side Mount
PUSH	Stop Side Mount

Type of Hold Open

I	Infinite Hold Open (Option)
S	Selective Hold Open (Standard)

Finishes

689	Aluminum
690	Dark Bronze
691	Light Bronze
696	Gold

Voltage

Detectored	120VAC
	24VAC
	24VDC
Non-detectored	120VAC
	24VAC/DC

Hand

RH	Right Hand
LH	Left Hand