RIXSON®

Automatic Door Opener

Designed for

Aluminum, Hollow Metal,

Wood Doors

and Frames

Introduction

When exterior wind pressures or security issues arise and a floor closer is the best way to close a door but lighter opening forces are desired, the Rixson® 2900 Automatic Opener is the perfect solution.

Low energy operators are not designed for high traffic or heavy doors because the mechanical closings inside are not strong enough to control the door.

By using a *Rixson* heavy-duty floor closer (existing or new installation) along with a *Rixson* 2900 door opener, there is no need for the extra expense of a high energy operator.

There is no special templating for either the floor closer or the operator.

Contents

	Page
Automatic Door Opener: General Information	**208**
Overview	209
Standard & Drop Applications	210-211
Architectural Specifications	212
Technical Details	213-214
Accessories	215-216
Parts List	217
Quick Reference of Options	218

2900 Low Energy Automatic Door Opener

Overview

The Rixson® 2900 is a "low energy" power door operator designed to automatically open and close doors with a lower energy opening force.

The American with Disabilities Act (ADA) is a law administered by the U.S. Department of Justice. Its guidelines under ADA Regulation for Title III are detailed on the ADA website: www.ada.gov.

The *Rixson* 2900 aids in complying with ADA and ANSI A156.19 requirements. It functions using an A/C motor and hydraulic pump to activate a heavy-duty floor closer controlled by an Electronic Limit Switch (ELS) circuit board. The *Rixson* 2900 is your best choice in a low energy power door operator with its:

Ease of installation and setup
- Simple instructions
- Uses push-button settings for door open and door close positions

Application versatility and ease of adjustment
- Push side or pull side mounting units available
- Interfaces with electric hardware and integrates with access control systems

Allows the floor closer to act normally during close cycles or if power is turned off
- Critical for fire-rated doors
- Springs force provides the feel of a normal manual door closer
- Door can be opened manually if desired

Operation startup options
- Wall switches
- Motion sensor
- Radio frequency device
- Push and Go

Hold Open options
- 0-30 seconds (5 seconds minimum required for ADA and ANSI A156.19)
- Choice of indefinite hold open features

Obstructed Detection
- Door closes if it hits an obstruction while opening
- Door re-opens once if it hits an obstruction while closing

FUNCTIONS
- Push Side or Pull Side Applications
- Power Assist selector switch
- Push and Go selector switch
- Open/Close Obstruction Detection
- Motor startup delay adjustment
- Vestibule Function Delay adjustment (For sequencing two or more units)
- Door Hold Open Delay adjustment
- Single Pole Double Throw (SPDT) Relay Output
- SPDT Relay Output time adjustment
- SPDT Alarm Output
- Blow Open Function for Smoke Ventilation
- Infinite Hold Open function
- Presence Detector Input
- 24 VDC @ 500 mA output
- Selector Mode Switch (3 position)
  - ❑ OFF – Turns unit off
  - ❑ ON – Turns unit on
  - ❑ HOLD OPEN – Activates the unit to the hold open position indefinitely

Electrical Data
- Power Input 120 VAC, 60 Hz (+10%, -15%)
- Current Draw 2 amp
- Auxiliary Output 24 VDC @ 500 mA
- SPDT relay output for controlling electric strikes or electric locks not to exceed 1 amp @ 30 VDC

Certifications
- Americans with Disabilities Act (ADA)
- BHMA 156.19 for Low Energy and Power Assist operated doors

Standard Applications

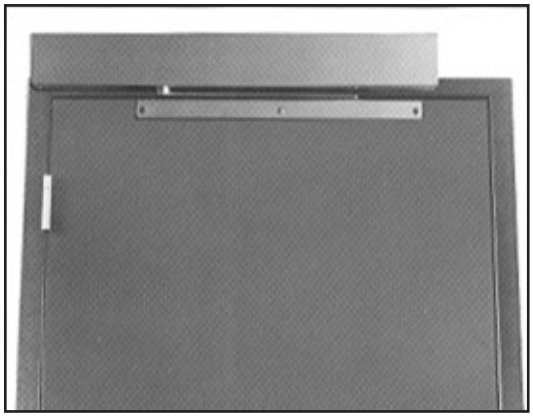

2920/2925

Hinge (Pull) Side of Door
- Spring-buffered stop assembly in slide track

2920 Rigid Arm and Slide Track
- 1/8"(3mm) maximum frame reveal

2925 Double Egress Arm and Slide Track
- From 1/8" to 3"(3 to 76mm) frame reveal
- Specify hand when ordering

(Click here to view 2920 template)

(Click here to view 2925 template)

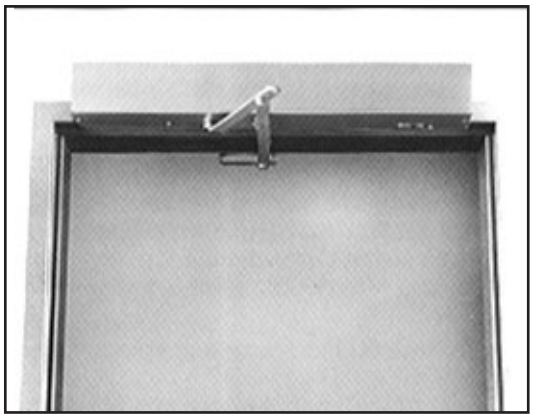

2910/2915

Stop (Push) Side of Door

Heavy-Duty Double Lever Arm
- Maximum frame reveals as charted
- Spring-buffered stop in arm shoe assembly

SERIES	REVEAL RANGE	
2910	2-1/4" to 4-3/4"*	(57 to 121mm)*
2915	4-13/16" to 7-3/8'	(122 to 187mm)

* Reveals less than 2-1/4"(57mm) may be achieved by field cutting the adjusting rod

NOTE: Door opening degree determined by floor closer.

(Click here to view template)

Drop Applications

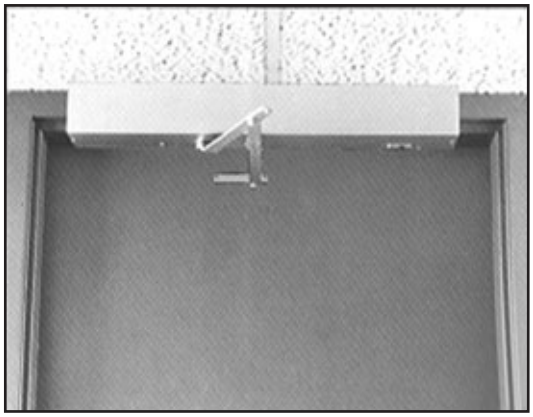

LH Shown

2910-D/2915-D

Stop (Push) Side of Door

Heavy-Duty Double Lever Arm
- Maximum frame reveals as charted
- Spring-buffered stop assembly in arm shoe

SERIES	REVEAL RANGE	
2910-D	2-1/4" to 4-3/4"*	(57 to 121mm)*
2915-D	4-13/16" to 7-3/8'	(122 to 187mm)

* Reveals less than 2-1/4"(57mm) may be achieved by field cutting the adjusting rod

NOTE: Contact factory for use on doors exceeding 250 lbs.

(Click here to view template)

Standard Applications

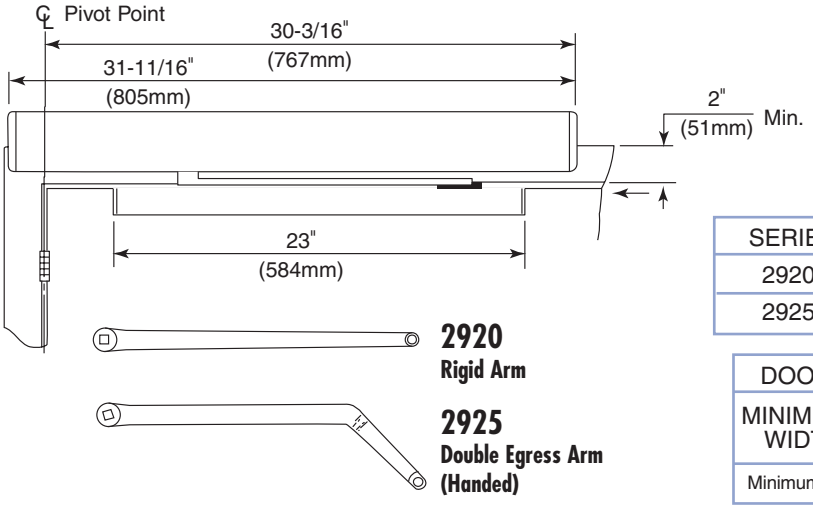

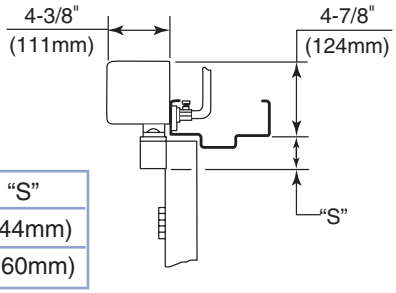

SERIES	DIM "S"
2920	1-3/4"(44mm)
2925	2-3/8"(60mm)

DOOR SWING	85°	90°	95°	100°	105°
MINIMUM DOOR WIDTH (mm)	32" (813)	31" (787)	30" (762)	30" (762)	29" (737)
Minimum door width for all double egress applications is 29"(737mm).					

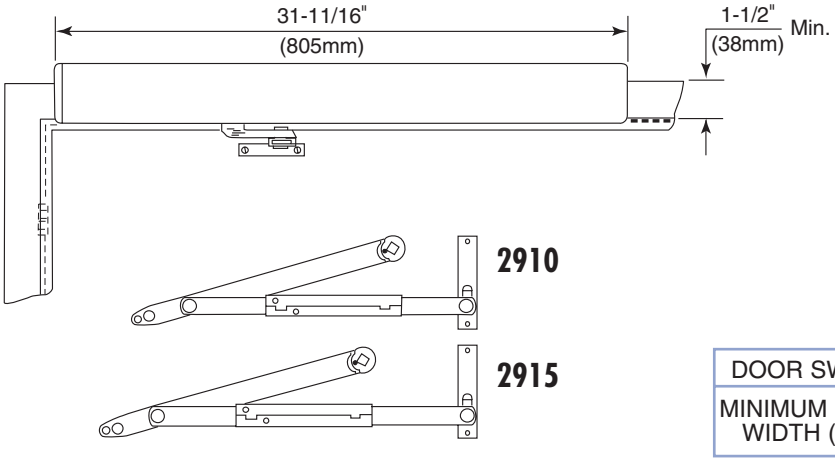

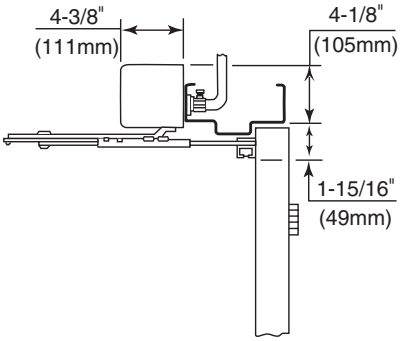

DOOR SWING	85°	90°	95°	100°	105°
MINIMUM DOOR WIDTH (mm)	34" (864)	33" (838)	33" (838)	32" (813)	32" (813)

Drop Applications

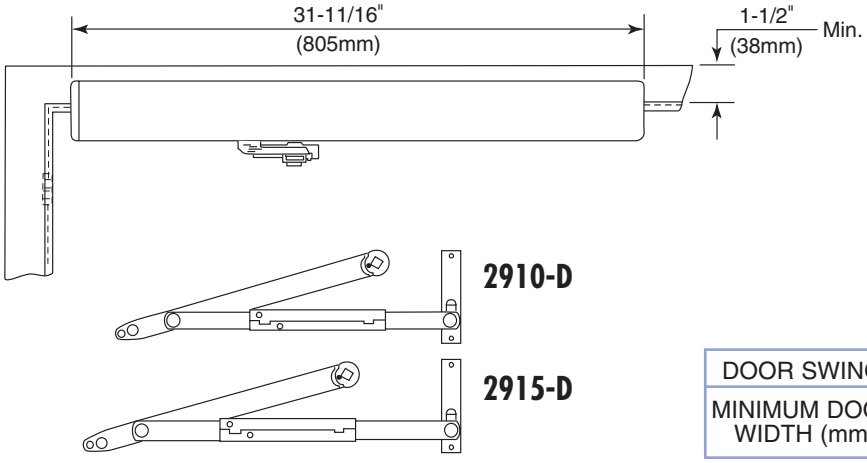

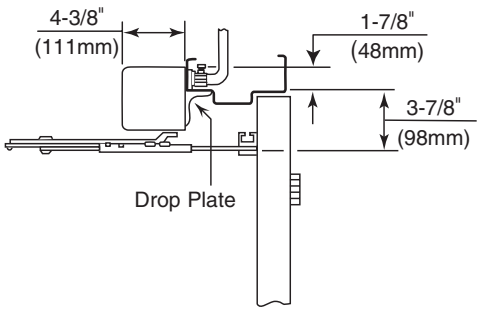

DOOR SWING	85°	90°	95°	100°	105°
MINIMUM DOOR WIDTH (mm)	36" (914)	35" (889)	34" (864)	34" (864)	33" (838)

Specifications

Heavyweight high-traffic doors that require automatic opening shall use the low energy operator in conjunction with a heavy-duty floor closer. Operator shall be for opening of door only.

Door shall be installed in the floor and shall have separate and independent closing speeds with back check turned to lightest setting.

Door controls (interior/exterior) for swinging doors shall be low energy operators. Door closing force shall be adjustable to ensure adequate closing control. Door operator shall have an adjustable backcheck feature to cushion the door opening speed if opened violently. Low energy operation to cycle the door open as controlled by the body/pump and motor assembly adjustments. Power operator unit shall provide conventional door closer opening and closing forces unless the power operator motor is activated by an initiating device. Motor assist shall be adjustable from 0 to 30 seconds in 5 second increments. Motor assist shall restart the time cycle with each activation of the initiating device. Unit shall have a three-position selector mode switch that shall permit unit to be switched “ON” to monitor for function activation, switched to “H/O” for indefinite hold open function or switched to “OFF,” which shall deactivate all control functions but will allow standard door operation by means of the internal mechanical closer. Door control shall be adjustable to provide compliance with the requirements of the Americans with Disabilities Act (ADA) and ANSI standards A117.1 and A156.19.

All operators shall meet UL, cUL, UL10c and UL10B standards. All operators are to be fire rated. All operators to have push and go function to activate power operator or power assist function. All operators to have push button controls for setting door close and door open positions. All operators to have open obstruction detection and close obstruction detection built into the unit. All operators to have door closer assembly with adjustable spring size, backcheck valve, sweep valve, latch valve, speed control valve and pressure adjustment valve to control door closing. All operators to have motor start-up delay, vestibule interface delay, electric lock delay and door hold open delay up to 30 seconds. All operators shall close door under full spring power when power is removed. All operators to have inputs for smoke ventilation doors, which allow doors to power open upon fire alarm activation and hold open indefinitely or until fire alarm is reset. All operators to have a presence detector input to prevent a closed door from opening or a door that is fully opened from closing. All operators to have a hold open toggle input to allow remote activation for indefinite hold open; door closes the second time the input is activated. All operators to have vestibule inputs to allow sequencing operation of two units. All operators to have a 24 VDC @ 500 mA output for controlling electric strikes, electromagnetic locks or radio frequency receivers. All operators to have an SPDT relay for interfacing with latch retraction exit devices, electric strikes, etc. All operators to be hard wired with power input of 120 VAC@60HZ

Note: For further detailed specification data, consult our website, www.rixson.com.

TECHNICAL DETAILS

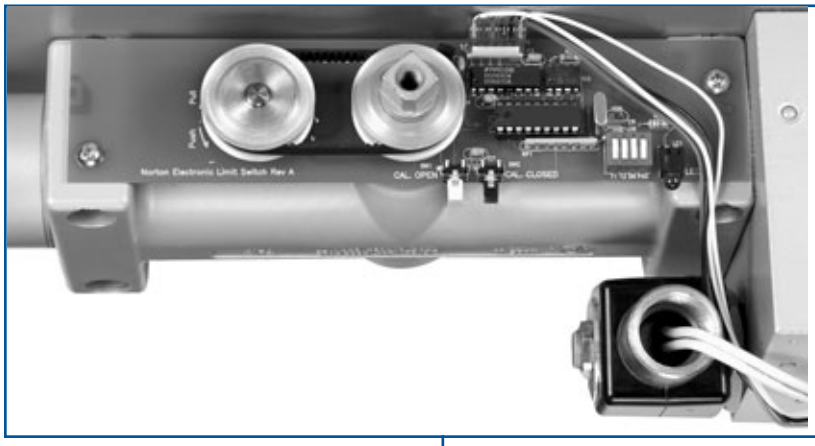

ELS - Electronic Limit Switch:

Used for open/closed door setting, Push and Go selection, obstruction timing and Power Operator/Power Assist Function.

- WHT Button - Used for Door Open setting
- BLK Button - Not used

Dip Switch Settings

1 - Obstruction Detection Delay
2 - Obstruction Detection Delay
3 - Aviation Mode (Push and Go)
4 - Power Assist/Power Operator Mode

See Close-up on pg 214

SW1 Dip Switches

1 - P/A - Door Operator Function Switch - OFF position selects Operator Mode. ON position selects the Assist Mode.

2 - A/D - Alarm Delay Timer - OFF = 30 second delay. ON = 60 second delay. Used with terminal JP1-1

3 - Not used - OFF

4 - Not used - OFF

Timer Adjustments

- SW2 - Motor Delay - Delays motor start-up to allow unlocking of electric hardware.
- SW3 - Solenoid Delay - Sets the length of time that the relay will stay energized or de-energized. Used for JP4-3, 4 and 5 relay. Allows electric hardware to stay energized long enough for automatic door opening.
- SW4 - Vestibule Delay - Sets the length of time between receipt of the IN Vestibule signal and the motor start-up.
- SW5 - Hold Open Delay/Assist Delay - Sets length of time door holds open at the fully open position for operator function. Sets length of time motor and pump assembly will operate to reduce opening force of door for assist function. When time elapses the door will operate as a standard door closer.

TECHNICAL DETAILS

2900 Control Board JP-1 Terminal: (Input Controls) - wall switches, motions sensors, 2nd *Rixson* 2900, etc.

1 - O/O - Override Open - Input for blow open or smoke ventilation application - Upon initiation of a closed signal from a fire/smoke alarm panel, the door will open and remain open until signal is terminated. Use with any JP-1 ground.

2 - RES 1 - Not used

3 - AUX2 - Auxiliary Two - This is one of two secondary initiating switch input contacts (JP-10 is the other.) Use with any JP-1 ground to initiate operation.

4 - GND - Ground

5 - INV - IN Vestibule - Used for vestibule function. This contact must be connected to the JP-1-6 terminal from another unit to receive an initiating signal. Use this contact with any JP-1 ground.

6 - OUTV - Out Vestibule - Used for vestibule function - This contact must be connected to terminal JP-5 of another unit to send an initiating signal. Use this contact with any JP-1 ground.

7 - GND - Ground

8 - RFT - Toggle (Maintained Hold Open) This input can be used with any normally open switch. The first initiation of this contact will open door and hold it open. A second initiation of this contact will release and close the door. Use with any JP-1 ground.

9 - GND - Ground

10 - AUX2 - Auxiliary Two - Same as JP1-3 above.

11 - GND - Ground

12 - PDET - Presence Detector - Permits wiring of a sensor to prevent a closed door from opening or a door that is fully open from closing. Use with any JP-1 ground.

13 - GND - Ground

14 - AUX1 - Auxiliary One - Primary initiating switch contact. Initiates door power cycle. For vestibule function, the switch on the initiating side of door is connected to this terminal. Use with any JP-1 ground.

JP-4 Terminal: (Output Controls) - electric strikes, latch retraction exit devices, mag locks, etc.

1 - GND - Ground

2 - +24VDC

3 - NO1 - Relay Contact - Normally open relay dry contact that is switched when any auxiliary inputs are initiated. Delay can be set for up to 12 seconds. Use with JP4-4 CO-1.

4 - CO1 - Relay Contact - Common relay contact for use with terminals JP4-3 and JP4-5.

5 - NC1 - Relay Contact - Normally closed relay contact that is switched when any auxiliary inputs are initiated. Delay can be set for up to 12 seconds. Use with JP4-4 CO1.

6 - NO2 - Alarm Delay - Normally open dry relay contact that is switched when any auxiliary inputs are initiated. The relay will stay switched for 30 or 60 seconds (selected by dip switch SW1-2 A/D).

7 - CO2 - Alarm Delay - Common contact for use with terminals JP4-6 and JP4-8.

8 - NC2 - Alarm Delay - Normally closed dry contact that is switched when any auxiliary inputs are initiated. The relay will stay switched for 30 or 60 seconds (selected by dip switch SW1-2 A/D).

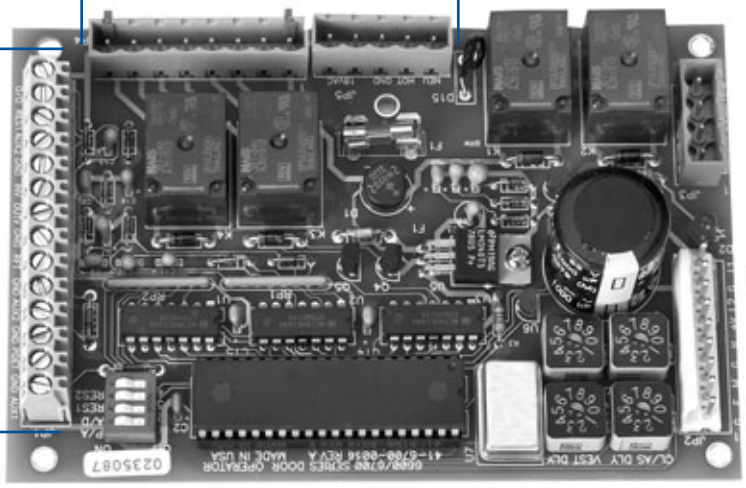

ACCESSORIES

#29679 Operational Signs (kit contains 10 signs)
(Packaged with unit) – Supplied with 2900 Operator

#29425 (1 per)

#29426 (1 per)

#29427 (2 per)

#29431 (1 per)

#29428 (2 per)

#29681 Signage Kit
(Packaged with 29661, 29662, 29669, 29673, 29675, 29684, 29685, 29686 switches)

#29429 (1 per switch)
Supplied with wall switches

#29682 Signage Kit
(Packaged with 29660, 29672, 29674, 29676 switches)

#29432
(1 per switch)

#29433
(1 per switch)

Motion Sensor #29663

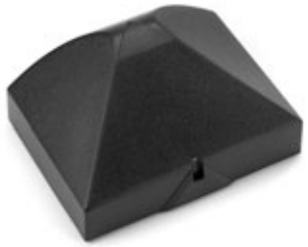

- Uni-directional
- Black cover
- SPDT relay
- Adjustable angle pattern
- 24 VDC input
- Must not be placed where motion of door can be sensed

Switch Post #29677

- 5" square steel 1/8" wall thickness
- Durable exterior grade powder coat 42" high
- Finish in gray or dark bronze. Specify when ordering
- Standard formed plastic cap
- Surface mounted (above ground)
- Radio Frequency Transmitter included (4" x 4" face plate)

Switch Post #29678

- 5" square steel 1/8" wall thickness
- Durable exterior grade powder coat 42" high
- Finish in gray or dark bronze. Specify when ordering
- Standard formed plastic cap
- Surface mounted (above ground)
- Switch included (4" x 4" face plate)

Miscellaneous Parts

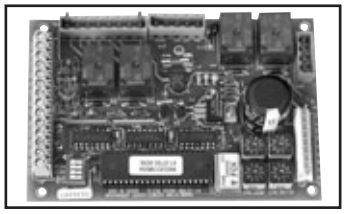
#296700PCB - Control Board

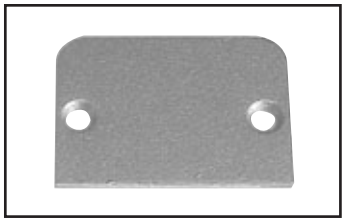
#29668 Security Plate - Conceals the ON/OFF/HOLD OPEN switch to deter tampering. Packed standard with the *Rixson* 2900.

Note: For additional accessories consult factory.

ACCESSORIES

Activating Door Switches

29660 **29661**

29660, 29661
4" x 4" Face Plate
- 4-1/2" x 4-1/2" SS Back Plate
- 15 amp @ 125 VAC
- Flush Mounted – Hard Wired
- Fits single or 2 gang electrical box
- **29660 -** Stainless Steel with Black Letters
- **29661 -** Blue Powder Coat with White Letters

29669

29669, 29684, 29685, 29686
6" x 6" Face Plate
- Stainless Steel with Blue Letters
- 29669 - Flush Mounted - Wireless used with RF1 option and 29671 kit

* Requires that the unit be equipped with Radio Frequency Receiver (RF1 suffixed units) or purchased with a 29671 conversion kit.

29662 **29672**

29662, 29672
1-11/16" x 4-1/2" Face Plate
- 1-11/16" x 4-1/2" Back Plate
- SPDT UL listed Switch-Mom.
- 15 amp @ 125 VAC
- Fits 1 -3/4" Frame
- **29662 -** Blue Powder Coat with White Letters
- **29672 -** Stainless Steel with Black Letters

Note: All hard wired switches are Momentary Contact SPDT, UL Listed.

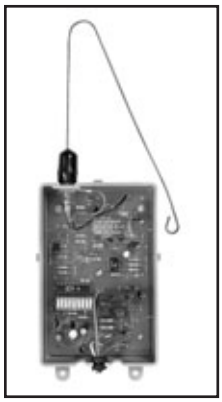

RF1 - Radio Frequency Option
A Radio Frequency receiver used to control the *Rixson* 2900 from a remote location. Wireless. Requires the 666 (supplied) or 669 optional accessories (Factory wired and mounted).

29671 - Radio Frequency Option
A Radio Frequency receiver used to control the *Rixson* 2900 from a remote location. Wireless. Requires the 666 (supplied) or 29669 optional accessories (Field installed).

29666 - Hand Held Transmitter: Used with RF1 Radio Frequency Option or 29671 RF1 Kit. (2-3/8"w x 3-5/8"h x 7/8"d)

29683 - Key Fob Transmitter: Used with RF1 Radio Frequency Option or 29671 RF1 Kit. (1-1/2"w x 2-3/16"h x 9/16"d)

PARTS LIST

Body Pump and Motor Assemblies

292LAP-R (2920, 2925)
291LAP-R (2910, 2915)
Right Hand Body Pump and Motor Assembly

292LAP-L (2920, 2925)
291LAP-L (2910, 2915)
Left Hand Body Pump and Motor Assembly

Body, Pump, Motor, with ELS

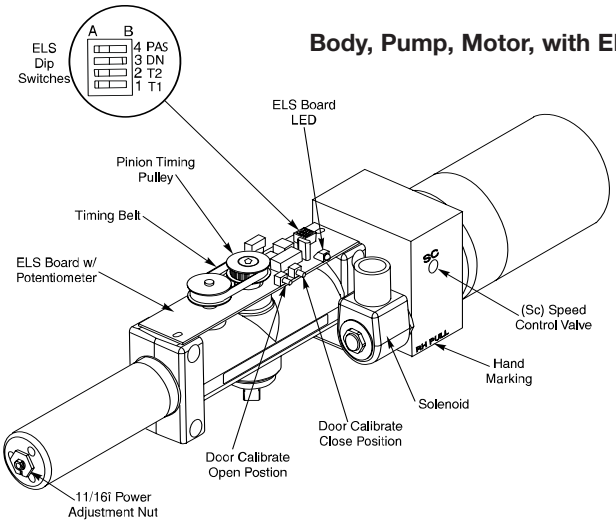

Arm and Track Assemblies

#296650-1L
Arm and Track Assembly (LH)
#296650-1R
Arm and Track Assembly (RH)
#297250-1L
Arm Assembly (LH)
#297250-1R
Arm Assembly (RH)
#296610-1T
Track Assembly

#296660-1
Arm Assembly
#296660-11
Rod & Snubber Assembly

#296670-1
Arm Assembly
#296670-11
Rod & Snubber Assembly

Drop Bracket 41-6700-4040-075

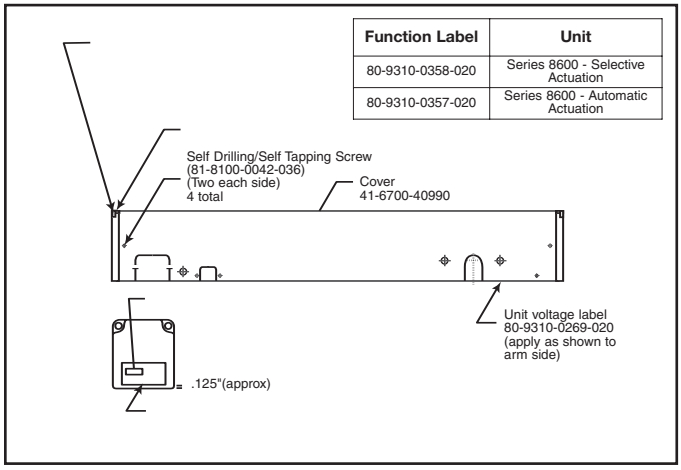

Function Label	Unit
80-9310-0358-020	Series 8600 - Selective Actuation
80-9310-0357-020	Series 8600 - Automatic Actuation

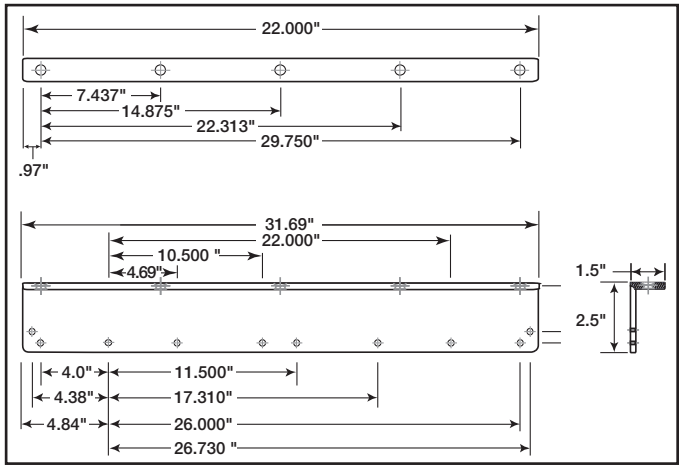

HOW TO ORDER

29 | 2 | SUFFIXES | X FINISH

FIRST TWO DIGITS
Product Series

THIRD & FORTH DIGIT
Identifies Type of Application

HINGE (PULL) SIDE OF DOOR

20 – Rigid Arm & Slide Track
110° Maximum Door Swing
Maximum Reveal 1/8"(3mm)

25 – Double Egress Arm & Slide Track
110° Maximum Door Swing for
Reveals 1/8" to 3"(3 to 76mm)
(Specify hand when ordering)

STOP (PUSH) SIDE OF DOOR

10 - Heavy-Duty Double Lever Arm
110° Maximum Door Swing Reveals
2-1/4" to 4-3/4"(57 to 121mm)

15 - Heavy-Duty Double Lever Arm
110° Maximum Door Swing Reveals
4-13/16" to 7-3/8"(122 to 187mm)

Models will be power operated to 110° but can be manually opened to 180°, depending upon floor closer limit at arm.

SUFFIXES (options)

RF1 – Radio Frequency Control
- Factory Wired
- Requires 666, 669, 683, 684 or 677 switches to operate (order separately)

D – Drop Application for less than 5" minimum ceiling clearance.

FINISHES
Product will be sprayed with a combination of waterborne acrylic and polyester powder coat. Closers will withstand 100 hours of salt spray.

Description	Specify New *Rixson* Designation (BHMA)	Old *Rixson* Designation
Aluminum	689	SA
Statuary Bronze	690	SB
Dull Bronze	691	SLB
Black	693	US15
Gold	696	GB

Note: Door switches and sensors are not included with the 2900 Door Operator. These items must be ordered separately.