RIXSON®

Electromagnetic Door Releases

Door Control

for Fire and Smoke Barrier Doors

and Other Remote Door Release

Applications

Introduction

Rixson® electromagnets are designed for virtually any remote door release application. They are primarily used to hold fire and smoke barrier doors open until released by a remote smoke detector or other switching device. The complete assembly consists of an armature contact plate with adjustable pivot mounting for installation on the door, and a heavy-duty electromagnet mounted on the wall or floor behind the door. A separate closing device is required.

Features

- 25 to 40 pounds holding power
- Fail-safe operation; power failure releases door to close
- Positive Release Button initiates closing motion
- Two-year warranty
- Multi-voltage on specific coil models
- Magnet protected against transients and surges up to 600 volts (AC models)

Code Listings

- Underwriters' Laboratories, Inc.
- Underwriters' Laboratories of Canada
- California State Fire Marshal
- ANSI/BHMA 156.15

Finishes

- 689 Sprayed Aluminum (SA)
- 690 Sprayed Dark Bronze (SB)
- 691 Sprayed Light Bronze (SLB)
- 696 Sprayed Gold (SG)

Contents

Contents	Page
General Information	**176**
Features	176
Code Listings	176
Finishes	176
Installation	176
Models 980 & 981	177
Models 989 & 990	178
Models 991 & 993	179
Models 996 & 997	180
Models 998 & 999	181
Schematics & Accessories	**182**
Models 972/973	183
Model 975	184
Smoke Detectors	185
Parts Drawings	**186-189**
Quick Reference of Options	**190**

Installation

- Install where required by code, where doors may be used to confine smoke or fire, or wherever remote control or automatic closing doors are required.
- Be sure door hardware and trim projections are compatible with total projection of door release.
- Anchor the electromagnet firmly since the wall portion will function as a door stop.
- Locate magnet approximately 6 inches in from lock edge of door. Wall magnets should be mounted approximately 2 to 4 feet above the floor for optimum performance.
- Door-mounted contact plate includes hardware for through-bolting or concealed mounting.
- Spotting template included with unit ensures correct alignment.
- 14AWG. Max. Wire Size.

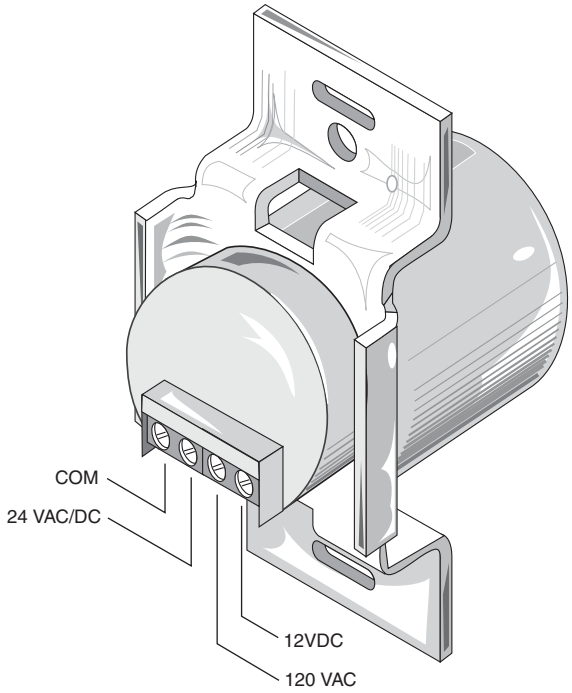

Triple-voltage coil makes installation and ordering simple chores. One magnet can receive 12 VDC, 24 VAC/DC and 120 VAC. There are no wires leading from the coil, only a terminal strip. This coil draws fewer amps than conventional magnets. Available on most models. See the symbol next to the model number in the catalog.

MODEL 980

Application
Floor Mount
Single Door
C00021

Product Description & Features
- Concealed Wiring
- Total Floor Space Required: 6-5/8"(168mm)
- Mounting Requirements: Conduit connects directly to floor plate
- UL listed door holder

Technical Information
- Voltage and Current:
  150 VAC, 60 Hz., .020 amp
  50 VAC/DC, 60 Hz., .020 amp
  200 VDC, .040 amp

  250 VAC, 50/60 Hz., .009 amp
- Shipping Weight: 4 lbs. (1.8 kg)

Note: Two Templates Required (Click here to view template 1)

(Click here to view template 2)

Technical Information

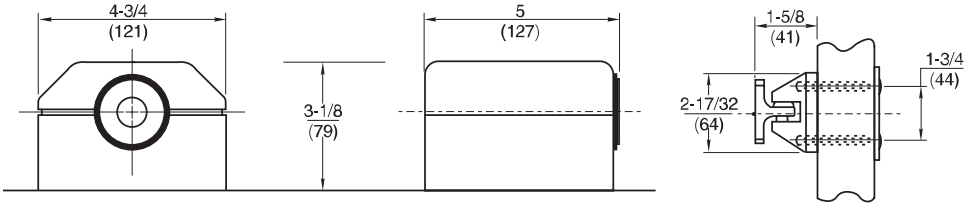

MODEL 981

Application
Floor Mount
2 Back-to-Back Doors
C00031

Product Description & Features
- Concealed Wiring
- Total Projection: 8-1/4"(210mm)
- Mounting Requirements: Conduit connects directly to floor plate
- UL listed door holder

Technical Information
- Voltage and Current:
  120 VAC, 60 Hz., .040 amp
  24 VAC/DC, .040 amp
  12 VDC, .080 amp

  250 VAC, 50/60 Hz., .018 amp
- Shipping Weight: 4-3/4 lbs. (2.2 kg)

Note: Two Templates Required (Click here to view template 1)

(Click here to view template 2)

Technical Information

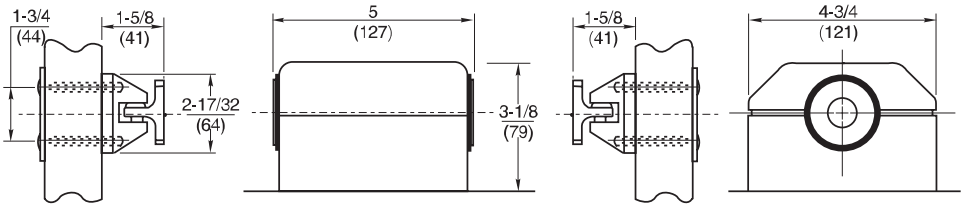

MODEL 989

Application
Wall Mount
Low Profile
Concealed Wiring

Product Description & Features
- Total Projection: 7/16"(11mm)
- Mounting Requirements:
  2" x 4" x 2-1/2"(51 x 102 x 64mm) outlet box
- Wall must be properly reinforced and outlet box adequately fastened
- UL listed door holder

Technical Information
- Voltage and Current:
  120 VAC, 60 Hz., .020 amp
  24 VAC/DC, 60 Hz., .020 amp
  12 VDC, .040 amp

  250 VAC, 50/60 Hz., .009 amp

- Shipping Weight: 2 lbs. (0.9 kg)

(Click here to view template)

Technical Information

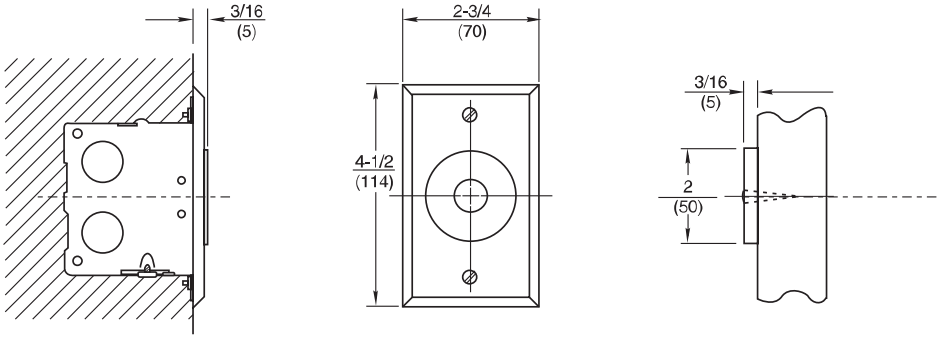

MODEL 990

Application
Wall Mount
Low Profile
Concealed Wiring

Product Description & Features
- Total Projection: 1-13/16"(46mm)
- Mounting Requirements:
  2" x 4" x 2-1/2"(51 x 102 x 64mm) outlet box
- Wall must be properly reinforced and outlet box adequately fastened
- UL listed door holder

Technical Information
- Voltage and Current:
  120 VAC, 60 Hz., .020 amp
  24 VAC/DC, 60 Hz., .020 amp
  12 VDC, .040 amp

  250 VAC, 50/60 Hz., .009 amp

- Shipping Weight: 2 lbs. (0.9 kg)

Note: Two Templates Required

(Click here to view template 1)

(Click here to view template 2)

Technical Information

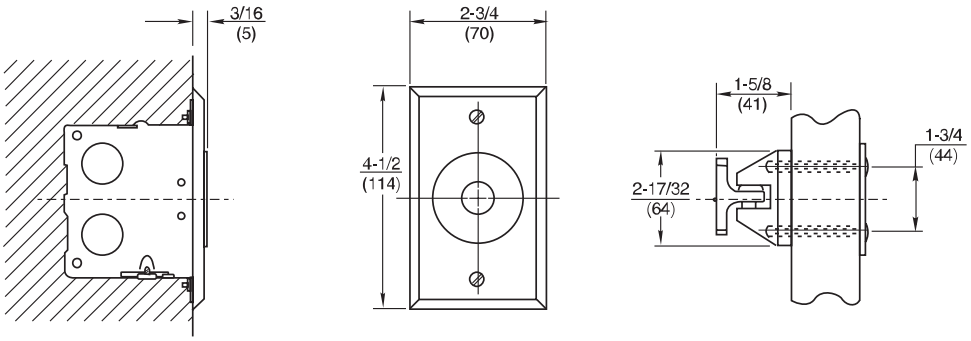

MODEL 991

Application
Wall Mount
Surface Wiring
Hazardous Locations

Product Description & Features
- Total Projection: 4"(101mm)
- UL listed door holder
- Approved for class I division 2, class II division 2, groups F and G and class III locations
- Unit includes a sealed surface-mounted junction box

Technical Information
- Voltage and Current:
  120 VAC, 60 Hz., .017 amp
  24 VAC, .080 amp
  12 VDC, .180 amp
  24 VDC, .068 amp
  250 VAC, 50/60 Hz., .009 amp
- Shipping Weight: 3 lbs. (1.4 kg)

Note: Two Templates Required

(Click here to view template 1)

(Click here to view template 2)

Technical Information

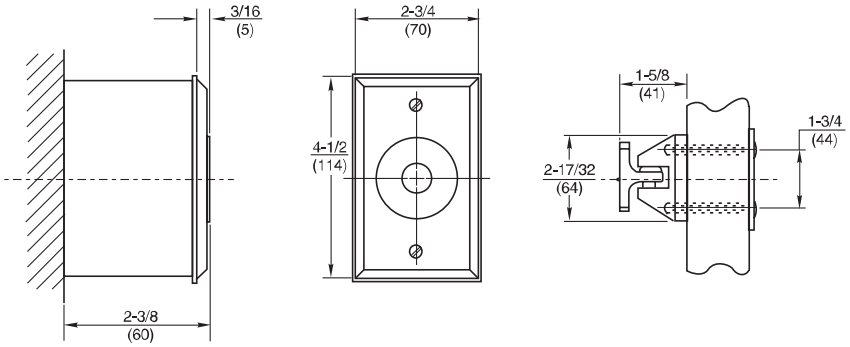

MODEL 993

Application
High Hold
Electromagnetic
Door Release

Product Description & Features
- 300 lb. holding force
- Armature plate through-bolted to maintain consistent contact with magnet
- Fail-safe operation; power failure releases door to close
- Two-year warranty
- 24 VAC/DC .25 amp wiring
- Adjusting screw on special heavy-duty armature allows for alignment of contact plate
- Push-button release on housing standard
- For no push button specify when ordering
- 9930 Floor mount available
- UL listed door holder

Technical Information
- Typical Usage: Surface Wiring
- Total Projection: 5-1/4"(133mm)
- Mounting Requirements:
  Switch Box Included
  4-1/2" x 4-9/16" x 2-5/16"
  (114 x 116 x 59mm) deep
- Voltage and Current:
  24 VAC/DC .25 amp
- Substantial wall reinforcement required
- Shipping Weight: 3 lbs. (1.4 kg)

(Click here to view template 1)

Note: Two Templates Req'd

(Click here to view template 2)

Technical Information

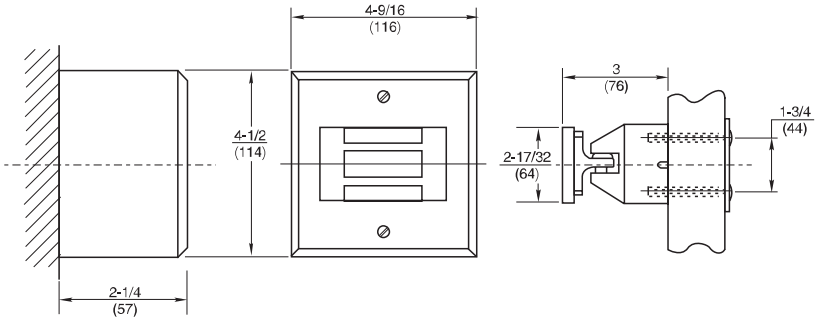

MODEL 996

Application
Wall Mount
Surface Wiring

Product Description & Features
- Total Projection: 4-1/8"(105mm)
- Mounting Requirements:
  1-1/2"(38mm) deep adapter housing
- UL listed door holder

Technical Information
- Voltage and Current:
  120 VAC, 60 Hz., .020 amp
  24 VAC/DC, 60 Hz., .020 amp
  12 VDC, .040 amp

  250 VAC, 50/60 Hz., .009 amp
- Shipping Weight: 3 lbs. (1.4 kg)

Note: Two Templates Required

(Click here to view template 1)

(Click here to view template 2)

Technical Information

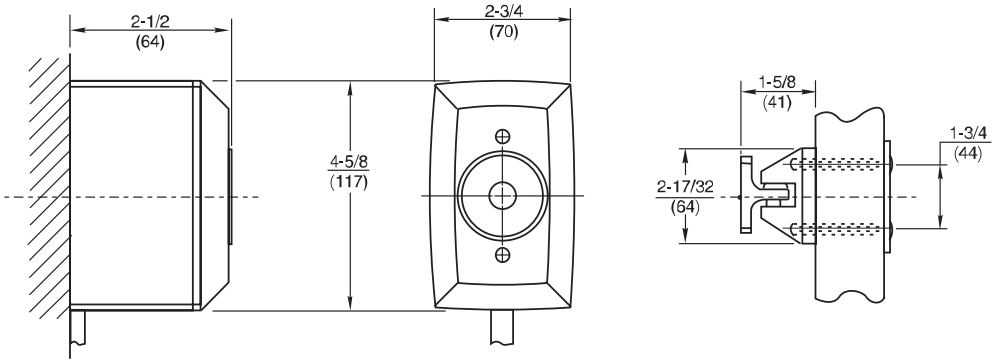

MODEL 997

Application
Wall Mount
Concealed Wiring

Product Description & Features
- Total Projection: 2-5/8"(67mm)
- Mounting Requirements:
  2" x 4" x 1-3/4"(51 x 102 x 45mm)
  outlet box
- Wall must be properly reinforced and
  outlet box adequately fastened
- UL listed door holder

Technical Information
- Voltage and Current:
  120 VAC, 60 Hz., .020 amp
  24 VAC/DC, 60 Hz., .020 amp
  12 VDC, .040 amp

  250 VAC, 50/60 Hz., .009 amp
- Shipping Weight: 2 lbs. (0.9 kg)

Technical Information

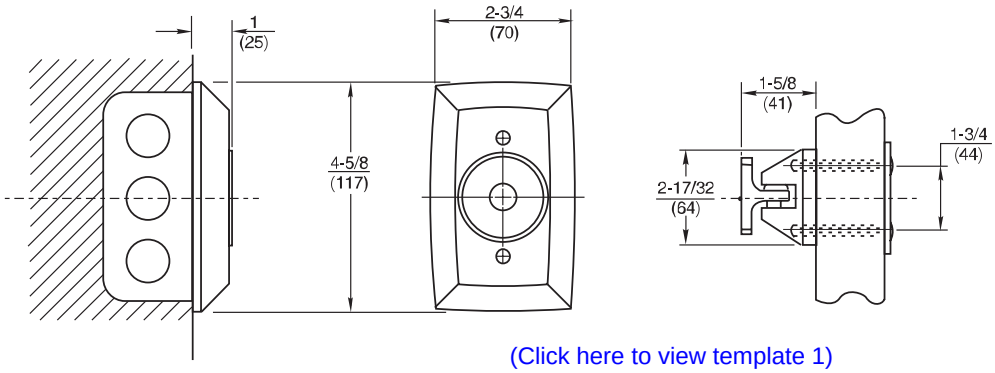

(Click here to view template 1)

Note: Two Templates Required

(Click here to view template 2)

MODEL 998

Application
Wall Mount
Standard Doors
Concealed Wiring

Product Description & Features
- Total Projection: 3-5/8"(92mm)
- Mounting Requirements:
  2" x 4" x 1-3/4"(51 x 102 x 45mm) outlet box
- Wall must be properly reinforced and outlet box adequately fastened
- UL listed door holder

Technical Information
- Voltage and Current:
  120 VAC, 60 Hz., .020 amp
  24 VAC/DC, 60 Hz., .020 amp
  12 VDC, .040 amp

  250 VAC, 50/60 Hz., .009 amp

- Shipping Weight: 2-1/2 lbs. (1.1 kg)

Note: Two Templates Required (Click here to view template 1)

(Click here to view template 2)

Technical Information

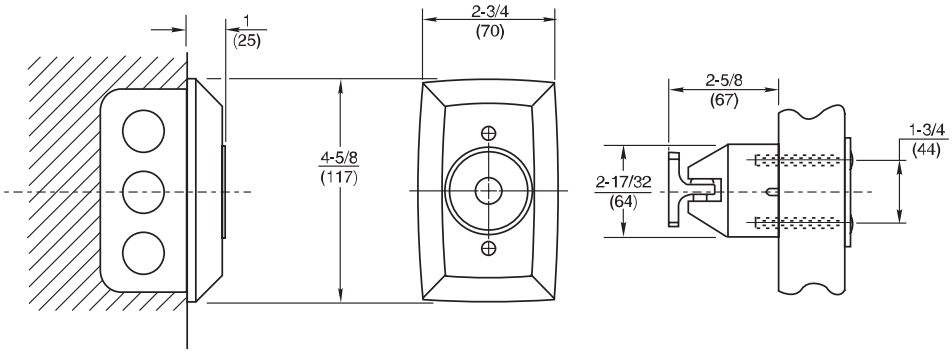

MODEL 999

Application
Typical Usage
Universal Mounting

Product Description & Features
- Base Plate; Concealed Wiring
- Total Projection: 4-3/8"(111mm)
- Mounting Requirements:
  2" x 4"(51 x 102mm) outlet box; 4"(102mm) square box; 4"(102mm) octagonal box
- Wall must be properly reinforced and outlet box adequately fastened
- UL listed door holder

Technical Information
- Voltage and Current:
  120 VAC, 60 Hz., .020 amp
  24 VAC/DC, 60 Hz., .020 amp
  12 VDC, .040 amp

  250 VAC, 50/60 Hz., .009 amp

- Shipping Weight: 2-3/4 lbs. (1.2 kg)

(Click here to view template 1)

Note: Two Templates Required

(Click here to view template 2)

Technical Information

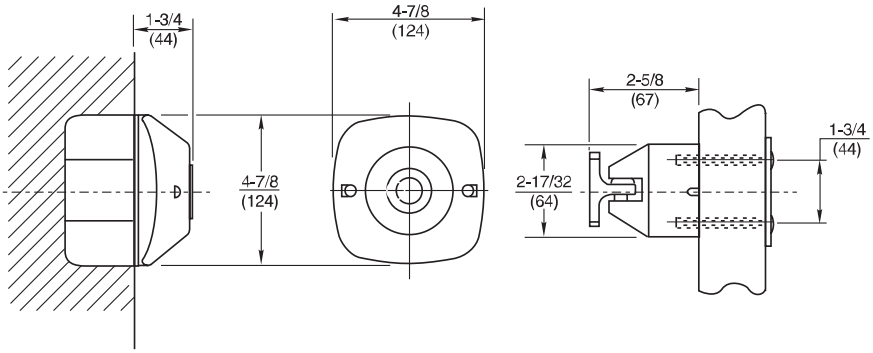

SCHEMATICS

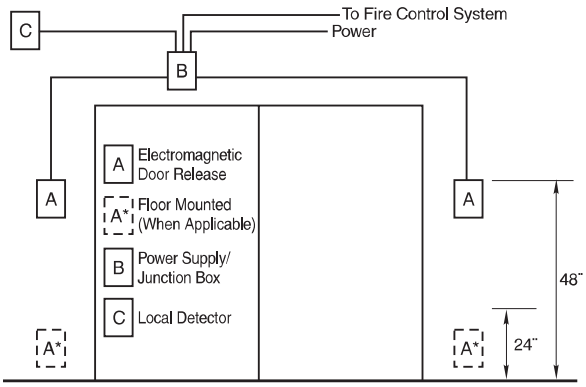

Operation Narrative

Doors are to be normally held open. The electromagnetic door releases will be energized with the voltage shown (at right) in the hardware set for this opening. Power shall be controlled by the fire control system. It will interrupt the power if alarmed, causing the doors to be released, thus allowing the door closers to close the doors. When power is restored the magnets will re-energize, permitting the doors to be manually returned to their held-open position.

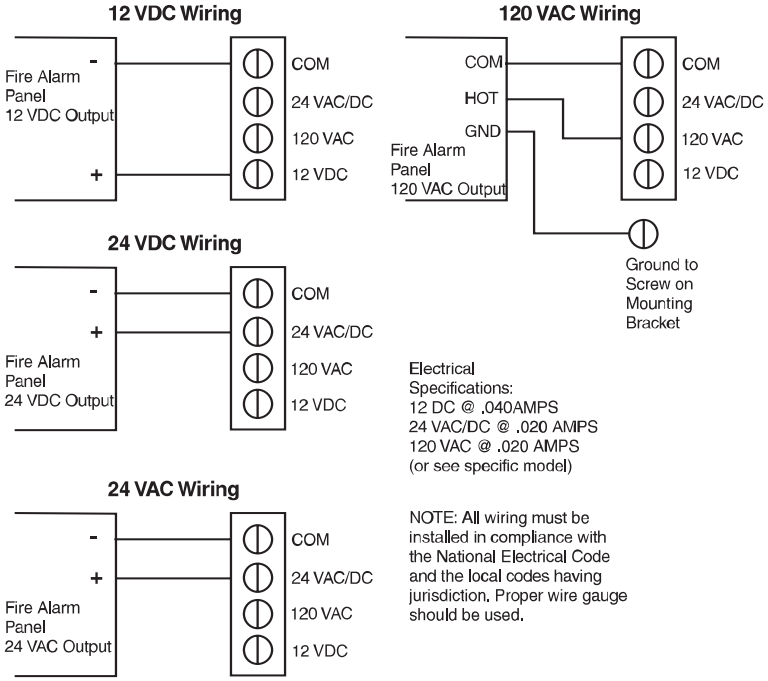

Electrical Specifications:
12 DC @ .040AMPS
24 VAC/DC @ .020 AMPS
120 VAC @ .020 AMPS
(or see specific model)

NOTE: All wiring must be installed in compliance with the National Electrical Code and the local codes having jurisdiction. Proper wire gauge should be used.

ACCESSORIES

XK996
Part# 996631-*
1-1/2"(38mm) Extension
(For Use Only with Models 997 & 998)
Mounts behind wall cover.

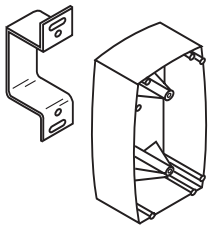

*specify finish
Do not use more than 10" projection off of face of door

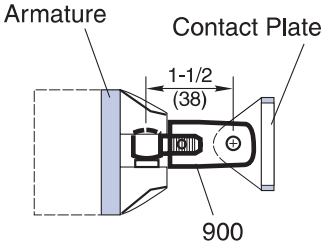

Part# 900
Base Unit Armature Extension
Mounts between existing armature and contact plate.

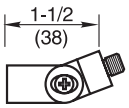

Part# 900-Z
Armature Extension 90° Bend

Extension pieces must be used in conjunction with 900 Base Unit

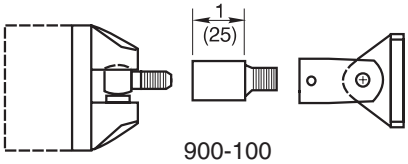

900-100

(Shown with part #900)

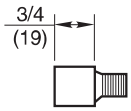

900-75

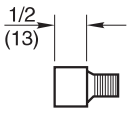

900-50

MODEL 972/973

Application
972H for Swinging Doors
972S for Sliding Doors
972U for Overhead Doors

Product Description & Features
• Rolling and other special applications

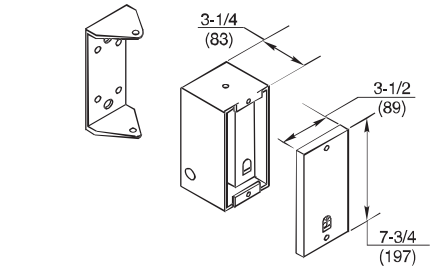

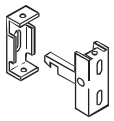

972H

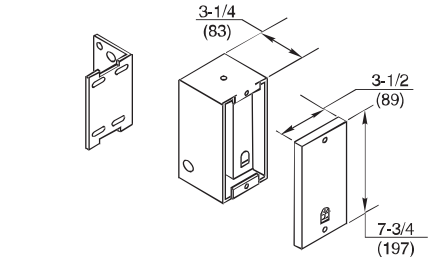

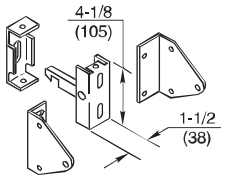

972S

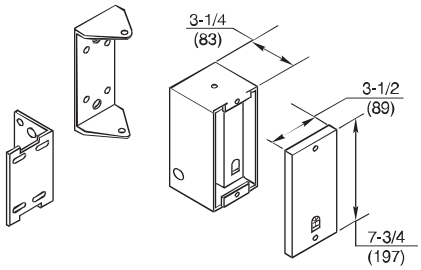

972U

Technical Information
• Voltage and Current:
120 VAC, 60 Hz., .150 amp
24 VAC, 60 Hz., .150 amp
24 VDC, .08 amp
12 VDC, .08 amp

• Shipping Weight: 5 lbs. (2.3 kg)

The Rixson® 972 Industrial Door Release is listed by Underwriters' Laboratories as a substitute for fusible links in such applications as overhead rolling doors, guillotine doors, fire dampers and self-closing windows. These heavy-duty units provide positive latching and automatic release when triggered by a smoke detector, manual pull station or other electrically operated switch.

The 973 door release is approved for use in Class 1, Division 2 hazardous locations when wired in accordance with NEC Article 500.

Product dimensions and templating product dimensions are identical to 972 series.

Features:
• Approximately 75 lb. (34 kg) holding power
• Fail-safe operation; power failure releases door to close
• Two-year warranty

Code Listings:
• Underwriters' Laboratories, Inc.
• Underwriters' Laboratories of Canada
• State of California (3550-047:13)

How to Order:
Specify model number and voltage. When ordering with 975 Time Delay, magnetic holder must be 12 VDC.

Shipping Weight:
5 lbs. (2.3 kg)

MODEL 975

975 Time Delay Control Unit
The 975 is a companion to the 972/973 industrial fire door holder which permits up to a 45-second delay in the activation of the Firemark® Industrial Fire Door Release. The 975 continues to hold doors open in the event of power failure or momentary power interruption, thereby preventing disruption of plant or factory routine.

Features:
- Power failure or alarm will initiate time-delay function
- Field-adjustable time delay, from 0 to 45 seconds
- Annunciation capability: Audible or visual indicator can be used to show that delay function is in effect
- Restoration of power, or alarm clearance, before time-delay setting has expired, permits uninterrupted operation of the 972 magnet holders
- Controls up to four (4) 972 magnet holders
- Test button allows check of delay function
- Case size 12" x 10" x 4"(305 x 254 x 102mm)
- Time-delay function operates through 12-volt gel-cell batteries, which are under continuous trickle charge from 120-volt power source
- One-year warranty

Code Listings:
- Underwriters' Laboratories, Inc. (UL)
- Underwriters' Laboratories of Canada
- State of California Fire Marshal (Listing No. 7470-047:100)

NOTE: California law permits time-delay devices on fire-door releases to operate *only* in the event of a power failure, and *not* in an alarm condition. (The 975 has California State Fire Marshal Approval.)

Voltage and Current:
120 VAC input/12 VDC output
.32 amps maximum

Shipping Weight:
8-1/4 lbs. (3.8 kg)

813 x 135

Photo-electronic Smoke Detector

Product Description & Features
- 120 VAC, 4-wire Photo-electronic detector with built-in 135° heat sensor
- Unique optical sensing chamber:
  - -Superior signal-to-noise ratio (2.0)
  - -Stable photo-electronic operation
  - -3.3% nominal sensitivity
  - -Built-in signaling process
- Temperature range: 0°C to 49°C, 32°F to 120°F
- Humidity range: 10% to 93%
- UL Listed
- Factory Mutual Approved

Technical Information
Electrical Information

Relay contacts –

Form A: 2.0A @ 30 VAC/DC

Form C: 2.0A @ 30 VAC/DC
.06A @ 110 VDC
1.0A @ 125 VAC

814 x 135

Identical to Model 813 x 135 except:
- 24 VDC, 4-wire

Nominal operating current:

24 VDC: 120 mA maximum
120 VAC: 75 mA maximum

9734

Ionization Smoke Detector

Product Description & Features
- 120 VAC, 4-wire ionization detector
- Unique unipolar dual sensor:
  - -Provides exceptional stability
  - -Factory preset at 1.5% nominal sensitivity
  - -Withstands wind gusts up to 2000 feet per minute without false alarming
- Temperature range: 0°C to 49°C, 32°F to120°F
- Humidity range: 10% to 93%
- UL Listed
- Factory Mutual Approved

Alarm Current:

24 VDC: 17 to 36mA

Diameter:

6.2"(157.5mm)

Weight:

120 VAC - 1.2 lbs (.5 kg)
24 VDC - .8 lbs (.4 kg)

9732

Identical to Model 9734 except:
- 24 VDC, 4-wire

Replacement Parts	
Model No.	Description
9720 H	Ionization Detector Head Only
813 x 135H	Photo-electronic Detector Head Only
9724B	Base only - 120 VAC/4-Wire - can be used with either detector head
9722B	Base only - 24 VDC/4-Wire - can be used with either detector head

Used With Model 980/981

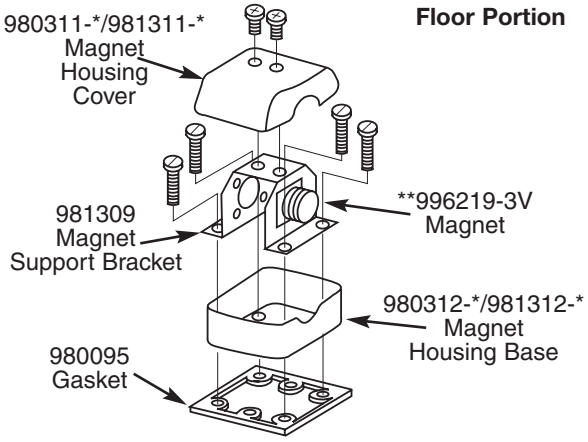

***For voltages other than 12 VDC, 24 VAC, 24 VDC, and 120 VAC, contact factory for electromagnet assembly part number.*

*Screw Kit for 980: 980328-**
*Screw Kit for 981: 981328-**

*specify finish

Used With Model 980/981, 990, 991, 996, 997

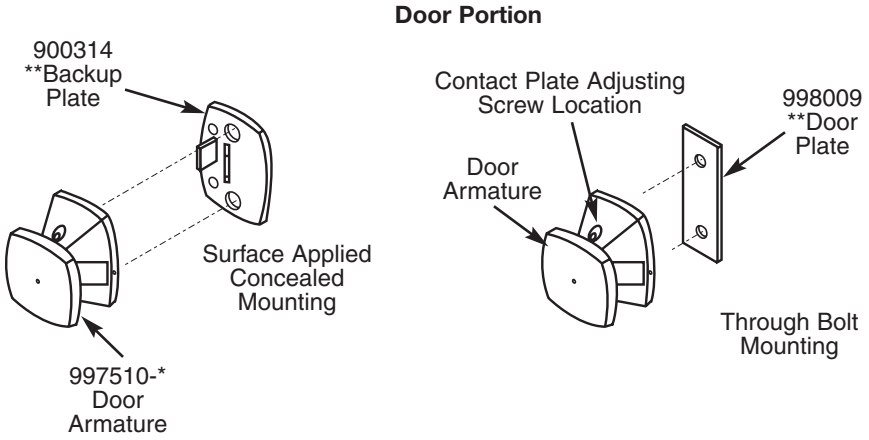

***Not Sold Separately – See Screw Kit*

Door portion screws included with Wall/Floor parts.

*specify finish

Used With Model 990, 989

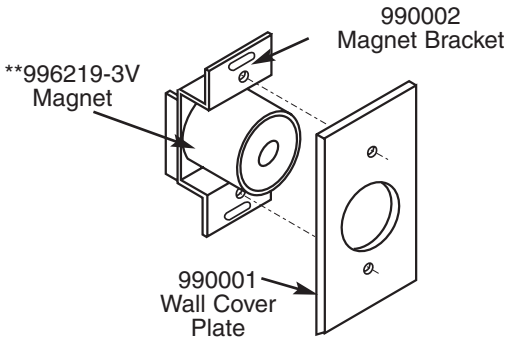

***For voltages other than 12 VDC, 24 VAC, 24 VDC, and 120 VAC, contact factory for magnet mounting bracket assembly part number.*

*Screw Kit for 990: 990300-**

*specify finish

USED WITH MODEL 997, 998

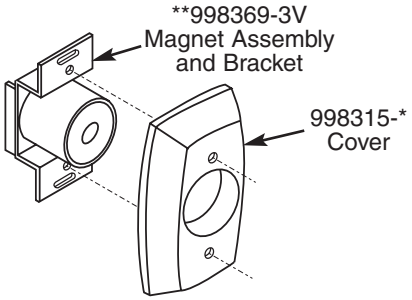

***For voltages other than 12 VDC, 24 VAC, 24 VDC, and 120 VAC, contact factory for magnet mounting bracket assembly part number.*

*Screw Kit for 997/998: 998300-**

*specify finish

USED WITH MODEL 998, 999

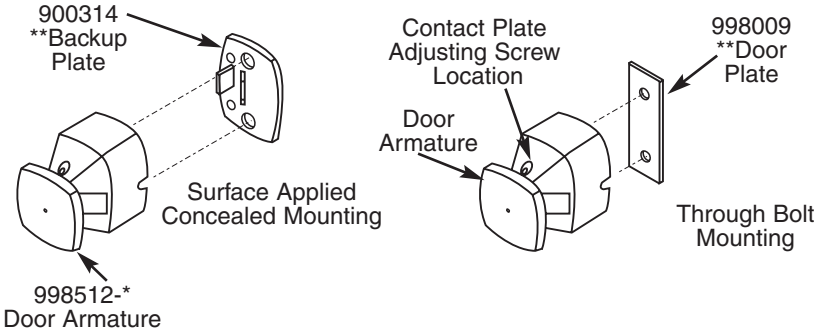

***Not Sold Separately – See Screw Kit*

Door portion screws included with Wall/Floor parts.

*specify finish

USED WITH MODEL 996

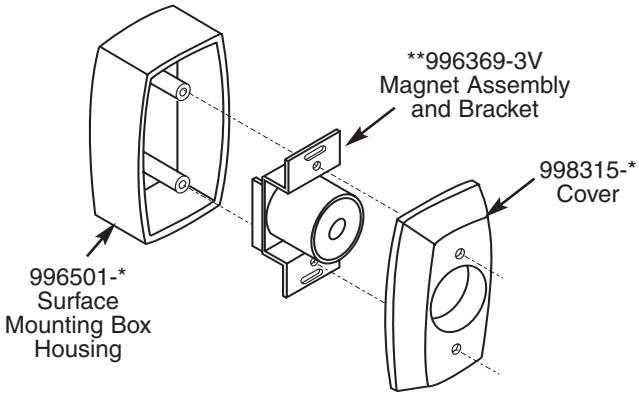

***For voltages other than 12 VDC, 24 VAC, 24 VDC, and 120 VAC, contact factory for magnet mounting bracket assembly part number.*

*Screw Kit for 996: 996325-**

*specify finish

USED WITH MODEL 989

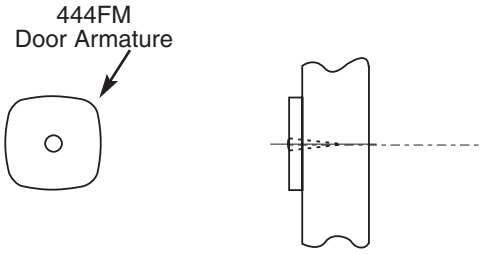

Attachment screw included in Kit.

Used With Model 999

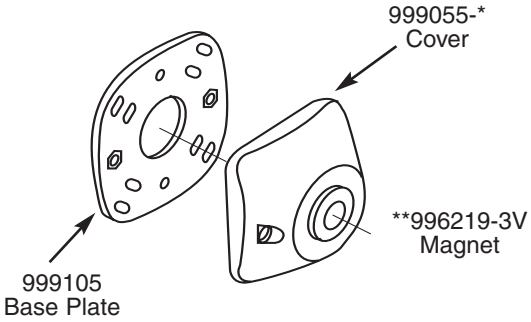

***For voltages other than 12 VDC, 24 VAC, 24 VDC, and 120 VAC, contact factory for magnet mounting bracket assembly part number.*

*Screw Kit for 999: 999318-**

*specify finish

Used With Model 991

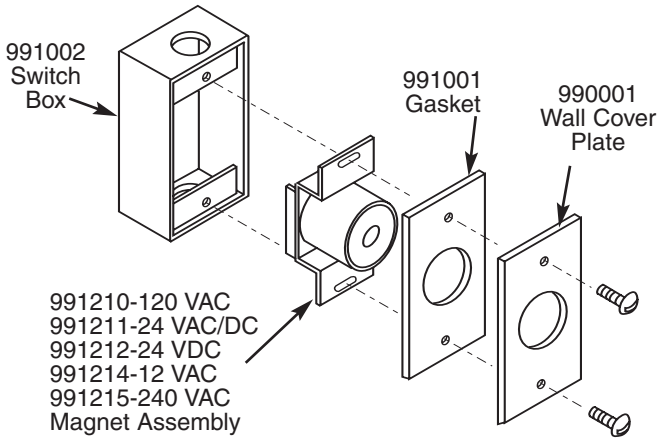

*Screw Kit for 991: 990300-**

*specify finish

Used With Model 993

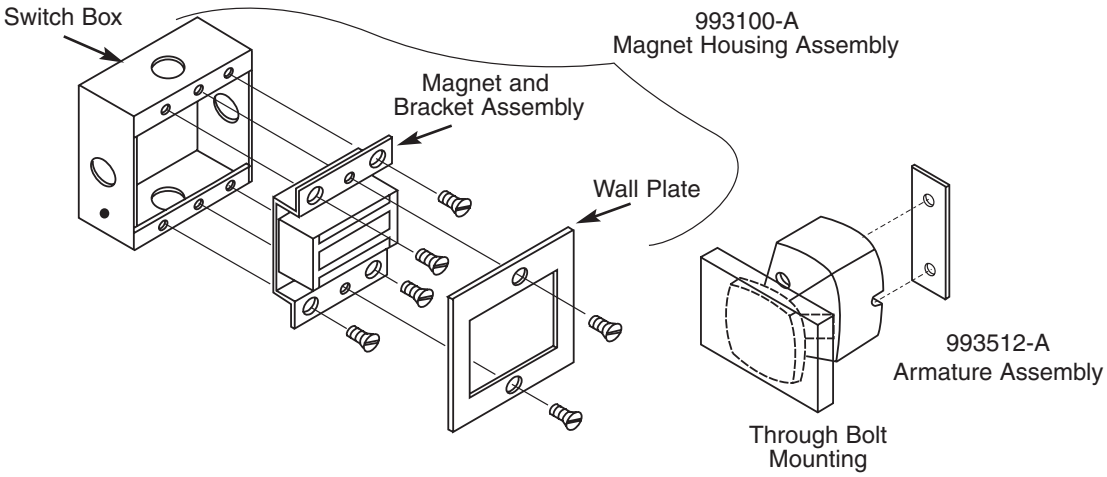

Screw Kit for 993: 993300-A

Used With Model 972H/973H

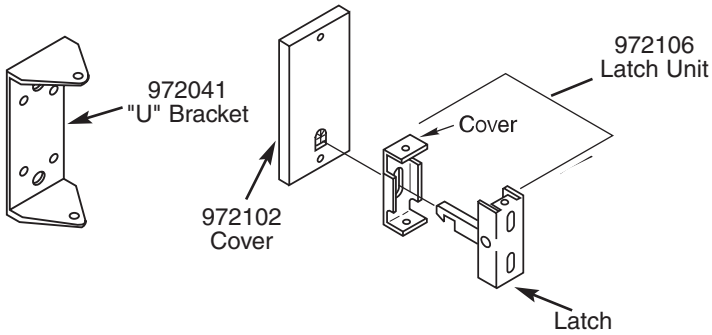

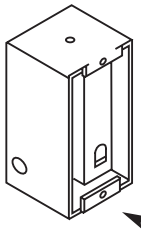

Screw Kit for 972/973H: 972190

Box
972100/973100–12 VDC
972112/973112–24 VAC
972118/973118–120 AC
972120/973120–24 VDC

Used With Model 972S/973S

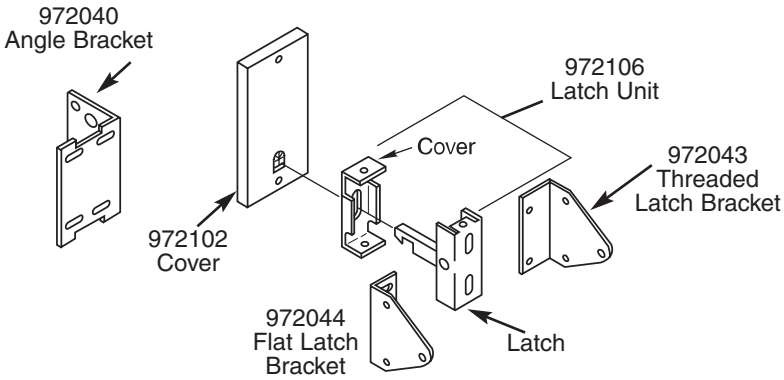

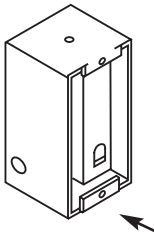

Screw Kit for 972/973S: 972290

Box
972100/973100–12 VDC
972112/973112–24 VAC
972118/973118–120 AC
972120/973120–24 VDC

Used With Model 972U/973U

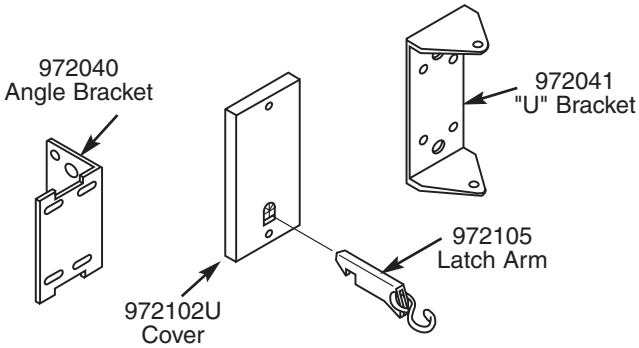

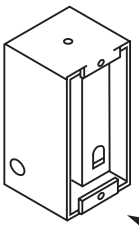

Screw Kit for 972/973U: 972390

Box
972100/973100–12 VDC
972112/973112–24 VAC
972118/973118–120 AC
972120/973120–24 VDC

SELECTOR CHART FOR STANDARD ARCHITECTURAL MAGNETS

If the distance from wall to door is:	Use
7/16 (11)	989
1-13/16 (46)	990
2-5/8 (67)	997
3-5/8 (92)	998
4-1/8 (105)	996
4-3/8 (111)	999
5-1/8 (130)	998 x 996XK
6-5/8 (168) min.	980

900 – Minimum: 1-1/2"(38mm) extension.
Maximum: unlimited using combination of extensions [1/2"(13mm), 3/4"(19mm), etc.]

HOW TO ORDER

A. Where trivoltage symbol is shown, use model number and finish, i.e.; 998 689.

B. For voltages other than trivoltage, put model number, voltage and finish, i.e.; 998 12 VAC 689.

C. For models not furnished in trivoltage, put model number, voltage and finish, i.e.; 972U 120 VAC 689.

D. To order parts:
Put part number and finish (if applicable), i.e.; Wall Covers 998315 689.

	Model/Part Number	Voltage	Finish
Example A	998	--	689
Example B	998	12VAC	689
Example C	972U	120VAC	689
Example D	998315	--	689