RIXSON®

Overhead Concealed Closers

Designed for

Aluminum, Hollow Metal,

Wood Doors

and Frames

Introduction

Overhead concealed closers are an aesthetically appealing way to close medium-traffic doors. Center-hung Rixson® overhead concealed closers use the spindle as the pivot point, giving the most efficient way to control doors. Offset models allow the use of continuous, standard butts or intermediate and bottom pivots to hang doors.

Heavy and high-traffic doors should always use floor closers, but when doors are of average size and usage, the following closers are viable options to surface closers.

Contents

Page

Overhead Concealed Closers: General Information **98**
Model 608 Center Hung Closers 99
Model 0608 Offset Hung Closers 100
Model 700 Center Hung Closers 101
Model 800 Center Hung Closers 102
Model 0700 Offset Hung Closers 103
Parts Drawings **104-114**
Quick Reference of Options **115**

Model 608
Overhead Concealed Closer

Model 608 Center Hung

Application
Single or Double Acting, Non-handed
Exterior or Interior Doors
Low to Medium Usage
Weight to 200 lbs.
Exterior Door Size 3'6" x 8'0"(1067 x 2438mm)
Interior Door Size 3'8" x 8'0"(1118 x 2438mm)

End load arm shown

Product Description & Features
- 608EL - Aluminum door/frame, end load arm (Standard)
  608SL - Aluminum door/frame, side load arm (Option)
  (Mounting screw should be on inside of door)
  M608 - Metal door/frame
  W608 - Wood door/frame
  MW608 - Wood door/metal frame
- Available non hold-open (N) or hold open (A). Specify degree (90° or 105°, A or N)
- Closer package includes bottom pivot. 608011 for aluminum doors. 217 for wood or metal doors
- 1-3/4" doors
- Always use auxiliary stop
- 1/2" extended spindle available – specify when ordering
- Cover plate standard with metal or wood jambs. Available in plated finishes
- Adjustable closing speed and mechanical backcheck
- Cast iron body and steel spindle/pistons ensure life cycle economy and trouble-free operation
- Concealed mounting helps reduce vandalism and maintains architectural aesthetics
- Aluminum frame – compact design fits 1-3/4" x 4" head
- Not available PH, CWF or DA
- Applied stop required (see part number 60131 page 34)
- Wood and metal frames require mounting box 608049PKG (order separately)

Technical Information

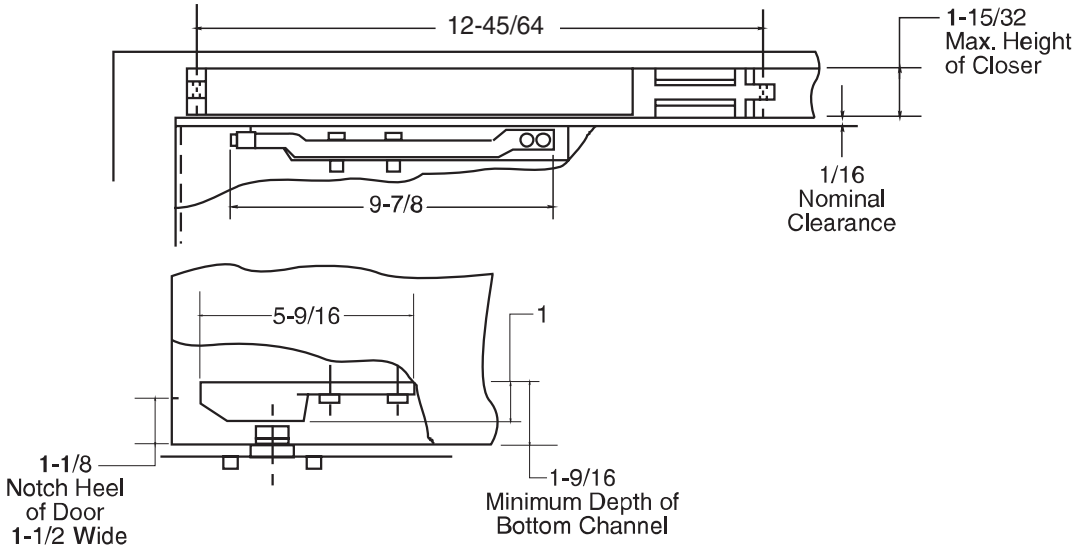

Model 0608
Overhead Concealed Closer

Model 0608 Offset Hung

Application
Single Acting, Non-handed
Exterior or Interior Doors
Low to Medium Usage
Weight to 200 lbs.
Door Size 3'8" x 8'0"(1118 x 2438mm)

Product Description & Features
- 0608 - Aluminum door/frame
  M0608 - Metal door/frame
  W0608 - Wood door/frame
  MW0608 - Wood door/metal frame
- Available non hold-open (N) or hold open (A). Specify degree (90° or 105°, A or N)
- Means of hanging: offset pivots, butts, etc., by others
- 1-3/4" doors
- Auxiliary stop required
- 1/2" extended spindle available – specify when ordering
- Cover plate standard with metal or wood jambs. Available in plated finishes
- Adjustable closing speed and mechanical backcheck
- Cast iron body and steel spindle/pistons ensure life cycle economy and trouble-free operation
- Not available PH, CWF or DA
- Wood and metal frames require mounting box 608049PKG (order separately)

Technical Information

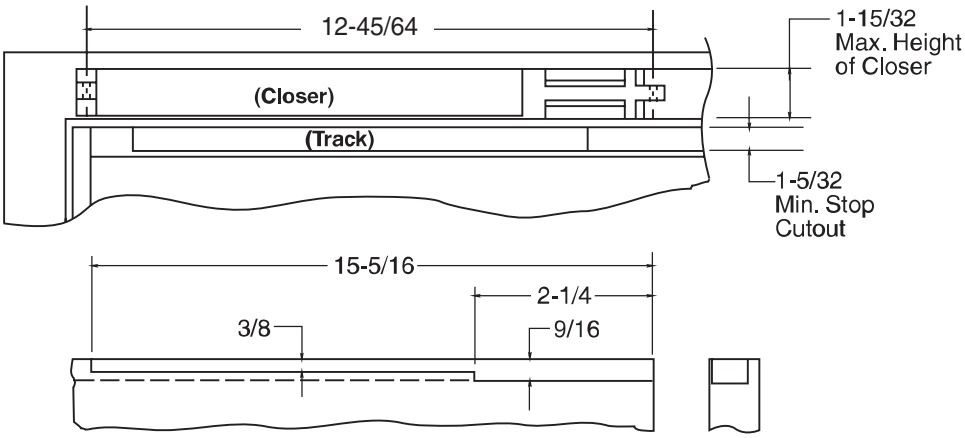

Model 700
Overhead Concealed Closer

Model 700 Center Hung

Application
Single Acting, Handed
Exterior or Interior Doors
Low to Medium Usage
Weight to 200 lbs.

ANSI C05052

Closer shown with cover, furnished with W, M, MW models

Product Description & Features
- 700 - Aluminum door/frame
  M700 - Metal door/frame
  W700 - Wood door/frame
  MW700 - Wood door/metal frame
- Available non hold-open (N) or hold open (A). Specify degree (90° or 105°, A or N)
- Closer package includes bottom pivot
- 1-3/4" doors
- Always use auxiliary stop
- 1/2" extended spindle available – specify when ordering
- Adjustable closing speed
- Adjustable hydraulic backcheck
- Not available CWF or DA
- For ADA compliance use Model 706 for interior 36" doors
- Applied stop required (see part number 60131 page 34)
- Wood and metal frames require 198 and 192 mounting kits (order separately)

Technical Information

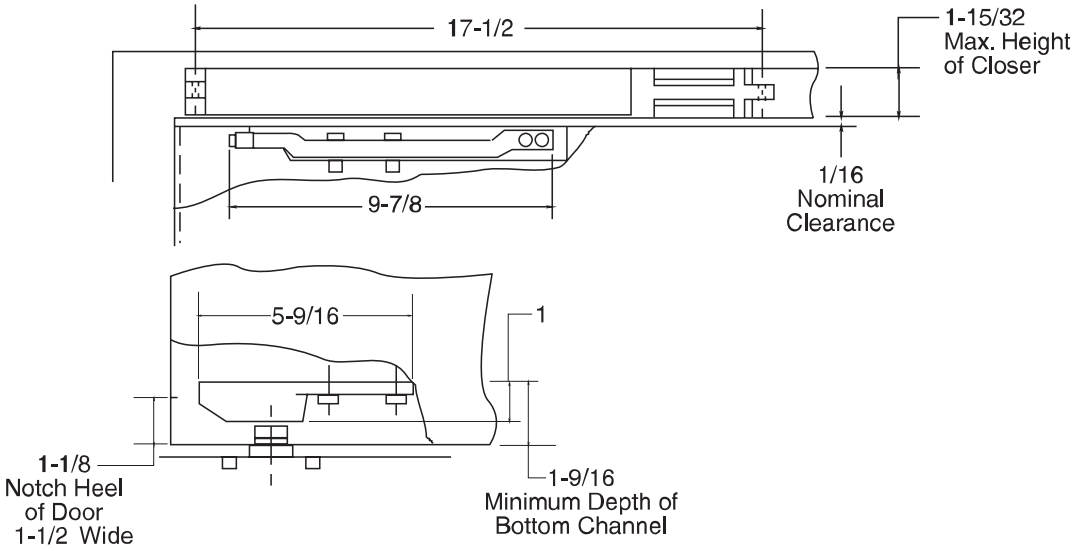

Spring Sizes Specify size when ordering		
706 -	Exterior	2'6" x 8'0"(762 x 2438mm)
	Interior	3'0" x 8'0"(914 x 2438mm)
707 -	Exterior	3'0" x 8'0"(914 x 2438mm)
	Interior	3'3" x 8'0"(991 x 2438mm)
708 -	Exterior	3'6" x 8'0"(1067 x 2438mm)
	Interior	3'8" x 8'0"(1118 x 2438mm)

Model 800 Center Hung

Application
Double Acting, Non-handed
Exterior or Interior Doors
Low to Medium Usage
Weight to 200 lbs.

ANSI C05052, C05062

Closer shown with cover, furnished with W, M, MW models

Product Description & Features
- 800 - Aluminum door/frame
  M800 - Metal door/frame
  W800 - Wood door/frame
  MW800 - Wood door/metal frame
- Available non hold-open (N) or hold open (A). Specify degree (90° or 105°, A or N)
- Closer package includes bottom pivot
- 1-3/4" doors
- Always use auxiliary stop
- 1/2" extended spindle available – specify when ordering
- Not available CWF or DA
- For ADA compliance use Model 806 for interior 36" doors
- Wood and metal frames require 198 and 192 mounting kits (order separately)

Technical Information

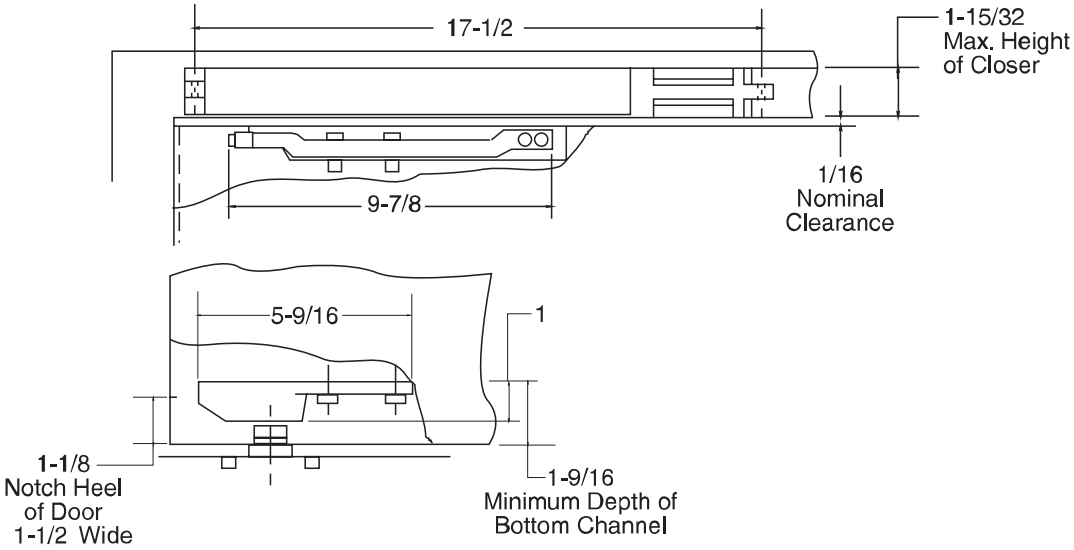

Spring Sizes Specify size when ordering		
806 -	Exterior	2'6" x 8'0"(762 x 2438mm)
	Interior	3'0" x 8'0"(914 x 2438mm)
807 -	Exterior	3'0" x 8'0"(914 x 2438mm)
	Interior	3'3" x 8'0"(991 x 2438mm)
808 -	Exterior	3'6" x 8'0"(1067 x 2438mm)
	Interior	3'8" x 8'0"(1118 x 2438mm)

Model 0700
Overhead Concealed Closer

Model 0700 Offset Hung

Application
Single Acting, Handed
Exterior or Interior Doors
Low to Medium Usage
Weight to 200 lbs.

ANSI C05032, C05042

Closer shown with cover, furnished with W, M, MW models

Product Description & Features
- 0700 - Aluminum door/frame
  M0700 - Metal door/frame
  W0700 - Wood door/frame
  MW0700 - Wood door/metal frame
- Available non hold-open (N) or hold open (A). Specify degree (90° or 105°, A or N)
- Means of hanging: offset pivots, butts, etc., by others
- Auxiliary stop required
- Adjustable closing speed and backcheck
- UL listed for fire-rated openings
- Not available CWF and DA
- For ADA compliance use Model 0706 for interior 36" doors
- Wood and metal frames require 0198 and 0192 mounting kits (order separately)

Technical Information

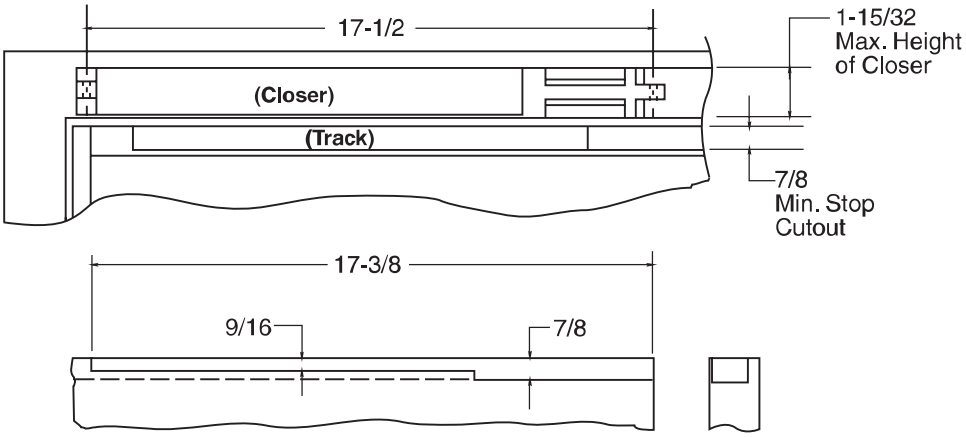

Spring Sizes Specify size when ordering		
0706-	Exterior	2'6" x 8'0"(762 x 2438mm)
	Interior	3'0" x 8'0"(914 x 2438mm)
0707-	Exterior	3'0" x 8'0"(914 x 2438mm)
	Interior	3'3" x 8'0"(991 x 2438mm)
0708-	Exterior	3'6" x 8'0"(1067 x 2438mm)
	Interior	3'8" x 8'0"(1118 x 2438mm)

EL608/SL608

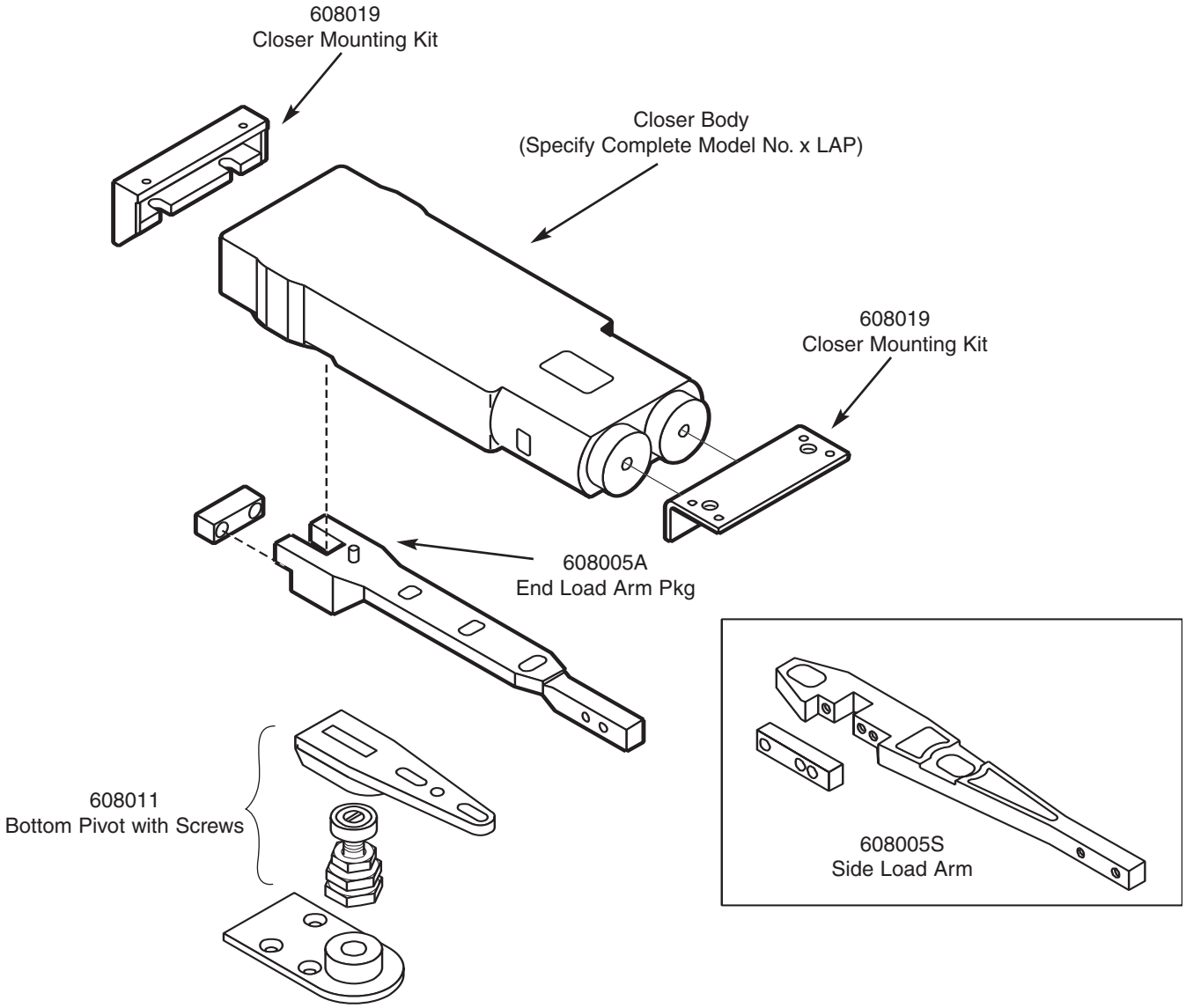
608019
Closer Mounting Kit
Closer Body
(Specify Complete Model No. x LAP)
608019
Closer Mounting Kit
608005A
End Load Arm Pkg
608011
Bottom Pivot with Screws
608005S
Side Load Arm

M608

** specify finish*

*Cover Plate Screw Kit 107022-**

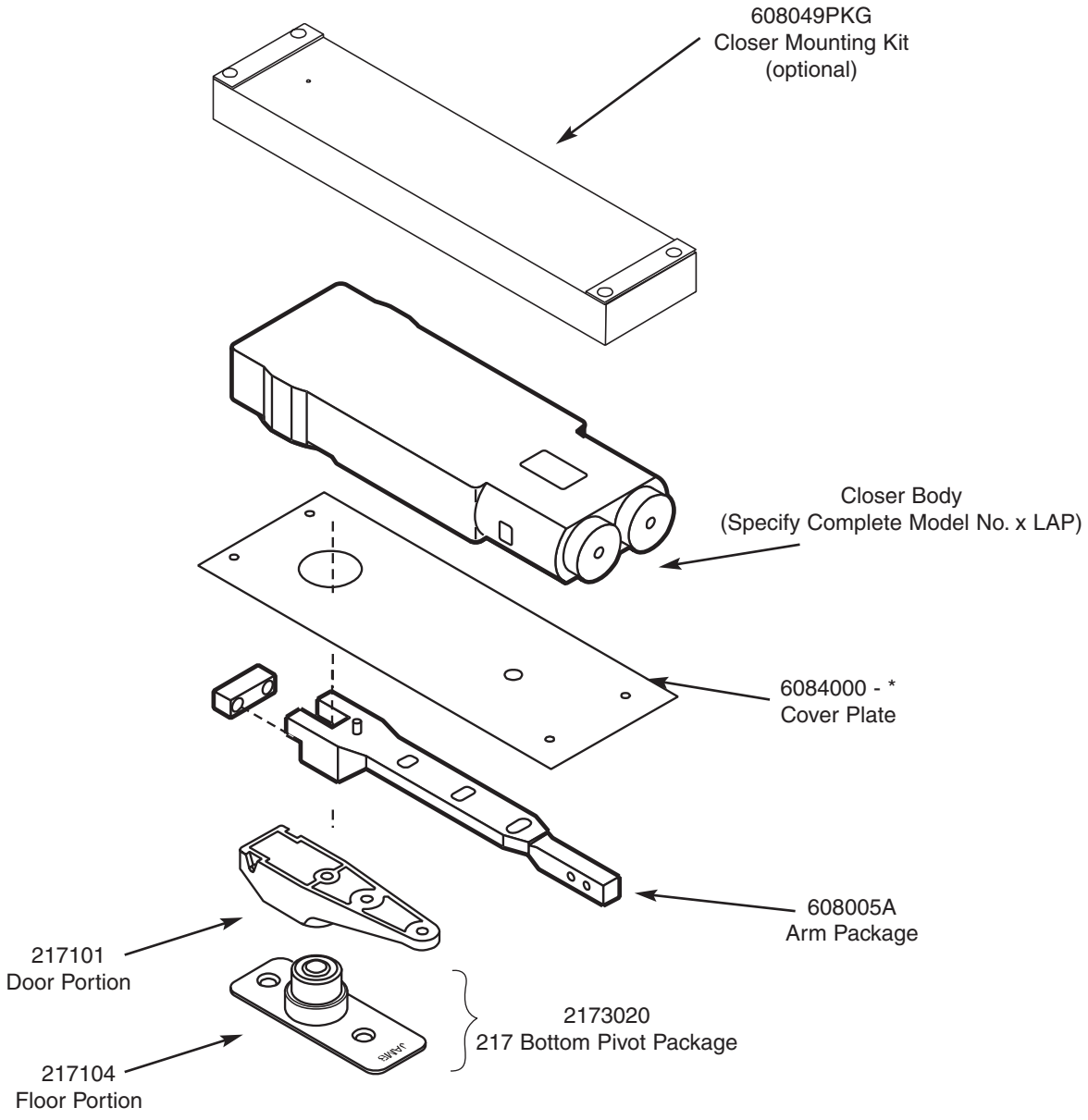

W608

** specify finish*

Bottom Pivot Screw Kit	*107056*
Arm Screw Kits	*107055*
	107143
Cover Plate Screw Kit	*107022-**

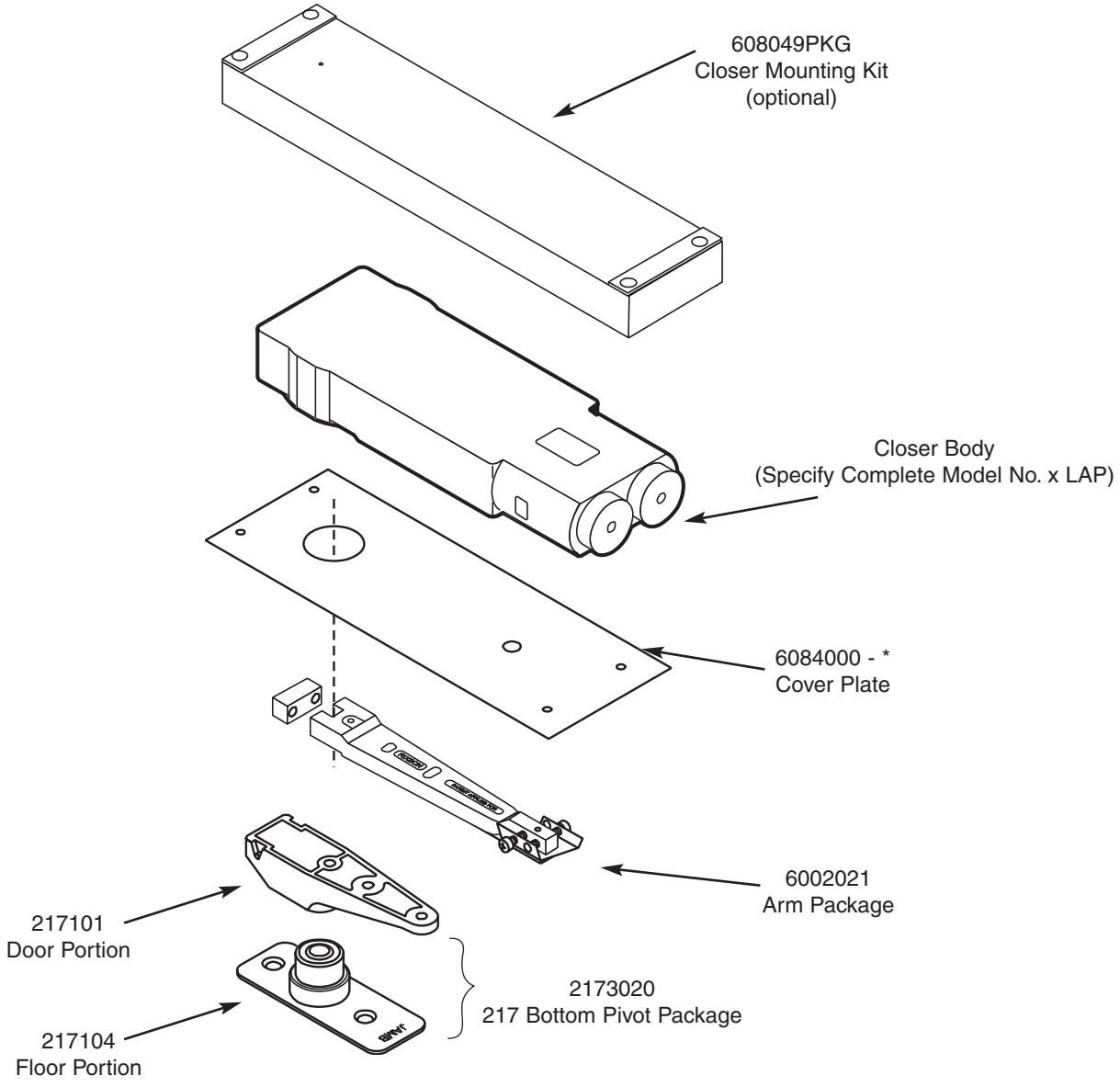

0608

** specify finish*

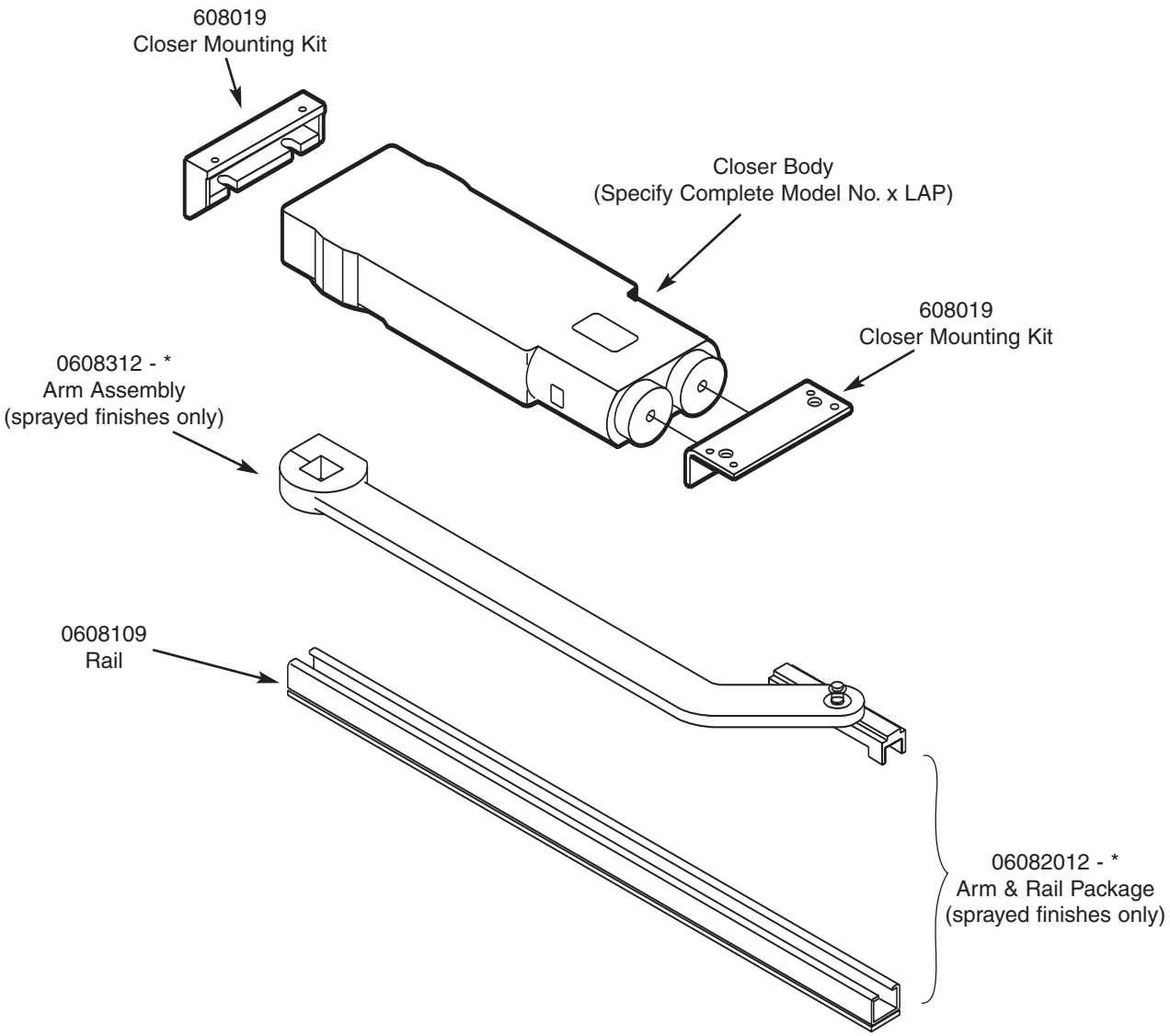

W0608/MW0608

** specify finish*

*Cover Plate Screw Kit 107022-**

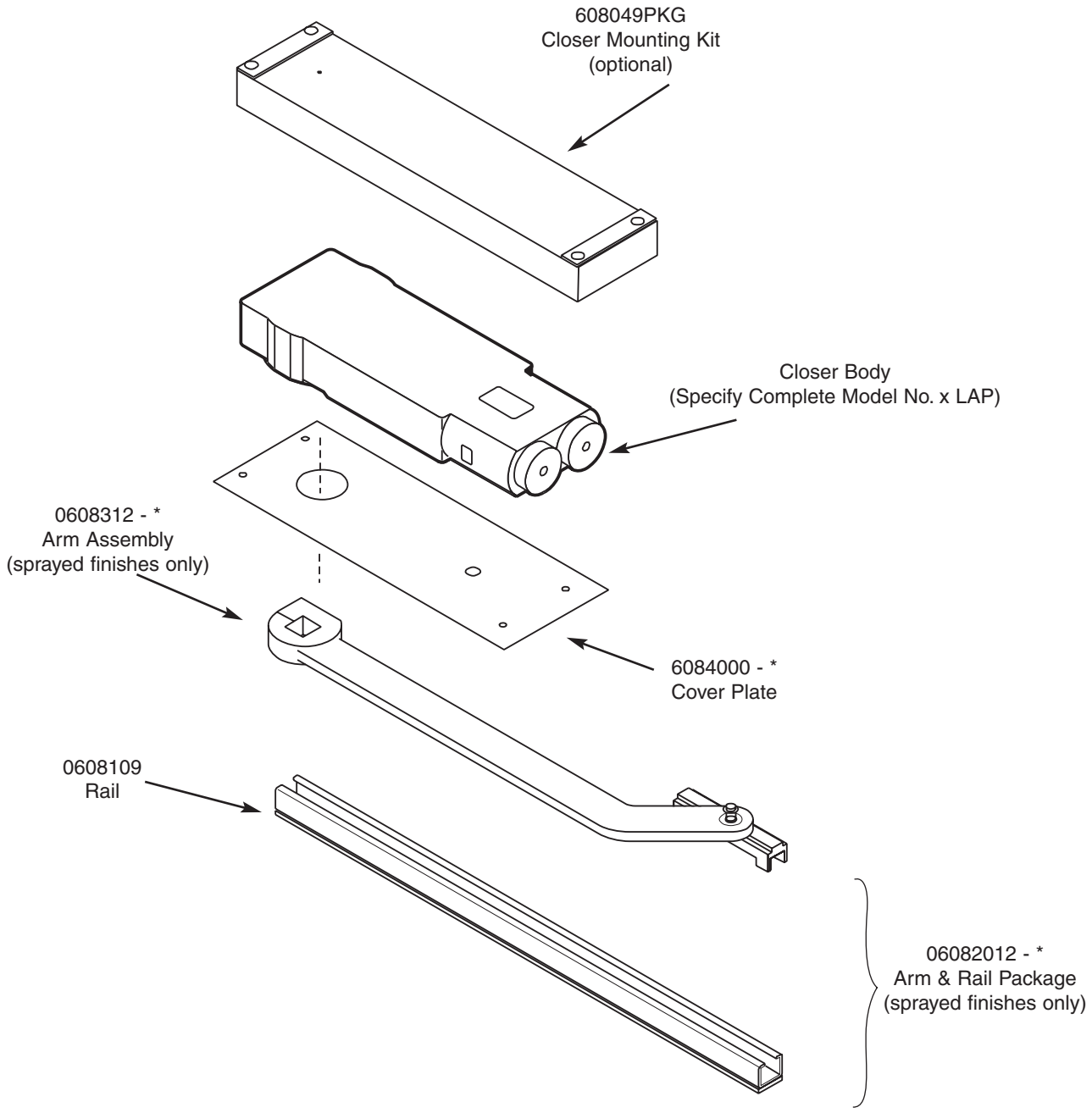

700/800

** specify finish*

Bottom Pivot Screw Kit	*107056*
Arm Screw Kits	*107055*
Arm Block Screw	*806018-PKG*
Cover Plate Screw Kit	*107006 -**

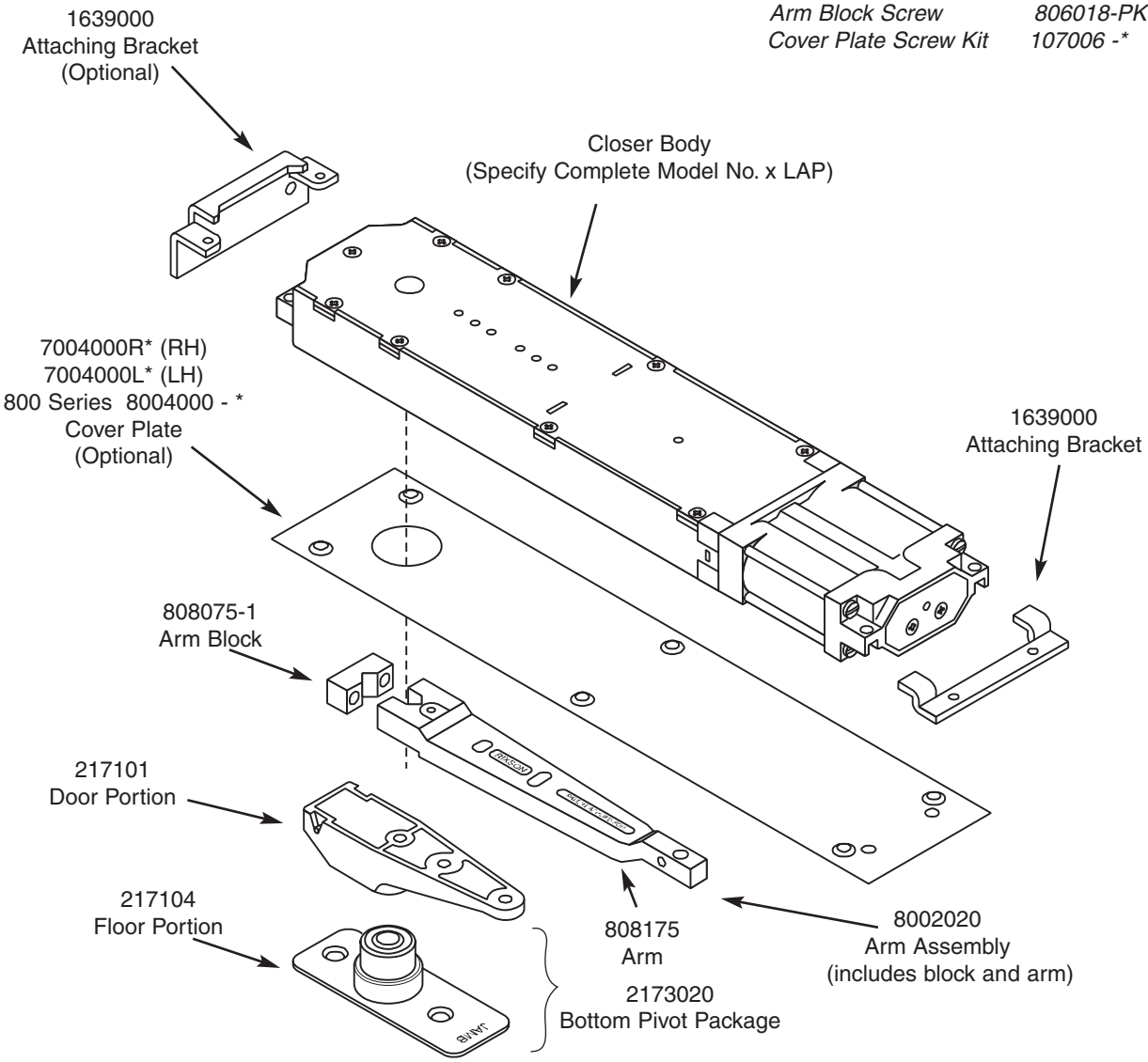

M700/M800

** specify finish*

Bottom Pivot Screw Kit	*107056*
Arm Screw Kits	*107055*
Arm Block Screw	*806018-PKG*
Cover Plate Screw Kit	*107006 -**

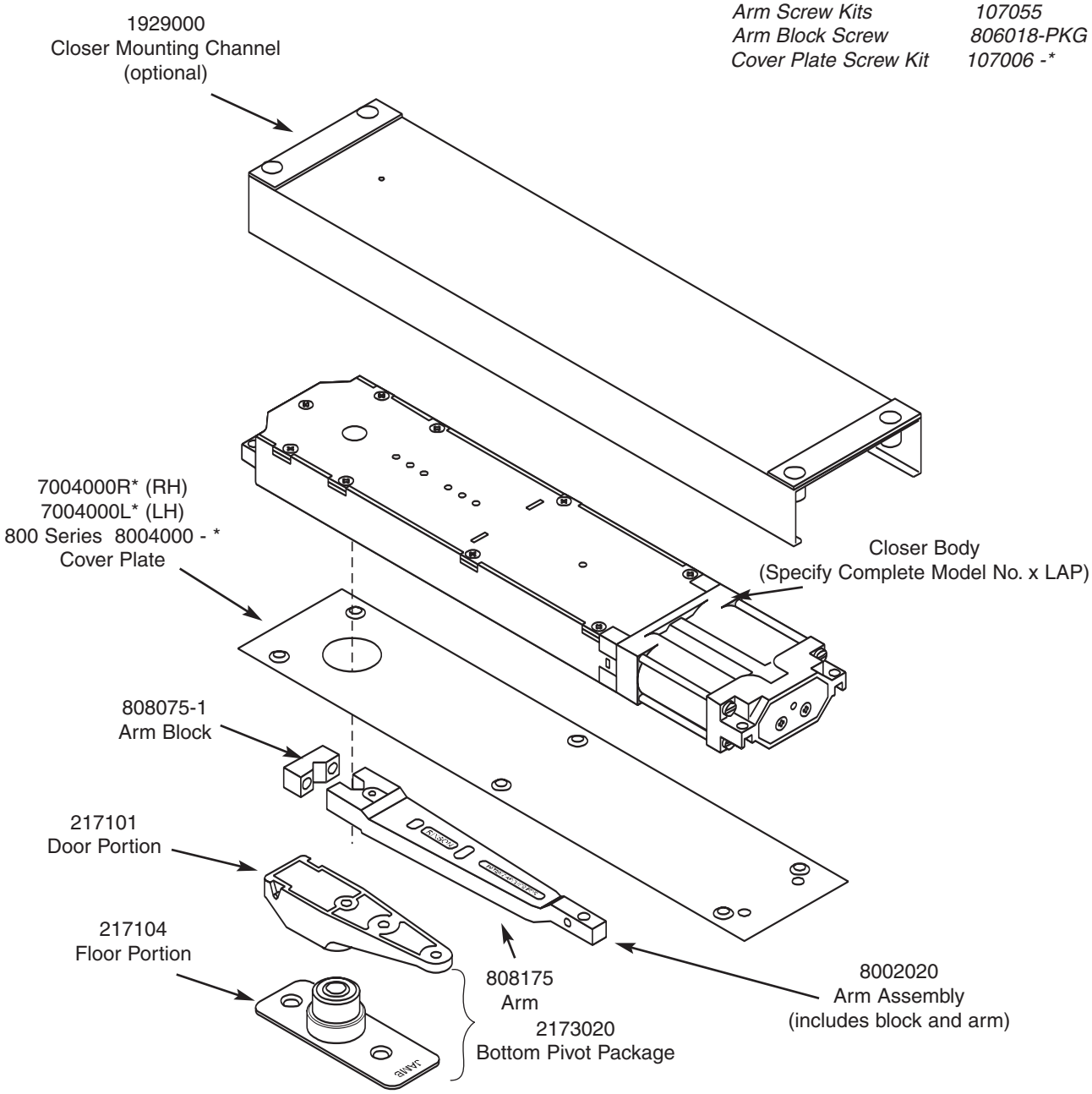

W700/W800

** specify finish*

Bottom Pivot Screw Kit	*107056*
Arm Screw Kits	*107055*
Arm Block Screw	*806018-PKG*
Cover Plate Screw Kit	*107006 -**

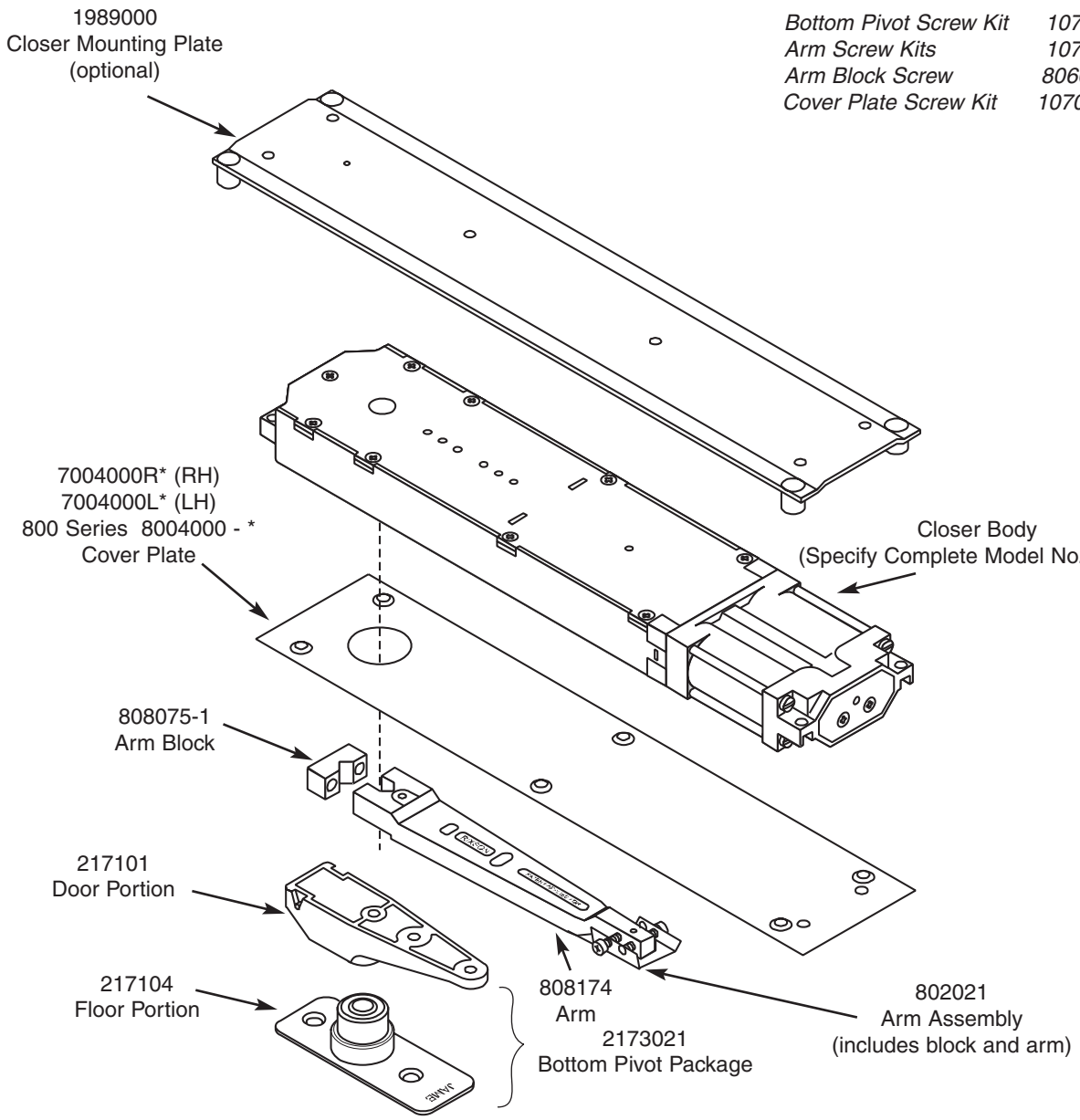

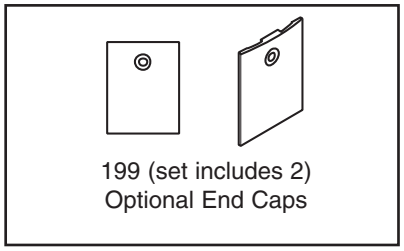

0700

** specify finish*

*Cover Plate Screw Kit 107006 -**

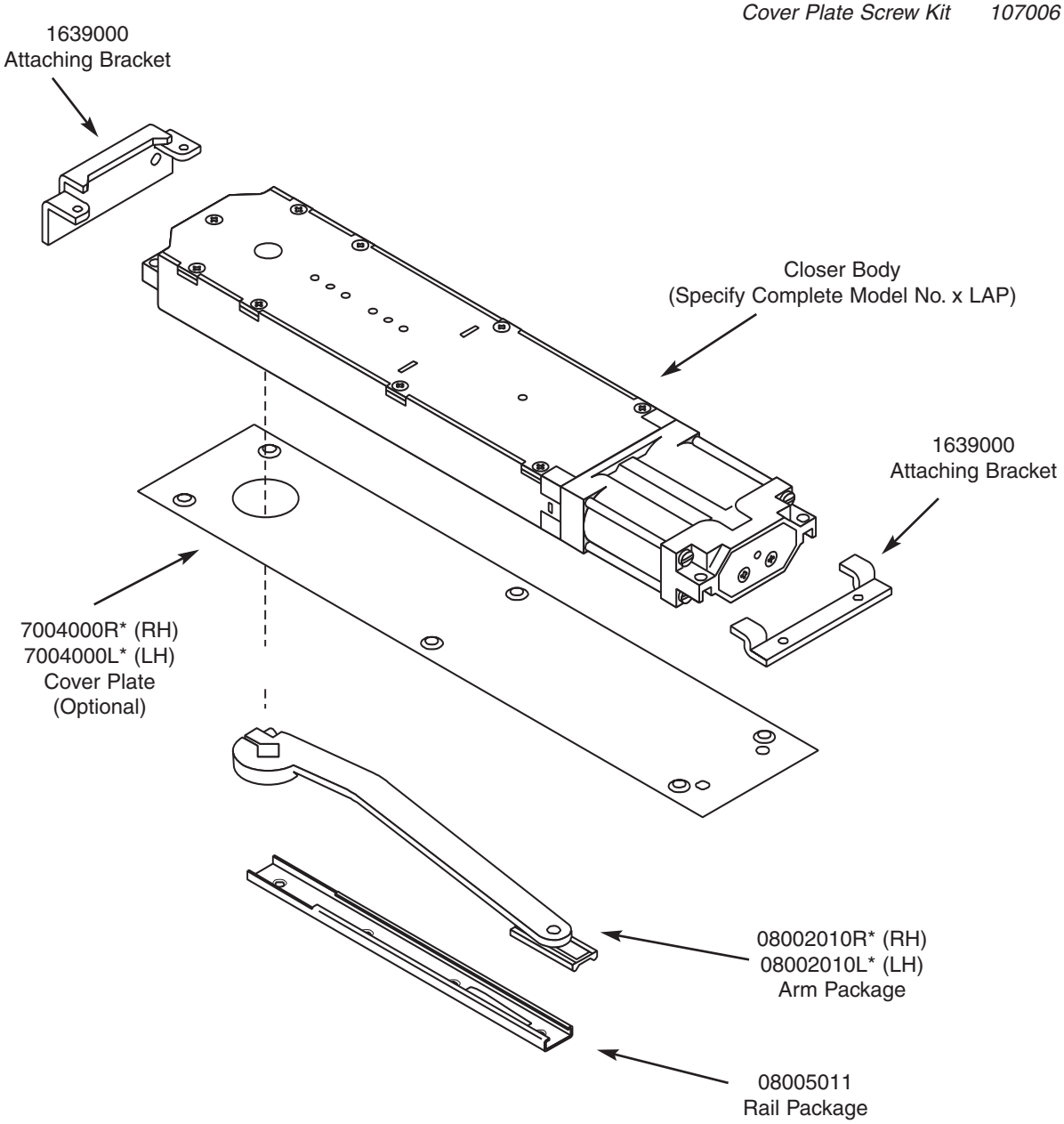

M0700

** specify finish*

*Cover Plate Screw Kit 107006 -**

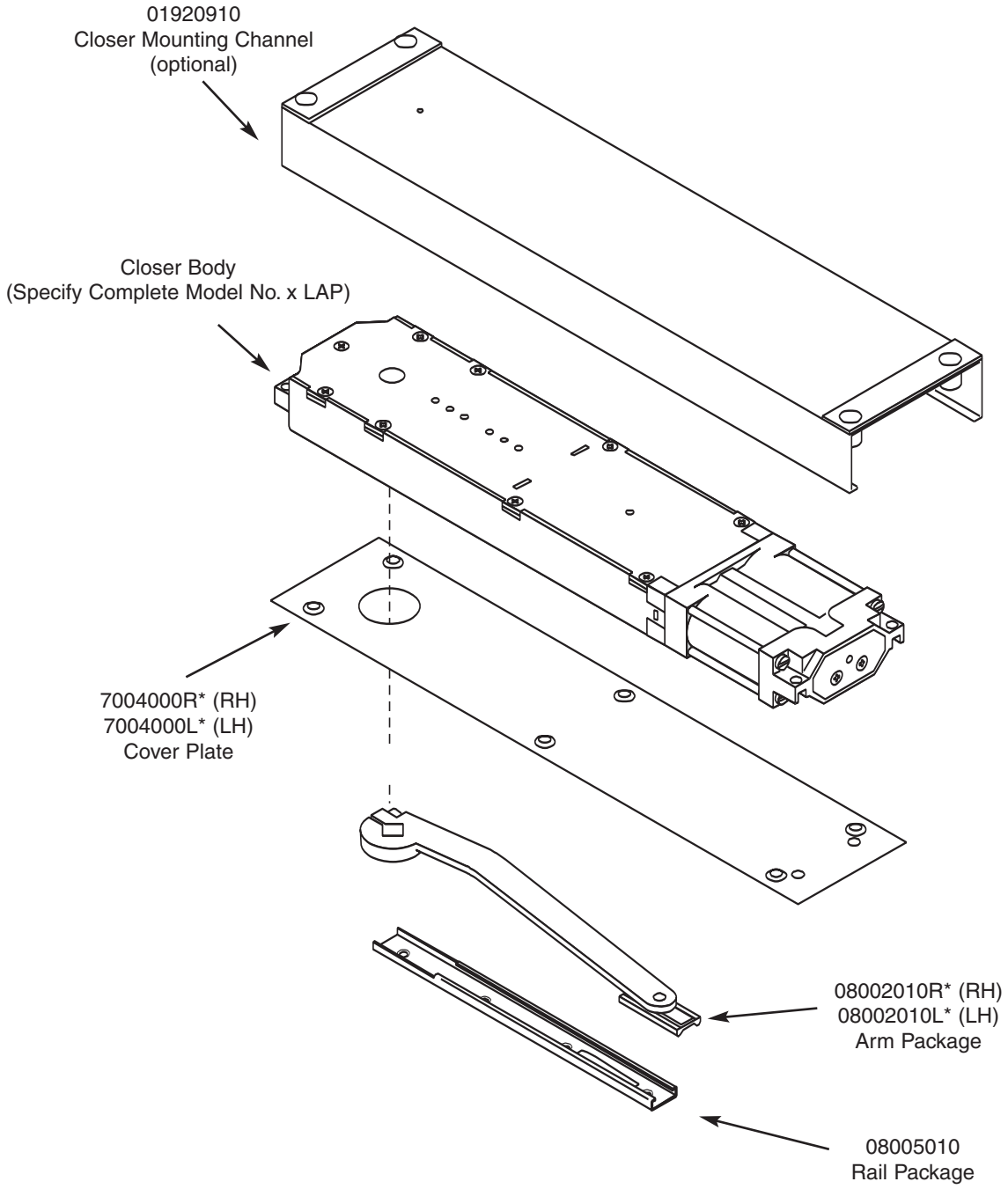

W0700

** specify finish*

*Cover Plate Screw Kit 107006 -**

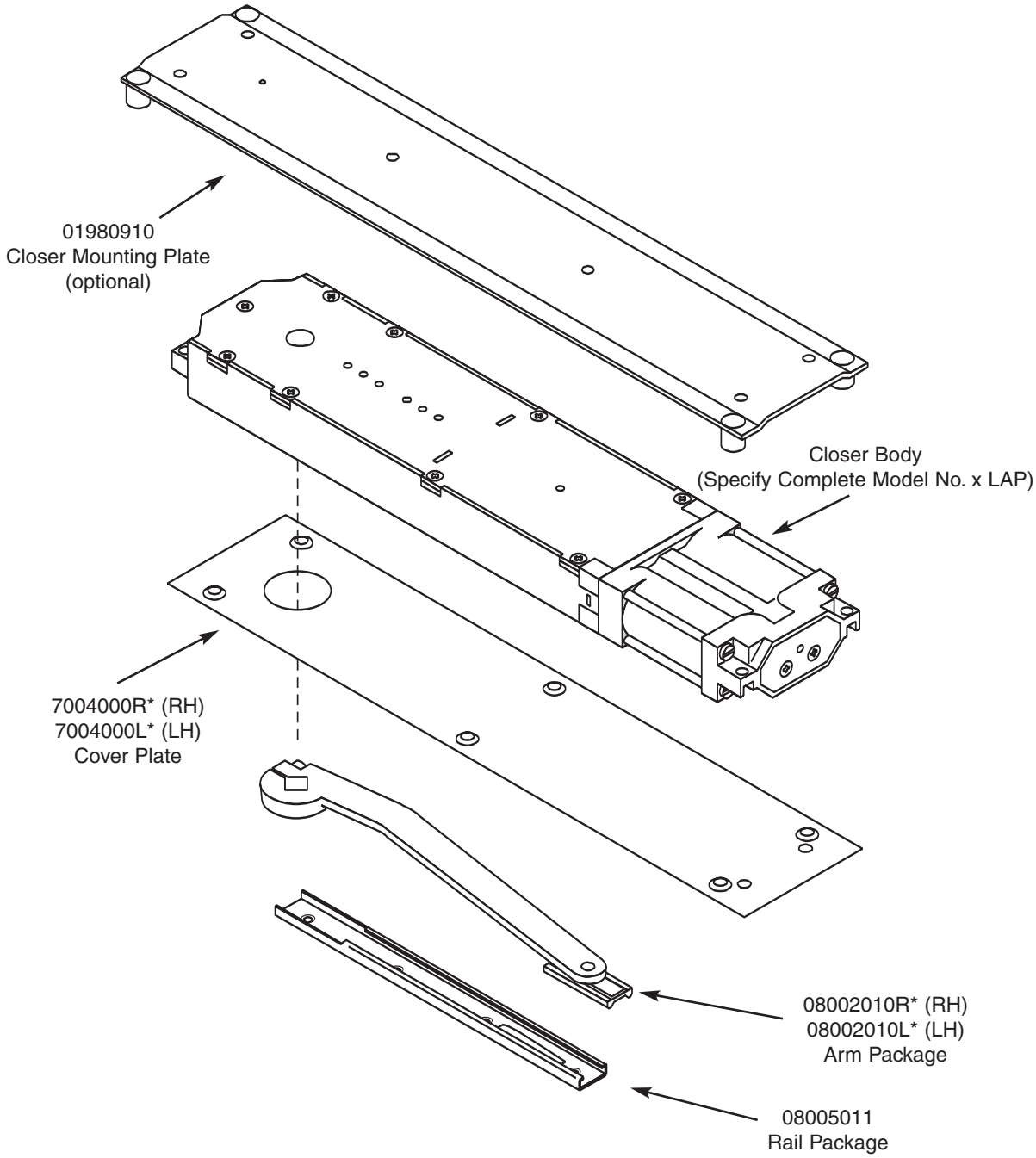

REFERENCE

SAMPLE

W	0707	90	A	LH	626
Prefix	Model	Degree	Hold Open or non hold-open	Hand	Finish

PREFIX

Prefix	Description
None	Aluminum Door/Frame
M	Metal Door/Frame
W	Wood Door/Frame
MW	Wood Door/ Metal Frame

MODELS

Model	Single Acting	Double Acting
Center Hung	608	608
	706	806
	707	807
	708	808
Offset Hung	0608	
	0706	
	0707	
	0708	

FINISHES

U.S. Standard	Description	BHMA Code
US3	Bright brass, clear coated	605
US4	Satin brass, clear coated	606
US9	Bright bronze, clear coated	611
US10	Satin bronze, clear coated	612
US10B	Satin oxidized bronze, oil rubbed	613
US26	Bright chrome plated	625
US26D	Satin chrome plated	626
SA	Sprayed aluminum	689
SB	Sprayed bronze	690
SLB	Sprayed light bronze	691

Cover plates are available in plated finishes
Offset arms are available sprayed finishes only