RIXSON®

Thresholds

Finishing Touch

for Floor Closer

Installations

Introduction

Rixson® thresholds add the finishing touch to the concealment of floor closers and pivot sets.

Unlike standard thresholds supplied as part of a weatherstripping package, *Rixson* thresholds have preparations for spindles, adjusting values and separate floor plate sections to allow maintenance to the floor closer without disturbing the entire opening.

ANSI 117.1 and A.D.A. requirements are met with 1/4" high thresholds. Prefix “PH” to 400, 500, 600, 700, and 800 in aluminum and PH 700 and 800 in bronze. The PH designation must be put in threshold description.

When ordering with PH floor closers it is not assumed PH threshold is necessary.

ANSI 117.1 and A.D.A. will not allow over 1/2" total threshold height.

Abrasive coating may be added to increase sure footing for handicap situations.

Contents

Page

Thresholds: General Information **168**
Applications 169-170
Sizes 171
Types 172-173
How to Order 174

Center Hung

When ordering section B, advise hand, type (only used on 1 and 4), width (400, 500, 600, 700, 800), height 1/2" or PH 1/4", if dimensions other than standard (see chart on page 172), material (aluminum, bronze, or stainless steel).

Section D specify type of closer, closer features that affect valving (SHO, AHO, NHO, DA) type (1, 3, 4, 5) width (700, 800) if stop strip, height 1/2" or PH 1/4", if dimensions other than standard (see chart on page 173). Offset (3/4 or 1-1/2)

Section A advise opening size, single or pair of doors, type (1, 3, 4, 5) width (400, 500, 600, 700, 800), if stop strip, height (1/2" or PH 1/4"), type of closer, type of material (aluminum, bronze, or stainless steel). If single door opening, if miter is required.

Technical Information

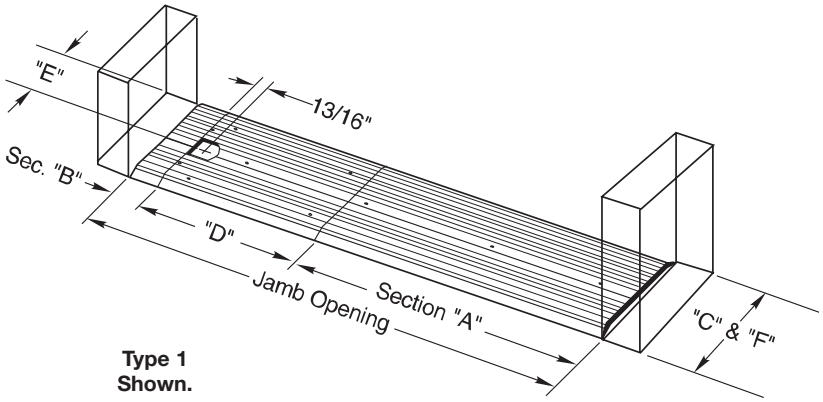

Type 1 Shown.

Offset Hung

See previous notes for section A and D.

When miters are ordered for replacement, specify section material (aluminum, bronze, or stainless steel) and hand. Standard miters are 1-1/8" – advise if different width is required. Lengths other than those on page 173 must be noted.

Technical Information

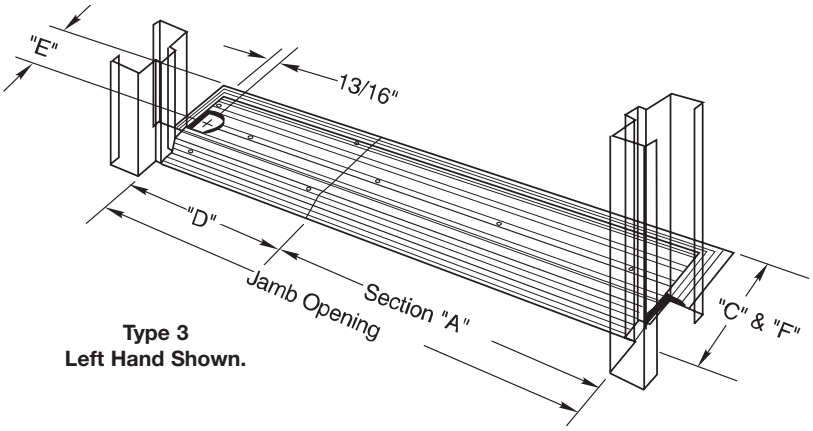

Type 3 Left Hand Shown.

Thresholds

Return Miters

Furnished on the pull side of the door. The return miter at the spindle side of the doorway is detachable for easy removal of closer plate section. Four corner miters, to enhance finished appearance, are available upon request.

Technical Information

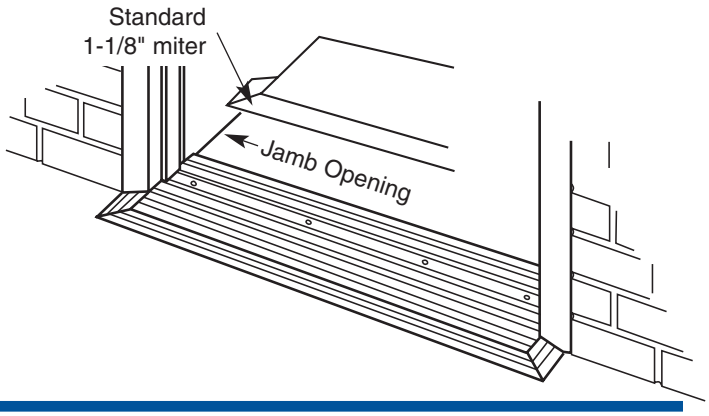

MITERED DESIGN
1-1/8" mitered end standard.
Extended mitered ends available–specify length.

Straight Ends

When the threshold abuts a wall at the ends, straight ends up to 2" can be substituted for mitered returns at no additional cost. Provides a continuous, finished appearance.

Technical Information

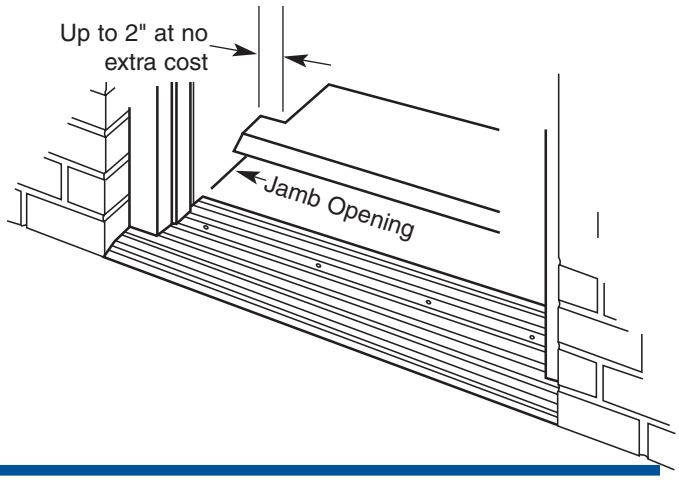

STRAIGHT END DESIGN
Extended straight ends available–specify length.

Bevel Cut Thresholds

Standard width thresholds can be straight rip cut to achieve a flush floor condition. The threshold bevel on the interior side of the door is removed; permits threshold and carpet (or tile) to meet at the same height. A 5/16" bar support (provided) or built-up concrete sill is required. Dimensional details required.

Technical Information

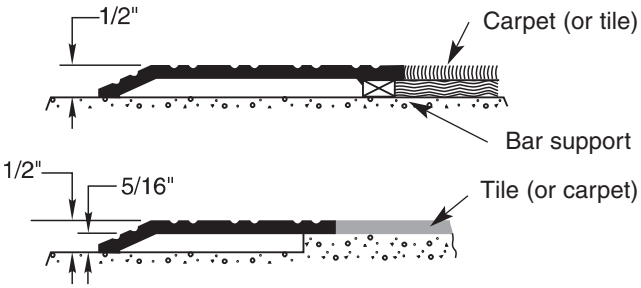

Scribing

Cutting the threshold to fit the door stop is done on the job. Rixson® will do scribing only if accurate dimensions are supplied. Cost is extra, depending upon details.

(Drawings at right indicate number of cuts required to complete various scribing operations.)

Technical Information

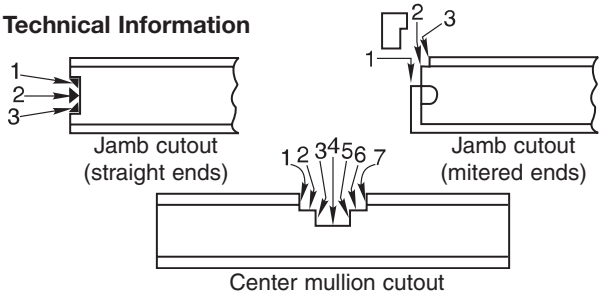

Stop Strip

Stop strips are furnished at extra cost, when specified. On single acting doors, a stop strip is recommended to serve as a weather seal on the push side at the bottom of the door.

No. 200 Stop Strip

For use on threshold cut for all floor and overhead concealed OFFSET TYPE closers and pivot sets. This adds 3/8" to width of threshold. Where 200 stop strip is used, it is always applied to the bevel on the push side of the threshold.

Technical Information

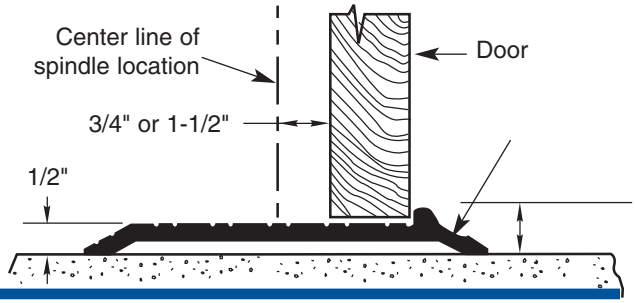

No. 200 Stop Strip (Offset Hung)

No. 201 Stop Strip

For use on thresholds cut for all floor and overhead concealed CENTER HUNG single acting closers, CENTER HUNG pivot sets and BUTT HUNG floor closers. Where 201 stop strip is used, stop strip is always applied on tread surface of threshold on push side, not on the bevel.

Technical Information

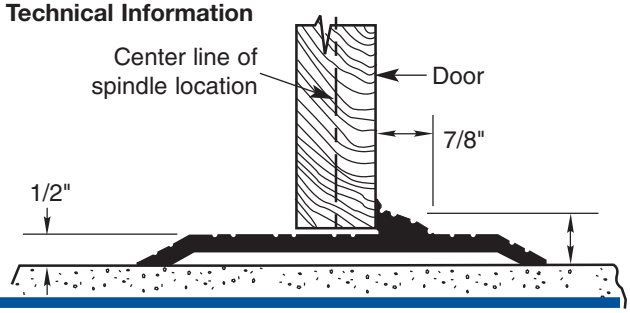

No. 201 Stop Strip (Center & Butt Hung)

No. 301 Step Down

Designed to accommodate sill conditions where the floor drops 1/2" below sill height. Add 1" to width of threshold. Step down strip may be applied to either push or pull side of thresholds. Not available on Type 5 thresholds.

Technical Information

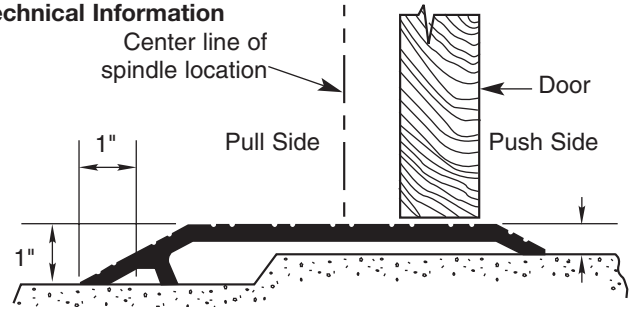

No. 301 Step Down Strip

Thresholds for Overhead and Surface Door Closers

Straight threshold lengths, with or without 1-1/8" mitered or straight ends, are available for Nos. 700, 800, and 0700 overhead concealed closers, or any manufacturer's surface and overhead concealed closer.

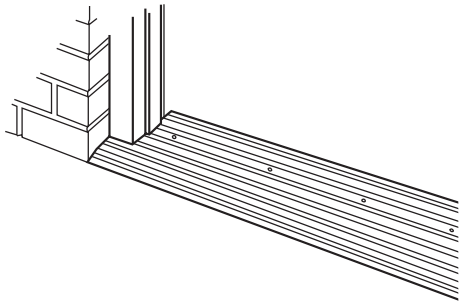

Anchoring

Thresholds are drilled for installation. They are furnished with concrete anchors as standard. If machine screws and expansion shields are required, specify **"MSES."**

SIZES

The width of the threshold must be sufficient to completely cover the closer. All cover plates (or "D" section) must be 6-3/4" or 7-3/4" wide. Narrower types may be used where overhead concealed or surface closers are being supplied.

On 500 series thresholds, the cover plate section is furnished with 6-3/4" or 7-3/4" cover plate (D Section) and 3-3/4" or 4-3/4" center (A Section).

Aluminum or Bronze

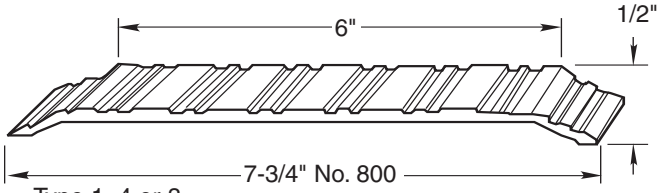

Type 1, 4 or 3

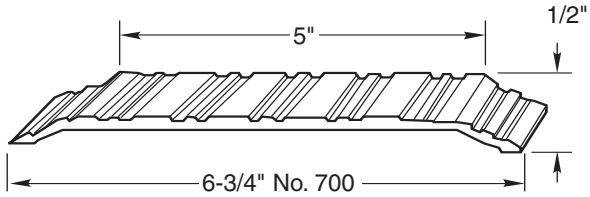

Type 1, 4 or 3

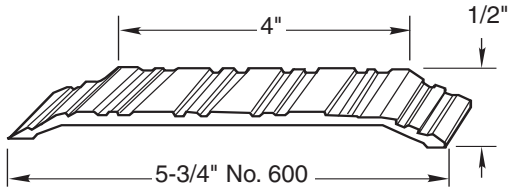

Type 4

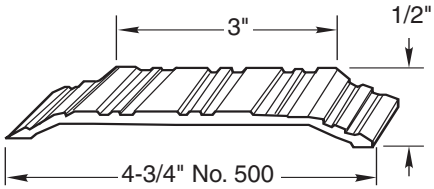

Type 5

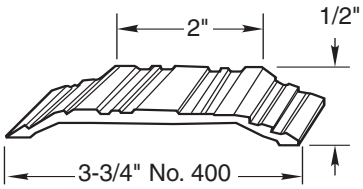

Type 5

Stainless Steel

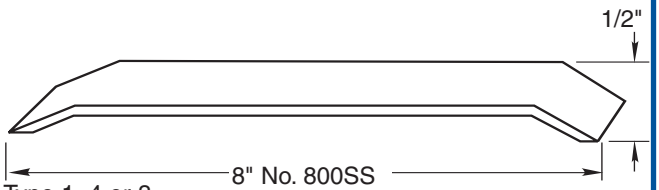

Type 1, 4 or 3

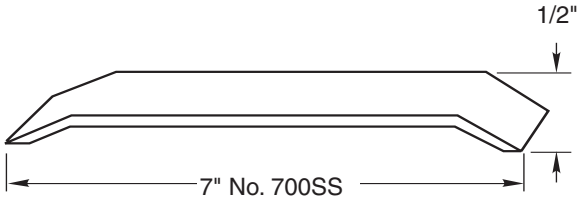

Type 1, 4 or 3

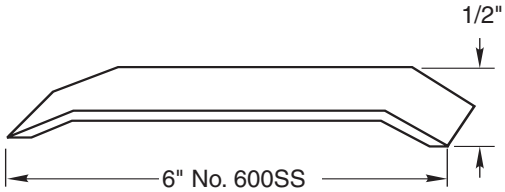

Type 4

*Type 5 not available in stainless steel

Height will be 1/4" when physically handicapped (PH) is specified.

EXTRA-WIDE THRESHOLDS

Special widths of 8-3/4", 9-3/4", 10-3/4", 11-3/4" or 12-3/4" are available on request. A 5/16" x 1-1/2" center bar support is provided as standard. Detailed dimensions required. Not available with Type 5.

Types 1 and 4

For use with center hung closers (Nos. 26, 28, H28, 30, 40, H40 & 50), independently hung closers (327 & 53) and pivot sets (Nos. 117-3/4 & H117-3/4)

Type 1

(For doors hung in center of frame)
Can be furnished with No. 201 stop strip on single acting doors (specify door thickness) and No. 301-1/2" step down for special 1/2" sill conditions *(see page 173).* Straight ends furnished in lieu of mitered returns. Specify overall length (jamb to jamb).

Technical Information

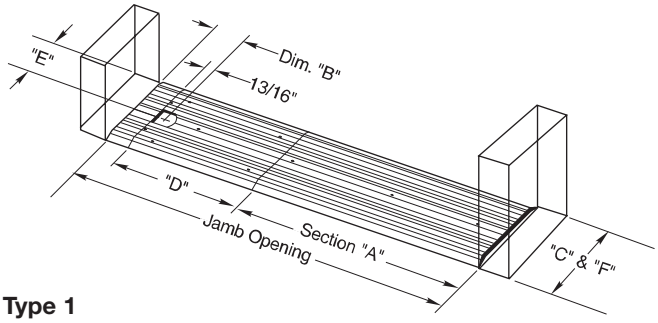

Type 1
Left hand shown.

Type 4

(For doors hung flush with face of frame)
Can be furnished with No. 201 stop strip (specify door thickness) on single acting doors. No. 301-1/2" step down can be furnished for special 1/2" sill conditions *(see page 173).* Four corner miter returns or straight ends can be furnished. Specify overall length (jamb to jamb).

Technical Information

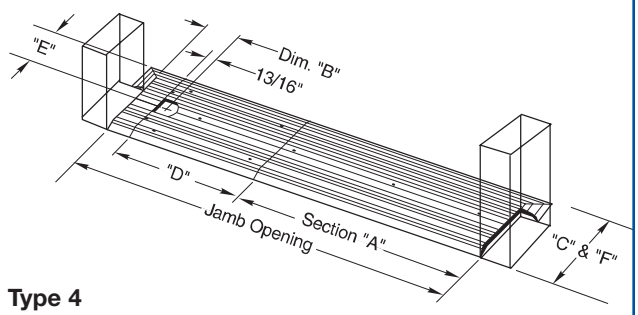

Type 4
Left hand shown.

Specification Details

For Center Hung Closers or Pivot Sets	Threshold Type	With No. 201 Stop Strip		dim. "C", "F"	dim. "E"	dim. "D"	dim. "B" min.
Nos. 26 and 28	1 or 4 x 700 Normal	No. 700 for doors 2-1/4" thick or less.		6-3/4	3-3/8	10-1/16	2-3/4
	1 or 4 x 800	No. 800 for doors 3" thick or less.		7-3/4	3-7/8		
No. 30	1 or 4 x 600 Normal	Stop Strip Not Used		5-3/4	2-7/8	13-3/16	2-3/4
	1 or 4 x 700			6-3/4	3-3/8		
No. 40	1 or 4 x 700 Normal	Stop Strip Not Used		6-3/4	3-3/8	15-7/16	2-3/4
	1 or 4 x 800			7-3/4	3-7/8		
No. 50 No. 117-3/4 pivot set	1 or 4 x 600 Normal	No. 201 Stop Strip for 1-3/4" doors–for larger doors use next size as listed		5-3/4	2-7/8	Consult Factory	2
	1 or 4 x 700	No. 700 for doors 2-1/4" thick or less.	Made single acting with stop strip	6-3/4	3-3/8		
	1 or 4 x 800	No. 800 for doors 3" thick or less.		7-3/4	3-7/8		

Note: When ordering threshold for 327 or 53 closers, you must specify what size butt is being used and degree of swing.

Types 3 & 5

For use with offset hung closers (Nos. 20, 25, L25, 27, H27, L27, Q27 & 51), and pivot sets (Nos. 117-1/2 & L117)

Type 3

For use with all offset closers and pivot sets listed above. Can be furnished with No. 200 stop strip (specify door thickness) and No. 301 step down for special 1/2" sill conditions *(see page 173)*. 1-1/8" mitered returns on both ends furnished as standard. Specify if straight ends are required and state length. Specify if 1-1/2" offset is required. Specify overall length (jamb to jamb).

Technical Information

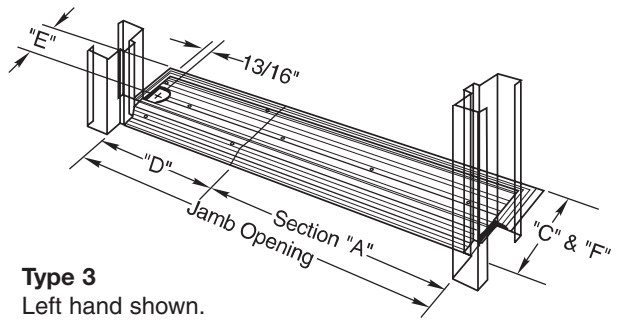

Type 3
Left hand shown.

Type 5

For use with offset closers and pivot sets listed above. Can be furnished with No. 200 stop strip (specify door thickness) *(see page 173)*. 1-1/8" mitered returns are furnished as standard on both ends. Specify if straight ends are required and state length. Specify if 1-1/2" offset is required. Cannot be used with No. 301 step down. Not available in stainless steel. Cannot be ordered in wider widths. Specify overall length (jamb to jamb).

Technical Information

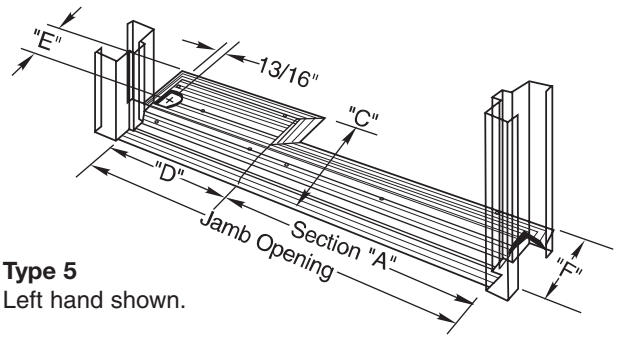

Type 5
Left hand shown.

Specification Details

FOR 3/4" OFFSET (3/4" from center of spindle to face of door) Nos. 20, 25, L25, 27, H27, L27 closers Nos. 117-1/2, L117 pivot sets, dim. "D"–10-1/16". Q27, 51, Dim. "D" varies–consult factory	Door Thickness	1-3/4"				2"				2-1/4"			
	Threshold Type	5 x 400 normal or 5 x 500		3 x 700 normal or 3 x 800		5 x 400 normal or 5 x 500		3 x 700 normal or 3 x 800		5 x 500		3 x 800	
	Stop Strip (if used)		x no. 200		x no. 200		x no. 200		x no. 200		x no. 200		x no. 200
	dim. "C"	6-3/4 or 7-3/4	7-1/8 or 8-1/8	6-3/4 or 7-3/4	7-1/8 or 8-1/8	6-3/4 or 7-3/4	7-1/8 or 8-1/8	6-3/4 or 7-3/4	7-1/8 or 8-1/8	7-3/4	8-1/8	7-3/4	8-1/8
	dim. "E"	3-1/8	3-5/16 or 4-5/16	3-5/16 or 3-1/8	3-5/16 or 4-5/16	3-1/8	3-1/16 or 4-1/16	3-1/16 or 3-1/8	3-1/16 or 4-5/16	3-1/8	3-13/16	3-1/8	3-9/16
	dim. "F"	3-3/4 or 4-3/4	4-1/8 or 5-1/8	6-3/4 or 7-/3/4	7-1/8 or 8-1/8	3-3/4 or 4/3/4	4-1/8 or 5-1/8	6-3/4 or 7-/3/4	7-1/8 or 8-1/8	4-3/4	5-1/8	7-3/4	8-1/8
FOR 1-1/2" OFFSET (1-1/2" from center of spindle to face of door) Nos. 20, 25, 27, closers. Nos. 117-1/2, pivot sets, dim. "D"–10-1/16". 51 dim. "D" varies–consult factory	Door Thickness	1-3/4"				2"				2-1/4"			
	Threshold Type	5 x 500		3 x 800		5 x 500		3 x 800		5 x 500		3 x 800	
	Stop Strip (if used)		x no. 200		x no. 200		x no. 200		x no. 200		x no. 200		x no. 200
	dim. "C"	7-3/4	8-1/8	7-3/4	8-1/8	7-3/4	8-1/8	7-3/4	8-1/8	7-3/4	8-1/8	7-3/4	8-1/8
	dim. "E"	3-1/8	3-9/16	3-1/8	3-9/16	3-1/8	3-5/16	3-1/8	3-5/16	3-1/8	3-1/16	3-1/8	3-1/16
	dim. "F"	4-3/4	5-1/8	7-3/4	8-1/8	4-3/4	5-1/8	7-3/4	8-1/8	4-3/4	5-1/8	7-3/4	8-1/8

Threshold Type

Offset Floor Closers

3 x 700	5 x 400
3 x 700SS	
3 x 800	5 x 500
3 x 800SS	

Center Hung Floor Closers

1 x 600	4 x 600
1 x 600SS	4 x 600SS
1 x 700	4 x 700
1 x 700SS	4 x 700SS
1 x 800	4 x 800
1 x 800SS	4 x 800SS

Ordering Information

Indicate the following:

1. Type
2. Material–aluminum, bronze, stainless steel (abrasive, if required)
3. PH prefix for 1/4" height
4. Length of opening (jamb to jamb, not stop)
5. Stop strip, if required
6. Door thickness (1-3/4" standard)
7. Hands (Right, Left) or Pair
8. Type of closer/pivot being used
9. Miter or straight ends (if other than standard configuration)
10. For center hung with “B” section other than standard, advise length of “B” section
11. Specify if 301 is used on inswing doors
12. Special anchoring (MSES)

On openings involving banks of doors, submit elevations to facilitate shop drawings and ensure proper pricing.

PH shall comply with ANSI 117.1.

Special Thresholds: Rixson® can design special thresholds to suit virtually any situation. If your requirements are other than standard, please send a drawing or sketch showing the special condition. We will prepare installation drawings for your approval.

Material

Mill Aluminum
Mill Bronze
Stainless Steel

Example

3 x 700, US3, PH, 72", 2" thick door, pair, 27SHO

* US3, US4, or US10B finishes are on bronze based thresholds.
Polished aluminum or polished stainless steel should be ordered to match US26 or US32 hardware.

PREFIX		TYPE		WIDTH		STOP STRIP		DOOR OPENING WIDTH		DOOR THICKNESS		HAND		CLOSER		FINISH
PH	x	3	x	700	x	200	x	36"	x	1-3/4	x	RH	x	27N	x	AL

PREFIX:
Blank = 1/2 high
PH = 1/4 high

TYPE:
1 = Center hung
3 = Offset hung
4 = Center hung
5 = Offset hung

WIDTH:
400 = 3-3/4"(used with #5 or without floor closer)
500 = 4-3/4"(used with #5 or without floor closer)
600 = 5-3/4"(can’t be used with #5 or with floor closer)
700 = 6-3/4"
800 = 7-3/4"

STOP STRIP:
Blank = No stop
200 = For use with 3 & 5 only
201 = For use with 1 & 4

HAND:
Blank = Pair
RH = Right hand
LH = Left hand

FINISH:
AL = Mill aluminum
BZ = Mill bronze
SS = Stainless steel-plated finish on bronze base