RIXSON®

Specialty Closers

Complete Door Control

for Interior Doors

Where Concealment

Is Desired

Introduction

These specialty closers are designed for interior doors that have lower usage (10-500 cycles a day). They are perfect for high-end residential or interior office spaces. They are unique in performance and design. With case depths of 3 inches or less, they are ideal for thin slab applications. In both the UNI and DUO, instructions are included for wood floor installations.

The Dwarf or Gate Closer 350 Series is side mounted for gates that are off the floor 6 inches or more. Used in thousands of courtrooms all over the world, this closer has withstood the tests of time.

These closers are the oldest in the Rixson® line. Their performances have endured almost a century of life and continue to be viable solutions for interior doors that just don't need the more robust units or their accompanying higher prices.

When design is job one, check out these alternative closers.

Contents

Page

Specialty Closers: General Information **82**
How to Select Product 83
67/68 Uni-Check® Offset Hung Floor Closers 84
10/12/15/16 Duo-Chek® Center Hung Floor Closers 85
354/355 Gate Closers 86
356/357 Gate Closers 87
359 Gate Closers 88
Parts Drawings **89-93**
Product Specification **94**
Quick Reference of Options **95**

1. Offset vs. Center Hung Application

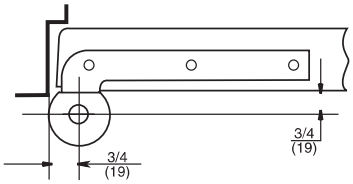

3/4" Offset
Pivot point located 3/4" from the heel edge of the door and 3/4" from face of door.

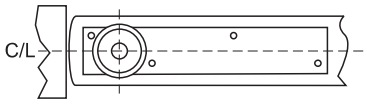

Center Hung
Pivot point centered in thickness of door. (Not for use on fire doors.)

2. Size of Door (width, height, thickness)

Door Material	Door Thickness 1-3/8"	1-3/4"	2"	2-1/4"	2-1/2"
	Weight-per-square-foot (in pounds):				
Aluminum		3-1/2			
Ash	4-1/2	5-1/4	6	6-3/4	7-1/2
Birch	3-3/4	4-1/2	5	5-3/4	6-1/4
Hollow Metal	6-1/2	6-1/2		6-1/2	
Oak	6	7	8	9	10
Pine	3	3-1/2	4	4-1/4	5

3. Expected Frequency of Door Operation

Application	Daily	Yearly	
Large department store entrance	5,000	1,500,000	
Large office building entrance	4,000	1,200,000	
Theater entrance	1,000	450,000	
School entrance	1,250	225,000	High
School restroom door	1,250	225,000	
Store or bank entrance	500	150,000	
Office building restroom door	400	118,000	
School corridor door	80	15,000	
Office building corridor door	75	22,000	Average
Store restroom door	60	18,000	
Residential entrance door	40	15,000	
Residential restroom door	25	9,000	
Residential hallway door	10	3,600	Low
Residential closet door	6	2,200	

67/68 Uni-Check®
Offset Hung Floor Closers

Model 67

Application
Single Acting, Handed
Low/Medium Traffic Interior Doors
Weight to 150 lbs.
Door Width up to 3'4"(1016mm)

ANSI/CO6042
F Series CO6052

Product Description & Features
- Available non hold-open (NHO), or automatic hold open (AHO) at 85, 90, 100, 110, 120 or 180° (Specify degree) If not specified 180° HO will be furnished
- Standard top pivot: 180 included
- Intermediate pivot required: 119. For fire rated assemblies, use FM19 (order separately) see page 22
- 3/4" offset only
- Floor closers are fully concealed to maintain pleasing aesthetics of opening
- Full weight of door is borne by floor closer, providing trouble-free operation and long life
- Screws are in shear in floor closer installation and are less likely to pull out
- Steel cement case
- Single valve closing speed adjustment
- Can swing to 180°, trim permitting
- Available for fire door assemblies. Prefix "F". (Comes with F180 top pivot)
- 20-minute applications suffix -20
- Not available "SC", "DA", "CWF"
- For A.D.A. compliance of 5-pound opening force specify PH67
- Doors over 60" in height require the use of one intermediate pivot. Every 30" of door height warrants an additional intermediate pivot
- 1-3/4" door thickness

Technical Information
(Click here to view template)

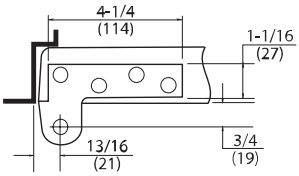

Frame stop required

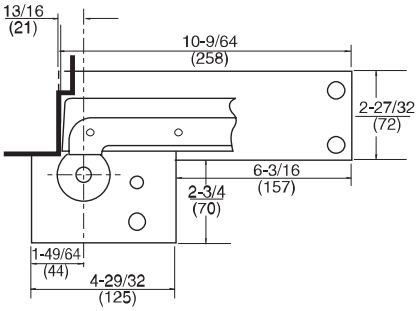

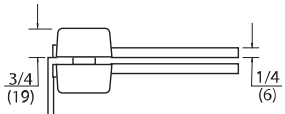

Bevel door 1/8" in 2"

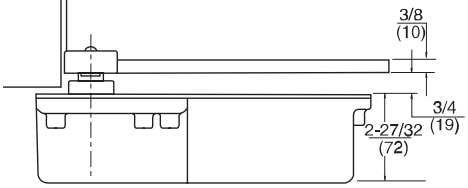

Extended spindles available in 1/2"(13mm) increments up to 2"(51mm)

Furnished with wood and machine screws

Model 68

Application
Weight to 175 lbs.
Door width up to 4'0"(1219mm)

ANSI/CO6042
F Series CO6052

Product Description & Features
Identical to Model 67 except:
- Stronger spring size to accommodate wider door
- "PH" not available

10/12/15/16 Duo-Chek®
Center Hung Floor Closers

Models 10 & 12

Application
Double Acting, Non-handed
Low/Medium Traffic Interior Doors
Weight to 125 lbs.
Sizes up to 2'10"x 7'0"
(864 x 2134mm)

ANSI/CO6012
Shipping wt. 18 lbs.

Product Description & Features
- Model 10 is 90° automatic hold open; 12 is non hold-open
- Standard top pivot: 101020 walking beam type
- Not allowed for use on labeled fire doors
- Steel cement case
- Adjustable closing speed
- Centering adjustment
- 105° maximum opening
- For A.D.A. compliance of five-pound opening force specify PH10 or PH12
- 1-3/4" door thickness

Technical Information
(Click here to view template)

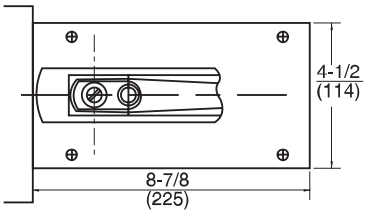

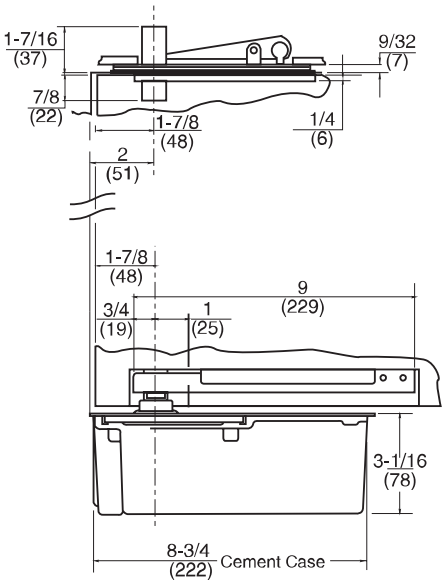

Models 15 & 16

Application
Weight to 125 lbs.
Sizes up to 2'11" to 3'6" x 7'0"
(889 to 1067 x 2134mm)

ANSI/CO6012
Shipping wt. 18 lbs.

Product Description & Features
Identical to Models 10 & 12 except:
- Stronger spring to accommodate wider door
- 15 is 90° automatic hold open; 16 is non hold-open
- "PH" not available

Extended spindles available in 1/2"(13mm) increments up to 2"(51mm)

Furnished with wood and machine screws

354/355
Gate Closers

Model 354

Application
Double Acting, Non-handed
Maximum weight: 75 lbs.
Dwarf doors from 2'2" to 3'0" wide (660 x 914mm)

ANSI/CO9503
Shipping wt. 6 lbs.

Product Description & Features
- Surface mounted top pivot: 3541020
- Recommended for office rail gates, partitions, and lavatory stall doors
- 1-3/4" door thickness
- Maximum opening 90°
- Arm adjustment. Door normally comes to rest at closed position. If door is to remain open, arm is set on spindle so door comes to rest at 90°
- Package also includes closer bracket and flange style arm
- Carry full weight of door when pivotal hung
- Quiet control; no slamming or flapping
- All moving parts enclosed and fully immersed in lubricating checking fluid
- Painted finishes only

Technical Information

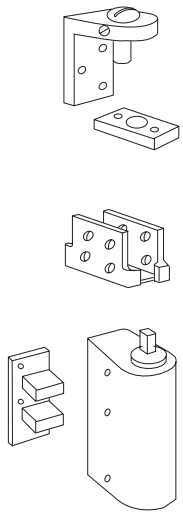

Model 355

Application
Double Acting, Non-handed

ANSI/CO9503
Shipping wt. 6 lbs.

Product Description & Features
Identical to 354 except:
- Mortise top pivot: 3551020

(Click here to view template)

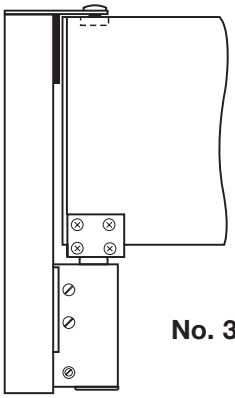

No. 354

(Click here to view template)

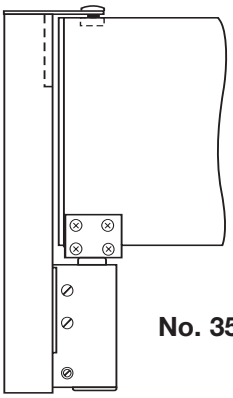

No. 355

MODEL 356

Application
Double Acting, Non-handed
Maximum weight: 75 lbs.
Dwarf doors from 2'2" to 3'0" wide (660 x 914mm)

ANSI/CO9503
Shipping wt. 6 lbs.

Product Description & Features
- Surface mounted top pivot: 3541020
- Recommended for office rail gates, partitions, and lavatory stall doors
- 1-3/4" door thickness
- Arm can be adjusted so that door stands ajar at any degree
- Package also includes closer bracket and arm that may be surface mounted or mortised
- Maximum opening 90°
- Carry full weight of door when pivotal hung
- Quiet control; no slamming or flapping
- All moving parts enclosed and fully immersed in lubricating checking fluid
- Painted finishes only

Technical Information

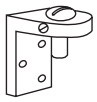

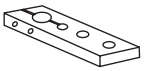

MODEL 357

Application
Double Acting, Non-handed

Product Description & Features
Identical to 356 except:
- Mortise top pivot: 3551020

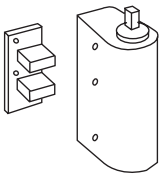

ANSI/CO9503
Shipping wt. 6 lbs.

(Click here to view template)

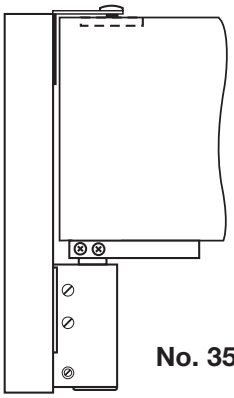

No. 356

(Click here to view template)

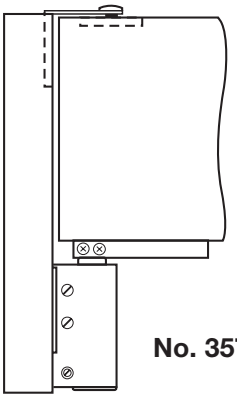

No. 357

MODEL 359

Application
Single Acting, Non-handed
Maximum weight: 75 lbs.
Dwarf doors from 2'2" to 3'0" wide (660 x 914mm)

ANSI/C06071
Shipping wt. 5-1/2 lbs.

Product Description & Features
- Recommended for office rail gates, partitions, and lavatory stall doors
- 1-3/4" door thickness
- Maximum opening 140°
- Surface mounted to edge of partition with edge wide enough for 1-1/2" bracket
- Door hanging means by others
- Track style arm
- Package includes closer, bracket, and slide track arm

Technical Information

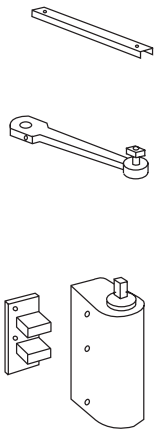

(Click here to view template)

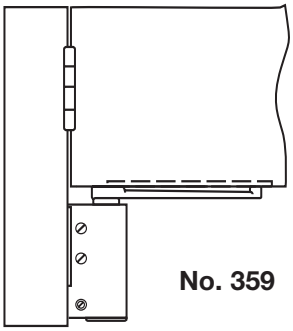

Model 10, 12, 15, 16 Duo-Chek®

Top Pivot Screw Kit
107329

Arm Screw Kit
107054

Floor Plate Screw Kit
*107004 -**

** specify finish*

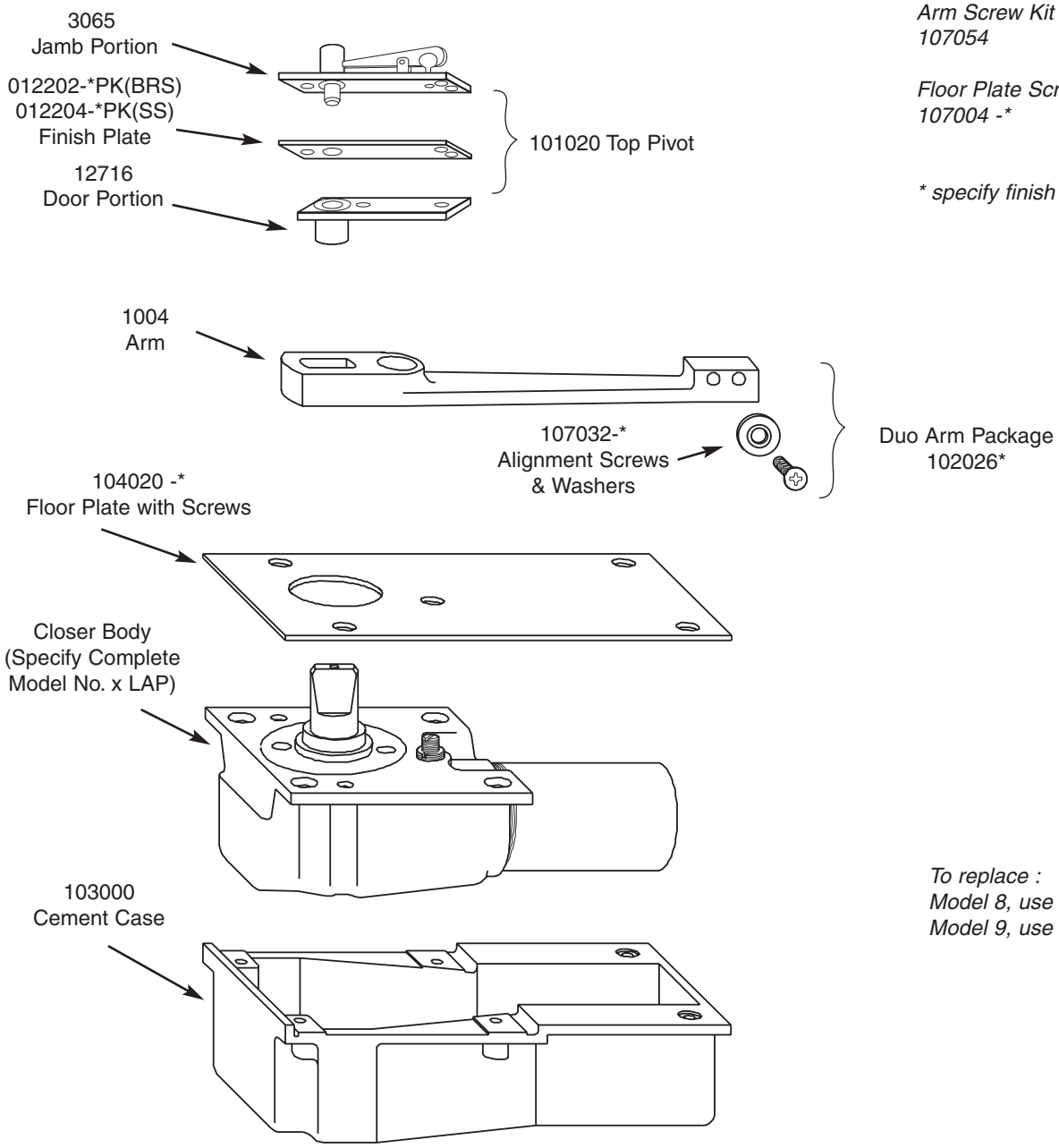

To replace :
Model 8, use PH 10
Model 9, use PH 12

Model 67, 68 Uni-Check®

Right Hand Shown
3/4" Offset Only

180 Screw Kit
*107014 - * Machine (2 required)*
*107114 - * Wood (2 required)*

Arm Screw Kit
107044 Machine
107144 Wood

Floor Plate Screw Kit
*107050 -**

** specify finish*

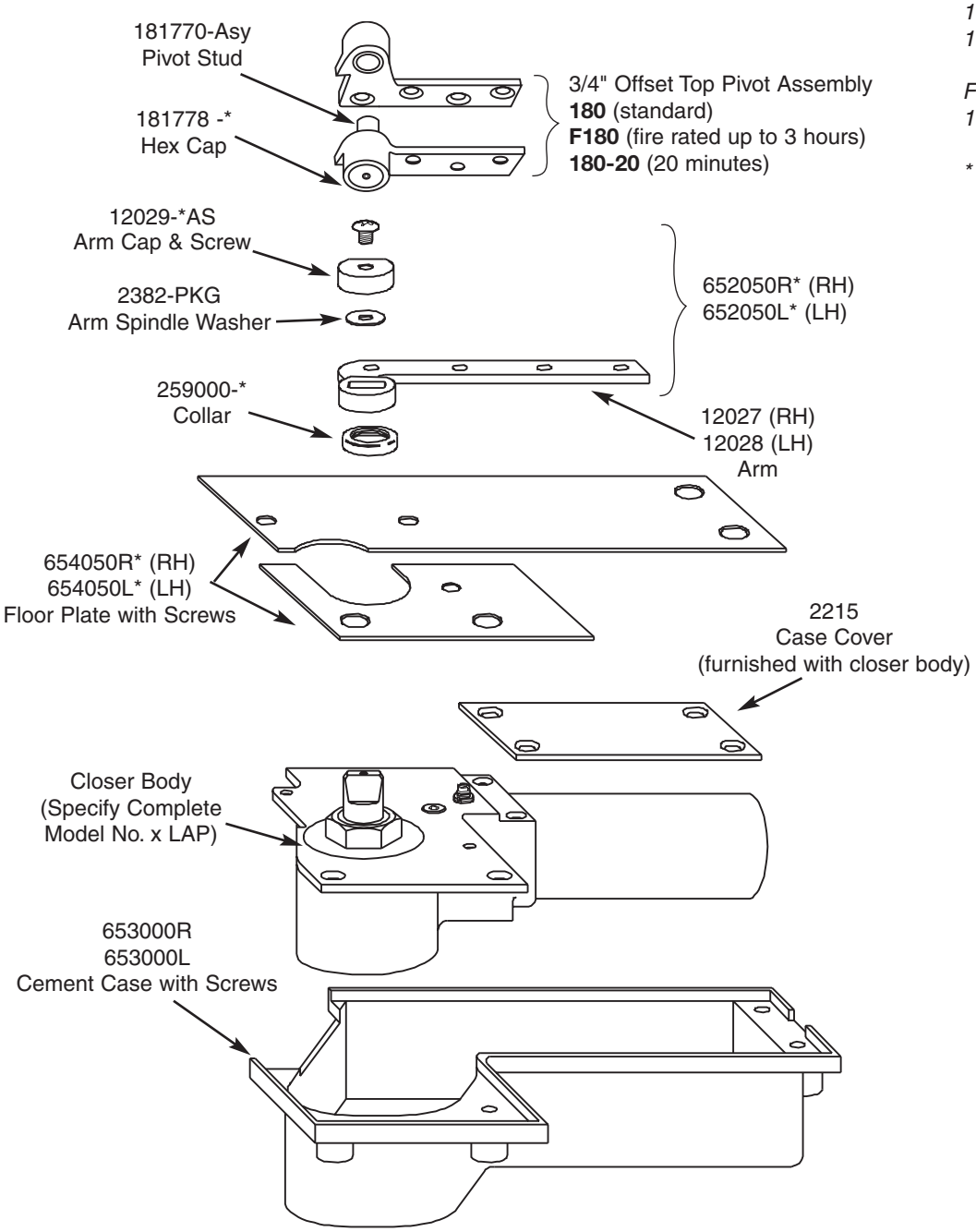

To replace a model 65 or 66, use PH 67

MODEL 354

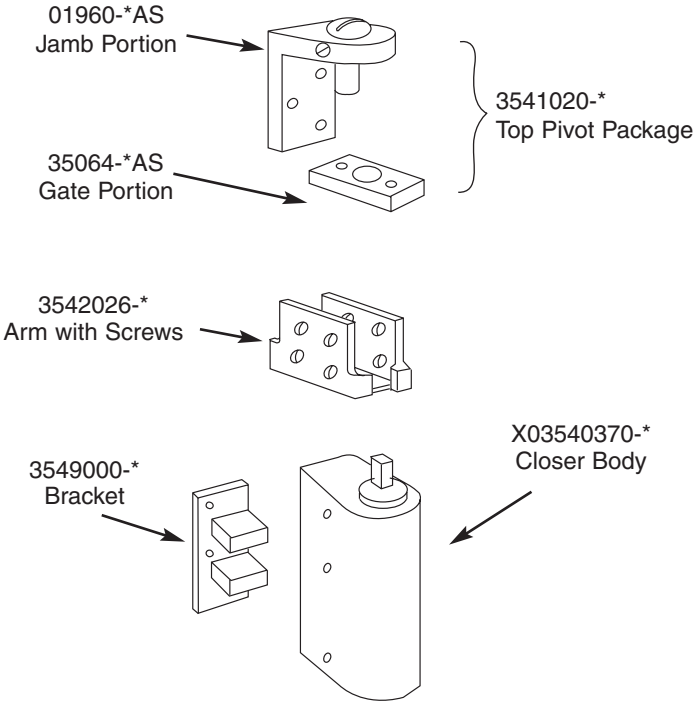

Top Pivot Screw Kit
*107017 -**
Closer Mtg. Screw Kit
107350

** specify finish*

MODEL 355

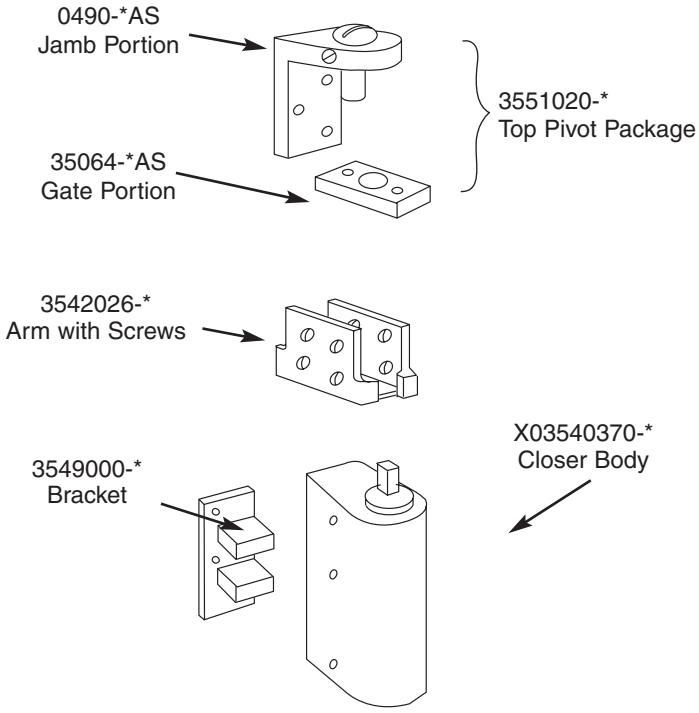

Top Pivot Screw Kit
*107017 -**
Closer Mtg. Screw Kit
107350

** specify finish*

Model 356

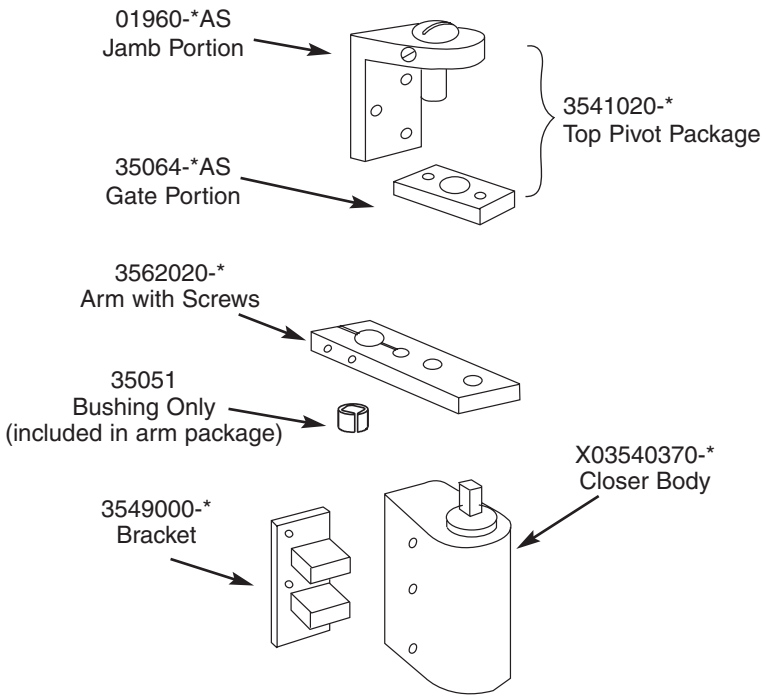

Top Pivot Screw Kit
*107017 - **

Arm Screw Kit
107359

Closer Mtg. Screw Kit
107350

** specify finish*

Model 357

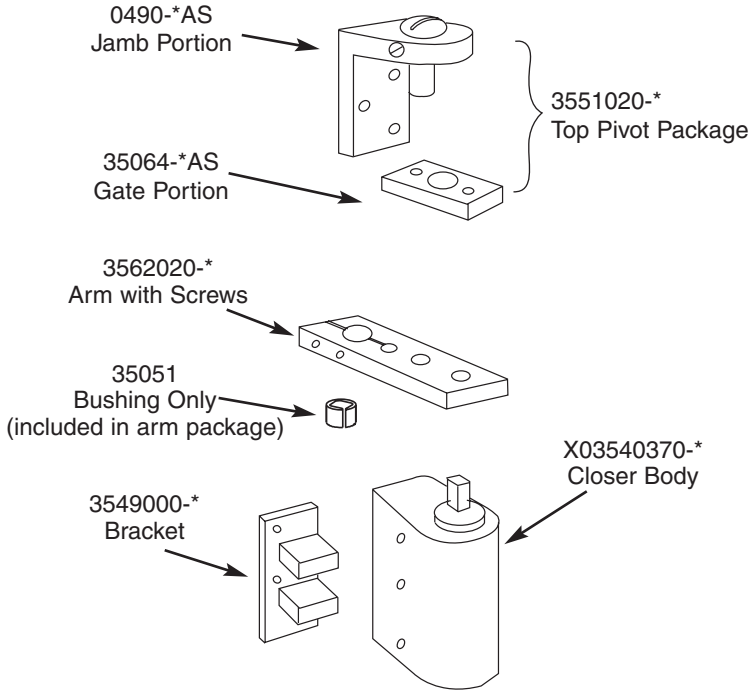

Top Pivot Screw Kit
*107017 - **

Arm Screw Kit
107359

Closer Mtg. Screw Kit
107350

** specify finish*
sprayed finishes only

Model 359

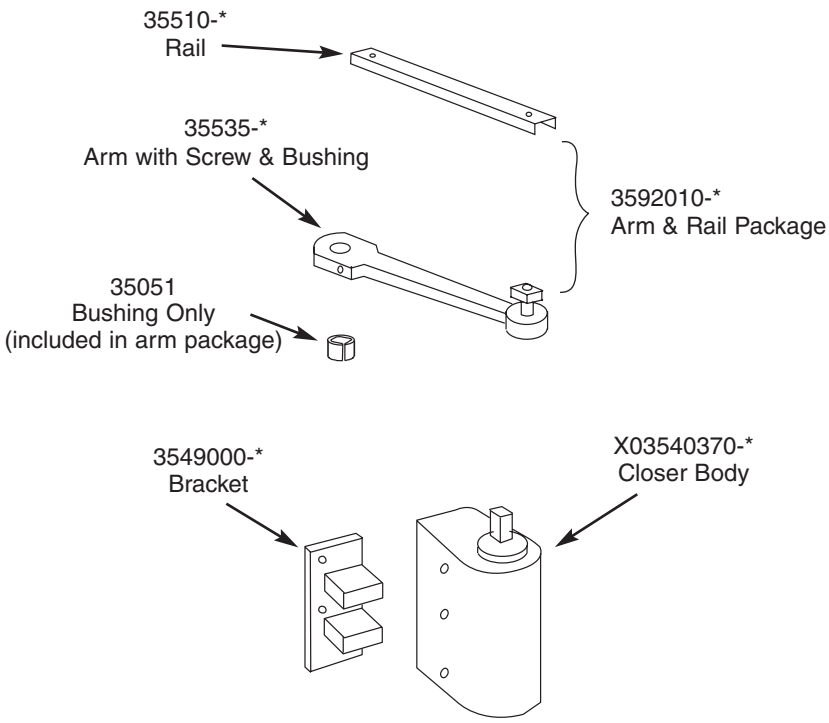

Arm Screw Kit
107003

Closer Mtg. Screw Kit
107350

** specify finish*

SUGGESTED SPECIFICATION

Uni-Check® Closers

Concealed Floor Closer for single acting offset hung doors shall be Rixson® *Uni-Check* Series and shall have:

- Steel cement case designed to mount in concrete slab or wood floor construction with depth of less than 3"
- Closer mechanism to allow door opening of up to 180°
- Single closing speed control valve
- Built-in hold open mechanism to hold door open at 85, 99, 100, 110, 120, or 180°
- Assemblies available for labeled fire doors
- Assemblies for opening forces of 5 pounds to comply with ADA requirements

Duo-Chek® Closers

Concealed Floor Closer for single or double acting center hung doors shall be *Rixson Duo-Chek* Series and shall have:

- Steel cement case with 3-1/16" depth designed to be mounted in concrete slab or wood floor construction
- Closer mechanism to allow 105° door swing in both directions
- Independent closing speed valve for each direction of door swing
- Built in hold open mechanism at 90° for either direction of door swing or both directions

Dwarf Door Closers

Closers for partial height partitions and office rail gates shall be *Rixson* Dwarf Gate Closer Series 350 and shall have:

- Hydraulic mechanism with single closing speed adjustment valve
- Automatic centering to allow door to stay in closed position (or 90° open)
- Special arm available to allow door to be held open at user needed degree
- Top pivot assembly designed for surface or mortised application

Quick Reference of Options

Reference

Prefix	Model	non hold-open Hold Open	Offset	Suffix	Handed	Finish
F, PH (67 only)	**67, 68**	NHO or HO*	3/4 only	NHO, AHO, Ext Spdl, -20	Yes	Plated
PH (10 only)	**10, 15**	90° HO only		AHO, Ext Spdl	No	Plated
PH (12 only)	**12, 16**	NHO only		NHO, Ext Spdl	No	Plated
	350	NHO only			No	Sprayed*

* Specify 85, 90, 100, 110, 120 or 180°

Sample

PH	67	90	A	RH	626
prefix	model	degree	hold open or non hold-open	hand	finish

Abbreviations

"F"	Fire-rated Doors
-20	20-Minute Doors
A	Automatic Hold Open
N	non hold-open
PH	Physically Handicapped

Finishes

U.S. Standard	Description	BHMA Code
US3	Bright brass, clear coated	605
US4	Satin brass, clear coated	606
US10	Satin bronze, clear coated	612
US10B	Satin oxidized bronze, oil rubbed	613
US26	Bright chrome plated	625
US26D	Satin chrome plated	626
SA	Sprayed aluminum	689*
SB	Sprayed bronze	690*
SLB	Sprayed light bronze	691*
SG	Sprayed gold	696*