STANLEY®

Security Solutions

PRECISION HARDWARE

EXIT DEVICES

RELIANT 5000 SERIES

STANLEY

phi™

TABLE OF CONTENTS

EXIT DEVICES & TRIMS — **Page**
- Rim Devices 4, 5
- Surface Vertical Rod Devices 6, 7

MULLIONS
- Fire Labeled Removable Mullion 8
- Key Removable Mullion 8
- Removable Mullion 8

EXIT DEVICE OPTIONS
- **ALK** Exit Alarm 10
- **CD** Cylinder Dogging 9
- **LD** Less Dogging 9
- **TDS** Touchbar Monitoring Double Switch 10
- **TS** Touchbar Monitoring 10
- **WALK** Exit Alarm 10
- **WTDS** Weatherized Touchbar Mon. Double Switch 10
- **WTS** Weatherized Touchbar Monitoring 10

ACCESSORIES — **Page**
- **ALK** Exit Alarm Kit 10
- **CDK** Cylinder Dogging Kit 9
- Cylinders 11
- Miscellaneous Components 9
- Sex Nuts & Bolts 3
- Strikes 9

ADDITION INFORMATION
- Device Dimensions 3
- Device Minimum Stile Width 11
- Fasteners 3
- Finishes 3
- Fire Label Rating Chart 3
- Touchbar Clearance 2
- Trim Dimensions 5, 7

INTRODUCTION

The Reliant 5000 Series is the Exit Device of choice when an economical and reliable exit device is required. All Reliant 5000 Series Exit Devices are UL listed for panic and fire hardware and are certified to ANSI A156.3 Grade 1. The Reliant Series is available in durable powder coat finishes with a variety of trim styles and functions. The chassis is constructed of stainless steel and covers the standard type 161 door preperation.

Touchbar Clearance

The Reliant Exit Devices accommodate doors with vision lites or glass windows, where the vision lite frames or moldings project up to 1/4″ beyond the face of the door. Active Case and End Cap Mounting Bracket are mounted on the face of the door without any shims or cutting off the glass molding. These devices have a 1/4″ gap between the face of the door and the Touchbar Assembly. This gap allows proper functioning of the devices even on doors which are not perfectly flat. Since the Active Case is mounted directly on the face of the door, it accommodates standard lengths of through bolting screws, lever, and cylinder tail pieces.

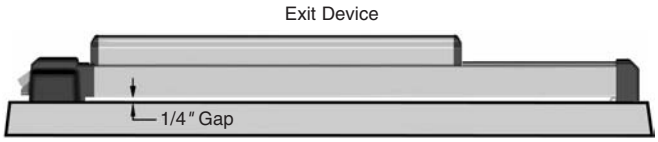

Quiet Operation

Sound Dampeners reduce the noise associated with Exit Device operation on the depression and return stroke of the Touchpad.

Device Dimensions

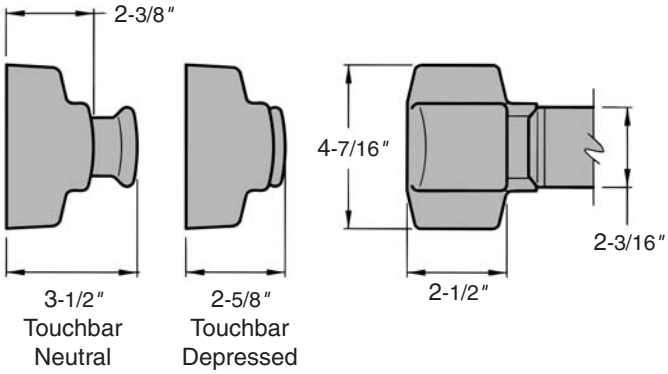

Device Active Case

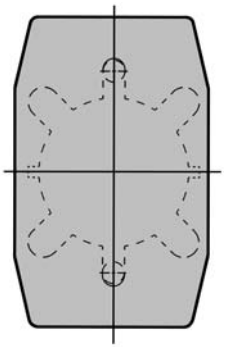

Active Case covers ANSI A115.2 (Type 161) or ANSI A115.18 cylinder lock preparation. Active Case through bolts in ANSI A115.18 preparation without additional machining. Specify Cover Plate or Trim to cover outside cutout.

Finishes

ANSI/BHMA	Description
600	Primed for Paint
689	Aluminum Paint
695	Dark Bronze Paint

Door Sizes

Stock sizes for door widths and heights are listed below. If required, cut to size in the field.

Door Widths	Stock Sizes
2′-7″ to 3′-0″	3′-0″
3′-1″ to 4′-0″	4′-0″

Fasteners

Furnished standard with machine screws and full thread wood/sheet metal screws. Specify Sex Nuts and Bolts (SNB) where recommended or required by the door manufacturer.

Vertical Rod Devices

Device	Door Heights	Stock Sizes
Surface Vertical Rod Device*	up to 7′-0″	7′-0″
	7′-1″ to 8′-0″	8′-0″
	8′-1″ to 10′-0″	10′-0″

Sex Nuts & Bolts (not furnished std.)

Sex Nuts & Bolts are furnished with No. 10-24 x 1″ OHMS (1-1/2″ long screws required for guides).

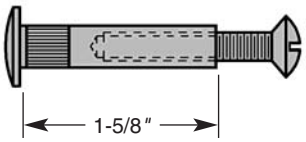

Hand of Doors

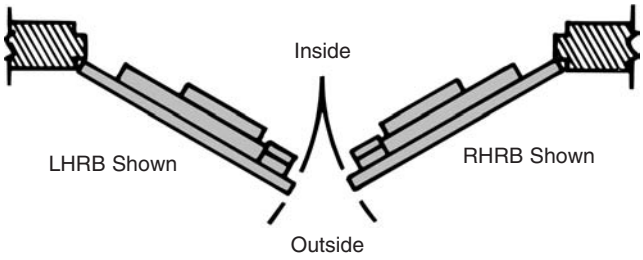

FIRE LABEL RATING

Type and Application	Door Opening	Exit Device Series	UL Fire Door Rating (A) 3 Hour	(B) 1-1/2 Hour	(C) 3/4 Hour	(D) 1-1/2 Hour	(E) 3/4 Hour	20 min. Door
Single Door								
Rim Device	4′-0″W x 10′-0″H	FL5100	•	•	•	•	•	•
Pair Of Doors								
Two Rim Devices with Mullion	8′-0″W x 8′-0″H	FL5100 x FL822, FLKR822	•	•	•	•	•	•
Two Surface Vertical Rod Devices Swinging in the Same or Opposite Direction	8′-0″W x 10′-0″H	FL5200, FL5200LBR	•	•	•	•	•	•

All Fire Exit Hardware conforms to UL10C and UBC 7-2.
Consult with Door Manufacturer for specific limitations on Fire Door Assemblies.

RIM EXIT DEVICES

S458
Optional

S988
Optional

S300
Standard

Reliant 5100 Series – *Non Handed*
Reliant FL5100 Fire Exit Series – *Non Handed*

DOORS - For all types of single and double doors with a mullion. For mullions, see page 8. Available for 1-3/4″ to 2-1/4″ thick, up to 4′-0″ wide openings. For thicker doors, consult factory. Furnished standard for 1-3/4″ thick, 3′-0″ wide openings.

ACTIVE CASE & TRIM - Covers ANSI A115.2 (Type 161) or ANSI A115.18 cylinder lock preparation. Active Case through bolts in ANSI A115.18 preparation without additional machining.

FUNCTIONS - Universal Exit Device, add Trim for the desired function.

ACTIVE CASE COVER & ENDCAP - High Impact Thermoplastic.

ACTIVE CASE - Stainless Steel.

TOUCHBAR SUB-ASSEMBLY - Zinc Dichromate plated Heavy Wrought Steel.

TOUCHBAR ASSEMBLY - Powder Coated Heavy Wrought Steel.

STRIKES - No. S300, Investment Cast Stainless Steel, Black Powder Coated furnished standard. No. S988, optional strike for use on Aluminum Door applications, specify when ordering. No. S458, optional strike for use on Mullion applications, specify when ordering. For optional strike information see page 9.

LATCHBOLT - Stainless Steel, Deadlocking, 3/4″ throw.

DOGGING - 1/4 turn hex key dogging standard. NOT available on Fire Exit Hardware.

TOUCHBAR HEIGHT - 40-5/16″ from floor standard. May be varied as situation dictates.

UL LISTED - Panic and Fire Exit Hardware. For FIRE EXIT HARDWARE Ratings see page 3. Conforms to UL10C and UBC 7-2.

ANSI/BHMA - Devices are BHMA certified for ANSI 156.3, Grade 1.

FINISHES - 689 Aluminum Powder Coat, 695 Dark Bronze Powder Coat.

CYLINDERS - See page 11.

STILE WIDTH - See Stile Information on page 11.

DEVICE OPTIONS

Suffix	Description	Page
ALK	Exit Alarm: battery operated	10
ALW	Exit Alarm: remote power	10
CD	Cylinder Dogging	9
FL	Fire Exit Hardware	3,4
LD	Less Dogging	9
TDS	Touchbar Monitoring Double Switch	10
TS	Touchbar Monitoring Switch	10
WTDS	Weatherized Touchbar Mon. Dbl. Switch	10
WTS	Weatherized Touchbar Monitoring Switch	10

How To Order – 5100 Series

5108	ALK	808	RHRB	689	S300	
Device No.	Device options	Trim No.	Handing	Finish	Strike	Door Size
5101– exit only **5102**– dummy trim **5103**– key retracts latchbolt **5108**– key locks/ unlocks lever **5114**– no cylinder lever always active	See above	**501** – cover plate **602** – trim no key **603** – trim w/key **702A** – handle no key **703A** – handle w/key **808A** – lever w/key **814A** – lever no key	RH LH RHRB LHRB	689 690 691 693 695 696	**S300** – rim/top (std.) **S301** – rim/top (opt.) **S458** – rim (optional) **S459** – non fire (optional) **S460** – bottom (std.) **S988** – roller (opt.)	3′0″ x 7′0″ x 1 3/4″

Device Only: Device no., hand, finish, strike, and door size including thickness: (e.g. FL5108 x RHRB x 689 x S300 x 3′-0″ x7′-0″ x 1-3/4″)
Trim Only: Trim no., hand, finish, and door thickness: (e.g. 808A x RHRB x 689 x 1-3/4″) * 5103 & FL5103 Cylinder Only Application includes Cylinder Attachment Kit “CA-03”.

Trims are certified to ANSI/BHMA A156.3, Grade 1.

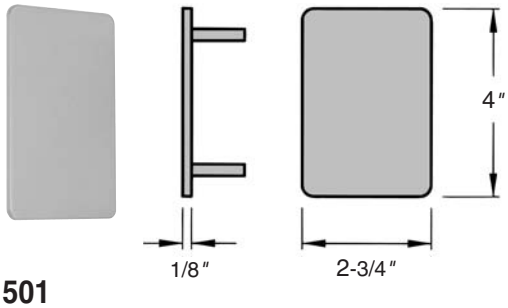

501
Cover Plate

602
Entrance by trim when touchbar is dogged down.

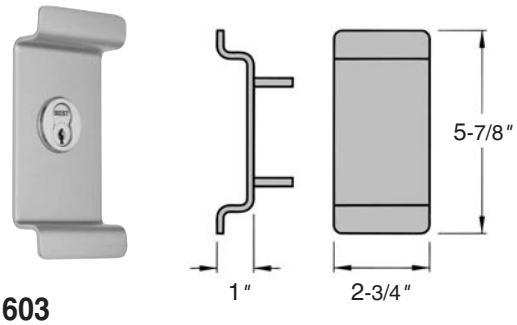

603
Entrance by trim when latchbolt is retracted by key. Key removable only when locked.

702A
Entrance by trim when touchbar is dogged down.

703A
Entrance by trim when latchbolt is retracted by key. Key removable only when locked.

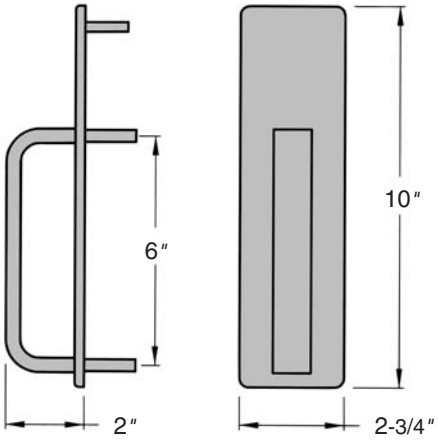

808A
Entrance by lever, key locks or unlocks lever.

814A
Entrance by lever. Always active – No cylinder

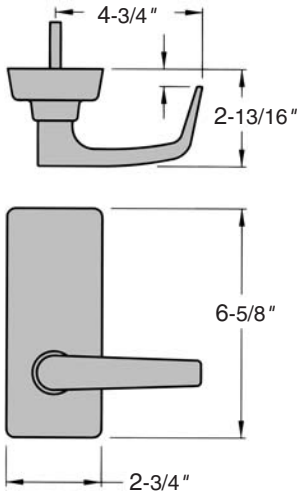

Notes:

CYLINDERS - Not furnished standard. For Cylinder details see page 11.
Rim Cylinder - Required for 603 & 703A Trim.
Mortise Cylinder - Required for 808A Trim. Use 1-1/4″ long standard mortise cylinder.
LEVER TRIMS - (808A, 814A) are handed, but are field reversible. Specify Handing when ordering.
TRIMS - are through bolted and will cover 161 cutouts.

The measurement from the Trim Horizontal Centerline to the Lever Horizontal Centerline is 1-7/16″.

SURFACE VERTICLE ROD EXIT DEVICES

S300

Reliant 5200 Series – *Reversible*
Reliant FL5200 Fire Exit Series – *Reversible*

DOORS - For all types of single and double door applications. Available for 1-3/4″ to 2-1/4″ thick, up to 4-0″ wide by 10'-0″ high openings. For thicker doors, consult factory. Furnished standard for 1-3/4″ thick, 3'-0″ wide by 7'-0″ high openings.

ACTIVE CASE & TRIM - Covers ANSI A115.2 (Type 161) or ANSI A115.18 cylinder lock preparation. Active case through bolts in ANSI A115.18 preparation without additional machining.

FUNCTIONS - Universal Exit Device, add Trim for the desired function.

ACTIVE CASE COVER, LATCH COVERS & ENDCAP - High Impact Thermoplastic.

ACTIVE CASE & TOUCHBAR SUB-ASSEMBLY - Zinc Dichromate plated Heavy Wrought Steel.

TOUCHBAR ASSEMBLY - Powder Coated Heavy Wrought Steel.

VERTICAL RODS - Powder Coated Steel.

TOUCHBAR HEIGHT - 40-5/16″ from floor standard. Specify required height if other than standard.

REVERSIBLE - Reversible for all functions and trims. Standard packaging RHRB.

UL LISTED - Panic and Fire Exit Hardware. For FIRE EXIT HARDWARE Ratings see page 3. Conforms to UL10C and UBC 7-2.

ANSI/BHMA - Devices are BHMA certified for ANSI 156.3, Grade 1.

FINISHES - 689 Aluminum Powder Coat, 695 Dark Bronze Powder Coat.

STILE WIDTH - See Stile information on page 11.

CYLINDERS - See page 11.

LESS BOTTOM ROD (LBR) OPTION - Specify suffix "LBR" (e.g. 5200LBR). See UL FIRE LABEL Rating Chart on page 11. Fire Rated Devices include FB277 Fire Bolt Assembly.

BOTTOM BOLT - Steel plated, independent action 5/8″ throw, with adjustment range to suit 3/4″ door undercut.

TOP STRIKE - No. S300, Investment Cast Stainless Steel, Black Powder Coated.

BOTTOM STRIKE - No. S460, Steel, Black Powder Coated, flush mounted.

DOGGING - 1/4 turn hex key dogging standard. Not available for Fire Exit Hardware.

TOP LATCHBOLT - Stainless Steel, Deadlocking, 3/4″ throw.

DEVICE OPTIONS

Suffix	Description	Page
ALK	Exit Alarm: battery operated	10
ALW	Exit Alarm: remote power	10
CD	Cylinder Dogging	9
FL	Fire Exit Hardware	3,6
LBR	Less Bottom Rod	6
LD	Less Dogging	9
TDS	Touchbar Monitoring Double Switch	10
TS	Touchbar Monitoring Switch	10
WALW	Weatherized Exit Alarm: remote	10
WTDS	Weatherized Touchbar Mon. Dbl Switch	10
WTS	Weatherized Touchbar Mon. Switch	10

S460

How To Order – 5200 Series

5208	ALK	808	RHRB	689	S300	
Device No.	**Device options**	**Trim No.**	**Handing**	**Finish**	**Strike**	**Door Size**
5201– exit only **5202**– dummy trim **5203**– key retracts latchbolt **5208**– key locks/ unlocks lever **5214**– no cylinder lever always active	**See above**	**501** – cover plate **602** – trim no key **603** – trim w/key **702A** – handle no key **703A** – handle w/key **808A** – lever w/key **814A** – lever no key	**RH** **LH** **RHRB** **LHRB**	**689** **690** **691** **693** **695** **696**	**S300** – rim/top (std.) **S301** – rim/top (opt.) **S458** – rim (opt.) **S459** – non fire (opt.) **S460** – bottom (std.) **S988** – roller (opt.)	3′0″x 7′0″x 1 3/4″

Device Only: Device no., hand, finish, strike, and door size including thickness:
(e.g. FL5208RALK x RHRB x 689 x S300 x 3-0 x 7-0 x 1-3/4)

Trim Only: Trim no., hand, finish, and door thickness:
(e.g. 808A RHRB 689 1-3/4) * 5203 & FL5203 Cylinder Only Application includes Cylinder Attachment Kit "CA-03".

Trims are certified to ANSI/BHMA A156.3, Grade 1.

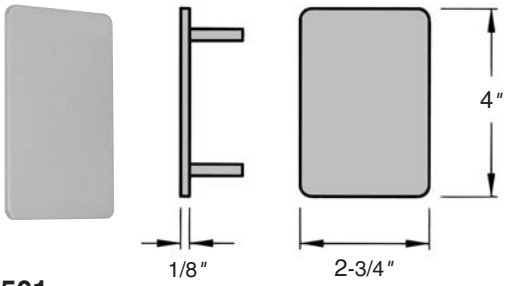

501
Cover Plate

602
Entrance by trim when touchbar is dogged down.

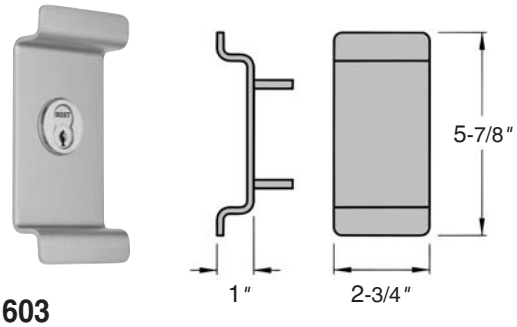

603
Entrance by trim when latchbolt is retracted by key. Key removable only when locked.

702A
Entrance by trim when touchbar is dogged down.

703A
Entrance by trim when latchbolt is retracted by key. Key removable only when locked.

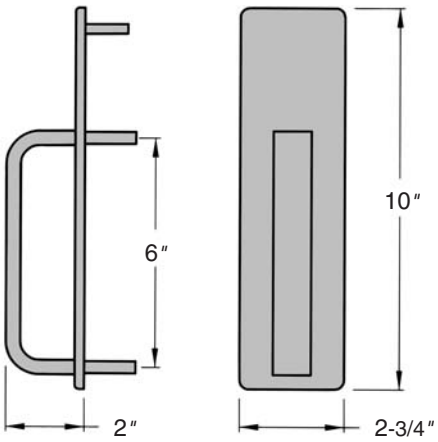

808A
Entrance by lever, key locks or unlocks lever.

814A
Entrance by lever. Always active – No cylinder

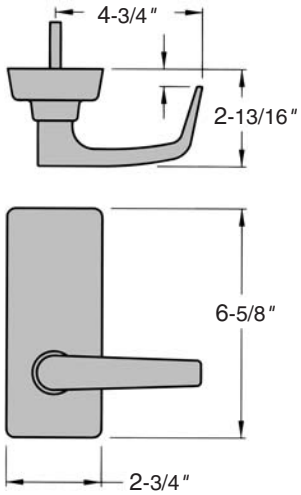

Notes:

CYLINDERS - Not furnished standard. For Cylinder details see page 11.
Rim Cylinder - Required for 603 & 703A Trim.
Mortise Cylinder - Required for 808A Trim. Use 1-1/4″ long standard mortise cylinder.
LEVER TRIMS - (808A, 814A) are handed, but are field reversible. Specify Handing when ordering.
TRIMS - are through bolted and will cover 161 cutouts.

MULLIONS

Mullion Cap
MC822

Mullion Base
MB822

Mullion Cap
MC811

Mullion Base
MB811

Key Removable Mullion Cap
KMC822
(Rim Cylinder required)

Mullion Cap Spacer
MCS822

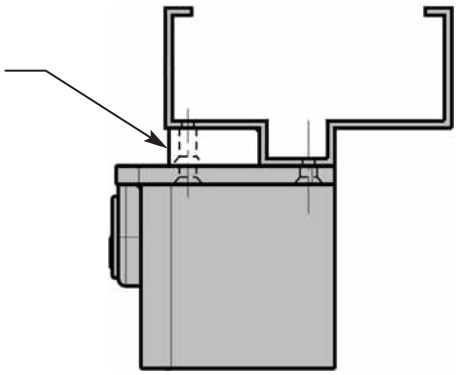

Interlock
S1447

Stabilizer
ST989

Removable Mullions

The Mullion is used to adapt a double door opening to two single door openings with Rim Exit Devices. When the full width of an opening is required, the mullion may be removed.

Key Removable Mullion (KR) – Provides a secure yet quick & easy means of removing the 822 or FL822 Mullion. The mullion can be reinstalled and locked without the need of the key.

Stock Size– For openings 8′-0″ high. For openings less than 8′-0″ high the mullion can be cut down. For openings greater than 8′-0″ high using the 822, KR822 or 811 mullions, consult factory.

Finishes – 600, 689, 695. For Finish description see page 3.

822, FL822, KR822, FLKR822 Mullion

U.L. Listed – FL822 and FLKR822 listed for Fire Exit Hardware. For FIRE LABEL RATING Chart see page 11.

Mullion – 2″ x 3″ Steel.

Mullion Base – Investment Cast Steel, 2″ wide 3-1/2″ deep. Furnished with steel anchors for concrete floors.

Interlock - Black Powder Coated Investment Cast Stainless Steel. Furnished standard for FL822 and FLKR822 Mullions. It interlocks the mullion to the Rim Active Case and S300 or S301 Strike.

Stabilizers – Black Powder Coated Steel. Stabilizers are furnished standard for FL822 and FLKR822 Mullions.

Mullion Cap Spacer – Minimum width 3-1/2″. For 2-1/4″ frame spacer specify part no. MCS822.

HC822, HCKR822 Mullion

822, FL822 Mullion Cap - MC822 Investment Cast Steel, 4 wide 3-5/8 deep.

KR822, FLKR822 KEY Removable Mullion Cap Assembly - Investment Cast Steel - can be ordered to convert existing 822 or FL822 mullions to Keyed Removable Mullions. Retrofits to the hole pattern of an MC822 Mullion Cap. To order specify KMC822 or KMC822F. For wire run information, please consult factory.

Cylinder – Not furnished standard - Rim Type required. See page 11 for cylinder details.

811 Mullion

MULLION – 2″ x 2″ Steel Mullion.

MULLION CAP – Cast 4-1/2″ wide x 2-5/16″, furnished with machine screws for metal frames.

MULLION BASE – Cast 2″ wide x 2-3/4″, furnished with sheet metal screws and plastic anchors.

To Order: Specify Mullion No. x Height x Finish (e.g. 822 x 8′-0″ x 600)

ACCESSORIES
Cylinder Dogging

Available for all Reliant Series Devices except for Fire Exit Hardware.

Cylinder Dogging provides the ability to lock down the touchbar with a key cylinder so the door can be used in the push pull mode. To order, specify suffix "CD" (e.g. 5100CD). Requires the use of a 1-1/4″ mortise cylinder, not furnished standard. Specify when required.

Less Dogging

Available for all Reliant Series Devices except Fire Exit

Cylinder Dogging Kit

To convert from hex key dogging to cylinder dogging in the field, a cylinder dogging kit is available. The kit consists of a channel filler, blocking ring, cylinder locator and lock nut. Requires the use of a 1-1/4″ mortise cylinder, not furnished standard. Specify when required.

To order specify: RCDK-3, for up to 3'-0″ and RCDK-4 for devices up to 4'-0″.

Strikes

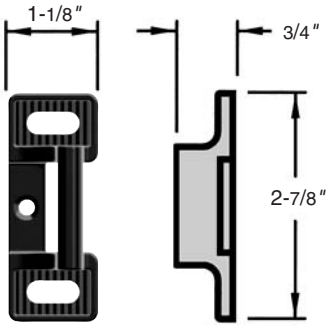

S300 Standard
For Rim and Top Strike for SVR Devices. Black Powder Coated Investment Cast Stainless Steel.

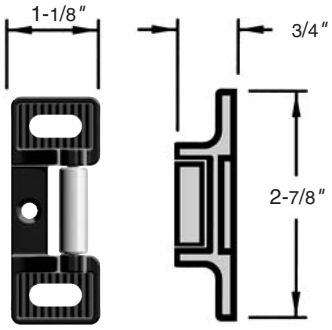

S301 Optional
For Rim and Top Strike for SVR Devices. Black Powder Coated Investment Cast, Stainless Steel Base and Roller.

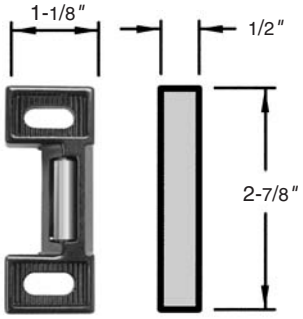

S458 Optional
For Rim Devices. Black Powder Coated Investment Cast, Stainless Steel Base and Roller.

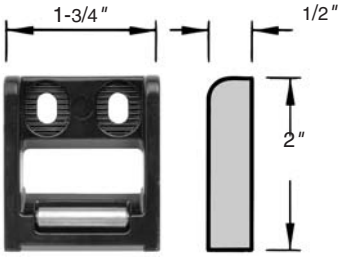

S988 Standard
For Narrow Stile Rim Devices. Black Powder Coated Investment Cast, Stainless Steel Base and Roller. Includes Rub Strip.

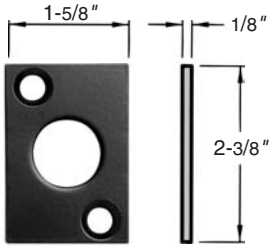

S460 Bottom Strike
For Vertical Rod Devices, Surface or Concealed. Black Powder Coated Steel.

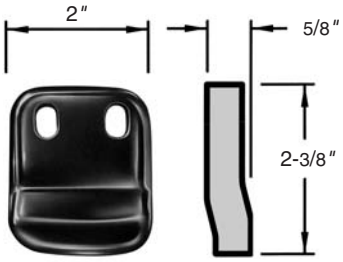

S459 Optional Rim Strike
For Non Fire Rated 100 & R100 Rim x Vertical Rod Device on a Pair of Doors without a Mullion. Black Powder Coated Investment Cast Stainless Steel.

Miscellaneous

End Cap
REC999 For Hinge Stile end of all Reliant Devices.

Mounting Bracket
MB305 For Hinge Stileend of all Reliant Devices.

Dogging Key
DK220 - 7/32″ standard hex.

Rod Guide
RRG123 For surface vertical rod devices.

Top Rod - 5200 Series.
Three stock lengths available for 7'-0″, 8'-0″, and 10'-0″ high doors.

RTR1860 - For 7'-0″ doors, rod is 37-3/8″ long.
RTR1861 - For 8'-0″ doors, rod is 49-3/8″ long.
RTR1863 - For 10'-0″ doors, rod is 73-3/8″ long.

For doors of lesser heights rods are cut on job. Specify finish 689 or 695. Includes Rod Pin.

Bottom Rod - 5200 Series.

RBR1864 - For Touchbar location at 40-5/16 from finished floor, bottom rod is 34-7/8 long. Specify finish 689 or 695. Includes Rod Pin.

EXIT ALARM

RALK - Battery Operated, provided with a 9 Volt battery and has an audible low battery indicator. Specify WH495 Wire harness for Remote Arm/Disarm or alternate input Activation options.

RALW - Remote Powered 12 to 24 VDC at 0.25 Amp., a (2) wire power transfer hinge is required (furnished by others). Specify WH495 Wire harness for Remote Arm/Disarm or alternate input Activation options.

The Exit Alarm provides a simple way to audibly monitor the use of an exit device. The unit contains a Piezo Alarm which will sound when the touchbar is depressed. Alarm sounds at 80db at 10 feet. It is also equipped with an LED indicator. The LED flashes GREEN for 20 seconds when the unit is arming and flashes RED every 20 seconds when the unit is armed.
Note: Touchbar Monitoring Switch (TS) is recommended when using Alarm option with 5200 Series Surface Vertical Rod devices.

Cylinder
The ALK and ALW requires a standard 1-1/4″ Mortise Cylinder which is used as a key switch to perform the following functions:

- To turn on (Arm) - it will allow 20 seconds to exit before alarm sounds.
- Silence and reset the alarm after unauthorized egress.
- To turn off (Disarm) the alarm for continuous unmonitored egress.
- Engage mechanical Dogging for Non-Fire Rated Devices.

Available for all Reliant Devices from 3'-0″ to 4'-0″ wide doors. Furnished with Touchbar decal which states:

!!EMERGENCY EXIT ONLY!!
PUSH TO OPEN ALARM WILL SOUND

Wiring Harness - WH495
Can be wired for one or both of the options listed below.

- Exit Alarm can be turned on (Armed) with alternate inputs. For other than our Door Position Switch a (2) wire power transfer hinge is required (furnished by others).
- Exit alarm can be turned on (Armed) or off (Disarmed) from a remote location. A Mortise Cylinder or Dummy Cylinder is required. A (2) wire power transfer hinge is required (furnished by others).

To Order: specify WH495.
To Order: Device with Alarm - add suffix "ALK", "ALW" (e.g. 5100ALK)

Exit Alarm Kits

The Exit Alarm is available in kits for retrofit on existing devices. Specify finish when ordering, see page 3.

3'-0″ RALK-3, RALW-3
4'-0″ RALK-4, RALW-4

- WH495 Wiring Harness - Required for Remote Arming/ Disarming the Alarm.
- Reliant Series, kits are available in 689 or 695 Finishes.
- To order specify Kit No. and Finish (e.g. ALK-3 689).

* For Battery operated kits a 9 Volt Battery is included.

Weatherized Exit Alarm

Available for all Reliant Series Devices. The Weatherized Exit Alarm is identical in operation to the standard Exit Alarm but incorporates a weatherized design for use on a variety of applications where contact with the elements may occur.

WALW - Remote Powered 12 to 24 VDC at 0.25 Amp., a (2) wire power transfer is required, not furnished standard. Specify WH495 Wire Harness for Remote Arm/Disarm or alternate Input Activation options.
Weather resistant loss prevention hardware designed for use in outdoor or wet environments

- Meets the requirements of MIL-STD 810F, Method 506.4, Driving Rain Test (simulating 4 in./hr. rain with 40 mph wind)
- Meets the requirements of MIL-STD 810F, Method 509.4, Salt Fog test (simulating effects of corrosive environments similar to atmospheric conditions found in costal regions)

To Order: Device with Weatherized Exit Alarm - add suffix "WALW" to Device No. (e.g. 5208WALW)

Touchbar Monitoring

Available for all Reliant Series Devices. The Touchbar Monitoring Switch is an internally mounted switch that is used to signal electromagnetic locks, horns, monitoring stations or other electronic components.

- UL Listed for Panic and Fire for Class II Circuitry.
- TS and TDS can be used in combination with all options.

TS (SPDT - Single Pole, Double Throw) version allows for interface with one external component. A (2) wire power transfer is required, not furnished standard.

TDS (DPDT - Double Pole, Double Throw) version allows for interface with two external components. A (4) wire power transfer is required, not furnished standard.

To Order: specify prefix TS or TDS (e.g. TS5108)

Electrical Ratings:
TS: Switch rated to 2 Amps at 24VDC SPDT
TDS: Switch rated to 2 Amps at 24VDC DPDT

Weatherized Touchbar Monitoring

Available for all Relaint Series Devices. Weatherized Touchbar Switch WTS/WTDS is designed for use on a variety of exit device applications where contact with the elements may occur. Provided with identical functions as the standard Touchbar monitoring.

- Meets the requirements of MIL-STD 810F, Method 506.4, Driving Rain Test (simulating 4 in./hr. rain with 40 mph wind)
- Meets the requirements of MIL-STD 810F, Method 509.4, Salt Fog test (simulating effects of corrosive environments similar to atmospheric conditions found in costal regions)

To Order: specify prefix WTS or WTDS (e.g. WTS5108)

Single Doors – Rim Devices

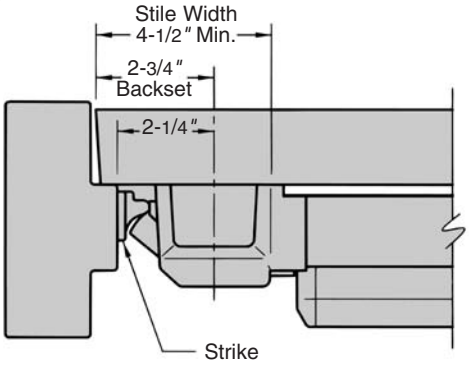

Rim Device with S300 or S301 Strike

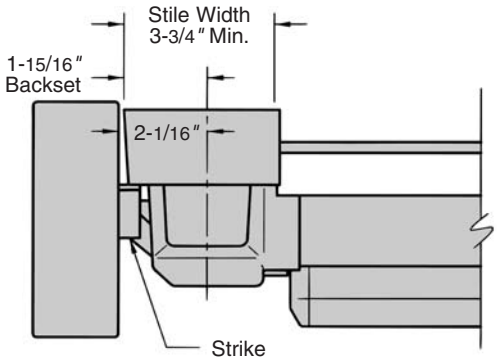

Rim Device with S988 Strike
For 3-3/4″ Stile Aluminum doors and frames. Consult factory.

Pair of Doors, Rim Devices

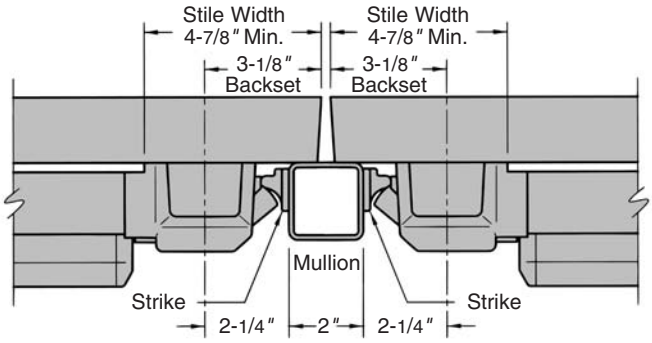

Rim Devices with S300 or S301 Strike and Mullion

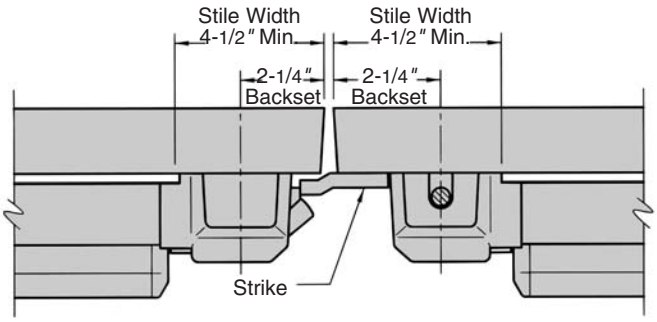

Rim Device and Surface Vertical Rod Device with S459 Strike

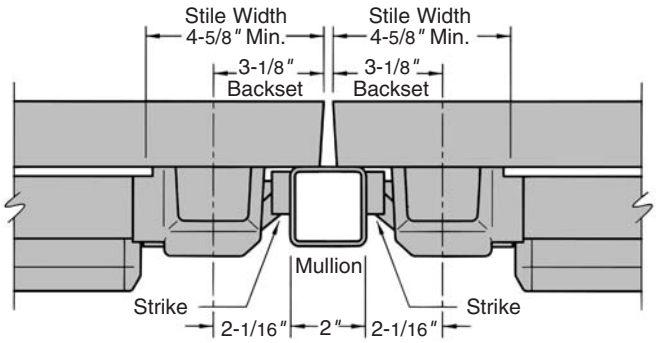

Rim Devices with S300 or S301 Strike and Mullion

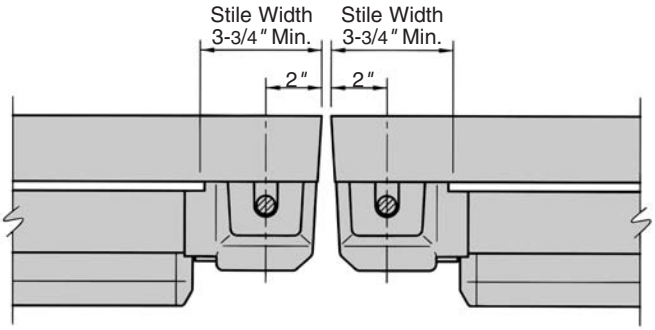

Rim Device and Surface Vertical Rod Device with S459 Strike

Cylinders

Cylinders are not furnished standard with the device or trim. BEST Keyway, 7 pin standard. Available in 612 and 626 Finish. Specify Type and Finish when ordering. (e.g. 1E74 x 626)

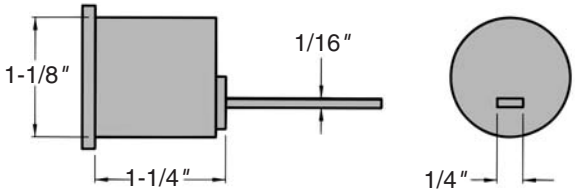

Rim Cylinder - 1E74
Required for:
- Rim Exit Device Outside Trims
- Vertical Rod Exit Device Outside Trims
- Key Removable Mullion

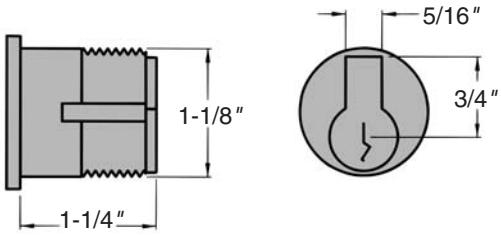

Mortise Cylinder - 3E74
Required for:
- Mortise Exit Device Outside Trims

PRECISION HARDWARE

For more information on Stanley Security Solutions' products, services, and office locations visit our web site at www.stanleysecuritysolutions.com

Product information contained in this catalog has been compiled and presented with as much care and completeness as is reasonably possible. Errors or mistakes may be present, and in many cases, reliance has been placed on information supplied by other manufacturers which may be in error or which may be subject to changes or modifications by the manufacturer without notice and without obligation. Therefore, no guarantee can be made or should be assumed or implied with regards to product information contained in this catalog.

STANLEY®

Security Solutions

Stanley Security Solutions, Inc.
6161 E. 75th Street Indianapolis, Indiana 46250
www.stanleysecuritysolutions.com
© 2007 Stanley Security Solutions, Inc. and Stanley Logistics

7.5M R807FP
PHI006