STANLEY®
Security Solutions

PRECISION HARDWARE

EXIT DEVICES

APEX 2000 SERIES

STANLEY
phi™

TABLE OF CONTENTS

WIDE STILE EXIT DEVICES & TRIMS — Page
- Rim Devices 4, 5
- Surface Vertical Rod Devices 6, 7
- Mortise Devices 8, 9
- Wood Door Concealed Vertical Rod Devices 14, 15
- Concealed Vertical Rod Devices 16, 17

NARROW STILE EXIT DEVICES & TRIMS
- Rim Devices 10, 11
- Concealed Vertical Rod Devices 12, 13

MULLIONS
- Removable Mullion 18
- Fire Labeled Removable Mullion 18
- Key Removable Mullion 18

EXIT DEVICE OPTIONS
- **ALK** Exit Alarm (Battery Operated) 27
- **ALW** Exit Alarm (Remote Power) 27
- **BRL** Braille Touchbar 31
- **CD** Cylinder Dogging 19
- **DE** Delayed Egress 24, 25
- **DS** Door Position Switch 29
- **E** Electric Rim & Mortise Devices 28
- **ELR** Electric Latch Retraction 21, 22, 23
- **HC** Windstorm and Hurricane Code Devices 20
- **LD** Less Dogging 19
- **LS** Latchbolt Monitoring 29
- **LDS** Latchbolt Monitoring Double Switch 29
- **TS** Touchbar Monitoring 29
- **TDS** Touchbar Monitoring Double Switch 29
- **WALW** Weatherized Exit Alarm (Remote Power) 27
- **WTS** Weatherized Touchbar Monitoring 29
- **WTDS** Weatherized Touchbar Mon. Do0uble Switch 29
- Double Cylinder 9
- Electric Mortise Lock 28

ACCESSORIES — Page
- **ALK** Exit Alarm Kit 27
- **CDK** Cylinder Dogging Kit 19
- **E** Electric Lock/Unlock Kit 28
- **ELR** Conversion Kit 21
- **ELR150** Power Supply and Modules 21,22
- **LSK** Latchbolt Monitoring Conversion Kit 29
- **PS160** Power Supply 25
- **TSK** Touchbar Monitoring Conversion Kit 29
- Cylinders 19
- Double Cylinders Conversion Kit 19
- Dummy Touchbar 31
- Miscellaneous Components 31
- Power Transfers 31
- Security Screws 31
- Sex Nuts & Bolts 3
- Shim Kit 31
- Strikes 30

ADDITION INFORMATION
- Base Material and Finishes 3
- DE Application Charts 26
- Device Dimensions 33
- Device Minimum Stile Width 32, 33
- ELR application Charts 23
- Fasteners 3
- Fire Label Rating Chart 35
- Touchbar Clearance 2
- Trim Dimensions 34

Introduction

The Apex 2000 Series Touchbar Style Exit Device is highly regarded by architects and end-users alike. Many of the nation's largest healthcare and educational facilities prefer the Apex for it's aesthetic design and efficient engineering. All Apex 2000 Series Exit Devices are UL listed for panic and fire hardware and are certified to ANSI A156.3 Grade 1. Several models are also certified for hurricane resistant applications.

A complete offering of mechanical and electrical options provide a wide range of exit device security solutions. However, the traditional core strenghts of the product can't be overstated. Simple operation with few moving parts, manufactured with true ANSI/BHMA architectural finishes. The chassis is constructed from investment cast steel and the universal mounting holes provide an easier retrofit installation.

Quiet Operation

Sound Dampeners reduce the noise associated with Exit Device operation on the depression and return stroke of the Touchpad.

Touchbar Clearance

The Apex Wide Stile Series Exit Devices accommodate doors with vision lites or glass windows where the vision lite frames or moldings project up to 1/4 beyond the face of the door. The Active Case and End Cap Mounting Bracket are mounted on the face of the door without shims or without cutting the glass molding. These devices have a 1/4 gap between the face of the door and the Touchbar Assembly. This gap allows proper functioning of the devices even on doors which are not perfectly flat. Since the Active Case is mounted directly on the face of the door, it accommodates standard lengths of through bolting screws, thumbpieces, knob & lever Trim fingers, and cylinder tail pieces.

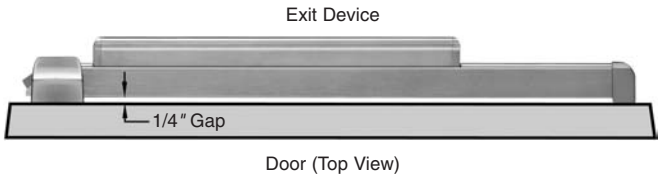

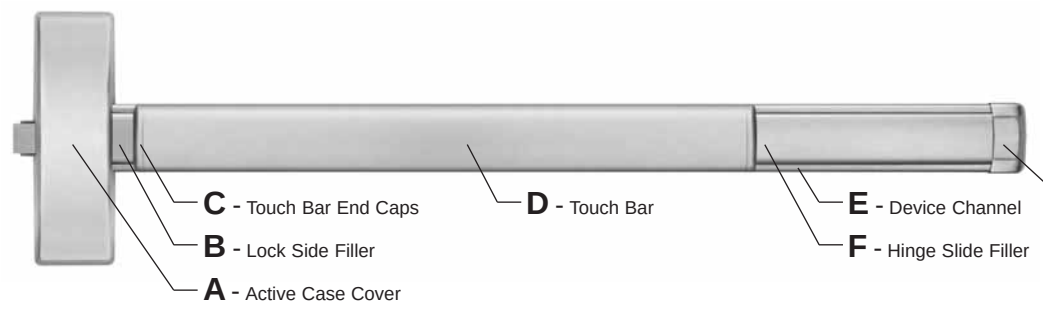

Base Materials

Finishes	ANSI/BHMA	US	Aluminum	Brass	Bronze	Stainless Steel
Polished Brass, Clear Coated	605	US3	—	**A,B,C,D,E,F,G,H**	—	—
Satin Brass, Clear Coated	606	US4	—	**A,B,C,D,E,F,G,H**	—	—
Satin Bronze, Clear Coated	612	US10	—	—	**A,B,C,D,E,F,G,H**	—
Dark Oxidized Satin Bronze	613	US10B	—	—	**A,B,C,D,E,F,G,H**	—
Polished Chromium Plated	625	US26	—	**C**	**A,B,D,E,F,G**	**H**
Satin Chromium Plated	626	US26D	—	**C**	**A,B,D,E,F,G**	**H**
Satin Aluminum, Clear Anodized	628	US28	**A,E,F**	—	—	**B,C,D,G,H**
Satin Stainless Steel	630	US32D	—	—	—	**A,B,C,D,E,F,G,H**

Finishes

ANSI/BHMA	US	Description
605	US3	Polished Brass, Clear Coated
606	US4	Satin Brass, Clear Coated
612	US10	Satin Bronze, Clear Coated
613	US10B	Dark Oxidized Satin Bronze
625	US26	Polished Chromium Plated
626	US26D	Satin Chromium Plated
628	US28	Satin Aluminum, Clear Anodized
630	US32D	Satin Stainless Steel
Mullion finishes		
600	USP	Primed for Paint
689		Aluminum Paint
695		Dark Bronze Paint

Fasteners

Furnished standard with machine screws and full thread wood/sheet metal screws. Specify Sex Nuts and Bolts (SNB) where recommended or required by the door manufacturer.

Sex Nuts & Bolts (not furnished std.)

Sex Nuts & Bolts are furnished with No. 10-24 x 1″ OHMS (1-1/2″ long screws required for guides).

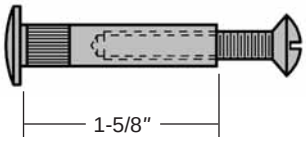

Security Screws

All exposed screws will be a Torx pin in tamper resistant type, machine screws only. Specify (SEC) Security Screws. Cover Screws use a T20 driver, End Cap Screws use a T25 driver.

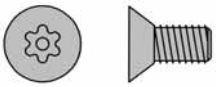

Door Sizes

Stock sizes for door widths and heights are listed below. If required, cut to size in the field.

Door Widths	Stock Sizes
2′-0″ to 2′-6″	2′-6″ *
2′-7″ to 3′-0″	3′-0″
3′-1″ to 4′-0″	4′-0″

* Not available for Narrow Stile Devices.

Vertical Rod Devices

Device	Door Heights	Stock Sizes
Surface Vertical Rod Device*	up to 7′-0″	7′-0″
	7′-1″ to 8′-0″	8′-0″
	8′-1″ to 10′-0″	10′-0″
Concealed Vertical Rod Device	6′-8″ to 8′-0″	8′-0″
	8′-1″ to 10′-0″	10′-0″

* Surface Vertical Rods are furnished of the same material as the device. Stainless steel rods are furnished for 625, 626, 628 and 630 devices.

Hand of Doors

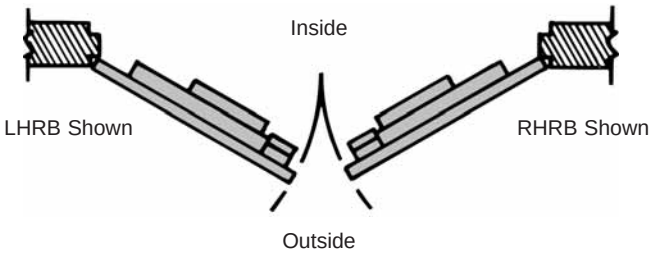

RIM EXIT DEVICES

Apex 2100 Series – *Reversible*
Apex FL2100 Fire Exit Series – *Reversible*

DOORS - For all types of single and double doors with a mullion. For mullions, see page 18. Available for 1-3/4″ to 2-1/4″ thick, up to 4′-0″ wide opening. For thicker doors, consult factory. Furnished standard for 1-3/4″ thick, 3′-0″ wide opening.

DEVICE - Covers ANSI A115.2 (Type 161), A115.18 cylinder lock and A115.1 (Type 86) Mortise Lock preparation.

FUNCTIONS - Functions are field selectable except for the Double Cylinder option. The device is furnished for a desired function if specified. If not specified the “03” function is furnished standard.

DOUBLE CYLINDER - Handed, “10” Function available. Requires two rim type cylinders, not furnished standard. See page 5 and 19.

BASE MATERIAL - The Cover, Touchbar, Device Channel, Lock/Hinge Side Filler and End Cap are furnished of heavy wrought Brass, Bronze or Stainless Steel. 628 Devices are furnished with Aluminum, Brass, Bronze and Stainless Steel components. See “Finish & Base Material” chart on page 3.

CHASSIS - Investment Cast Steel, Zinc Dichromated.

LATCHBOLT - Stainless Steel, Deadlocking, 3/4″ throw.

STRIKES - No. S300, Investment Cast Stainless Steel, Black Powder Coated furnished standard. No. S988, optional strike for use on Aluminum Door applications, please specify when ordering. No. S458, optional strike for use on Mullion applications, please specify when ordering. For optional strike information see page 30.

DOGGING - 1/4″ turn hex key dogging standard. NOT available on Fire Exit Hardware.

TOUCHBAR HEIGHT - 39-15/16″ from floor standard. May be varied as situation dictates.

REVERSIBLE - Reversible for all functions and Trims. Standard packaging RHRB.

UL LISTED - Panic and Fire Exit Hardware. For FIRE EXIT HARDWARE Ratings see page 35. Conforms to UL10C and UBC 7-2.

ANSI/BHMA - Devices are BHMA certified for ANSI 156.3, Grade 1.

FINISHES - 605, 606, 612, 613, 625, 628, 630. For Finish description see page 3.

CYLINDERS - Rim Type, not furnished standard. Specify when required. For cylinder details see page 19.

STILE WIDTH - See Stile Information on page 32.

RETROFIT APPLICATIONS - The 2100 and FL2100 Series Devices are designed to retrofit into other manufacturers’ mounting hole locations. 1700 Series Pull Trim and 4900 Series Lever Trim may also be factory set for these applications by specifying prefix “R” (e.g. 2108 R4908A). Consult factory for details.

Apex 21 Series — *Nonhanded*

The 21 Series Device is designed to be compatible with many manufacturers’ Access Control exterior trim. The device incorporates a center driven cam to receive the tail-piece of the access control product. The tailpiece rotation required to retract the latch is a minimum of 50 degrees. **Consult factory for details.**

DEVICE OPTIONS		Page
DE	Delayed Egress	24
E	Electric Device	28
ELR	Electric Latch Retraction	21
FL	Fire Exit Hardware	4
HC	Windstorm and Hurricane Code Device	20
LDS	Latchbolt Monitoring Double Switch	29
LS	Latchbolt Monitoring Switch	29
TDS	Touchbar Monitoring Double Switch	29
TS	Touchbar Monitoring Switch	29
WTDS	Weatherized Touchbar Mon. Dbl. Switch	29
WTS	Weatherized Touchbar Monitoring Switch	29

To specify add Prefix to Device No. (e.g. TS2103)

Suffix	Description	Page
ALK	Exit Alarm: battery operated	27
ALW	Exit Alarm: remote power	27
BRL	Braille Touchbar	31
CD	Cylinder Dogging	19
DS	Door Position Monitoring Switch	29
LD	Less Dogging	19
SEC	Security Screws	3
SNB	Sex Nut and Bolt	3
WALW	Weatherized Exit Alarm: remote power	27

To specify add Suffix to Device No. (e.g. 2103CD)

1700A "A" Grip

1700B "B" Grip

1700C "C" Grip

2000C "C" Grip

1. All Trims are furnished with wrought plates and extruded or cast solid grips.
2. Specify Grip Design (A,B,C) ("A" Grip furnished standard for 1700 Series Trim, "C" Grip furnished standard for 2000 Series Trim)
3. 630 Trim is furnished for 628 Devices.

Retrofit Applications

The R1700 Series Trim is designed to retrofit into other manufacturers' installations when used with the wide stile Apex Series Devices. **Consult factory for details.**

4900A "A" Lever

4900B "B" Lever

4900C "C" Lever

4900D "D" Lever

4900K "K" Knob

1. All the escutcheons and levers are castings or forgings.
2. Specify Lever or Knob Design (A,B,C,D,K) and Handing ("A" Lever x RHRB furnished standard)
3. 626 Trim furnished for 628 and 630 Devices.

V4908A

Vandal Resistant Trim

A heavy duty lever trim designed to with stand abuse and vandalism. Composed of extra strength shock-absorbing "overload" springs and heavy duty investment cast stainless steel internal components. Lever returns to the "home" position eliminating the need to reset the lever.

Retrofit Applications

The R4900 Series Trim is designed to retrofit into other manufacturers' installations when used with the wide stile Apex Series **Devices.Consult factory for details.**

- For Trim dimensions see page 34.
- Trims are BHMA certified for ANSI 156.3, Grade 1.
- Trims are through bolted and will cover 161 and 86 cutouts (except for 2000C Trim).
- Cylinder, Rim Type, not furnished standard. For cylinder details see page 19.

ANSI Function	**01** Exit Only (cover plate)	**02** Dummy Trim	**03** Key Retracts Latchbolt	**05** Key Locks/Unlocks Thumbpiece	**08** Key Locks/Unlocks Lever/Knob	**10*** Double Cylinder Inside Key Locks/Unlocks Lever/Knob	**14** No Cylinder Lever/Knob Always Active	**15** No Cylinder Thumbpiece Always Active
Device Nos.	2101 FL2101	2102	2103** FL2103**	2105 FL2105	2108 FL2108	2110 FL2110	2114 FL2114	2115 FL2115
Trim Nos.	1701 **R**1701 2101 4901 R4901	1702A R1702A 2102C 4902A R4902A	1703A R1703A 2103C 4903A R4903A	1705A R1705A 2105C	4908A V4908A R4908A RV4908A	4908A V4908A R4908A RV4908A	4914A R4914A	1715A **R**1715A 2015C

Device with Trim:

Device No.

Add **Prefix** for options, see page 4.

Add **Suffix**: for options, see page 4.

Add **Prefix**: "V" Vandal Resistant Lever Trim
"R" Retrofit Trim

Add **Suffix**: Lever or Knob Design (A,B,C,D, K)
Grip Design (A,B,C)

Add **Suffix**: "KNR" Knurled Lever or Grip

TS2108CD x V4908AKNR x RHRB x 630 x S300 x 3'-0" x 7'-0" x 1-3/4"

Device w/options | Trim No. | Hand | Finish | Strike | Door Size

Device Only: Device no., hand, finish, strike, and door size including thickness:
(e.g. TS2108CD x RHRB x 630 x S300 x 3'-0" x7'-0" x 1-3/4")

Trim Only: Trim no., hand, finish, strike, and door size including thickness: (e.g. V4908A x RHRB x 626 x 1-3/4")

* "10" Function is handed

** 2103 & FL2103 x Cylinder Only Application includes Cylinder Attachment Kit "CA-03"

SURFACE VERTICLE ROD EXIT DEVICES

S300

Apex 2200 Series – *Reversible*
Apex FL2200 Fire Exit Series – *Reversible*

DOORS - For all types of single and double door applications. Available for 1-3/4″ to 2-1/4″ thick, up to 4'-0″ wide by 10'-0″ high openings. For thicker doors, consult factory. Furnished standard for 1-3/4″ thick, 3'-0″ wide by 7'-0″ high openings.

DEVICE - Covers ANSI A115.2 (Type 161), A115.18 cylinder lock and A115.1 (Type 86) Mortise Lock preparation.

FUNCTIONS - Functions are field selectable. The device is furnished for a desired function if specified. If not specified the "03" function is furnished standard.

BASE MATERIAL - The Covers, Touchbar, Device Channel, Lock/Hinge Side Filler, Vertical Rods and End Cap are furnished of heavy wrought Brass, Bronze or Stainless Steel. US28 Devices are furnished with Aluminum, Brass, Bronze and Stainless Steel components. See "Finish & Base Material" chart on page 3.

CHASSIS - Investment Cast Steel, Zinc Dichromated.

TOP LATCHBOLT - Stainless Steel, Deadlocking, 3/4″ throw.

REVERSIBLE - Reversible for all functions and trims. Standard packing RHRB.

UL LISTED - Panic and Fire Exit Hardware. For FIRE EXIT HARDWARE Ratings see page 35. Conforms to UL10C and UBC 7-2.

ANSI/BHMA - Devices are BHMA certified for ANSI 156.3, Grade 1.

FINISHES - 605, 606, 612, 613, 625, 628, 630. For finish description see page 3.

CYLINDERS - Rim type, not furnished standard. Specify when required. For cylinder details see page 19.

STILE WIDTH - See Stile Information on page 32.

LESS BOTTOM ROD (LBR) OPTION - Specify suffix "LBR" (e.g. 2208LBR). See UL FIRE LABEL RATING chart on page 35. Fire Rated Devices include FB277 Fire Bolt Assembly.

RETROFIT APPLICATIONS - The 2200 and FL2200 Series Devices are designed to retrofit into other manu facturers' mounting hole locations. 1700 Series Pull Trim and 4900 Series Lever Trim may also be factory set for these applications by specifying prefix "R" (e.g. 2208 R4908A).

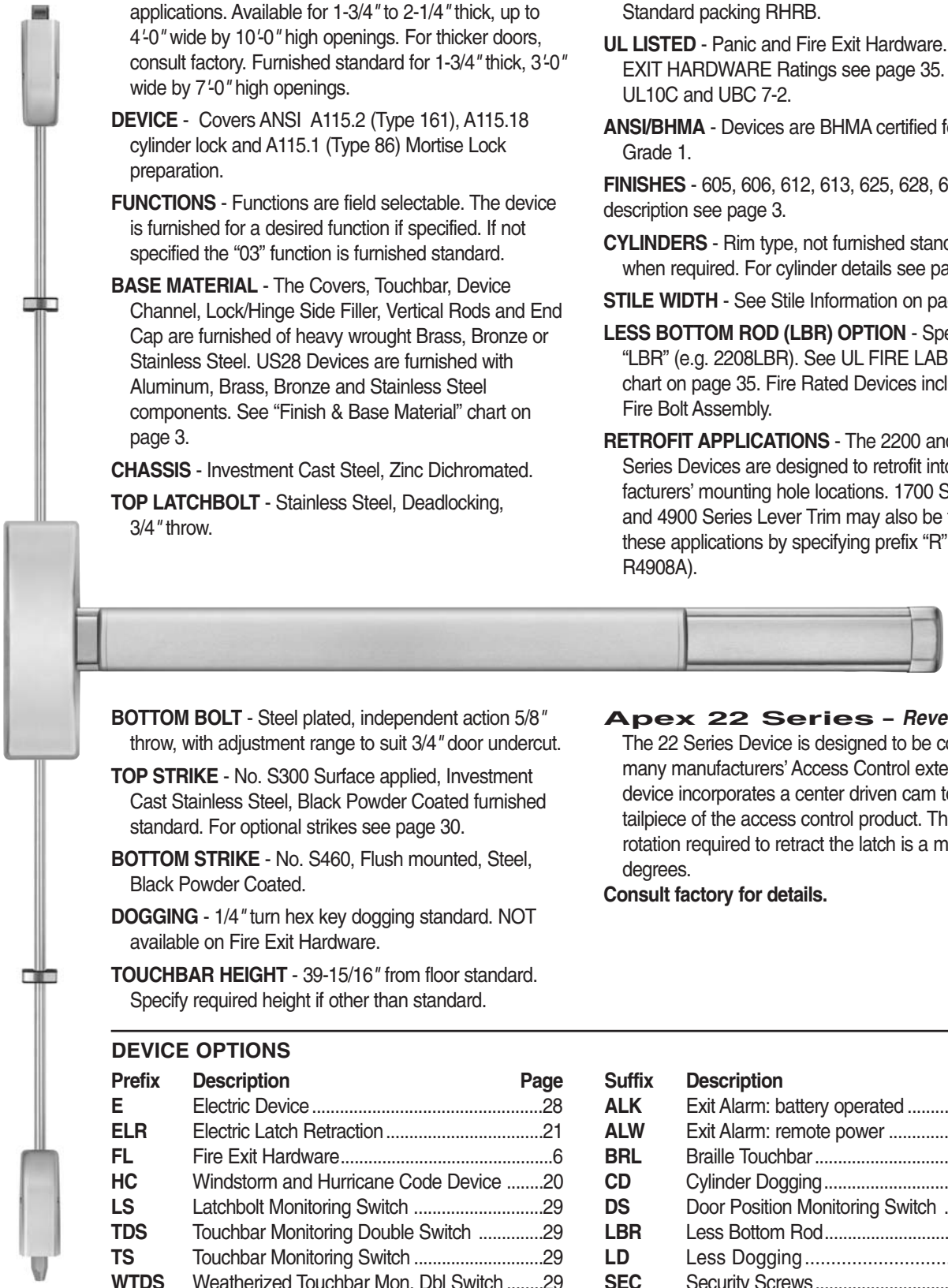

BOTTOM BOLT - Steel plated, independent action 5/8″ throw, with adjustment range to suit 3/4″ door undercut.

TOP STRIKE - No. S300 Surface applied, Investment Cast Stainless Steel, Black Powder Coated furnished standard. For optional strikes see page 30.

BOTTOM STRIKE - No. S460, Flush mounted, Steel, Black Powder Coated.

DOGGING - 1/4″ turn hex key dogging standard. NOT available on Fire Exit Hardware.

TOUCHBAR HEIGHT - 39-15/16″ from floor standard. Specify required height if other than standard.

Apex 22 Series – *Reversible*

The 22 Series Device is designed to be compatible with many manufacturers' Access Control exterior trim. The device incorporates a center driven cam to receive the tailpiece of the access control product. The tailpiece rotation required to retract the latch is a minimum of 50 degrees.

Consult factory for details.

S460

DEVICE OPTIONS

Prefix	Description	Page
E	Electric Device	28
ELR	Electric Latch Retraction	21
FL	Fire Exit Hardware	6
HC	Windstorm and Hurricane Code Device	20
LS	Latchbolt Monitoring Switch	29
TDS	Touchbar Monitoring Double Switch	29
TS	Touchbar Monitoring Switch	29
WTDS	Weatherized Touchbar Mon. Dbl Switch	29
WTS	Weatherized Touchbar Mon. Switch	29

To specify add Prefix to Device No. (e.g. TS2203)

Suffix	Description	Page
ALK	Exit Alarm: battery operated	27
ALW	Exit Alarm: remote power	27
BRL	Braille Touchbar	31
CD	Cylinder Dogging	19
DS	Door Position Monitoring Switch	29
LBR	Less Bottom Rod	6
LD	Less Dogging	19
SEC	Security Screws	3
SNB	Sex Nut and Bolt	3
TMB	Transom Bracket	31
WALW	Weatherized Exit Alarm: remote power	27

To specify add Prefix to Device No. (e.g. TS2203)

1700A
"**A**" Grip

1700B
"**B**" Grip

1700C
"**C**" Grip

2000C
"**C**" Grip

1. All Trims are furnished with wrought plates and extruded or cast solid grips.
2. Specify Grip Design (A,B,C) ("A" Grip furnished standard for 1700 Series Trim, "C" Grip furnished standard for 2000 Series Trim)
3. 630 Trim is furnished for 628 Devices.

Retrofit Applications
The R1700 Series Trim is designed to retrofit into other manufacturers' installations when used with the wide stile Apex Series Devices. **Consult factory for details.**

4900A
"**A**" Lever

4900B
"**B**" Lever

4900C
"**C**" Lever

4900D
"**D**" Lever

4900K
"**K**" Knob

1. All the escutcheons and levers are castings or forgings.
2. Specify Lever or Knob Design (A,B,C,D,K) and Handing ("A" Lever x RHRB furnished standard)
3. 626 Trim furnished for 628 and 630 Devices.

V4908A
Vandal Resistant Trim
A heavy duty lever trim designed to with stand abuse and vandalism. Composed of extra strength shock-absorbing "overload" springs and heavy duty investment cast stainless steel internal components. Lever returns to the "home" position eliminating the need to reset the lever.

Retrofit Applications
The R4900 Series Trim is designed to retrofit into other manufacturers' installations when used with the wide stile Apex Series **Devices.Consult factory for details.**

- For Trim dimensions see page 34.
- Trims are BHMA certified for ANSI 156.3, Grade 1.
- Trims are through bolted and will cover 161 and 86 cutouts (except for 2000C Trim).
- Cylinder, Rim Type, not furnished standard. For cylinder details see page 19.

ANSI Function	**01** Exit Only (cover plate)	**02** Dummy Trim	**03** Key Retracts Latchbolt	**05** Key Locks/Unlocks Thumbpiece	**08** Key Locks/Unlocks Lever/Knob	**14** No Cylinder Lever/Knob Always Active	**15** No Cylinder Thumbpiece Always Active
Device Nos.	2201 FL2201	2202	2203** FL2203**	2205 FL2205	2208 FL2208	2214 FL2214	2215 FL2215
Trim Nos.	1701 **R**1701 2101 4901 R4901	1702A R1702A 2102C 4902A R4902A	1703A R1703A 2103C 4903A R4903A	1705A R1705A 2105C	4908A V4908A R4908A RV4908A	4914A R4914A	1715A **R**1715A 2015C

Device with Trim:

Device No.

Add **Prefix** for options, see page 6.

Add **Suffix**: for options, see page 6.

Add **Prefix**: "V" Vandal Resistant Lever Trim
"R" Retrofit Trim

Add **Suffix**: Lever or Knob Design (A,B,C,D,K)
Grip Design (A,B,C)

Add **Suffix**: "KNR" Knurled Lever or Grip

TS2208CD x V4908AKNR x RHRB x 630 x 3'-0" x 7'-0" x 1-3/4"

Device w/options | Trim No. | Hand | Finish | Door Size

Device Only: Device no., hand, finish, strike, and door size including thickness:
(e.g. TS2208CD x RHRB x 630 x 3'-0" x7'-0" x 1-3/4")

Trim Only: Trim no., hand, finish, strike, and door size including thickness: (e.g. V4908A x RHRB x 626 x 1-3/4")

* 2203 & FL2203 x Cylinder Only Application includes Cylinder Attachment Kit "CA-03"

MORTISE EXIT DEVICES

S982

Apex 2300 Series – *Handed*
Apex FL2300 Fire Exit Series – *Handed*

DOORS - For all types of single and double door applications. Available for 1-3/4″ to 2-1/4″ thick, up to 4-0″ wide opening. For thicker door, consult factory. Furnished standard for 1-3/4″ thick, 3′-0″ wide opening.

DEVICE - Covers ANSI A115.1 (Type 86) Mortise Lock preparation.

DOUBLE CYLINDER - Handed, "10" Function available. Requires one rim type cylinder and one 1-1/4″ long mortise type cylinder, not furnished standard. See page 9 and 19.

BASE MATERIAL - The Cover, Touchbar, Device Channel, Lock/Hinge Side Filler and End Cap are furnished of heavy wrought Brass, Bronze or Stainless Steel. US28 Devices are furnished with Aluminum, Brass, Bronze and Stainless Steel components. See "Finish & Base Material" chart on page 3.

CHASSIS - Investment Cast Steel, Zinc Dichromated.

DOGGING - 1/4″ turn hex key dogging standard. NOT available on Fire Exit Hardware.

TOUCHBAR HEIGHT - 39-15/16″ from floor standard.

HANDED - Specify hand when ordering as RHRB or LHRB. Touchbar Assembly, Mortise Lock and Trim may be reversed in the field. For reversibility of complete device, mortise strike is required for the other hand.

UL LISTED - Panic and Fire Exit Hardware. For FIRE EXIT HARDWARE Ratings see page 35. Conforms to UL10C and UBC 7-2.

ANSI/BHMA - Devices are BHMA certified for ANSI 156.3, Grade 1.

FINISHES - 605, 606, 612, 613, 625, 628, 630. For finish description see page 3.

STILE WIDTH - See Stile Information on page 32.

CYLINDERS - Mortise type, not furnished standard. For cylinder details see page 19.

RETROFIT APPLICATIONS - The 2300 and FL2300 Series Devices are designed to retrofit into other manufacturers' mounting hole locations. 1700 Series Pull Trim and 4900 Series Lever Trim may also be factory set for these applications by specifying prefix "R" (e.g. 2308 R4908A). **Consult factory for details**.

Exit Series – *Handed*

Fits doors machined per ANSI A115.1 (Type 86) Mortise Lock preparation.

BACKSET - 2-3/4″.

CASE - Wrought Steel, Zinc Dichromate finish.

LOCK FRONT PLATE - 8″ x 1-1/4″ Bronze, Brass or Stainless Steel, pivots for beveled or square edged doors.

LATCHBOLT - Stainless Steel, Deadlocking, 3/4″ throw, anti-friction.

GUARDBOLT - Stainless Steel, sliding type.

FINISHES - LOCK FRONT PLATE and STRIKE
605, 606, 612, 613, 625, 630. 630 furnished for 626 and 628 locks. For finish description see page 3.

STRIKES - No. S982, handed curved lip strike furnished standard. For optional strikes see page 30.

LOCK NO.
- M303: 01, 02 & 03 functions.
- M308: 05, 08, 14 & 15 functions.
- M310: 10 function.

NOTE - For Mortise Lock dimensions see page 28. For Mortise Lock with Electrical options see page 28.

DEVICE OPTIONS

Prefix	Description	Page
DE	Delayed Egress	24
E	Electric Lock/Unlock	28
ELR	Electric Latch Retraction	21
FL	Fire Exit Hardware	8
HC	Windstorm and Hurricane Code Device	20
LS	Latchbolt Monitoring, "03" Function	28, 29
LS	Latchbolt and Trim locked or unlocked monitoring, "08" Function	28, 29
TDS	Touchbar Monitoring Double Switch	29
TS	Touchbar Monitoring Switch	29

To specify add Prefix to Device No. (e.g. TS2303)

Prefix	Description	Page
WTDS	Weatherized Touchbar Mon. Dbl. Switch	29
WTS	Weatherized Touchbar Monitoring Switch	29

Suffix	Description	Page
ALK	Exit Alarm: battery operated	27
ALW	Exit Alarm: remote power	27
BRL	Braille Touchbar	31
CD	Cylinder Dogging	19
DS	Door Position Monitoring Switch	29
LD	Less Dogging	19
SEC	Security Screws	3
SNB	Sex Nut and Bolt	3
WALW	Weatherized Exit Alarm: remote power	27

To specify add Suffix to Device No. (e.g. 2303CD)

1700A "A" Grip

1700B "B" Grip

1700C "C" Grip

2000C "C" Grip

1. All Trims are furnished with wrought plates and extruded or cast solid grips.
2. Specify Grip Design (A,B,C) ("A" Grip furnished standard for 1700 Series Trim, "C" Grip furnished standard for 2000 Series Trim)
3. 630 Trim is furnished for 628 Devices.

Retrofit Applications

The R1700 Series Trim is designed to retrofit into other manufacturers' installations when used with the wide stile Apex Series Devices. **Consult factory for details.**

4900A "A" Lever

4900B "B" Lever

4900C "C" Lever

4900D "D" Lever

4900K "K" Knob

V4908A

Vandal Resistant Trim

A heavy duty lever trim designed to with stand abuse and vandalism. Composed of extra strength shock-absorbing "overload" springs and heavy duty investment cast stainless steel internal components. Lever returns to the "home" position eliminating the need to reset the lever.

Retrofit Applications

The R4900 Series Trim is designed to retrofit into other manufacturers' installations when used with the wide stile Apex Series **Devices.Consult factory for details.**

1. All the escutcheons and levers are castings or forgings.
2. Specify Lever or Knob Design (A,B,C,D,K) and Handing ("A" Lever x RHRB furnished standard)
3. 626 Trim furnished for 628 and 630 Devices.
4. All Lever Trims, M4908K and 4914K are Handed, Specify Hand.

- For Trim dimensions see page 34.
- Trims are BHMA certified for ANSI 156.3, Grade 1.
- Trims are through bolted and will cover 161 and 86 cutouts (except for 2000C Trim).
- Cylinder 1-1/4″ long Mortise Type, not furnished standard. For cylinder details see page 19.

ANSI Function	**01** Exit Only (cover plate)	**02** Dummy Trim	**03** Key Retracts Latchbolt	**05** Key Locks/Unlocks Thumbpiece	**08** Key Locks/Unlocks Lever/Knob	**10*** Double Cylinder Inside Key Locks/Unlocks Lever/Knob	**14** No Cylinder Lever/Knob Always Active	**15** No Cylinder Thumbpiece Always Active
Device Nos.	2301 FL2301	2302	2303** FL2303**	2305 FL2305	2308 FL2308	2310 FL2310	2314 FL2314	2315 FL2315
Trim Nos.	1701 **R**1701 2101 4901 R4901	1702A R1702A 2102C 4902A R4902A	1703A R1703A 2103C 4903A R4903A	1705A R1705A 2105C	4908A V4908A R4908A RV4908A	4908A V4908A R4908A RV4908A	4914A R4914A	1715A **R**1715A 2015C

Device with Trim:

Device No.

Add **Prefix** for options, see page 8.

Add **Suffix**: for options, see page 8.

Add **Prefix**: "V" Vandal Resistant Lever Trim
"V" Vandal Resistant Lever Trim
"R" Retrofit Trim

Add **Suffix**: Lever or Knob Design (A,B,C,D,K)
Grip Design (A,B,C)

Add **Suffix**: "KNR" Knurled Lever or Grip

TS2308CD x V4908AKNR x RHRB x 630 x S982 x 3′-0″ x 7′-0″ x 1-3/4″

Device w/options | Trim No. | Hand | Finish | Strike | Door Size

Device Only: Device no., hand, finish, strike, and door size including thickness:
(e.g. TS2108CD x RHRB x 630 x S982 x 3′-0″x7′-0″x 1-3/4″)

Trim Only: Trim no., hand, finish, strike, and door size including thickness: (e.g. V4908A x RHRB x 626 x 1-3/4″)

RIM EXIT DEVICES

S988
Standard

S458
Optional

Apex 2400 Series – *Non Handed*
Apex FL2400 Fire Exit Series – *Non Handed*

DOORS - For all types of single and double doors with a mullion. For mullions, see page 18. Available for 1-3/4″ to 2-1/4″ thick, up to 4′-0″ wide opening. For thicker door, consult factory. Furnished standard for 1-3/4″ thick, 3′-0″ wide opening.

FUNCTIONS - A Universal Exit Device. Add Trim for desired function.

BASE MATERIAL - The Cover, Touchbar, Device Channel, Lock/Hinge Side Filler and End Cap are furnished of heavy wrought Brass, Bronze or Stainless Steel. US28 Devices are furnished with Aluminum, Brass, Bronze and Stainless Steel components. See “Finish & Base Material” chart on page 3.

CHASSIS - Investment Cast Steel, Zinc Dichromated.

LATCHBOLT - Stainless Steel, Deadlocking, 3/4″ throw.

STRIKES - No. S988, standard for Aluminum Door applications, Black Powder Coated Stainless Steel Roller Strike. No. S458, optional for Hollow Metal Door or Mullion applications, please specify when ordering. For optional strike information see page 30.

DOGGING - 1/4″ turn hex key dogging standard. NOT available on Fire Exit Hardware.

TOUCHBAR HEIGHT - 39-15/16″ from floor standard. May be varied as situation dictates.

UL LISTED - Panic and Fire Exit Hardware. For FIRE EXIT HARDWARE Ratings see page 35. Conforms to UL10C and UBC 7-2.

ANSI/BHMA - Devices are BHMA certified for ANSI 156.3, Grade 1.

FINISHES - 605, 606, 612, 613, 625, 628, 630. For finish description see page 3.

CYLINDERS - Rim Type for “03” function, Mortise type for “08” function. Use 1-1/4″ long standard mortise cylinder. Cylinders are not furnished standard. Specify when required. For cylinder details see page 19.

STILE WIDTH - See Stile Information on page 33.

DEVICE OPTIONS

Prefix	Description	Page
DE	Delayed Egress	24
ELR	Electric Latch Retraction	21
FL	Fire Exit Hardware	10
TDS	Touchbar Monitoring Double Switch	29
TS	Touchbar Monitoring Switch	29
WTDS	Weatherized Touchbar Mon. Dbl. Switch	29
WTS	Weatherized Touchbar Monitoring Switch	29

To specify add Prefix to Device No. (e.g. TS2403)

Suffix	Description	Page
ALK	Exit Alarm: battery operated	27
ALW	Exit Alarm: remote power	27
BRL	Braille Touchbar	31
CD	Cylinder Dogging	19
DS	Door Position Monitoring Switch	29
LD	Less Dogging	19
SEC	Security Screws	3
SNB	Sex Nut and Bolt	3
WALW	Weatherized Exit Alarm: remote power	27

To specify add Suffix to Device No. (e.g. 2403CD)

2900A "**A**" Lever | **2900B** "**B**" Lever | **2900C** "**C**" Lever | **2900D** "**D**" Lever | **2000C** "**C**" Grip

1. All the escutcheons and levers are castings or forgings.
2. For Lever Trim specify Lever Design (A, B, C, D) and Handing ("A" Lever RHRB furnished standard).
3. For 2900 Series Trim, 626 finish is furnished for 628 and 630 Devices.
4. 2000 Series Trim is furnished with a wrought plate and extruded solid "C" Grip.

- For Trim dimensions see page 34.
- Trims are BHMA certified for ANSI 156.3, Grade 1.
- Trims are through bolted.
- Cylinder, not furnished standard – Rim type for "03" function, 1-1/4"long mortise type for "08" function. For cylinder details see page 19.

ANSI Function	**01** Exit Only (cover plate)	**02** Dummy Trim	**03** Key Retracts Latchbolt	**08** Key Locks/Unlocks Lever	**14** No Cylinder Lever Always Active
Device Nos.	2401 FL2401	2402	2403* FL2403*	2408 FL2408	2414 FL2414
Trim Nos.	2901 2001	2902A 2002C	2903A 2003C	2908A	2914A

Device with Trim:

Device No.

Add **Prefix** for options, see page 10.

Add **Suffix**: for options, see page 10.

Add **Suffix**: Lever Design (A,B,C,D)
Grip Design (C)

Add **Suffix**: "KNR" Knurled Lever

TS2408CD x 2908AKNR x RHRB x 630 x S988 x 3'-0" x 7'-0" x 1-3/4"

Device w/options | Trim No. | Hand | Finish | Strike | Door Size

Device Only: Device no., hand, finish, strike, and door size including thickness:
(e.g. TS2408CD x RHRB x 630 x S988 x 3'-0" x7'-0" x 1-3/4")

Trim Only: Trim no., hand, finish, strike, and door size including thickness: (e.g. 2908A x RHRB x 626 x 1-3/4")

* 2403 & FL2403 x Cylinder Only Application includes Cylinder Attachment Kit "NCA-03"

NARROW CONCEALED VERTICLE ROD EXIT DEVICES

S519

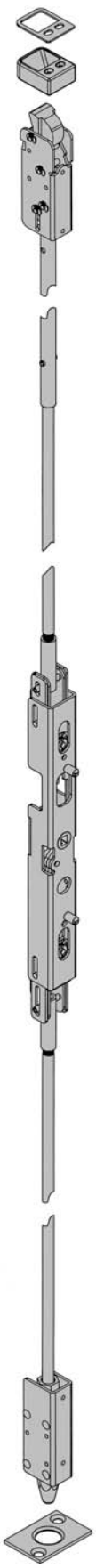

S460

Apex 2600 Series – *Reversible*
Apex FL2600 Fire Exit Series – *Reversible*

DOORS - For all types of single and double door applications. Available for 1-3/4″ to 2-1/4″ thick, up to 4'-0″ wide by 10'-0″ high openings. For thicker doors, consult factory. Furnished standard for 1-3/4″ thick, 3'-0″ wide by 6'-8″ to 8'-0″ high openings.

FUNCTIONS - A Universal Exit Device. Add Trim for desired function.

BASE MATERIAL - Side Filler and End Cap are furnished of heavy wrought Brass, Bronze or Stainless Steel. 628 Devices are furnished with Aluminum, Brass, Bronze and Stainless Steel components. See "Finish & Base Material" chart on page 3.

CHASSIS - Lock Stile Assembly - Investment Cast Steel, Zinc Dich-romated.

TOP LATCHBOLT - Stainless Steel, Deadlocking, 3/4″ throw.

TOP STRIKE - No. S519 Surface applied, Investment Cast Stainless Steel, Black Powder Coated.

BOTTOM STRIKE - No. S460, Flush mounted, Steel, Black Powder Coated.

DOGGING - 1/4″ turn hex key dogging standard. NOT available on Fire Exit Hardware.

TOUCHBAR HEIGHT - 39-15/16″ from floor standard. Specify required height if other than standard.

UL LISTED - Panic and Fire Exit Hardware. For FIRE EXIT HARDWARE Ratings see page 35. Conforms to UL10C and UBC 7-2.

ANSI/BHMA - Devices are BHMA certified for ANSI 156.3, Grade 1.

FINISHES - 605, 626, 612, 613, 625, 628, 630. For finish description see page 3.

CYLINDERS - Rim Type for "03" function, 1-1/4″ Long Mortise Type for "08" function. Cylinders are not furnished standard. Specify when required. For cylinder details see page 19.

BOTTOM BOLT - Steel plated, independent action 5/8″ throw, with adjustment range to suit 3/4″ door undercut.

CENTER CHASSIS - Steel plated, heavy wrought Steel Assembly with lock in place Top and Bottom Latch Adjustors. Adjustment is accessible through the door after installation.

STILE WIDTH - See Stile Information on page 33.

LESS BOTTOM ROD (LBR) OPTION - Specify suffix "LBR" (e.g. 2603LBR). See UL FIRE LABEL RATING Chart on page 35. Fire Rated Devices include FB277 Fire Bolt Assembly.

DEVICE OPTIONS

Prefix	Description	Page
DE	Delayed Egress	24
ELR	Electric Latch Retraction	21
FL	Fire Exit Hardware	12
TDS	Touchbar Monitoring Double Switch	29
TS	Touchbar Monitoring Switch	29
WTDS	Weatherized Touchbar Mon. Dbl. Switch	29
WTS	Weatherized Touchbar Mon. Switch	29

To specify add Prefix to Device No. (e.g. TS2603)

Suffix	Description	Page
ALK	Exit Alarm: battery operated	27
ALW	Exit Alarm: remote power	27
BRL	Braille Touchbar	31
CD	Cylinder Dogging	19
DS	Door Position Monitoring Switch	29
LBR	Less Bottom Rod	12
LD	Less Dogging	19
SEC	Security Screws	3
SNB	Sex Nut and Bolt	3
WALW	Weatherized Exit Alarm: remote power	27

To specify add Prefix to Device No. (e.g. TS2603)

2900A
"A" Lever

2900B
"B" Lever

2900C
"C" Lever

2900D
"D" Lever

1. All the escutcheons and levers are castings or forgings.
2. Specify Lever Design (A, B, C, D) and Handing ("A" Lever RHRB furnished standard).
3. 626 finish is furnished for 628 and 630 Devices.

- For Trim dimensions see page 34.
- Trims are BHMA certified for ANSI 156.3, Grade 1.
- Trims are through bolted.
- Cylinder, not furnished standard – Rim type for "03" function, 1-1/4"long mortise type for "08" function. For cylinder details see page 19.

ANSI Function	**01** Exit Only (cover plate)	**02** Dummy Trim	**03** Key Retracts Latchbolt	**08** Key Locks/Unlocks Lever	**14** No Cylinder Lever Always Active
Device Nos.	2601 FL2601	2602	2603* FL2603*	2608 FL2608	2614 FL2614
Trim Nos.	2901	2902A	2903A	2908A	2914A

Device with Trim:

Device No.

Add **Prefix** for options, see page 12.

Add **Suffix**: for options, see page 12.

Add **Suffix**: Lever Design (A,B,C,D)

Add **Suffix**: "KNR" Knurled Lever

TS2608CD x 2908AKNR x RHRB x 630 x 3'-0" x 7'-0" x 1-3/4"

Device w/options — Trim No. — Hand — Finish — Door Size

Device Only: Device no., hand, finish, strike, and door size including thickness:
(e.g. TS2608CD x RHRB x 630 x 3'-0" x7'-0" x 1-3/4")

Trim Only: Trim no., hand, finish, strike, and door size including thickness: (e.g. 2908A x RHRB x 626 x 1-3/4")

* 2603 & FL2603 x Cylinder Only Application includes Cylinder Attachment Kit "NCA-03"

WOOD DOOR CONCEALED VERTICLE ROD EXIT DEVICES

S519

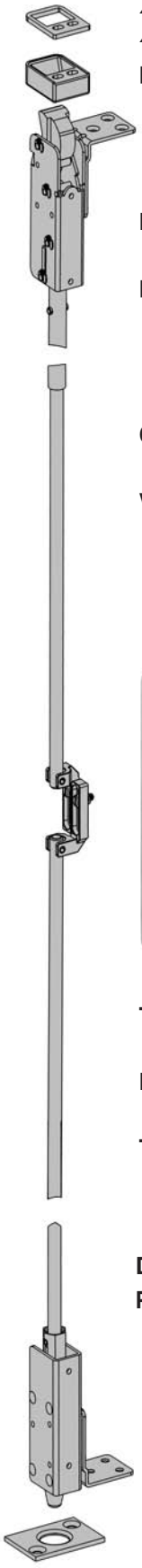

S460

Apex 2700 Series – *Reversible*
Apex FL2700 Fire Exit Series – *Reversible*

DOORS - For all types of single and double door applications. Available for 1-3/4″ to 2-1/4″ thick, up to 4′-0″ wide by 10′-0″ high openings. For thicker doors, consult factory. Furnished standard for 1-3/4″ thick, 3′-0″ wide by 6′-8″ to 8′-0″ high openings.

FUNCTIONS - A Universal Exit Device. Add Trim for desired function.

BASE MATERIAL - Side Filler and End Cap are furnished of heavy wrought Brass, Bronze or Stainless Steel. 628 Devices are furnished with Aluminum, Brass, Bronze and Stainless Steel components. See “Finish & Base Material” chart on page 3.

CHASSIS - Lock Stile Assembly - Investment Cast Steel, Zinc Dich-romated.

VERTICAL RODS - Steel, plated. Top Rod is adjustable from 6′-8″ to 8′-0″ or from 8′-1″ to 10′-0″. Additional adjustments are available through the lock front filler.

BOTTOM STRIKE - No. S460 Flush mounted, Steel, Black Powder Coated.

DOGGING - 1/4 turn hex key dogging standard. NOT available on Fire Exit Hardware.

TOUCHBAR HEIGHT - 39-15/16 from floor standard. Specify required height if other than standard.

REVERSIBLE - Reversible for all functions and trims. Standard packaging RHRB.

UL LISTED - Panic and Fire Exit Hardware. For FIRE EXIT HARDWARE Ratings see page 35. Conforms to UL10C and UBC 7-2.

ANSI/BHMA - Devices are BHMA certified for ANSI 156.3, Grade 1.

FINISHES - 605, 606, 612, 613, 625, 628, 630. For finish description see page 3.

CYLINDERS - Rim Type, not furnished standard. Specify when required. For cylinder details see page 19.

TOP LATCHBOLT - Stainless Steel, Deadlocking, 3/4″ throw.

BOTTOM BOLT - Steel plated, independent action 5/8″ throw, with adjustment range to suit 3/4 door undercut.

TOP STRIKE - No. S519 Surface applied, Investment Cast Stainless Steel, Black Powder Coated.

STILE WIDTH - See Stile Information on page 32.

LESS BOTTOM ROD (LBR) OPTION - Specify suffix “LBR” (e.g. 2703LBR). See UL FIRE LABEL RATING Chart on page 35. Fire Rated Devices include FB277 Fire Bolt Assembly.

DEVICE OPTIONS

Prefix	Description	Page
DE	Delayed Egress	24
E	Electric Device	28
ELR	Electric Latch Retraction	21
FL	Fire Exit Hardware	14
LS	Latchbolt Monitoring Switch	29
TDS	Touchbar Monitoring Double Switch	29
TS	Touchbar Monitoring Switch	29
WTDS	Weatherized Touchbar Mon. Dbl. Switch	29
WTS	Weatherized Touchbar Mon. Switch	29

To specify add Prefix to Device No. (e.g. TS2703)

Suffix	Description	Page
ALK	Exit Alarm: battery operated	27
ALW	Exit Alarm: remote power	27
BRL	Braille Touchbar	31
CD	Cylinder Dogging	19
DS	Door Position Monitoring Switch	29
LBR	Less Bottom Rod	14
LD	Less Dogging	19
SEC	Security Screws	3
SNB	Sex Nut and Bolt	3
WALW	Weatherized Exit Alarm: remote power	27

To specify add Prefix to Device No. (e.g. TS2703)

1700A "A" Grip

1700B "B" Grip

1700C "C" Grip

2000C "C" Grip

1. All Trims are furnished with wrought plates and extruded or cast solid grips.
2. Specify Grip Design (A,B,C) ("A" Grip furnished standard for 1700 Series Trim, "C" Grip furnished standard for 2000 Series Trim)
3. 630 Trim is furnished for 628 Devices.

4900A "A" Lever

4900B "B" Lever

4900C "C" Lever

4900D "D" Lever

4900K "K" Knob

V4908A

Vandal Resistant Trim

A heavy duty lever trim designed to with stand abuse and vandalism. Composed of extra strength shock-absorbing "overload" springs and heavy duty investment cast stainless steel internal components. Lever returns to the "home" position eliminating the need to reset the lever.

1. All the escutcheons and levers are castings or forgings.
2. Specify Lever or Knob Design (A,B,C,D,K) and Handing ("A" Lever x RHRB furnished standard)
3. 626 Trim furnished for 628 and 630 Devices.

- For Trim dimensions see page 34.
- Trims are BHMA certified for ANSI 156.3, Grade 1.
- Trims are through bolted and will cover 161 and 86 cutouts (except for 2000C Trim).
- Cylinder, Rim Type, not furnished standard. For cylinder details see page 19.

ANSI Function	**01** Exit Only (cover plate)	**02** Dummy Trim	**03** Key Retracts Latchbolt	**05** Key Locks/Unlocks Thumbpiece	**08** Key Locks/Unlocks Lever/Knob	**14** No Cylinder Lever/Knob Always Active	**15** No Cylinder Thumbpiece Always Active
Device Nos.	2701 FL2701	2702	2703** FL2703**	2705 FL2705	2708 FL2708	2714 FL2714	2715 FL2715
Trim Nos.	1701 2001 4901	1702A 2002C 4902A	1703A 203C 4903A	1705A 2005C	4908A V4908A	4914A	1715A 2015C

Device with Trim:

Device No.

Add **Prefix** for options, see page 14.

Add **Suffix**: for options, see page 14.

Add **Prefix**: "V" Vandal Resistant Lever Trim

Add **Suffix**: Lever or Knob Design (A,B,C,D,K) Grip Design (A,B,C)

Add **Suffix**: "KNR" Knurled Lever or Grip

TS2708CD x V4908AKNR x RHRB x 630 x 3'-0" x 7'-0" x 1-3/4"

Device w/options — Trim No. — Hand — Finish — Door Size

Device Only: Device no., hand, finish, strike, and door size including thickness: (e.g. TS2708CD x RHRB x 630 x 3'-0" x7'-0" x 1-3/4")

Trim Only: Trim no., hand, finish, strike, and door size including thickness: (e.g. V4908A x RHRB x 626 x 1-3/4")

* 2703 & FL2703 X Cylinder Only Application includes Cylinder Attachment Kit "CA-03".

CONCEALED VERTICLE ROD EXIT DEVICES

S519

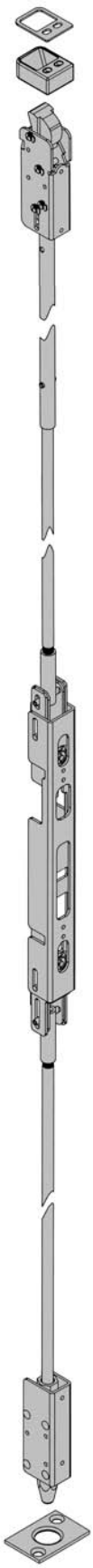

S460

Apex 2800 Series – *Reversible*
Apex FL2800 Fire Exit Series – *Reversible*

DOORS - For all types of single and double door applications. Available for 1-3/4″ to 2-1/4″ thick, up to 4'-0″ wide by 10-0 high openings. For thicker doors, consult factory. Furnished standard for 1-3/4″ thick, 3'-0″ wide by 6'-8″ to 8'-0″ high openings.

FUNCTIONS - Functions are field selectable. The device is furnished for a desired function if specified. If not specified the "03" function is furnished standard.

BASE MATERIAL - The Cover, Touchbar, Device Channel, Lock/Hinge Side Filler and End Cap are furnished of heavy wrought Brass, Bronze or Stainless Steel. US28 Devices are furnished with Aluminum, Brass, Bronze and Stainless Steel components. See "Base Material and Finish Chart" on page 3.

CHASSIS - Lock Stile Assembly - Investment Cast Steel, Zinc Dichromated.

VERTICAL RODS - Steel, plated. Top Rod is adjustable from 6'-8″ to 8'-0″ or from 8'-1″ to 10'-0″.

TOP LATCHBOLT - Stainless Steel, Deadlocking, 3/4″ throw.

TOP STRIKE - No. S519 Surface applied, Investment Cast Stainless Steel, Black Powder Coated.

BOTTOM STRIKE - No. S460 Flush mounted, Steel, Black Powder Coated.

DOGGING - 1/4″ turn hex key dogging standard. NOT available on Fire Exit Hardware.

TOUCHBAR HEIGHT - 39-15/16″ from floor standard. Specify required height if other than standard.

REVERSIBLE - Reversible for all functions and trims. Standard packaging RHRB.

UL LISTED - Panic and Fire Exit Hardware. For FIRE EXIT HARDWARE Ratings see page 35. Conforms to UL10C and UBC 7-2.

ANSI/BHMA - Devices are BHMA certified for ANSI 156.3, Grade 1.

FINISHES - 605, 606, 612, 613, 625, 628, 630. For Finish description see page 3.

CYLINDERS - Rim Type, not furnished standard. Specify when required. For cylinder details see page 19.

BOTTOM BOLT - Steel plated, independent action 5/8 throw, with adjustment range to suit 3/4 door undercut.

CENTER CHASSIS - Steel plated, heavy wrought Steel Assembly with lock in place Top and Bottom Latch Adjustors. Adjustment accessible through the door after installation.

STILE WIDTH - See Stile Information on page 32.

LESS BOTTOM ROD (LBR) OPTION - Specify suffix "LBR" (e.g. 2808LBR). See UL FIRE LABEL RATING chart on page 35. Fire Rated Devices include FB277 Fire Bolt Assembly.

DEVICE OPTIONS

Prefix	Description	Page
DE	Delayed Egress	24
E	Electric Device	28
ELR	Electric Latch Retraction	21
FL	Fire Exit Hardware	16
HC	Windstorm and Hurricane Code Device	20
LS	Latchbolt Monitoring Switch	29
TDS	Touchbar Monitoring Double Switch	29
TS	Touchbar Monitoring Switch	29
WTDS	Weatherized Touchbar Mon. Dbl. Switch	29
WTS	Weatherized Touchbar Mon. Switch	29

To specify add Prefix to Device No. (e.g. TS2803)

Suffix	Description	Page
ALK	Exit Alarm: battery operated	27
ALW	Exit Alarm: remote power	27
BRL	Braille Touchbar	31
CD	Cylinder Dogging	9
DS	Door Position Monitoring Switch	29
LBR	Less Bottom Rod	16
LD	Less Dogging	19
SEC	Security Screws	3
SNB	Sex Nut and Bolt	3
WALW	Weatherized Exit Alarm: remote power	27

To specify add Prefix to Device No. (e.g. TS2803)

1700A
"**A**" Grip

1700B
"**B**" Grip

1700C
"**C**" Grip

C03
Cast Plate
"Pull by others"

The CVR2803 with "Pull by Other" must be specified with No. C03 Cylinder Attachment Trim to secure the Rim Cylinder. Specify finish.

1. All Trims are furnished with wrought plates and extruded or cast solid grips.
2. Specify Grip Design (A,B,C) ("A" Grip furnished standard for C1700 Series Trim)
3. 630 Trim is furnished for 628 Devices.

4900A
"**A**" Lever

4900B
"**B**" Lever

4900C
"**C**" Lever

4900D
"**D**" Lever

4900K
"**K**" Knob

V4908A
Vandal Resistant Trim

A heavy duty lever trim designed to with stand abuse and vandalism. Composed of extra strength shock-absorbing "overload" springs and heavy duty investment cast stainless steel internal components. Lever returns to the "home" position eliminating the need to reset the lever.

1. All the escutcheons and levers are castings or forgings.
2. Specify Lever or Knob Design (A,B,C,D,K) and Handing ("A" Lever x RHRB furnished standard)
3. 626 Trim furnished for 628 and 630 Devices.

- For Trim dimensions see page 34.
- Trims are BHMA certified for ANSI 156.3, Grade 1.
- Trims are through bolted and will cover 161 and 86 cutouts (except for 2000C Trim).
- Cylinder, Rim Type, not furnished standard. For cylinder details see page 19.

ANSI Function	**01** Exit Only (cover plate)	**02** Dummy Trim	**03** Key Retracts Latchbolt	**05** Key Locks/Unlocks Thumbpiece	**08** Key Locks/Unlocks Lever/Knob	**14** No Cylinder Lever/Knob Always Active	**15** No Cylinder Thumbpiece Always Active
Device Nos.	2801 FL2801	2802	2803** FL2803**	2805 FL2805	2808 FL2808	2814 FL2814	2815 FL2815
Trim Nos.	C1701 4901	C1702A 4902A	C03 C1703A 4903A	1705A	4908A V4908A	4914A	**C**1715A

Device with Trim:

Device No.

Add **Prefix** for options, see page 16.

Add **Suffix**: for options, see page 16.
Add **Prefix**: "V" Vandal Resistant Lever Trim
"V" Vandal Resistant Lever Trim
"V" Vandal Resistant Lever Trim

Add **Suffix**: Lever or Knob Design (A,B,C,D,K)
Grip Design (A,B,C)

Add **Suffix**: "KNR" Knurled Lever or Grip

TS2808CD x V4908AKNR x RHRB x 630 x 3'-0" x 7'-0" x 1-3/4"

Device w/options — Trim No. — Hand — Finish — Door Size

Device Only: Device no., hand, finish, strike, and door size including thickness:
(e.g. TS2808CD x RHRB x 630 x 3'-0" x7'-0" x 1-3/4")

Trim Only: Trim no., hand, finish, strike, and door size including thickness: (e.g. V4908A x RHRB x 626 x 1-3/4")

MULLIONS

Mullion Cap
MC822

Mullion Base
MB822

Mullion Cap
MC811

Mullion Base
MB811

Key Removable Mullion Cap
KMC822
(Rim Cylinder required)

Mullion Cap Spacer
MCS822

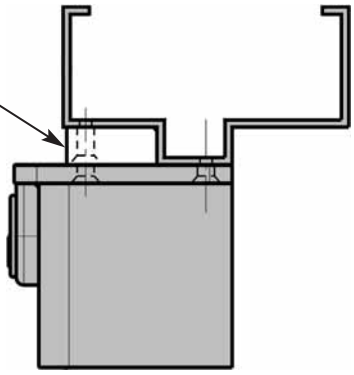

Interlock
S1447

Stabilizer
ST989

Removable Mullions

The Mullion is used to adapt a double door opening to two single door openings with Rim Exit Devices. When the full width of an opening is required, the mullion may be removed.

KEY REMOVABLE MULLION (KR) - Provides a secure yet quick & easy means of removing the 822 or FL822 Mullion. The mullion can be reinstalled and locked without the need of the key.

STOCK SIZE - For openings 8′-0″ high. For openings less than 8′-0″ high the mullion can be cut down. For openings greater than 8′-0″ high using the 822, KR822 or 811 mullions, consult factory.

FINISHES - 600, 689, 695. For Finish description see page 3.

822, FL822, KR822, FLKR822 Mullion

U.L. LISTED - FL822 and FLKR822 listed for Fire Exit Hardware. For FIRE LABEL RATING Chart see page 35.

MULLION - 2″ x 3″ Steel.

MULLION BASE - Investment Cast Steel, 2″ wide 3-1/2″ deep. Furnished with steel anchors for concrete floors.

INTERLOCK - Black Powder Coated Investment Cast Stainless Steel. Furnished standard for FL822 and FLKR822 Mullions. It interlocks the mullion to the Rim Active Case and S300 or S301 Strike.

STABILIZERS - Black Powder Coated Steel. Stabilizers are furnished standard for FL822 and FLKR822 Mullions.

MULLION CAP SPACER - Minimum width 3-1/2″. For 2-1/4″ frame spacer specify part no. MCS822.

822, FL822 MULLION CAP - MC822 Investment Cast Steel, 4″ wide 3-5/8″ deep.

KR822, FLKR822 KEY REMOVABLE MULLION CAP ASSEMBLY - Investment Cast Steel - can be ordered to convert existing 822 or FL822 mullions to Keyed Removable Mullions. Retrofits to the hole pattern of an MC822 Mullion Cap. To order specify KMC822 or KMC822F. For wire run information, please consult factory.

CYLINDER - not furnished standard - Rim Type required. See page 19 for cylinder details.

HC822, HCKR822 Mullion

MULLION - 2″ x 3″ Steel Mullion is reinforced with a 1-1/2″ x 2-1/2″ 11 gage Steel Tube. MC822 or KMC822 Mullion Cap and MB822 Mullion Base Assemblies are used to secure the HC Mullion in the door opening. The S1447 Interlock must be used to Interlock the Active Case with the Strike and is furnished standard with the HC822 Mullion.

811 Mullion

MULLION - 2″ x 2″ Steel Mullion.

MULLION CAP - Cast 4-1/2″ wide x 2-5/16″, furnished with machine screws for metal frames.

MULLION BASE - Cast 2″ wide x 2-3/4″, furnished with sheet metal screws and plastic anchors.

To Order: Specify Mullion No. Height Finish (e.g. 822 x 8′-0″ x 600)

Cylinder Dogging

Available for all Apex Series Devices except Fire Exit Hardware and Delayed Egress Devices.

Cylinder Dogging provides the ability to lock down the touch bar with a key cylinder so the door can be used in the push/pull mode. To order, specify suffix "CD" (e.g. 2103CD). Requires the use of a 1-1/4 mortise cylinder, not furnished standard. Specify when required.

Less Dogging

Available for all Apex Series Devices except Fire Exit

Cylinder Dogging Kit

To convert from hex key dogging to cylinder dogging in the field, a cylinder dogging kit is available. The kit consists of a channel filler, blocking ring, cylinder locator and lock nut. Requires the use of a 1-1/4″ mortise cylinder, not furnished standard. Specify when required.

NOTE - The channel fillers are different lengths for narrow and wide stile devices. "NCDK" - Narrow Cylinder Dogging Kit.

To Order: specify CDK-3, NCDK-3 for up to 3-0 and CDK4, NCDK-4 for devices up to 4-0.

2110 Rim Device - *Handed*

2310 Mortise Device - *Handed*

Double Cylinder - *Handed*

("10" Function)

The Double Cylinder option is available on the Wide Stile Rim and Mortise Exit Devices. The inside key cylinder locks or unlocks the outside Trim and the outside key cylinder retracts the latchbolt. Specify Outside Trim with "08" function.

When only the inside key cylinder is required to lock or unlock the outside trim and no outside cylinder operation is necessary, specify outside trim with "14" function.

Cylinders - Not furnished standard.
Rim Devices - Two rim type required.
Mortise Devices - One rim type and one 1-1/4″ long mortise type required.

Type	Device No.		Trim No.
Rim	2110, FL2110	x	4908A, V4908A, 4914A
Mortise	2310, FL2310	x	M4908A, VM4908A, M4914A

To Order: Specify Hand and Finish
(e.g. 2110 4908A RHRB 630)

Double Cylinder Kits - *Handed*

The kit is available to convert 2103, FL2103, 2303 and FL2303 devices to 2110, FL2110, 2310 and FL2310 in the field.

Rim Kit No. RDC10 - Includes locking assembly, cylinder assembly, cylinder collar and active case cover. Two rim type cylinders are required, not furnished standard.

Mortise Kit No. MDC10 - Includes M310 Mortise Lock, extension assembly, cylinder bracket, cylinder collar and active case cover. One rim type and one 1-1/4″ long mortise type cylinder required, not furnished standard.

To Order: Specify Hand and Finish
(e.g. RDC10 RHRB 630)

Cylinders

Cylinders are not furnished standard with the device or trim. BEST 7 pin standard. Available in 612 finish. Specify Type and finish when ordering. (e.g. 1E74 x 630)

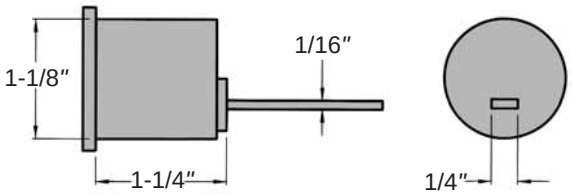

Rim Cylinder - 1E74

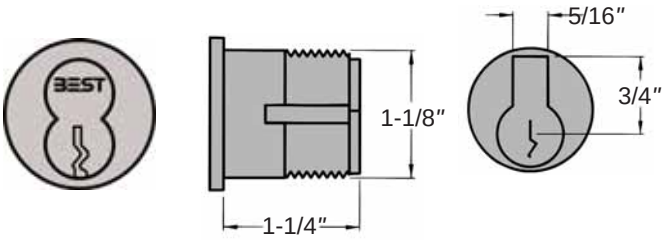

Mortise Cylinder - 3E74

WINDSTORM AND HURRICANE CODE DEVICES

HC2100 , HC2200, HC2300, HC2800 Series Devices HC822, KRHC822 Mullions

The Hurricane Devices have passed the structural tests as per South Florida Building Code Protocol. These tests are designed to provide sufficient resistance to high wind forces and wind- borne debris. The devices provide a high level of security for door openings even if hurricane rated door components are not required. A brief description of the test is provided below.

Static Air Pressure Test - Simulates wind loading by evenly distributing air pressure to the face of the door assembly in positive and negative directions. The door assembly must not have excessive deflection or deformation and must remain secure in the chamber.

Missile Impact Test - Simulates impacts created by wind driven debris by impacting the exterior face of the doors with a 2 x 4 board at 50 feet per second. The board must not pass through the doors and the doors must remain secure in the chamber.

Cyclic Wind Pressure Test - Simulates wind gusts by repeating cycles of positive and negative air pressure to determine that the integrity of the door assembly is not compromised with the Missile Impact Test. The door assembly must not have excessive deflection or deformation and must remain secure in the chamber.

Component Approval - These devices are approved as components to be used with any 16 gage Single or a Pair of Hollow Metal Doors and Frames holding a current Notice of Acceptance (NOA). The lowest Design Pressure Rating of the doors or components shall apply.

SINGLE DOOR	Door Opening	Device Series	Design Pressure
Rim Device	4'-0"W 8'-0"H	HC2100	80 PSF
Surface Vertical Rod Device	4'-0"W 8'-0"H	HC2200	80 PSF
Mortise Device	4'-0"W 8'-0"H	HC2300	60 PSF
Concealed Vertical Rod Device	4'-0"W 8'-0"H	HC2800	80 PSF
PAIR OF DOORS			
Two Rim Devices with Mullion	8'-0"W 8'-0"H	HC2100 x HC822, KRHC822	80 PSF
Two Surface Vertical Rod Device	8'-0"W 8'-0"H	HC2200 x HC2200	80 PSF
Mortise Device x Concealed Vertical Rod Device	8'-0"W 8'-0"H	HC2300 x HC2800	60 PSF
Two Concealed Vertical Rod Device	8'-0"W 8'-0"H	HC2800 x HC2800	80 PSF

Compliance - HC2100, HC2200, HC2300, HC2800 Series Devices and HC822, KRHC822 Mullions comply with the Florida Building Code including the High Velocity Hurricane Zone. The Miami-Dade County Product Control Division has approved these devices to be used in Miami-Dade County and other areas where allowed by the Authority Having Jurisdiction (AHJ). Product Control **NOA No. 05-1102-12** is issued for these devices which expires on **September 30, 2009**.

To see the NOA documentation online: http://www.miamidade.gov/buildingcode/online_product_search.asp and type in the NOA number: 05-1102-12 under the Product Search Application link.

ANSI Function		Device No.	Trim No.
01	Exit Only (cover plate	HC2101, FLHC2101 HC2201, FLHC2201 HC2301, FLHC2301 HC2801, FLHC2801	1701 2001 4901
02	Dummy Trim	HC2102 HC2202 HC2302 HC2802	1702A 2002C 4902A
03	Key Retracts Latchbolt	HC2103, FLHC2103 HC2203, FLHC2203 HC2303, FLHC2303 HC2803, FLHC2803	C03 1703 2003 4903 M4903A
05	Key Locks / Unlocks Thumbpiece	HC2105, FLHC2105 HC2205, FLHC2205 HC2305, FLHC2305 HC2805, FLHC2805	1705A 2005A M1705A M2005A
08	Key Locks / Unlocks Lever / Knob	HC2108, FLHC2108 HC2208, FLHC2208 HC2308, FLHC2308 HC2808, FLHC2808	4908A V4908A M4908A VM4908A
10	Double Cylinder Inside Key Locks / Unlocks Lever / Knob	HC2110, FLHC2110 HC2310, FLHC2310	4910A V4910A M4910A VM4910A
14	No Cylinder Lever / Knob Always Active	HC2114, FLHC2114 HC2214, FLHC2214 HC2314, FLHC2314 HC2814, FLHC2814	4914A M4914A
15	No Cylinder Thumbpiece Always Active	HC2115, FLHC2115 HC2215, FLHC2215 HC2315, FLHC2315 HC2815, FLHC2815	1715A 2015C M1715A M2015C

- Trims with the Prefix "M" are for 2300 Series Devices only.
- 2000 Series Trim not available with 2800 Series Device.
- "10" Function is handed.

Device Specifications and Options **page**

Rim Exit Devices and Trims 4,5
Surface Vertical Rod Devices and Trims 6,7
Mortise Devices and Trims 8,9
Concealed Vertical Rod Devices and Trims 16,17
HC822 & HCKR822 Mullions 18

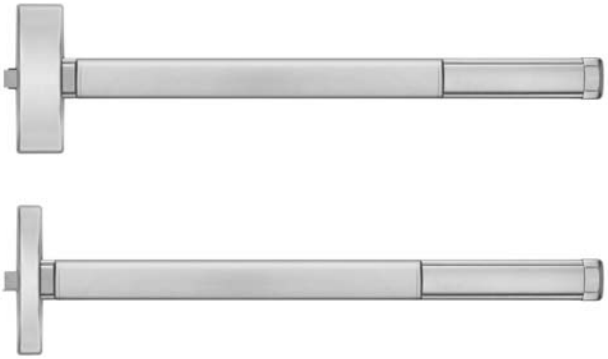

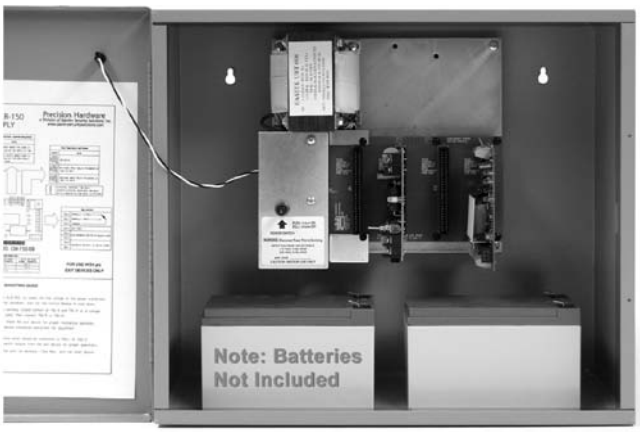

ELR150 Power supply door opened

ELR150 Power supply door closed

Available for all Series Devices

The ELR option provides remote Latch Retraction of exit devices. Continuous duty solenoids retract the Latchbolt(s) for momentary unlatching or continuously for dogging. The ELR feature can be interfaced with automatic door operators, card readers, push buttons, toggle/key switches, and fire alarm systems.

- ELR option REQUIRES ELR150 Series Power Supply.
- UL Listed for Panic and Fire for Class II Circuitry
- ELR can be used in combination with all Apex options including Hex Key or Cylinder Dogging. ELR option is not available for (DE) Delayed Egress Devices.

Door Widths: 3 Device - 2-7 to 3-0 Door
4 Device - 3-1 to 4-0 Door

The Power Supply model number is determined based on the number of devices requiring electrical power. See To Order ELR150 Power Supply below.

To order: specify prefix "ELR" (e.g. ELR2108)

ELR Conversion Kit

A standard device can be retrofit to the Electric Latch Retraction option by ordering the kits listed below. A ELR Conversion Kit **REQUIRES** a ELR150 Series Power Supply.

To Order:

Wide Stile Devices
3-0 ELRK-3, ELRKF-3
4-0 ELRK-4, ELRKF-4

Narrow Stile Devices
3-0 NELRK-3, NELRKF-3
4-0 NELRK-4, NELRKF-4

- Power may be supplied through a 4-wire continuous circuit hinge (furnished by others).

Solenoid Specifications:

Current Pulse (2 seconds max.) ..... 4.75 Amp.
Continuous ..... 3.6 VDC / 0.8 Amp.

ELR150 Series Power Supply

The ELR150 Series is a power supply REQUIRED to control ELR Devices. The power supply contains a Motherboard that will accept up to four plug-in Control Modules. Each Control Module (part #CM150-08, see page 22) controls one ELR Device and includes a Time Delay Feature. The Time Delay provides a variable (0 - 4 minutes) Latch Retraction period in response to a momentary input.

Specifications:

- UL Listed for Class II Output.
- UL 294 - Conforms to U.L. 294 Standards incorporating enhanced Access Control communication capabilities.
- Circuit breakers provide protection for Motherboard
- 115 or 230 Volt user selectable switch.
- A.C. Input = 115 Volts at 1 Amp.
- Battery Back-up / Power Tap available (see page 22).
- LED Indicator - Provides clear indication that power is available to the supply.
- Keyed Cabinet - To maintain safety and security, each Power Supply is equipped with a preinstalled key-cylinder.
- Includes lockable box with key lock.
- Dimensions: 16″ W x 14″ H x 6″ D.
- Weight: 15 lbs.

To Order ELR150 Power Supply: The model number is determined based on the number of devices requiring electrical power.

ELR150 - Power Supply, no control modules
ELR151 - Power Supply including (1) control module to control (1) exit device
ELR152 - Power Supply including (2) control modules to control (2) exit devices
ELR153 - Power Supply including (3) control modules to control (3) exit devices
ELR154 - Power Supply including (4) control modules to control (4) exit devices

To order power supply with Battery Backup specify suffix BT (e.g. ELR151BT)

ELR POWER SUPPLY ACCESSORIES

Control Module

The CM150-08 Control Module is a card that is installed in the ELR150 Series Power Supply and controls one ELR device and includes a Time Delay Feature. The Time Delay provides a variable Latch Retraction period in response to a momentary input.

Specifications:

Input:

Switch Input
- Normally open

Voltage Input
- Input Voltage: 5-24VDC or VAC
- Input Current: approx. 0.005 Amp.
- Minimum pulse width: 0.25 seconds

Output:
- Current Pulse: 4.75 Amp. (2 seconds max.)
- Continuous: 3.6 VDC / 0.8 Amp.

Time Delay:
- User selectable: 0-4 minutes delay after input is removed

Fire Alarm Terminal:
- Red LED (D3) blinks when Fire Alarm interrupts circuit
- Provides immediate termination of output

Switch Input
- Accepts normally closed contacts or 5-24 Volts from a listed fire detecting device.

Voltage Input
- Input Current: 0.005 Amp.
- Minimum pulse width: 0.25 seconds

Auxiliary Contacts:
- Relay isolated contacts provided for remote signaling (e.g. door operator)
- Normally open or normally closed contacts are rated at 0.5 Amp., 24VDC or VAC
- Contact operation follows successful operation of the ELR device.

To Order: specify CM150-08

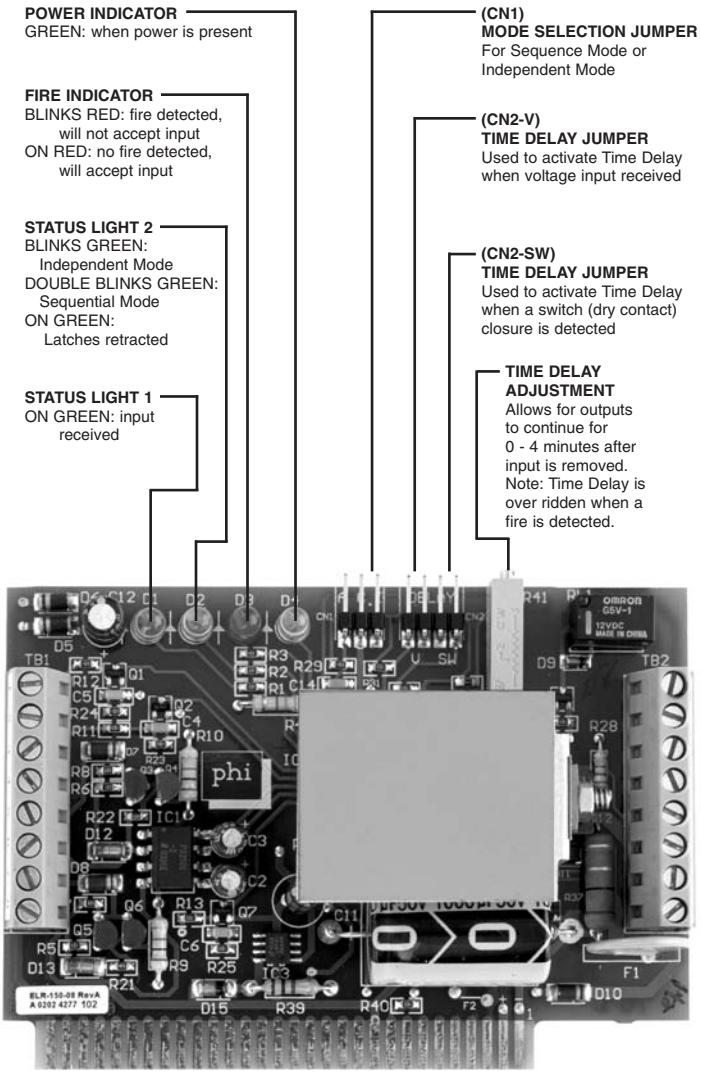

Battery Backup Power Tap

The BT150-07 Battery Backup is an optional card that can be installed in the ELR150 Series Power Supply to provide temporary power to ELR Devices in case of power shortage or outages. Uses (2) 12VDC Lead Acid batteries (furnished by others). One Amp hour set of batteries provides approximately 15 minutes of backup to four exit devices. 24V Power tap is also included to provide power to Card Readers, etc.

Electrical Ratings: 24 VDC, 0.8 Amp. - Power Tap
To Order: specify BT150-07

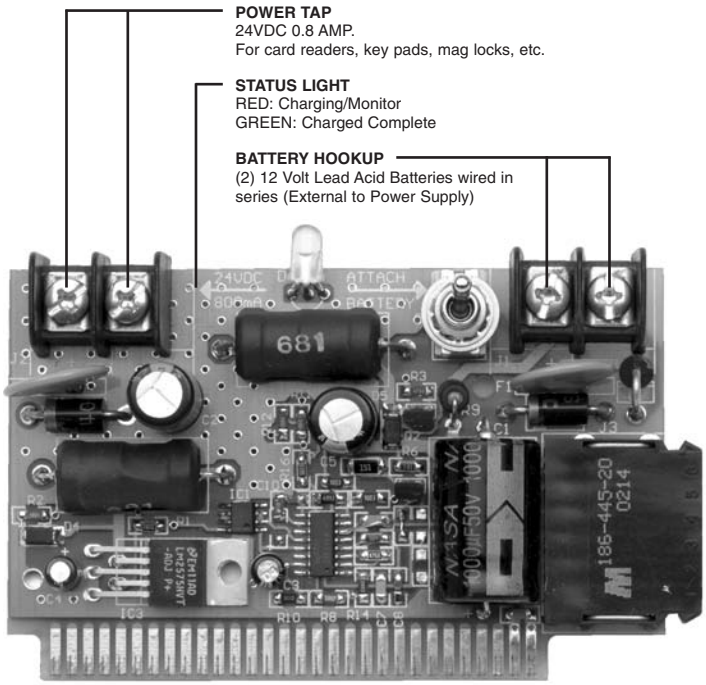

Simultaneous Pair of Doors

Pressing the push button retracts the latches on each exit device. When both exit devices have retracted latches, the control modules in the power supply signals the door operators to open the doors. The doors will remain open until released by the Time Delay feature on the Control Module.

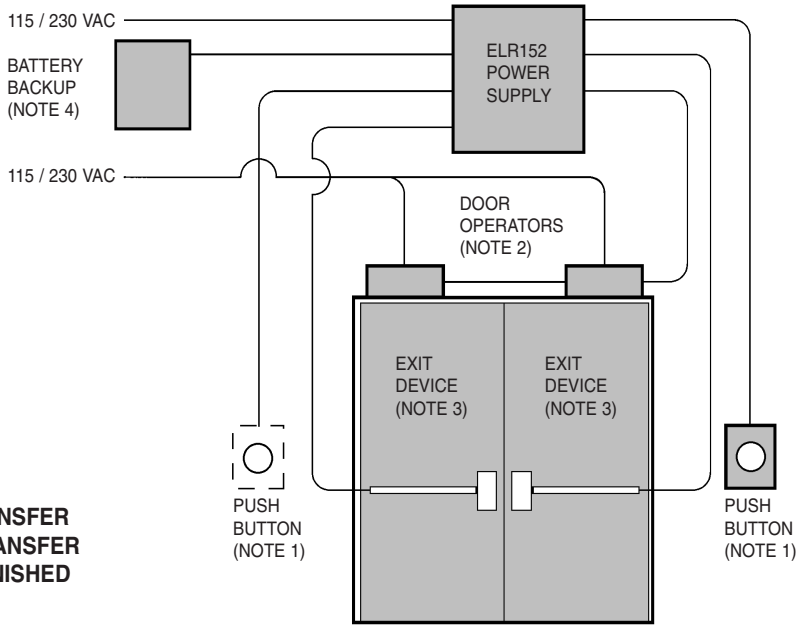

4 CONDUCTOR (28 GAGE MIN.) POWER TRANSFER REQUIRED. EPT-5 CONCEALED POWER TRANSFER (see page 29), DOOR CORD OR HINGE (FURNISHED BY OTHERS)

Two Independent Pairs of Doors

Each pair of doors are operated by pressing a push button which retracts latch(es) on each exit device. When both exit devices have retracted latches the control modules in the power supply signal the door operators (such as the Precision D-4990 Low Energy Operator) to open the doors. The doors will remain open until released by the Time Delay feature on the Control Module.

4 CONDUCTOR (28 GAGE MIN.) POWER TRANSFER REQUIRED. EPT-5 CONCEALED POWER TRANSFER (see page 29), DOOR CORD OR HINGE (FURNISHED BY OTHERS)

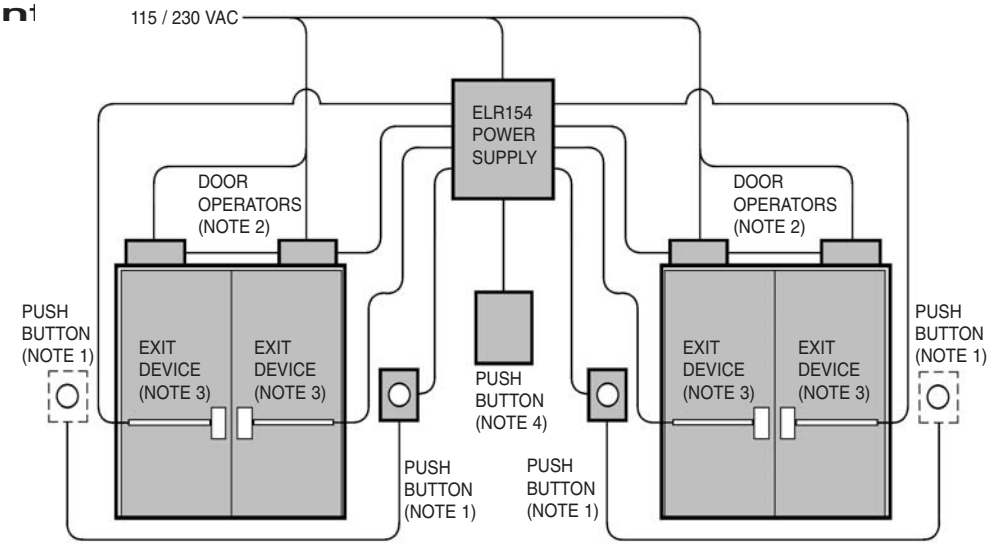

Notes:

1. Push Button may be replaced with Card Reader, keypad,etc., providing normally open contacts and/or voltage inputs. See hookup instructions in the ELR150 Installation Instructions.
2. Activation for Door Operators are provided by dry contact on the Control Module. (2) wires must be run from the Power Supply to each operator requiring control.
3. Each exit device requires (4) wires to operate. See chart to the right for proper gage and wire run.
4. When Battery Backup is used, (2) 12 gage wires, less than 3 feet long, connect batteries to Backup. Batteries must be mounted outside the power supply enclosure. Battery Backup has a Power Tap feature that can provide power to a Card Reader, keypad system, etc. See page 22 for details.

Wire Gage	Maximum Wire Run for 22 Gage Power Transfer	Maximum Wire Run for 28 Gage Power Transfer
16	75′–0″	55′–0″
14	125′–0″	75′–0″
12	200′–0″	---

DELAYED EGRESS

Delayed Egress

The Delayed Egress (DE) Exit Device provides a controlled egress for openings which require Panic or Fire Exit Hardware for safe egress. It is a self contained exit device, which when armed will deny exit to unauthorized personnel for 15 or 30 seconds, while simultaneously sounding a local or remote audible alarm. The Remote Monitoring feature will alert the security personnel that an attempt is being made to exit the opening. After the 15 (or 30) second delay of egress period the device will function as a standard exit device for safe egress.

OPERATION - The device secures the door in the locked mode with the Red LED indicating locked status. Depressing the Touchbar by accident or for less than the Nuisance Delay Time will sound the alarm without initiating the alarm sequence. Depressing the Touchbar with less than 15 pounds pressure, for longer than the Nuisance Delay Time will initiate an irreversible local audible beeping tone and a visual Red indicator until the device releases. After the delay egress time the lock releases and the alarm changes to a steady tone which continues to alarm until Reset. The remote monitoring contact output can be used to alert security personnel. The person depressing the Touchbar is denied egress (for 15 or 30 seconds) and security personnel are alerted for quick response.

TRIM - All standard device trims and functions are available, including "03" function, Trim Lock/Unlock will function normally even when the delayed egress feature is armed. The Device will only be affected when the Touchbar is depressed from the inside. All (DE) Rim and Mortise Devices are also available with Electric Lock/Unlock for the outside Trim. For details see page 28.

Available for all Apex Series Exit Devices except Surface Vertical Rod Device.

The Delayed Egress Devices are manufactured and tested to exceed ANSI 156.3 and 156.24. Devices are UL Listed as a Controlled Exit Device (FULA) and Special Locking Arrangements (FWAX) category. Meets all requirements of NFPA 101.

DOOR POSITION SWITCH - used in conjunction with the Delayed Egress Exit Device, the following security features are added: The Exit Device Alarm will sound if the door is not closed when the device is armed. The Alarm will sound if the door is forced open when the device is armed. While the device is in the arming stage you may exit the opening. When the door closes the arm/rearm time is cut short and the device is armed preventing unauthorized tailgating through the opening.

FEATURES:

FIRE ALARM CONTACTS - Fire Alarm input at any time will cut power to the delayed egress function and provide immediate egress.

ARMED-MOMENTARY EGRESS - Turning the key clockwise allowsauthorized personnel to exit without alarming. At the end of the field selectable time period (10, 20 or 30 seconds), the device will relock and rearm.

DE-DEVICE NETWORKING FEATURE - This feature allows a Delayed Egress device to arm, alarm, reset and disarm all devices on the same circuit. Each device will continue to operate independently for Momentary Egress.

30 SECOND DELAY - A 30 second delay option is available. A written approval from the authority having jurisdiction is required. Note: A "30 Second" decal is provided when the 30 Second Delay option is specified.

NUISANCE DELAY TIME - A Nuisance Delay Time helps avoid inadvertent activation. The alarm will sound when the touchbar is pressed, but the alarm sequence will not start unless the touch bar is held in for more than the Nuisance Delay Time. Delay Time is field selectable for 0, 1, 2 or 3 seconds.

INTEGRAL KEY SWITCH

Arm - The Key switch provides the means to locally arm the (DE) device.

Momentary Egress - The Key switch will provide temporary disarming to allow for momentary egress (10, 20 or 30 seconds) when the device is in the armed state. The Key switch will Disarm the device and it will function as a standard exit device.

Reset - During alarm sequence the device can be rearmed by the Key Switch.

Requires the use of a 1-1/4 mortise cylinder, not furnished standard. Specify when required.

LED STATUS INDICATOR (in the device) - A color coded LED indicates Arm, Disarm and Alarm status.

Flashing Green	-	Arming
Flashing Red	-	Armed
Green	-	Unarmed
Red	-	Alarmed
Off	-	No Power to Device (Normal Exit)

INTERNAL ALARM - The device has a 85 db horn which will sound until the device is reset.

EXTERNAL ALARM - A set of relay contacts rated at (1 amp, 24VDC) are provided for activating external local or remote audible/visual signaling devices.

EXTERNAL INHIBIT

Arm/Rearm - Accepts a contact to Arm/Rearm the device.

Momentary Egress - Accepts a contact to provide temporary disarming to allow for momentary egress when the device is in the armed state. The Momentary Egress will be engaged as long as the switch closure is maintained.

Reset - Accepts a contact to reset the device during alarm.

The (DE) devices are furnished with a decal which states:

PUSH UNTIL ALARM SOUNDS
DOOR CAN BE OPENED IN 15 SECONDS

Note: A "30 Second" decal is provided when the 30 Second Delay option is specified.

DE ELECTRICAL SPECIFICATIONS:

- DE option REQUIRES PS160 Power Supply (see below).
- 24VDC 0.5 Amp.
- UL Listed for Panic and Fire for Class II Circuitry

DOOR WIDTHS: 3 Device Min.-3-0 Door; 4 Device-3-4 to 4-0 Door
To Order: specify prefix "DE" (e.g. DEFL2108)

DELAYED EGRESS
PS160 Power Supply

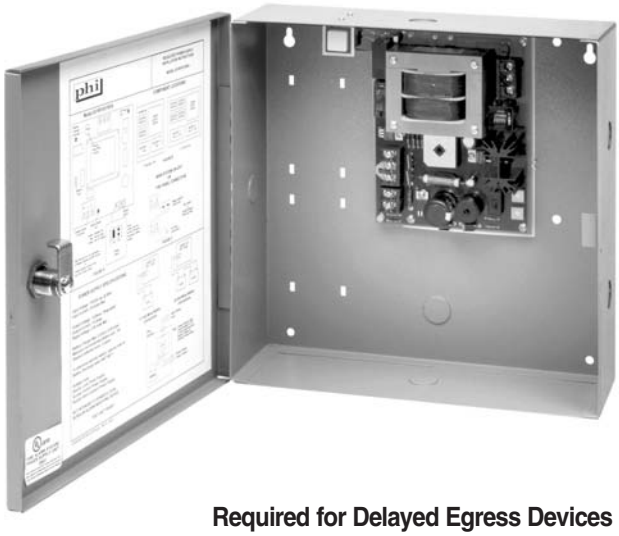

Required for Delayed Egress Devices

The PS160 Power Supply is designed as a power source for a variety of applications including Electric Locking, Exit Alarm and Delayed Egress Exit Devices.

The Power Supply uses a standard 120 VAC at 0.8 ampere input. A 230 VAC at 0.3 ampere input is available. The power supply can control up to (4) Delayed Egress Exit Devices. **Note:** Adding additional loads to the PS160 Power Supply i.e., Card readers, Horns, etc...will reduce the quantity of Delay Egress Exit Devices that may be energized by the power-source.The filtered and regulated out put power is field selectable for 12 or 24 VDC at 2 amp.

SPECIFICATIONS:

- A convenient internal on/off switch
- Fire alarm release that accepts normally closed contact
- Battery Backup with charger (27 VDC, 150mA)
- AC input is protected via a manually reset circuit breaker
- DC output is protected via an auto-reset fuse (PTC)
- LED indicators for AC input, DC output and Battery Backup status
- Includes lockable box with key lock
- Dimensions: 11.5 W x 11.5 H x 3.5 D (18 gage steel)
- Weight: 11 lbs.

To Order: specify PS160

WIRE CHART AND OHMS LAW

Minimum Wire Gauge for 12 volts AC or DC

	DISTANCE IN FEET FROM POWER SOURCE TO FARTHEST LOCKING DEVICE			
AMPS	25	50	75	100
2.00	18	16	14	14

Minimum Wire Gauge for 24 volts AC or DC

	DISTANCE IN FEET FROM POWER SOURCE TO FARTHEST LOCKING DEVICE				
AMPS	25	50	75	100	150
2.00	18	18	16	16	14

DELAYED EGRESS APPLICATION CHARTS

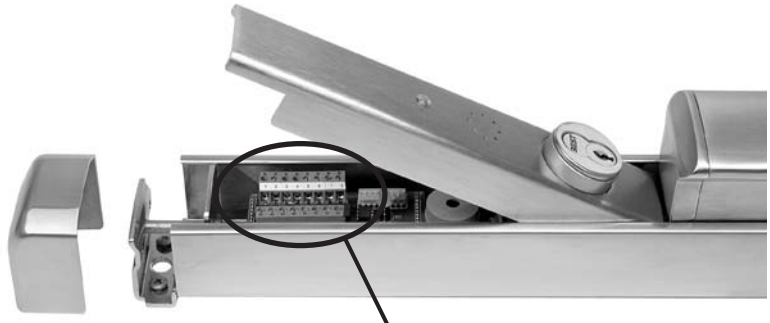

ACCESS COVER FEATURE - The Delayed Egress Control Board can be accessed through a hinge stile cover for ease of installation and maintenance without removing the device or Endcap Mounting Bracket. The access cover is secured in place by the device Endcap, which is attached with Security Screws.

Function	Desc.	Terminals		Desc.	Function
-24	GND	1	9	N/C	Normally Closed
+24	+24VDC	2	10	N/O	Normally Open
Fire Alarm	FA	3	11	COM	Common
Fire Alarm		4	12	N/C	Normally Closed
Communication Link	COM	5	13	N/O	Normally Open
Communication Link		6	14	COM	Common
External Inhibit	EI	7	15	DS	Door Position Switch
External Inhibit		8	16		Door Position Switch

TERMINAL BLOCK - Terminal Block connections are provided for Input Power, Fire, Remote Authorized Egress, Remote Control, Momentary Egress, and Relay Contacts for audible / visual signaling devices. Terminal Blocks are easily accessible through Hinge Side Access Panel.

DELAYED EGRESS APPLICATION CHARTS

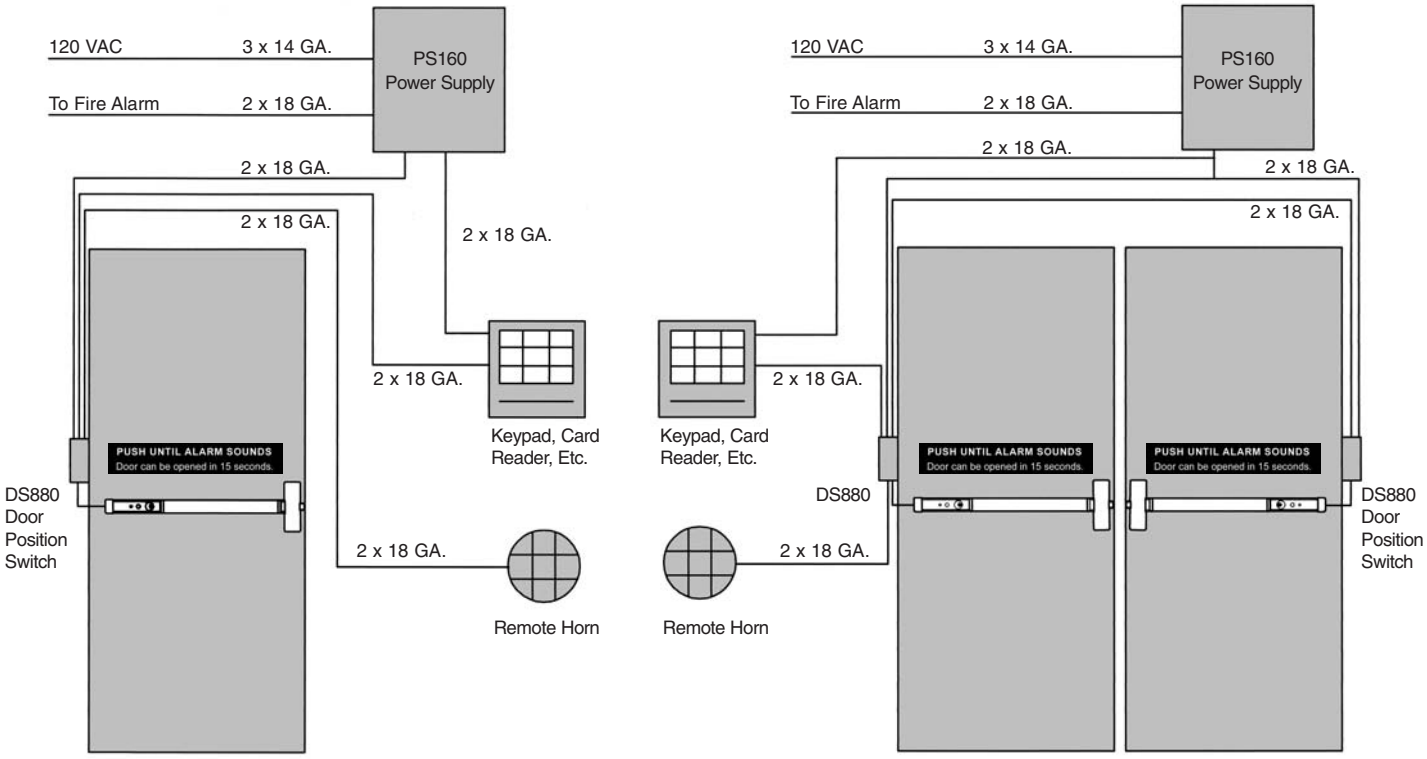

SINGLE DOOR - This application allows for remote Arm/Disarm and remote monitoring of the Delayed Egress. The Exit device will delay egress when armed and will be a normal exit device when disarmed. The DS880 (DS) Door Position Switch (page 29) prohibits the door from being held or forced open while the device is armed. The 24 VDC, remote switch, remote horn and the DS are routed through the power transfer and the fire alarm is wired to the power supply.

DOUBLE DOOR - This application allows for remote Arm/Disarm and remote monitoring of the Delayed Egress. The Exit device will delay egress when armed and will be a normal exit device when disarmed. The DS880 (DS) Door Position Switch (page 29) prohibits the door from being held or forced open while the device is armed. When one device is alarmed the other device will also go into alarm. The 24 VDC, remote switch, remote horn and the DS are routed through the power transfer and the fire alarm is wired to the power supply.

Exit Alarm

Available for all Apex Series Devices

ALK - Battery Operated, provided with a 9 Volt battery and has a audible low battery indicator. Specify WH495 Wire Harness for Remote Arm/Disarm or alternate Input Activation options.

ALW - Remote Powered 12 to 24 VDC at 0.25 Amp., a (2) wire power transfer is required, not furnished standard. Specify WH495 Wire Harness for External Wire features:
- External Arm/Disarm (On/Off)
- External Activation (to sound Alarm)

The Exit Alarm provides a simple way to audibly monitor the use of an exit device. The unit contains a Piezo Alarm which will sound when the touchbar is depressed. Alarm sounds at 80db at 10 feet.
It is also equipped with an LED indicator. The LED flashes GREEN for 20 seconds when the unit is arming and flashes RED every 20 seconds when the alarm is armed.

Note: Latch Bolt Monitoring (LS) or Door Position Switch (DS) is recommended when using Alarm option with 2200 Series Surface Vertical Rod devices.

CYLINDER

The Exit Alarm requires a standard 1-1/4 Mortise Cylinder (for cylinder details see page 19) which is used as a key switch to perform the following functions:
- To turn on (Arm) - it will allow 20 seconds to exit before alarm sounds.
- Silence and reset the alarm after unauthorized egress.
- To turn off (Disarm) the alarm for continuous unmonitored egress.
- Engage mechanical Dogging for Non-Fire Rated Devices.

WIRING HARNESS - WH495

Can be wired for one or both of the options listed below.
- Exit Alarm can be turned on (Armed) with alternate inputs. For other than our DS880 or NDS986 Door Position Switch a (2) wire power transfer hinge is required (furnished by others).
- Exit alarm can be turned on (Armed) or off (Disarmed) from a remote location. A Cylinder or Dummy Cylinder (by others) is required. Cylinders are not furnished standard. Specify when required (for cylinder details see page 19). A (2) wire power transfer is required, not furnished standard.

To Order: specify WH495

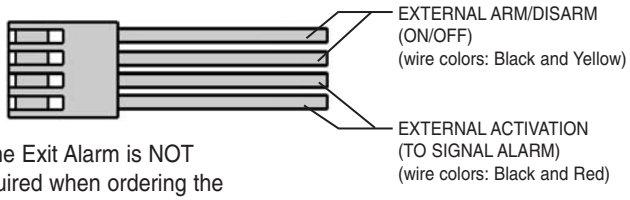

* The Exit Alarm is NOT required when ordering the (DE) Delayed Egress option.

Weatherized Exit Alarm

Available for all Apex Series Devices. The Weatherized Exit Alarm is identical in operation to the standard Exit Alarm but incorporates a weatherized design for use on a variety of applications where contact with the elements may occur.

WALW - Remote Powered 12 to 24 VDC at 0.25 Amp., a (2) wire power transfer is required, not furnished standard. Specify WH495 Wire Harness for Remote Arm/Disarm or alternate Input Activation options.

Weather resistant loss prevention hardware designed for use in outdoor or wet environments

- Meets the requirements of MIL-STD 810F, Method 506.4, Driving Rain Test (simulating 4 in./hr. rain with 40 mph wind)
- Meets the requirements of MIL-STD 810F, Method 509.4, Salt Fog test (simulating effects of corrosive environments similar to atmospheric conditions found in costal regions)

To Order:

Device with Weatherized Exit Alarm - add suffix "WALW" to Device No. (e.g. 2108WALW)

Exit Alarm Kit

Available for all Apex Devices from 3-0 to 4-0 wide doors. Furnished with Touchbar decal which states:

!! EMERGENCY EXIT ONLY !!
PUSH TO OPEN ALARM WILL SOUND

The Exit Alarm is available in Kits for Retrofit on existing devices. The channel fillers are different lengths for Narrow and Wide Stile devices. "N" denotes Narrow Stile devices.

To Order:

Device with Alarm - add suffix "ALK", "ALW" (e.g. 2108ALK)

Alarm Kits

Wide Stile Devices

2-6 & 3-0	ALK-3, ALW-3
4-0	ALK-4, ALW-4

Narrow Stile Devices

3-0	NALK-3, NALW-3
4-0	NALK-4, NALW-4

- WH495 Wiring Harness - Required for External Arming/ Disarming the Alarm and External Activation to sound the Alarm.
- Kits are available in finishes 605, 606, 612, 613, 625, 628, 630. For finish description see page 3.
- To order specify Kit No. and finish (e.g. ALK-3 626).

* For Battery operated kits a 9 Volt battery is included.

ELECTRIC DEVICES

E2103, E2203, E2703 and E2803 Electric Device

Available for 2100, 2200, 2700 and 2800 Series Devices. The Electric Device controls entry by remote locking or unlocking of the outside trim. In addition to a 24 VDC solenoid, the exit device is also equipped with a SPDT - single pole double throw switch. The switch monitors the outside trim (locked or unlocked).

The device is furnished standard as Fail Secure (FSE). When power is off the trim is locked. Power is applied to unlock the trim. May be field converted to the Fail Safe (FS) mode. (FS) - power is applied to lock the trim. Specify (FS) or (FSE) mode when ordering. Specify outside Trim with "08" function. The outside key cylinder retracts the latchbolt for mechanical override. If outside cylinder (mechanical override) is not required, specify outside trim with "14" function.

E2103K Electric Rim Device Kit

To convert 2103, FL2103 devices to E2103, FLE2103 devices in the field. The Kit includes Trim locking assembly and Electric "E" locking assembly.

Electrical Ratings:

Switch rated to 2 Amps at 24VDC SPDT
Solenoid current draw: 0.3 Amps.

To Order:

Device: specify prefix "E" (e.g. E2103 FSE 4908A)
Rim Device Kit: specify Kit No. (e.g. E2103K FSE)

Note: The exit device can be used as a conduit for wiring to the hinge side of the door.

E2303 Electric Mortise Device

The Electric Mortise Device controls entry by remote locking or unlocking of the outside trim. In addition to a 24 VDC solenoid, the mortise lock is also equipped with a SPDT - single pole double throw switch. The switch monitors the outside trim (locked or unlocked).

The device is furnished standard as Fail Secure (FSE). When power is off the trim is locked. Power is applied to unlock the trim. May be field converted to the Fail Safe (FS) mode. (FS) - power is applied to lock the trim. Specify (FS) or (FSE) mode when ordering. Specify outside Trim with "08" function. The outside key cylinder retracts the latchbolt for mechanical override. If outside cylinder (mechanical override) is not required, specify outside trim with "14" function.

Field Conversion

To convert 2303, FL2303 devices to E2303, FLE2303 devices in the field a Electric Mortise Lock is required. Specify EM303, EM303F, LSEM303 or LSEM303F (see below for Electric Mortise Locks).

Electrical Ratings:

Switch rated to 2 Amps at 24VDC SPDT
Solenoid current draw: 0.2 Amps.

To Order:

Device: specify prefix "E" (e.g. E2303 FSE M4908A)

Electric Mortise Lock – *Handed*

The Mortise lock is available with the following electrical options:

MODEL NO.	DESCRIPTION
• LSM303, LSM303F	- latchbolt monitoring, "03" Function
• LSM308, LSM308F	- latchbolt and trim locked or unlocked monitoring, "08" Function
• EM303, EM303F	- electric lock/unlock with switch to monitor the outside trim (locked or unlocked)
• LSEM303, LSEM303F	- electric lock/unlock with switches to monitor the outside trim (locked or unlocked) and to monitor the latchbolt.

Electrical Ratings:

Switch rated to 2 Amps at 24VDC SPDT
Solenoid current draw: 0.2 Amps.

Mortise Lock is furnished standard as Fail Secure (FSE). When power is off the trim is locked. Power is applied to unlock the trim. May be field converted to the Fail Safe (FS) mode. (FS) - power is applied to lock the trim.

To Order: Specify EM303 x (FSE) or (FS) x handing x finish (e.g. EM303 FSE RHRB 630).

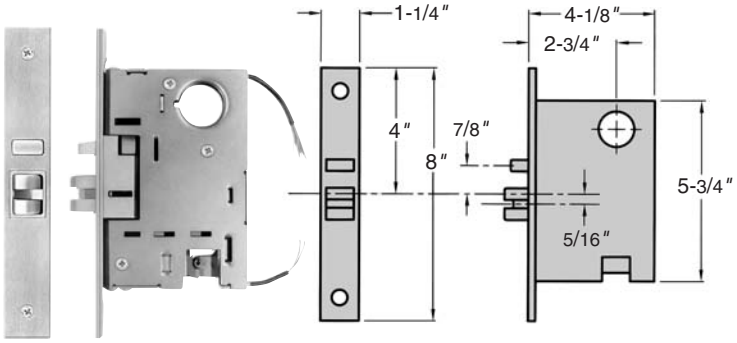

Wiring Diagram

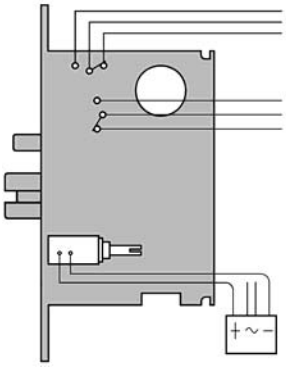

LATCHBOLT MONITORING
NORMALLY OPEN /
NORMALLY CLOSED SWITCH

LOCK / UNLOCK MONITORING
NORMALLY OPEN /
NORMALLY CLOSED SWITCH

BRIDGE RECTIFIER RECF1000
OPTIONAL - REQUIRED IF POWERED BY AC. AVAILABLE IN 24V VERSION.
(specify RECF1000 when ordering)

Touchbar Monitoring

Available for all Apex Series Devices. The Touchbar Monitoring Switch is an internally mounted switch that is used to signal electromagnetic locks, horns, monitoring stations or other electronic components.

- UL Listed for Panic and Fire for Class II Circuitry.
- TS and TDS can be used in combination with all Apex options including ELR Devices.

TS (SPDT - Single Pole, Double Throw) version allows for interface with one external component. A (2) wire power transfer is required, not furnished standard.

TDS (DPDT - Double Pole, Double Throw) version allows for inter face with two external components. A (4) wire power transfer is required, not furnished standard.

To Order: specify prefix TS or TDS (e.g. TS2108)

Touchbar Monitoring Conversion Kit

TS and TDS options are available as kits, specify TSK309 for Single Switch Monitoring or TDSK310 for Double Switch Monitoring.

Electrical Ratings:
TS: Switch rated to 2 Amps at 24VDC SPDT
TDS: Switch rated to 2 Amps at 24VDC DPDT

Weatherized Touchbar Monitoring

Available for all Apex Series Devices. Weatherized Touchbar Switch WTS/WTDS is designed for use on a variety of exit device applications where contact with the elements may occur. Provided with the same specifications as the standard Touchbar monitoring.

- Meets the requirements of MIL-STD 810F, Method 506.4, Driving Rain Test (simulating 4 in./hr. rain with 40 mph wind)
- Meets the requirements of MIL-STD 810F, Method 509.4, Salt Fog test (simulating effects of corrosive environments similar to atmospheric conditions found in costal regions)

To Order: specify prefix WTS or WTDS (e.g. WTS2108)

Door Position Monitoring Switch

A Magnetic Reed type switch used to monitor the position of a door from a remote location. It is mounted in the Touchbar Endcap and Door Frame.

To Order: Wide Stile: specify DS880 and finish.
Narrow Stile: specify NDS986 and finish.

Electrical Ratings: 1.5 Amps at 24VDC SPDT

Latchbolt Monitoring

Available for Wide Stile Rim, Mortise and Vertical Rod Devices. The Latchbolt Monitoring Switch is an internally mounted switch that monitors the position of the latchbolt. The switch can be used to signal a monitoring station or an alarm such as a Precision ALK/ALW Exit Alarm. For the security of the opening a Door Position Monitoring Switch is recommended.

- UL Listed for Panic and Fire for Class II Circuitry.
- LS and LDS can be used in combination with all Apex options including ELR Devices.

LS (SPDT - Single Pole, Double Throw) version allows for interface with one external component. A (2) wire power transfer is required, not furnished standard.

LDS (DPDT - Double Pole, Double Throw) version allows for inter face with two external components. A (4) wire power transfer is required, not furnished standard.

To Order: specify prefix LS or LDS (e.g. LS2108)

Latchbolt Monitoring Conversion Kit
LS or LDS option is available as a kit for Wide Stile Devices, specify LSRK298 or LDSRK299 for Rim Devices or LSVK910 for Vertical Rod Devices. For Mortise Devices see Electric Mortise Lock, page 28.

Electrical Ratings:
LS: Switch rated to 2 Amps at 24VDC SPDT
LDS: Switch rated to 2 Amps at 24VDC DPDT

Power Transfer

EPT-5 Power Transfer with steel housing and flexible tube. Secure and inconspicuous channel to bring power from the frame to the door. Narrow, shallow channel easily mortises into door edges. Accepts up to 5/16″ diameter wire bundle. Accommodates doors that swing open 120 degrees. Unit is concealed when the door is closed. Suitable for wood, aluminum or steel applications.

Finish: Bright Chrome. Will hold up to (10) 22 gauge Teflon coated wires.

To Order: specify EPT-5.

EPT-2 Armored flex conduit. Accepts up to 1/4 diameter wire bundle. Eighteen inches long.

To Order: specify EPT-2.

STRIKES

Rim Exit Devices

For Minimum Stile Widths see pages 32 and 33.

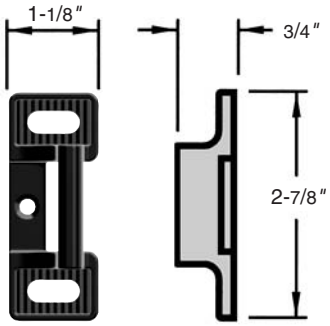

S300 Standard
For Rim and Top Strike for SVR Devices. Specify for FL2400 Devices on Pair of Doors with Mullion. Black Powder Coated Investment Cast Stainless Steel.

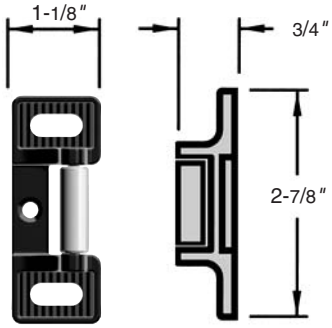

S301 Optional
For Rim and Top Strike for SVR Devices. Black Powder Coated Investment Cast, Stainless Steel Base and Roller.

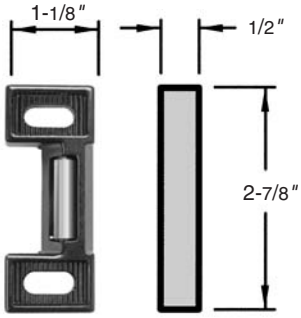

S458 Optional
For Rim Devices. Black Powder Coated Investment Cast, Stainless Steel Base and Roller.

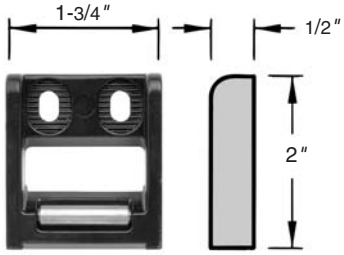

S988 Standard
For Narrow Stile Rim Devices. Black Powder Coated Investment Cast, Stainless Steel Base and Roller. Includes Rub Strip.

Vertical Rod Exit Devices

Top Strike - For Surface Vertical Rod Devices, S300 standard and S301 optional, see above.

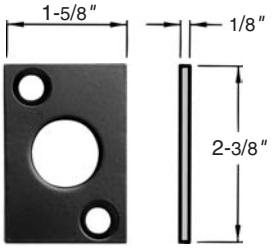

S460 Bottom Strike
For Vertical Rod Devices, Surface or Concealed. Black Powder Coated Steel.

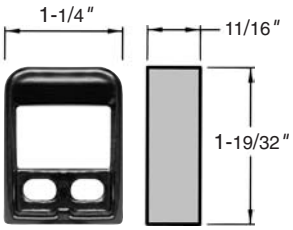

S519 Top Strike
For Concealed Vertical Rod Devices. Black Powder Coated Investment Cast Stainless Steel.

2100 Rim x Vertical Rod Exit Device

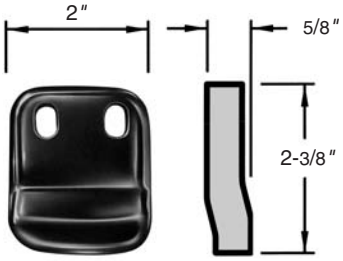

S459 Optional Rim Strike
For Non Fire Rated 2100 Rim x Vertical Rod Device on a Pair of Doors without a Mullion. Black Powder Coated Investment Cast Stainless Steel.

Mortise Exit Devices

Open Back Strikes allow a pair of doors to open and close independently. Strikes are handed. Specify Hand same as Mortise Lock (e.g. RHRB).

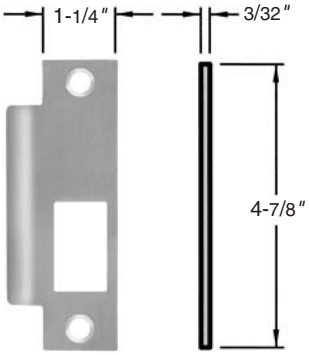

S982 Standard
Curved lip.

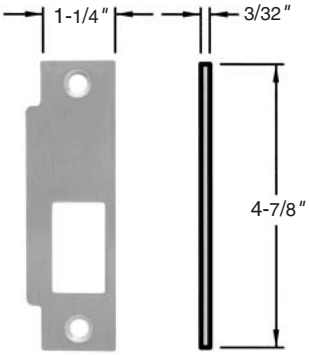

S983 Optional
7/8″ Flat Lip to center. For overlapping astragal.

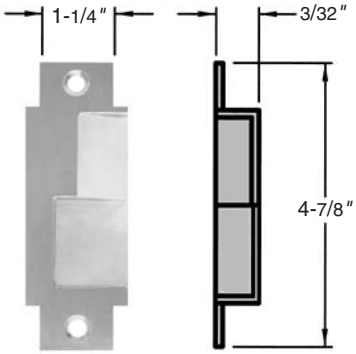

S984 Optional
Open Back Strike
For 4-7/8″ x 1-1/4″ door edge cutout.

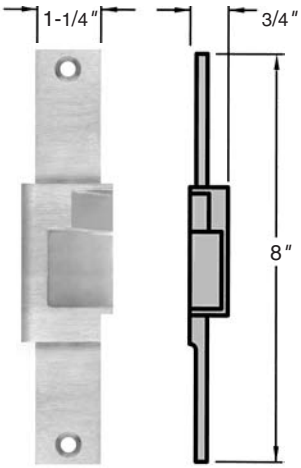

S985 Optional
Open Back Strike
For 8″ x 1-1/4″ door edge cutout.

Dummy Touchbar

Rigid Dummy Touchbar - Touchbar is rigid. For push/pull operation specify Dummy Trim (02 function), see page 5 for Wide Stile and page 11 for Narrow Stile Trims.

	3-0 Door	4-0 Door
Wide Stile:	671DR-3	671DR-4
Narrow Stile:	N673DR-3	N673DR-4

Active Dummy Touchbar with Microswitch - Has an internally mounted switch that is used to signal electromagnetic locks, horns, monitoring stations or other electronic components. For push/pull operation specify Dummy Trim (02 function), see page 5 for Wide Stile and page 11 for Narrow Stile Trims. Available with CD, ALK, ALW, TDS, DS and NDS options.

	3-0 Door	4-0 Door
Wide Stile:	TS672DA-3	TS672DA-4
Narrow Stile:	TSN674DA-3	TSN674DA-4

To Order: specify Device No. x finish (e.g. 672DA-3 x 630)

Shim Kit – *for Narrow Stile Devices*

NSMK995 used to accommodate doors with raised glass moldings. The kit consists of one 1/8″ thick shim for the Chassis and one 1/8″ thick shim for the End Cap Bracket Assembly.
To Order: Specify NSMK995 (e.g. 2400 NSMK995)

Wide Stile Devices are designed with a 1/4″ gap (see page 2) between the back of the touchbar and the door and do not require shims. If more than 1/4″ space is needed behind the device specify Shim Kit SMK994.

Braille Touchbar

Embossed Touchbar with the message "CAUTION STAIRWELL" in raised letters and Braille provides assistance to persons with impaired vision. Letters are 5/8″ high and Braille is Grade 2, ADA compliant.

To Order: specify suffix "BRL" (e.g. 2103BRL)

Miscellaneous

End Cap
EC992 - Wide Stile
NEC993 - Narrow Stile
For Hinge Stile end of all devices. Specify finish.

Mounting Bracket
MB305 - Wide Stile
NMB591 - Narrow Stile

To mount the device to the door on the Hinge Stile side.

Dogging Key
DK220 - 7/32 standard hex.

Rod Guide
RG124 - For Surface Vertical Rod Devices. Specify finish.

Top Rod - 2200 and FL2200 Series.
Three stock lengths available for 7′-0″, 8′-0″, and 10′-0″ high doors.

TR1854 - For 7′-0″ doors, rod is 36″ long.

TR1855 - For 8′-0″ doors, rod is 48″ long.

TR1857 - For 10′-0″ doors, rod is 72″ long.

For doors of lesser height rods must be field cut. Specify finish (see page 3 for Finish Descriptions).

Bottom Rod - 2200 and FL2200 Series.

BR1859 - For Touchbar location at 39-15/16″ from finished floor, rod is 32-5/16″ long. Specify finish (see page 3 for finish Descriptions).

Transom Bracket - 2200 Series.

TMB453 - To mount the top strike in the flush transom application. Prepped for S300 Strike.

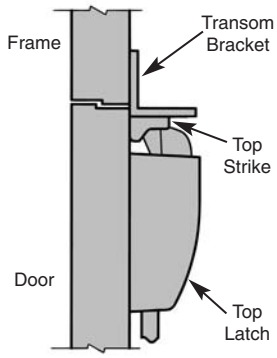

MINIMUM STILE WIDTH

Single Doors

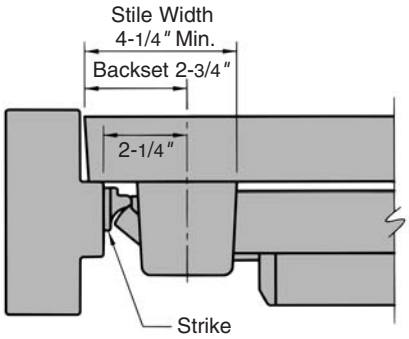

Rim Device with S300 or S301 Strikes

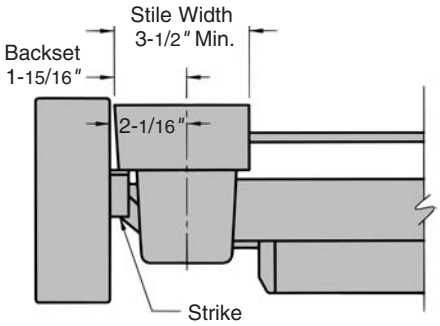

Rim Device with S988 Strikes
For 3-1/2″ medium stile Aluminum doors and frames. Consult factory.

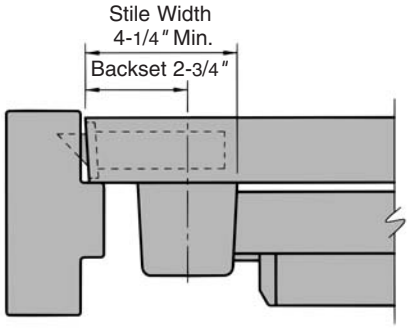

Mortise Device

Pair of Doors

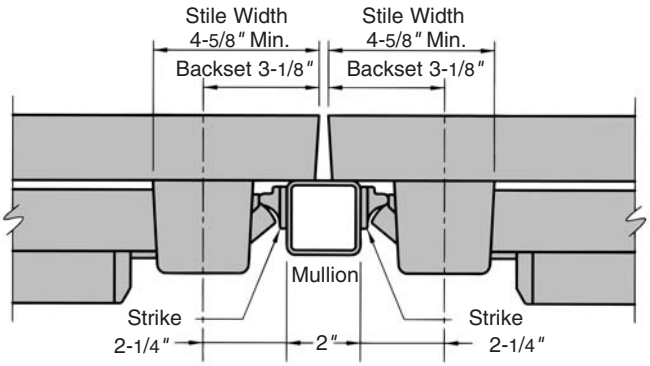

Rim Devices with S300 or S301 Strikes and Mullion

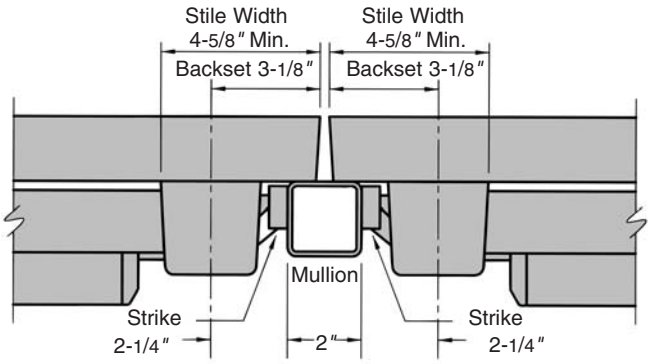

Rim Devices with S458 Strikes and Mullion

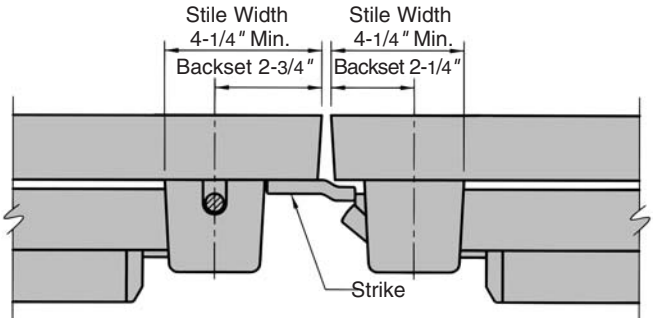

Rim Device and Vertical Rod Device with S459 Strike

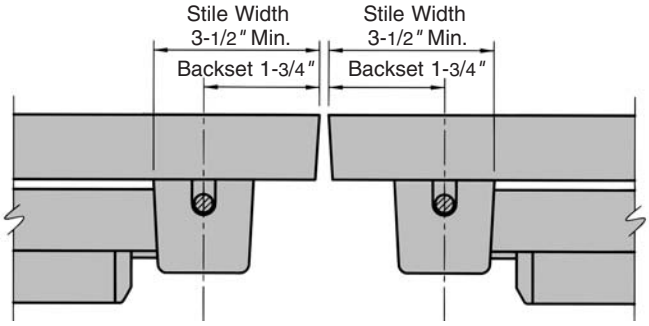

Two Vertical Rod Devices Surface or Concealed
For 3-1/2″ medium stile doors consult factory.

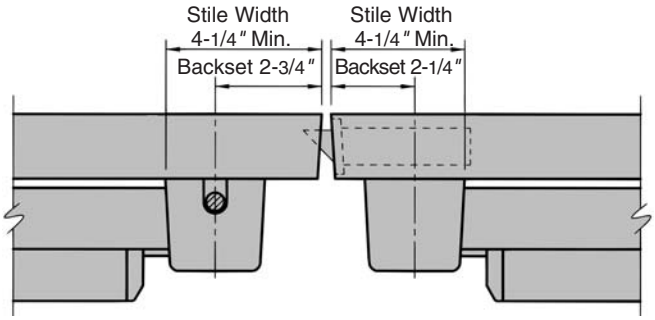

Mortise and Vertical Rod Device Surface or Concealed

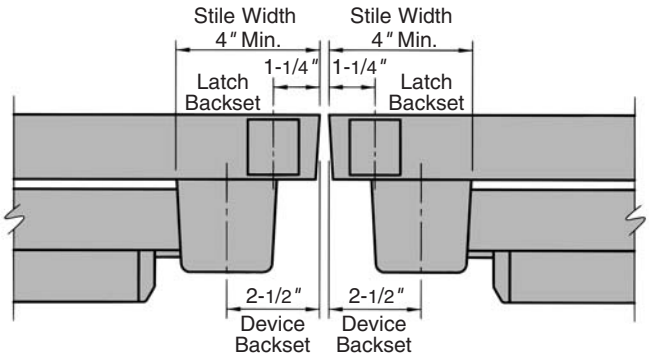

Wood Door Concealed Vertical Rod Devices

Single Doors — Rim Devices

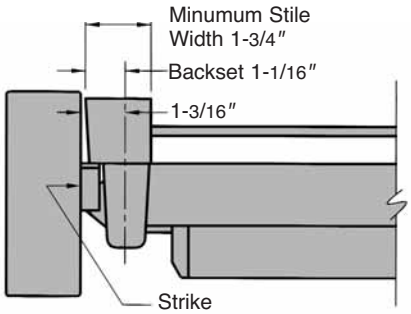

Rim Device with S988 Strike

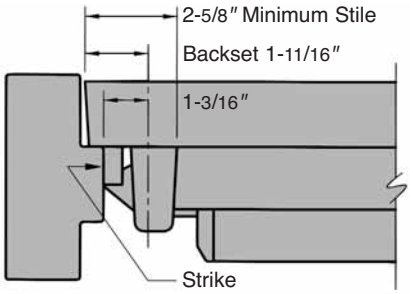

Rim Device with S458 Strike.

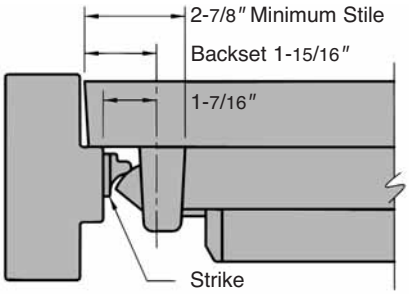

Rim Device with S300 or S301 Strikes

Pair of Doors, Rim Devices

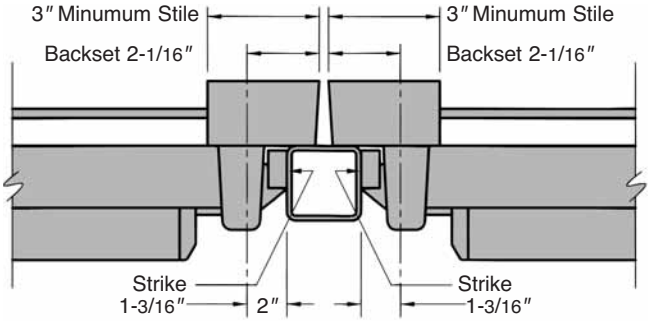

Rim Devices with S458 Strikes and Mullion

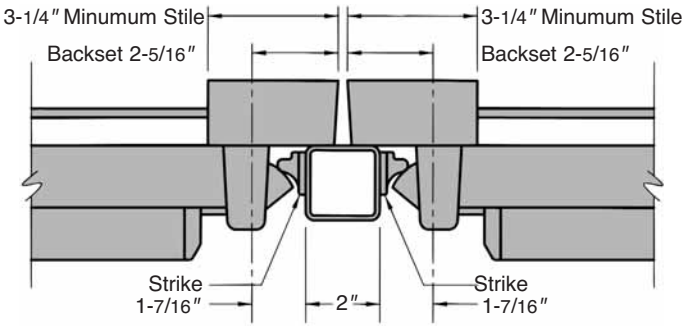

Rim Devices with S300 or S301 Strikes and Mullion

Concealed Vertical Rod Devices

Single Door

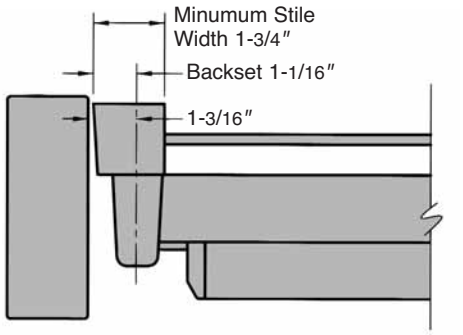

Pair of Doors

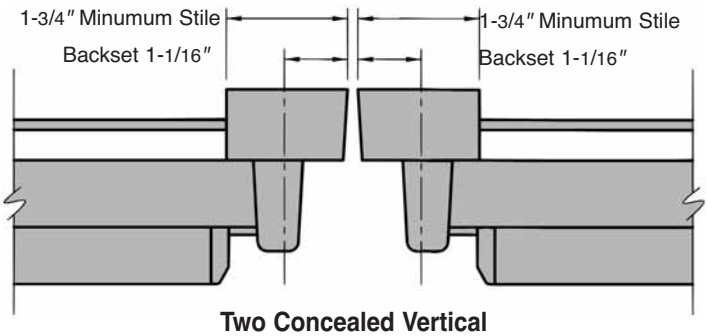

Two Concealed Vertical Rod Devices

Device Dimensions

Wide Stile Devices

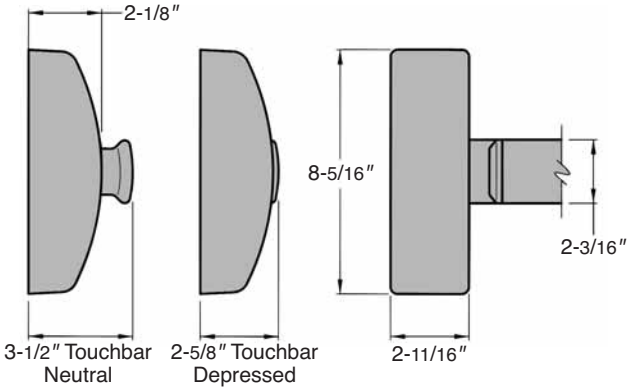

Narrow Stile Devices

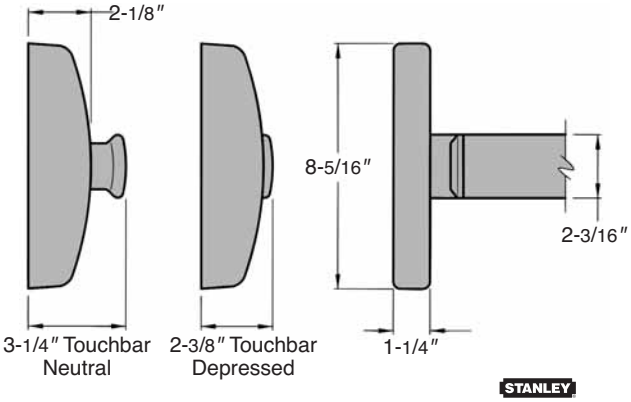

TRIM DIMENSIONS

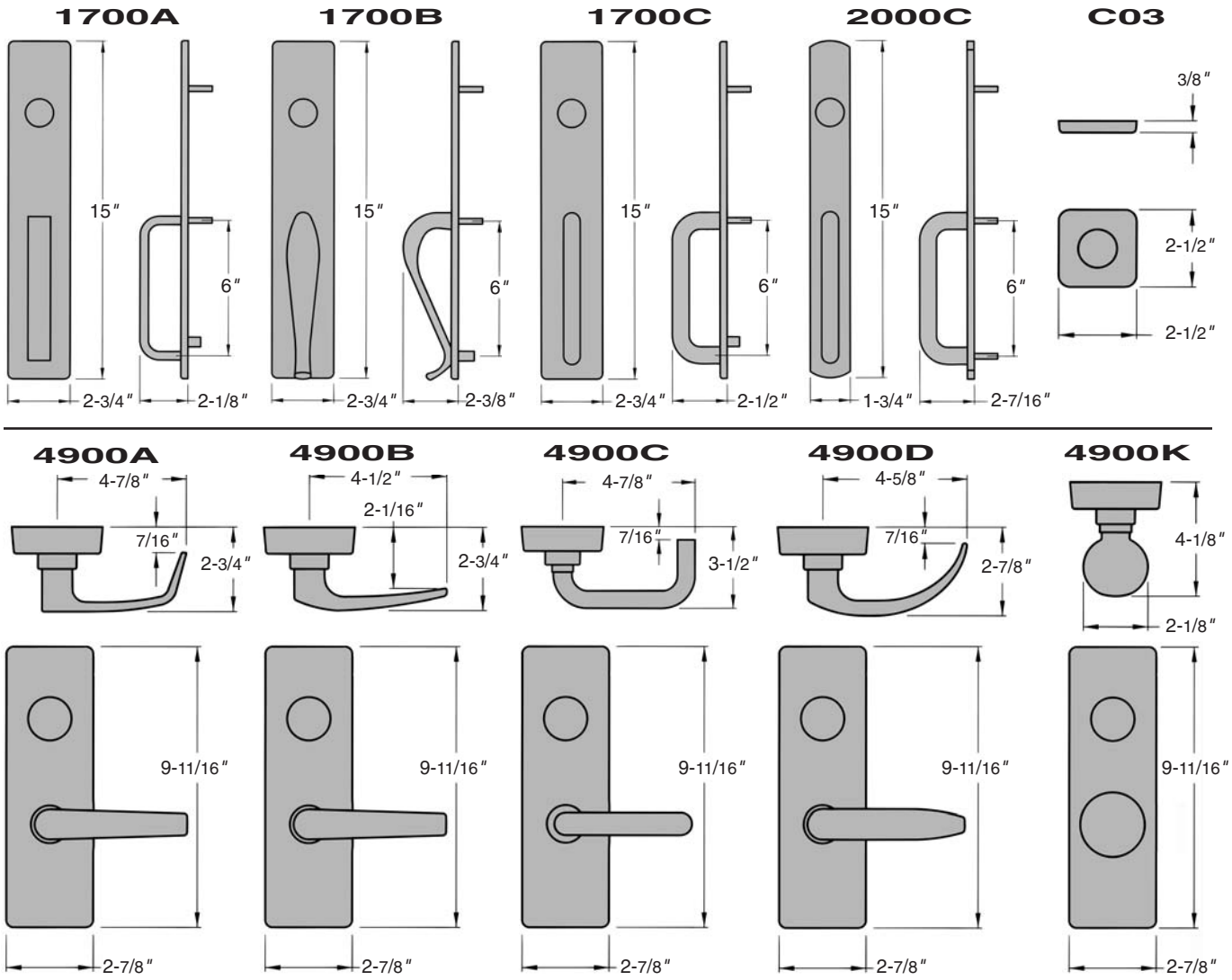

Lever Centerline 38-3/16″ from Finish Floor when Device Centerline is 39-15/16″.

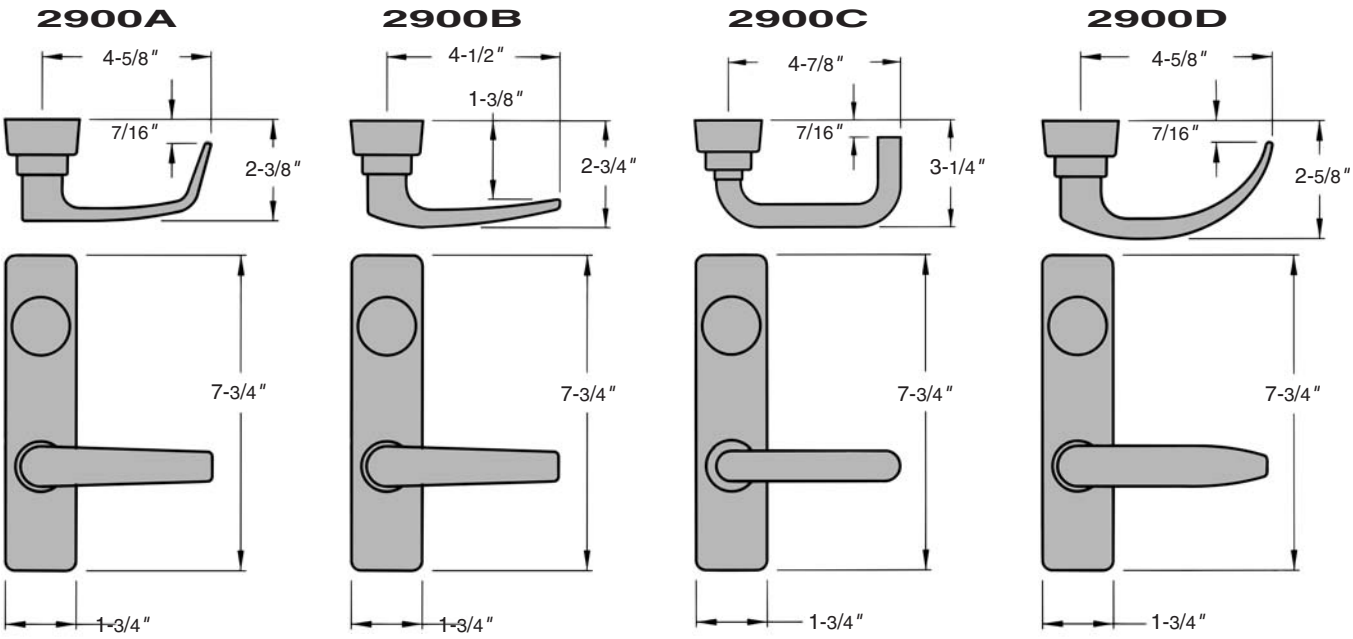

Lever Centerline 38-3/16″ from Finish Floor when Device Centerline is 39-15/16″.

FIRE LABEL RATING

Type and Application	Door Opening	Exit Device Series	UL Fire Door Rating (A) 3 Hour	(B) 1-1/2 Hour	(C) 3/4 Hour	(D) 1-1/2 Hour	(E) 3/4 Hour	20 min. Door
SINGLE DOOR								
Rim Device	4'-0"W x 10'-0"H	FL2100, FL21	•	•	•	•	•	•
Narrow Rim Devices	4'-0"W x 10'-0"H	FL2400	•	•	•	•	•	•
Mortise Device	4'-0"W x 10'-0"H	FL2300	•	•	•	•	•	•
PAIR OF DOORS								
Two Rim Devices with Mullion	8'-0"W x 8'-0"H	FL2100, FL21 x FL822, FLKR822	•	•	•	•	•	•
Two Narrow Rim Devices with Mullion	8'-0"W x 8'-0"H	FL2400 x FL822, FLKR822	•	•	•	•	•	•
Two Surface Vertical Rod Devices Swinging in the Same or Opposite Direction	8'-0"W x 10'-0"H	FL2200, FL2200LBR, FL22, FL22LBR	•	•	•	•	•	•
Mortise Lock Device x Surface Vertical Rod Device	8'-0"W x 10'-0"H	FL2300 x FL2200, FL2200LBR, FL22, FL22LBR	•	•	•	•	•	•
Mortise Lock Device x Concealed Vertical Rod Device	8'-0"W x 10'-0"H	FL2300 x FL2800, FL2800LBR	•	•	•	•	•	•
Two Narrow Concealed Vertical Rod Devices Swinging in the Same orOpposite Direction	8'-0"W x 10'-0"H	FL2600, FL2600LBR	•	•	•	•	•	•
Two Concealed Vertical Rod Devices Swinging in the Same or Opposite Direction	8'-0"W x 10'-0"H	FL2800, FL2800LBR	•	•	•	•	•	•
Wood Doors Swinging in the Same Direction								
Mortise Lock Device Wood Door Concealed Vertical Rod Device	8'-0"W x 8'-0"H	FL2300 x FL2700	•	•	•	•	•	•
Mortise Lock Device Wood Door Concealed Vertical Less BottomRod Device	8'-0"W x 8'-0"H	FL2300 x FL2700LBR	•	•	•	•	•	•
Wood Doors Swinging in the Same or Opposite Direction								
Two Wood Door Concealed Vertical Rod Devices	8'-0"W x 8'-0"H	FL2700	•	•	•	•	•	•
Two Wood Door Concealed Vertical Less Bottom Rod Devices	8'-0"W x 8'-0"H	FL2700LBR	•	•	•	•	•	•

All Fire Exit Hardware conforms to UL10C and UBC 7-2.

Consult with Door Manufacturer for specific limitations on Fire Door Assemblies.

PRECISION HARDWARE

For more information on Stanley Security Solutions' products, services, and office locations visit our web site at www.stanleysecuritysolutions.com

Product information contained in this catalog has been compiled and presented with as much care and completeness as is reasonably possible. Errors or mistakes may be present, and in many cases, reliance has been placed on information supplied by other manufacturers which may be in error or which may be subject to changes or modifications by the manufacturer without notice and without obligation. Therefore, no guarantee can be made or should be assumed or implied with regards to product information contained in this catalog.

STANLEY®

Security Solutions

Stanley Security Solutions, Inc.
6161 E. 75th Street Indianapolis, Indiana 46250
www.stanleysecuritysolutions.com
© 2007 Stanley Security Solutions, Inc. and Stanley Logistics

10M R1207FP
PHI005