STANLEY®
Security Solutions

PRECISION HARDWARE

LOW ENERGY OPERATOR

D-4990

STANLEY
phi™

TABLE OF CONTENTS

	Page
Introduction	2
ADA "Blue-Paint" Access	2
Features/Benefits	3
Electrical Data Specifications	4
How To Order	4
Standard Applications	5
Typical Applications	6, 7
Architectural Specifications	8
Technical Details	9, 10
Accessories	11

INTRODUCTION

ADA Access

Stanley Security Solutions is pleased to offer its latest product line designed to maximize public door accessibility for Americans with Disabilities Act (ADA) Title III applications. The D-4990 Low Energy Operator offers Stanley's newest and most convenient features to gain safe access for ADA applications.

ADA is a civil rights law that is intended to guarantee equality for those who are physically handicapped or disabled. There are four major sections of the bill and they are intended to prohibit discrimination in Employment, Public Service, Public Accommodations, and Telecommunications. Stanley Security Solutions' focus is on Title III (Public Accommodations). Title III is not a product specification or a building code, but a directive to ensure equality in accessibility within public buildings. Such things as door opening size, door opening force requirements, door closing time, degree of door opening, and door and lock handle designs must all be addressed to satisfy the ADA guidelines.

D-4990 Low Energy Operator (Non-handed)

ADA "BLUE-PAINT" ACCESS

From the moment a physically disabled person enters the facility parking lot, they immediately begin looking for the ADA "blue-paint" and signage. All subsequent entry decisions are based on following the "blue-paint" pathways designed to provide access.

ADA "Blue-Paint" Access

ADA Door Opening Access

After parking, attention quickly turns to locating a barrier-free ramp leading to the entry way and door actuator. Although the Stanley D-4990 Low Energy Operator can be useful on a variety of locations, the ADA "blue-paint" clearly defines a need for assisted ingress/egress.

ADA Push Plates

Barrier-Free Access

Access Controls: The D-4990 Low Energy Operator may be used with electric latch retraction exit devices, electric strikes, and other electric locking systems. A time delay function is built into the control system eliminating the need for supplemental relays or controls.

Activation: The D-4990 Low Energy Operator can be activated with the press of a switch. Virtually any form of "knowing act" can be used to initiate the operator making integration with existing systems easier. For the full line of activation devices that Precision hardware offers see page 10.

Push and Go Option: With the flip of a switch, the D-4990 Low Energy Operator can be configured to activate and open based on a slight movement of the door. Utilizing this option eliminates the need for supplemental activation devices but does not preclude their use.

Hold-Open Timer: Upon receipt of an activation signal, the operator will power open the door from the closed position. The door may be held in the open position up to 28 seconds (compliance with ANSI/BHMA A156.19 requires the door to remain in the open position for a 5 second minimum). Additionally, a "hold-open" switch is provided to hold the door open for extended periods.

External Function Switches: The D-4990 Low Energy Operator is equipped with external function switches providing basic controls.

- **Illuminated Power Switch:** Illuminated to be visible at night, the switch controls power to the operator motor. The D-4990 Low Energy Operator functions as a manual closer with power off.
- **Mode Control Switch:** A three function switch is provided for control of the powered function of the operator. "Day" mode will engage the operator for normal powered operation with activation by push plate, "Push and Go", or signal from other "knowing act" device. "Night" mode disables the operator for normal powered operation; however, the operator can be configured to receive activation signals from a secure activation device such as a card reader for secure activation, generally from one side. Switching to "Hold-Open" mode will power the operator opening the door, holding it open indefinitely.

Obstruction Detection: During the opening cycle an obstruction function effectively reduces the possibility of personal injury in accordance with A156.19. Additionally this feature prevents damage to door and/or surrounding structures. After a stall time-out, the door will close at a rate and force set by the integrated hydraulic closer.

Power-Close Option: This switched feature can be used to control exterior openings that require additional closing force to resist interior stack pressures and wind conditions that do not allow the door to close properly. Use this feature to reduce heating and cooling loss and save energy and money.

D-4990 Door Closer:

- **Adjustment:** The D-4990 Low Energy Operator (which incorporates the Heavy Duty D-4550 Stanley Door Closer) provides the industry's widest range of field adjustable spring power settings. This allows you to adjust the operator for the correct opening and closing forces to meet any specific application. The closer within the D-4990 Low Energy Operator also incorporates multiple regulating valves, including the V-Slotted Valve Regulation, which maximizes fine tune adjustment capabilities.
- **Door Closer Body:** The incorporated D-4550 Stanley Door Closer body is constructed of R-14 Aluminum Alloy providing wear resistance from contact with the piston during the opening and closing. In addition the R-14 Aluminum Alloy body holds the Cylinder Body dimensionally stable under extreme internal hydraulic pressures.

Internal Cycle Counter: The D-4990 Low Energy Operator comes equipped with two independent internal cycle counters. The cycle counters provide current data on manual and powered operations.

Vestibule Function: Each D-4990 Low Energy Operator is equipped with a vestibule function control. This field selectable function provides electronic sequencing to control the opening of doors within a vestibule application. Sequencing reduces exposure to the exterior elements. Controlling the opening sequence of a paired vestibule, provides convenience and saves energy to the facility.

Optional Power Supply: The optional PS-490 24VDC @ 0.5A power supply is available to provide power to auxiliary electrified hardware such as electric strikes. This optional power supply can be mounted within the D-4990 Low Energy Operator housing.

ELECTRICAL DATA SPECIFICATIONS

- Power input: 115 VAC ±15% 60 Hz
- Current draw: 2A maximum
- Auxiliary output: 24VAC @ 0.125A maximum
- Solid state output can signal electric strikes
  (For powering strikes see page 7.)

Certifications

- ANSI/BHMA A156.19 certified Standard For Power Assist And Low Energy Power Operated Doors
- UL 325 Standard for Door, Drapery, Gate, Louver, and Window Operators and Systems or use on fire and smoke check doors
- UL 228 Standard for Door Closers-Holders, With or Without Integral Smoke Detectors
- Meets requirements for UL 10B, 10C and UBC 7.2 for positive pressure
- Meets ADA – Americans With Disabilities Act
- Complies with ANSI 117.1 section 4.13
- In compliance with FCC 47 CFR Part 15 Class B emissions requirements (USA)

Exterior Finishes

628 – satin aluminum, clear anodized
313AN – dark bronze anodized

Warranty

Two years from the date of invoice

Package Includes:

- D-4990 Low Energy Operator (Non-handed)
- Standard Arm (PUSH side) or Track Arm (PULL side)
- Mounting template
- Technical manual
- Door closer spring adjustment wrench
- Tuning screwdriver
- Signs (see page 11)

HOW TO ORDER D–4990/D–4990T

D-4990	628
Model No.	**Finishes**
D-4990 – standard arm (push side) **D-4990T** – track arm (pull side) page 5	**628** – satin aluminum, clear anodized **313AN** – dark bronze anodized For special finishes consult factory

CL2248
Accessories
CL2248 – push plate mounting post– silver **CL2247** – push plate mounting post– black **CL2249** – push plate mounting post– bronze **CL2216** – 6″ round push plate– stainless steel **CL4163** – 4 1/2″ square push plate– stainless steel **CL2055** – 1 1/2″ x 4 1/2″ jamb plate– stainless steel **CL2025** – touchless plate **CL4485** – radio control receiver **CL4490** – radio control transmitter **PS490** – power supply **314066** – signage kit **CL2212** – push plate package page 10 & 11

Example: D-4990 Low Energy Operator x 628 finish.
2-CL2216-6″ round push plates

D-4990 Standard Arm (PUSH Side)

- 6 5/8" (168mm) Maximum Reveal

D-4990 Push side

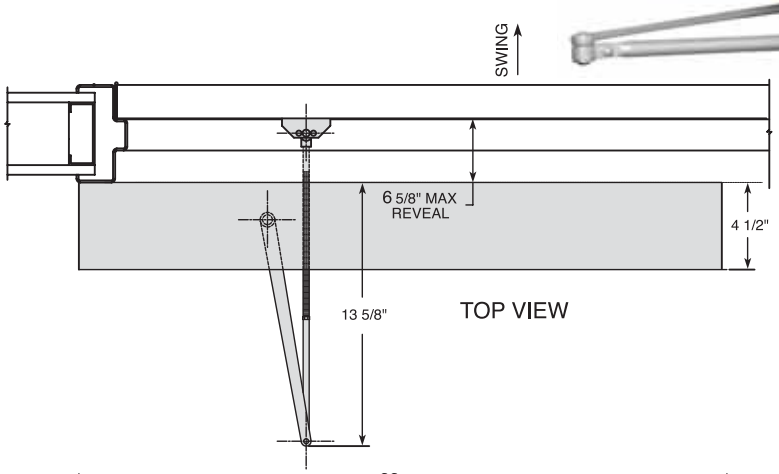

TOP VIEW

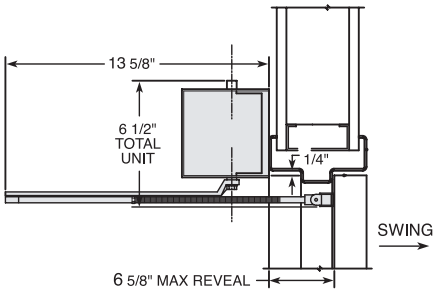

SECTION VIEW

Hollow Metal Door Shown

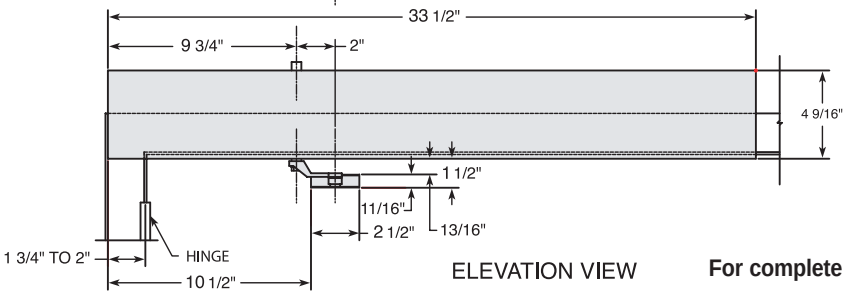

ELEVATION VIEW

For complete detailed drawings visit www.stanleytemplates.com

D-4990T Track Arm (PULL Side)

- 1/8" (3mm) Maximum Reveal

D-4990T Pull side

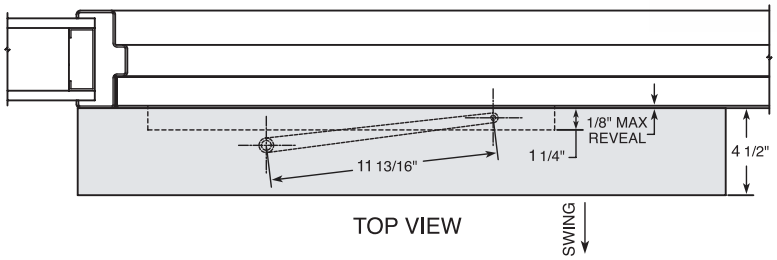

TOP VIEW

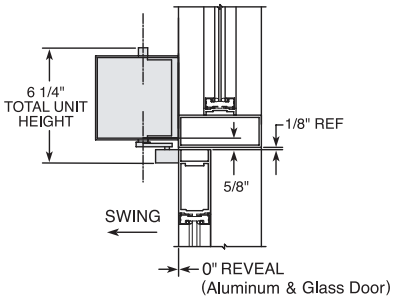

SECTION VIEW

Aluminum & Glass Door Shown

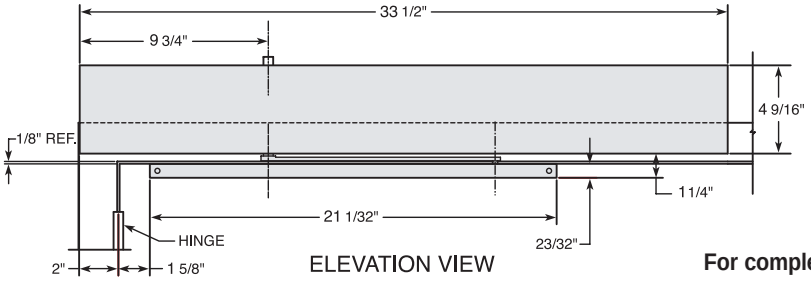

ELEVATION VIEW

For complete detailed drawings visit www.stanleytemplates.com

TYPICAL SYSTEM APPLICATIONS

D-4990 Low Energy Operator with PUSH–PULL

Operation:

- Free ingress & egress using low energy operator or bypassing the operator and using door manually
- Door operator acts as standard door closer when entering or exiting manually

Material:

- Precision Low Energy Operator
- 2 Precision Door Actuators or Push and Go
- Local Power

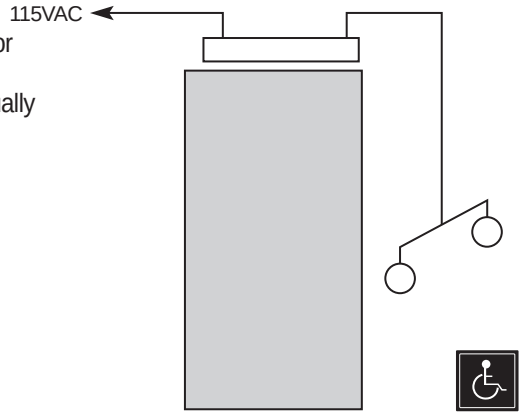

PUSH–PULL

D-4990 Low Energy Operator with Concealed Mag Lock for Glass Door Applications

Operation:

- Free entry when security system is shunted or off
- Entry after hours by card reader, which unlocks & activates low energy operator
- Free egress at all times by touching push bar or using inside actuator, which de-energizes mag lock and activates low energy operator

Material:

- Precision Low Energy Operator
- Electromagnetic Shear Lock and Power Supply (PS)
- Electrified Pivot
- Precision Touch Bar Sensor Kit (TBSK) PUSH–PULL Set
- Terminal Interface Enclosure (TIE)
- BEST Card Reader
- Precision Actuators

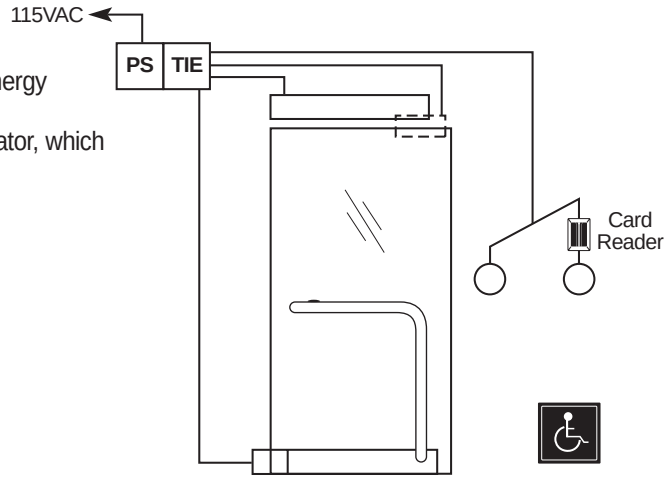

Magnetic Lock for Glass Door

D-4990 Low Energy Operator with Vestibule

Operation:

- When exit device is dogged low energy operator can be activated by external actuator
- When exit device is locked (Not Dogged) all actuators are disabled (Ex: After hours at a school or library)
- Recommended dual vestibule actuator will re-open internal or external doors (Ex: Student waiting for parent pick-up)

Material:

- 2 Precision Low Energy Operators
- 2 Precision Actuators (Internal, External)
- 1 CL2388 Precision Dual Vestibule Push Plate (Recommended)
- Optional Precision Interior Vestibule Actuator
- Precision Exit Device with Cylinder Dogging
- Stanley Power Transfer Hinge
- 1 Precision Exit Dummy Trim

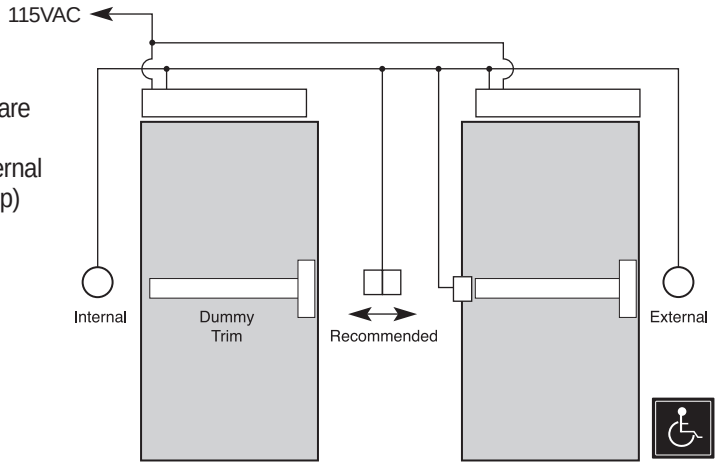

Vestibule

D-4990 Low Energy Operator with Electric Strikes

Operation:

- Doors are to be closed and latched (Example: Fire Doors)
- Key switch shunts exterior actuator (Example: After hours traffic control)
- When not shunted, actuators will signal electric strike power supply and activate auto operators
- From secure side, egress by manually pushing exit devices or using inside actuator to activate auto operators

Material:

- 2 Precision Vertical Rod Exit Devices
- Electric Strike & Precision PS490 Power Supply (PS)
- Key Switch
- 2 Precision Actuators
- 2 Precision Low Energy Operators

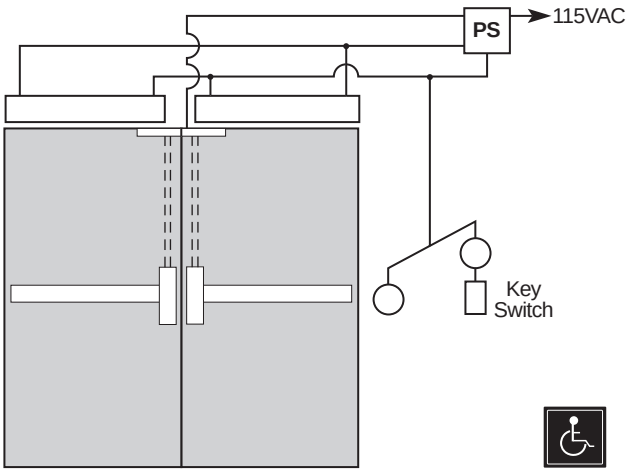

Electric Strikes

D-4990 Low Energy Operator with Latch Retraction

Operation:

- Doors are to be closed and latched at all times
- When activated, latch bolts are retracted and door(s) will automatically open
- Non-rated devices can be dogged for push/pull operation

Material:

- 2 Precision Low Energy Operators
- 1 Precision Power Supply
- 2 Stanley Electric Hinges
- 2 Precision Exit Devices with Electric Latch Retraction
- 2 Precision Actuators
- 1 CL2388 Precision Dual Vestibule Push Plate

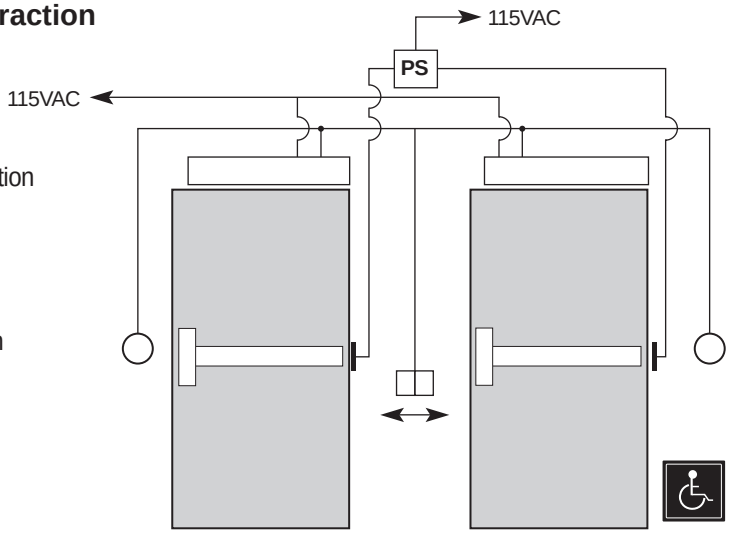

Latch Retraction

ARCHITECTURAL SPECIFICATIONS

Low Energy Operators shall:

1. Conform to ANSI/BHMA A156.19 as a low energy power opening device
2. Be listed under UL228, UL325, UL10B, UL10C, UBC 7.2 and FCC listed
3. Shall be non-handed and have operation range as follows:
   i. 90º powered, 180º manual [Push-side application, see page 5]
   ii. 90º powered, 120º manual [Push-side application, see page 5]
4. Be rated for door panels weighing up to 350 lbs (160 kg)
5. The manual door closer within the Low Energy Operator shall be adjustable to meet Americans with Disabilities Act (ADA) 5lbs opening force [Push-Side applications only]
6. Operator shall be isolated from mounting plate with rubber mounts to mitigate the transmission of forces between the door and the operator
7. Shall have a position encoder that communicates with a microprocessor controller
8. Incorporate a resetable powered operation counter that tracks both powered and non-powered cycling of the Operator
9. Incorporate the following adjustable settings:
   i. Hold Open Timer, to 28 seconds
   ii. Open Speed
   iii. Backcheck Speed
   iv. Vestibule Sequence Timer
10. Include DIP switch controls for:
    i. On board diagnostics
    ii. Power close
    iii. Push and Go operation
    iv. Time delay logic for electrified hardware components
11. Include terminals for auxiliary controls including:
    i. Activation devices; provide two discrete inputs
    ii. Vestibule sequencing
12. Control switches including:
    i. Day/Night open (illuminated)
    ii. Power On-Off
13. Includes adhesive Low Energy Operator mounting templates
14. R-14 Aluminum Alloy material
15. For non-powered operation, the unit shall function as a standard door closer with adjustable spring force size 1 thru 6.

TECHNICAL DETAILS

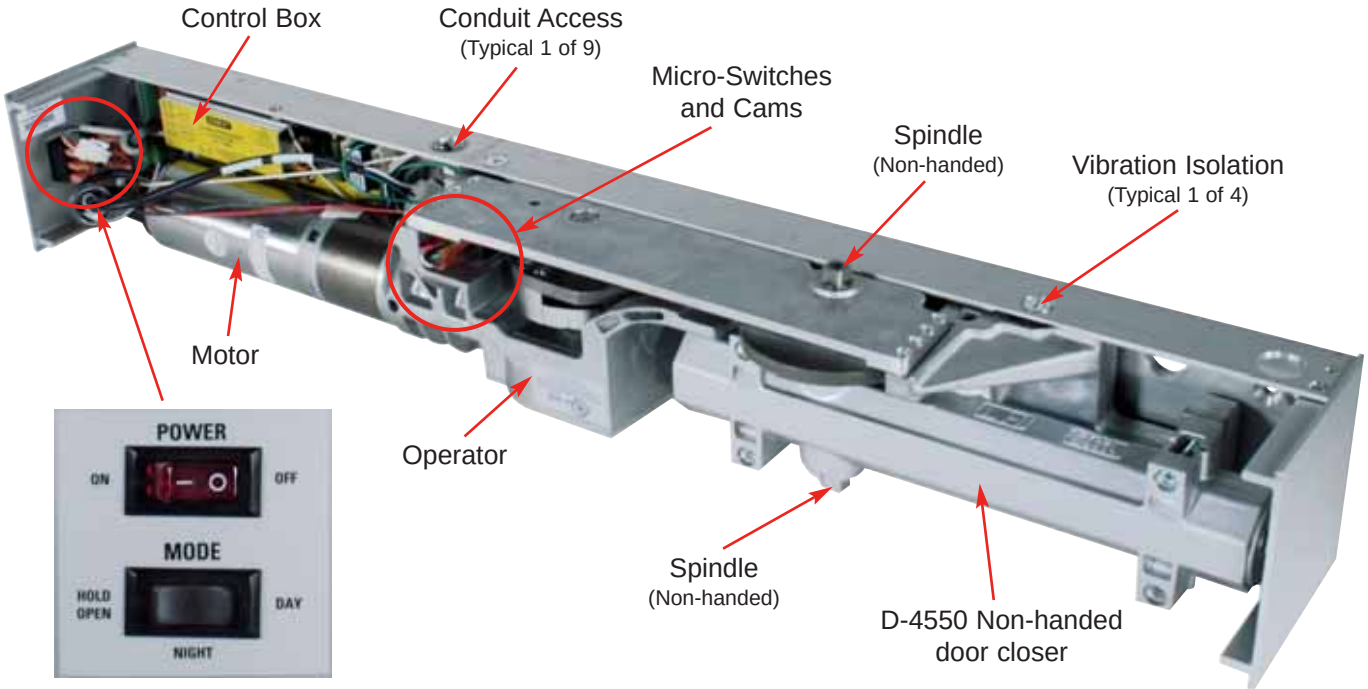

Close up of switch face
(shown on opposite side)

Switch Settings

Factory default settings for normal operation; all switches on the DIP switch are set to OFF.

SETTING	ON	OFF
1. Electric strike logic	fail secure	fail safe
2. Electric strike	enabled	disabled
3. PUSH side/PULL side	PUSH side	PULL side
4. PUSH and GO	enabled	disabled
5. Power close	enabled	disabled
6. N/A		
7. N/A		
8. N/A		

Controller

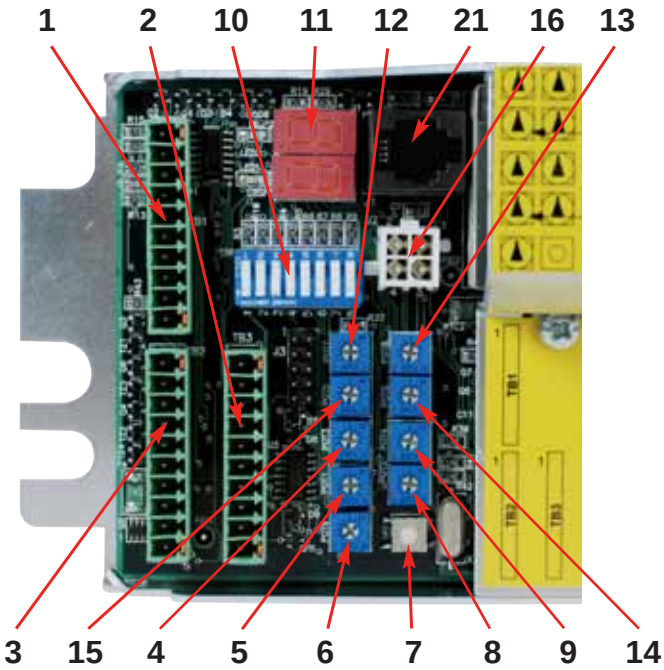

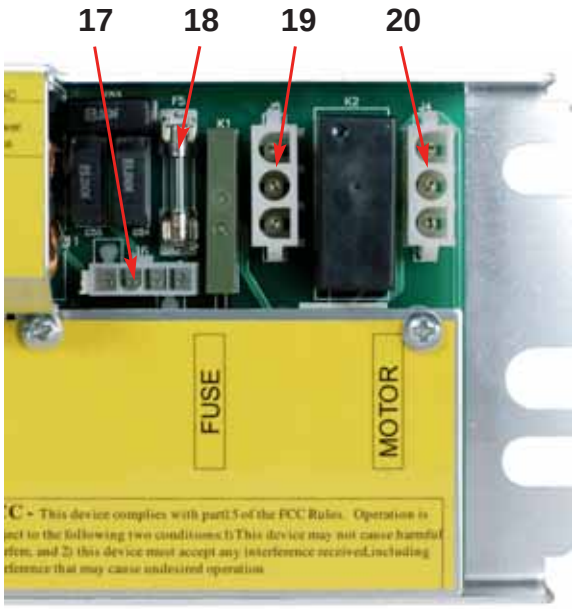

1- TB-1
2- TB-3
3- TB-2
4- Pot #3 not used
5- Pot #1 Hold open time 0-28 seconds. Must be a minimum of 5 seconds after door fully open
6- Pot #9 Vestibule time delay
7- Self test button
8- Pot #2 Full open position adjustment
9- Pot #4 Stall force
10- DIP switches (See chart above)
11- Digital readout
12- Pot #7 opening torque, only needs changed for use on heavier doors
13- Pot #8 not used
14- Pot #6 open sweep speed
15- Pot #5 open check speed
16- Encoder plug input
17- AC power in
18- Fuse
19- N/A
20- Motor socket
21- N/A

ACCESSORIES

Push Plate Posts

Mounting post for stainless steel push plates.

- CL2248: Silver mounting post
- CL2247: Black mounting post
- CL2249: Bronze mounting post

Post Size: 41 1/2″H x 6 1/4″W x 4 1/4″D.

Note: 4 1/2″ square or 6″ round plates sold separately. (see below)

Push Plate Post
(Black)

Activating Door Plates and Accessories

- CL2216: 6″ round stainless steel plate with accessibility logo and “Push To Open” text
- CL2220: 6″ surface mount box
- CL4163: 4 1/2″ square stainless steel plate with accessibility logo and “Push To Open” text
- CL4638: 4 1/2″ surface mount box
- CL2055: 1 1/2″ x 4 3/4″ Jamb stainless steel plate with accessibility logo and “Push To Open” text
- CL2245: 1 1/2″ x 4 3/4″ surface mount box
- CL2388: Dual vestibule push plate with text, accessibility logo and directional arrows
- CL2025: Touchless plate
- CL4490: Radio control transmitter (with 9V battery) (433 Mhz)
- CL4485: Radio control receiver (433 Mhz)
- CL2212: Push plate package – includes 2 push plates (round or square) 2 boxes (surface or flush mount) 2 transmitters, 1 receiver
- PS490: PS-490 Power supply 24VDC @ 0.5A

6″
Round Plate

4 1/2″
Square Plate

1 1/2″ x 4 3/4″
Jamb Plate

Dual Vestibule
Push Plate

6″
Surface Mount Box

4 1/2″
Surface Mount Box

1 1/2″ x 4 3/4″
Surface Mount Box

Touchless Plate

Transmitter

Receiver

Power Supply

Signs

- 314066 : kit contains 7 signs, supplied with D-4990 Low Energy Operator

1-supplied

1-supplied

2-supplied

2-supplied

1-supplied

PRECISION HARDWARE

For more information on Stanley Security Solutions' products, services, and office locations visit our web site at www.stanleysecuritysolutions.com

Product information contained in this catalog has been compiled and presented with as much care and completeness as is reasonably possible. Errors or mistakes may be present, and in many cases, reliance has been placed on information supplied by other manufacturers which may be in error or which may be subject to changes or modifications by the manufacturer without notice and without obligation. Therefore, no guarantee can be made or should be assumed or implied with regards to product information contained in this catalog.

STANLEY®

Security Solutions

Stanley Security Solutions, Inc.
6161 E. 75th Street Indianapolis, Indiana 46250
www.stanleysecuritysolutions.com
© 2008 Stanley Security Solutions, Inc. and Stanley Logistics

10M R308
PHI012