STANLEY®
Security Solutions

PRECISION HARDWARE

EXIT DEVICES

OLYMPIAN 100, 200, 300 SERIES

STANLEY
phi™

TABLE OF CONTENTS

EXIT DEVICES & TRIMS — Page
- Rim Devices 4, 5
- Surface Vertical Rod Devices 6, 7
- Mortise Devices 8, 9

MULLIONS
- Fire Labeled Removable Mullion 11
- Key Removable Mullion 11
- Removable Mullion 11

DEVICE OPTIONS
- CBK Knurled Crossbar 12
- CBR Reinforced Crossbar 12

ACCESSORIES — Page
- Cylinders 13
- Miscellaneous Components 12
- Security Screws 3
- Sex Nuts & Bolts 3
- Strikes 10

ADDITION INFORMATION
- Device Dimensions 3
- Device Minimum Stile Width 14
- Fasteners 3
- Hand of Door and Finishes 2
- Fire Label Rating Chart 15
- Trim Dimensions 13

Introduction

The Olympian Series Crossbar Style Exit Devices provide a traditional aesthetic architectural appeal with proven durability. All Olympian Series Exit Devices are UL listed for panic and fire and are certified to ANSI/BHMA Grade 1. The Olympian Series is available in a variety of finishes and its chassis is constructed from investment cast steel.

Hand of Doors

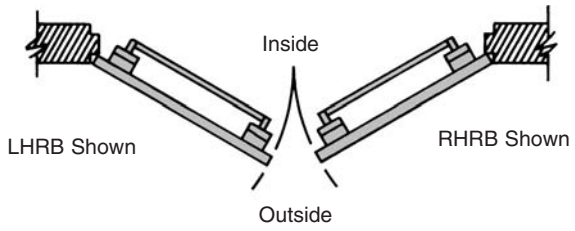

Finishes

ANSI/BHMA	US	Description
600	USP	Primed for Paint
605	US3	Polished Brass, Clear Coated
606	US4	Satin Brass, Clear Coated
612	US10	Satin Bronze, Clear Coated
613	US10B	Dark Oxidized Satin Bronze
625	US26	Polished Chromium Plated
630	US32D	Satin Stainless Steel
689		Aluminum Paint
695		Dark Bronze Paint

Door Sizes

Stock sizes for door widths and heights are listed below. If required, cut to size in the field.

Door Widths	Stock Sizes
2′-1″ to 2′-6″	2′-6″*
2′-7″ to 3′-0″	3′-0″
3′-1″ to 4′-0″	4′-0″

* Not available for Narrow Stile Devices.

Vertical Rod Devices

Device	Door Heights	Stock Sizes
Surface Vertical Rod Device*	up to 7′-0″	7′-0″
	7′-1″ to 8′-0″	8′-0″
	8′-1″ to 10′-0″	10′-0″
Concealed Vertical Rod Device	6′-8″ to 8′-0″	8′-0″
	8′-1″ to 10′-0″	10′-0″

* Surface Vertical Rods are furnished of the samematerial as the device. Stainless steel rods are furnished for 625, 626, 628 and 630 devices.

Device Dimensions

Applies to All Olympian Devices

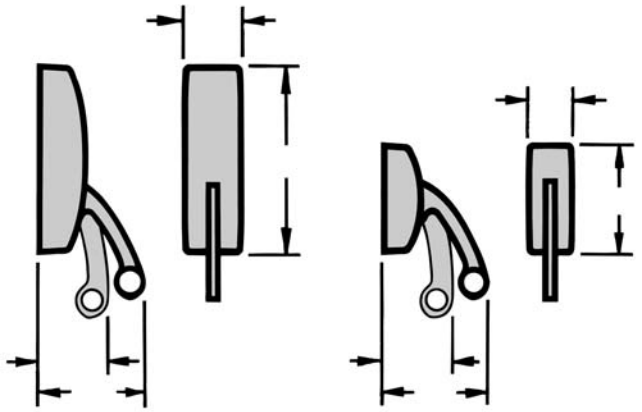

Fasteners

Furnished standard with machine screws and full thread wood/sheet metal screws. Specify Sex Nuts and Bolts (SNB) where recommended or required by the door manufacturer.

Sex Nuts & Bolts (not furnished std.)

Sex Nuts & Bolts are furnished with No. 10-24 x 1″ OHMS (1-1/2″ long screws required for guides).

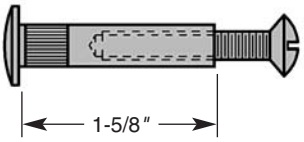

Security Screws

All exposed screws will be a Torx pin in tamper resistant type, machine screws only. Specify (SEC) Security Screws. Cover Screws use a T20 driver, End Cap Screws use a T25 driver.

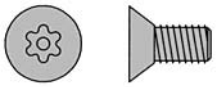

RIM EXIT DEVICES

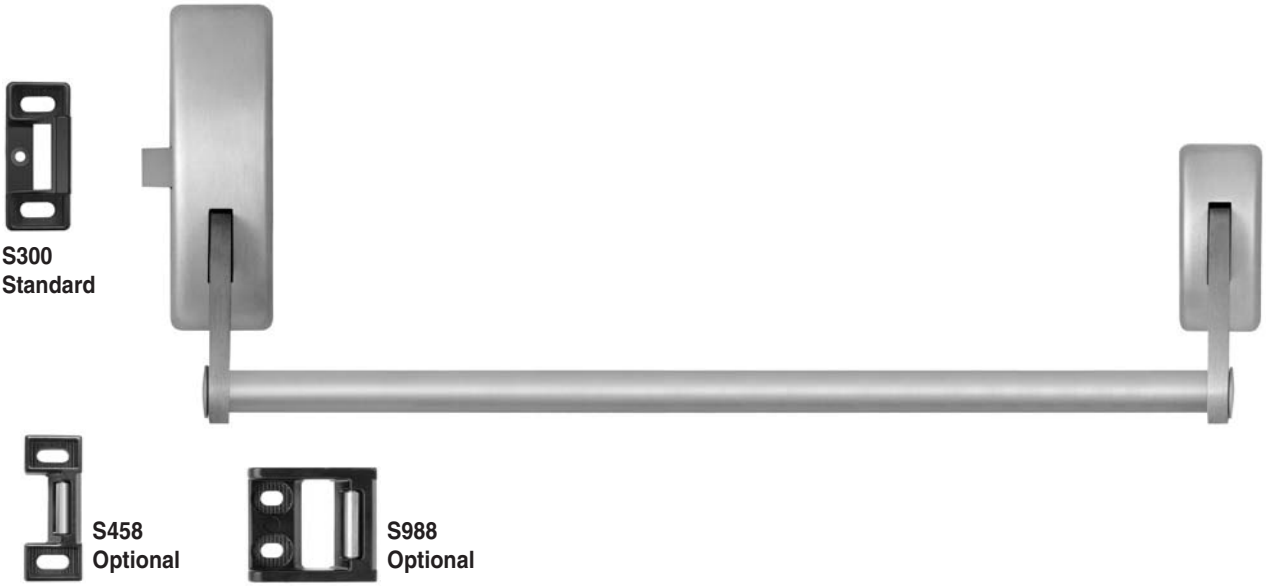

Olympian 100 Series – *Handed*
Olympian R100 Series – *Reversible*
Olympian FL100 Fire Exit Series – *Handed*
Olympian FL100 Fire Exit Series – *Reversible*

DOORS - For all types of single and double doors with a mullion. For mullions, see page 11. Available for 1-3/4″ to 2-1/4″ thick, up to 4'-0″ wide opening. For thicker doors, consult factory. Furnished standard for 1-3/4″ thick, 3'-0″ wide opening.

DEVICE - Covers ANSI A115.2 (Type 161), A115.18 cylinder lock and A115.1 (Type 86) Mortise Lock preparation.

FUNCTIONS - All devices can be converted from one function to another simply by exchanging the Back Plate Assembly in lock stile case and selecting proper outside trim. See page 12 for Back Plate Assemblies and page 5 for Trims.

COVERS - Lock Stile and Hinge Stile Assembly, Cold drawn Bronze, Brass, Stainless Steel.

CHASSIS - Lock Stile and Hinge Stile Assembly, Investment Cast Steel, Zinc Dichromated.

ARMS - Forged Brass.

CROSSBAR - 1 Bronze, Brass or Stainless Steel tubing furnished standard for a 3'-0″ Door. For wider doors, specify door width. Knurled and Reinforced crossbars are available.

LATCHBOLT - Stainless Steel, 3/4″ throw.

STRIKES - No. S300, Investment Cast Stainless Steel, Black Powder Coated furnished standard. No. S988, optional strike for use on Aluminum Door applications, please specify when ordering. No. S458, optional strike for use on Mullion applications, please specify when ordering. For optional strike information see page 10.

CROSSBAR HEIGHT - 34-5/8″ to centerline from finish floor standard. May be varied as situation dictates, consult factory.

DOGGING - Hex Key dogging standard for Panic Hardware. NOT available on Fire Exit Hardware.

HANDED - 100, FL100 Devices are Handed. Specify Hand as RHRB or LHRB. Standard packing RHRB.

REVERSIBLE - R100, FLR100 Devices are Reversible. Standard packaging RHRB.

UL LISTED - Panic and Fire Exit Hardware. For FIRE EXIT HARDWARE Ratings see page 15. Conforms to UL10C and UBC 7-2.

ANSI/BHMA - Devices are BHMA certified for ANSI 156.3,Grade 1. FINISHES - 605, 606, 612, 613, 625, 630. For Finish description see page 3.

CYLINDERS - Rim Type, not furnished standard. Specify when required. For cylinder details see page 13.

STILE WIDTH - See Stile Information on page 14.

DEVICE OPTIONS

Suffix	Description	Page
CBK	Knurled Crossbar	12
CBR	Reinforced Crossbar	12
LD	Less Dogging	12
SNB	Sex Nut and Bolt	3
SEC	Security Screws	3

To specify add Suffix to Device No. (e.g. 2103CD)

1700A "A" Grip

1700B "B" Grip

1700C "C" Grip

2000C "C" Grip

1. All Trims are furnished with wrought plates and extruded or cast solid grips.
2. Specify Grip Design (A,B,C) ("A" Grip furnished standard for 1700 Series Trim, "C" Grip furnished standard for 2000 Series Trim)

4900A "A" Lever

4900B "B" Lever

4900C "C" Lever

4900D "D" Lever

4900K "K" Knob

V4908A

Vandal Resistant Trim

A heavy duty lever trim designed to with stand abuse and vandalism. Composed of extra strength shock-absorbing "overload" springs and heavy duty investment cast stainless steel internal components. Lever returns to the "home" position eliminating the need to reset the lever.

1. All the escutcheons and levers are castings or forgings.
2. Specify Lever or Knob Design (A,B,C,D,K) and Handing ("A" Lever x RHRB furnished standard)
3. 626 Trim furnished for 628 and 630 Devices.

- For Trim dimensions see page 13.
- Trims are BHMA certified for ANSI 156.3, Grade 1.
- Trims are through bolted and will cover 161 and 86 cutouts (except for 2000C Trim).
- Cylinder, Rim Type, not furnished standard. For cylinder details see page 13.
- Trim No.s with prefix "Y" are for Olympian Devices only.

ANSI Function	**01** Exit Only (cover plate)	**02** Dummy Trim	**03** Key Retracts Latchbolt	**05** Key Locks/Unlocks Thumbpiece	**08** Key Locks/Unlocks Lever/Knob	**14** No Cylinder Lever/Knob Always Active	**15** No Cylinder Thumbpiece Always Active
Device Nos.	101 R101 FL101 FLR101	102 R102	103 R103 FL103 FLR103	105 R105 FL105 FLR105	108 R108 FL108 FLR108	114 R114 FL114 FLR114	115 R115 FL115 FLR115
Trim Nos.	1701 2101 4901	1702A 2102C 4902A	1703A 2103C 4903A	Y1705A Y2105C	Y4908A VY4908A	Y4914A	Y1715A Y2015C

Device with Trim:

Device No.

Add **Prefix:** "FL" Fire Labeled Device

Add **Suffix**: for options, see page 4.

Add **Prefix**: "V" Vandal Resistant Lever Trim

Add **Suffix**: Lever or Knob Design (A,B,C,D, K) Grip Design (A,B,C)

Add **Suffix**: "KNR" Knurled Lever or Grip

FL108CBR x VY4908AKNR x RHRB x 630 x S300 x 3'-0" x 7'-0" x 1-3/4"

Device w/options | Trim No. | Hand | Finish | Strike | Door Size

Device Only: Device no., hand, finish, strike, and door size including thickness: (e.g. FL108 x RHRB x 630 x S300 x 3'-0" x7'-0" x 1-3/4")

Trim Only: Trim no., hand, finish, and door thickness: (e.g. VY4908A x RHRB x 626 x 1-3/4")

SURFACE VERTICLE ROD EXIT DEVICES

S300

Olympian 200 Series – *Non Handed*
Olympian FL2200 Fire Exit Series – *Non Handed*

DOORS - For all types of single and double door applications. Available for 1-3/4″ to 2-1/4″ thick, up to 4'-0″ wide by 10'-0″ high openings. For thicker doors, consult factory. Furnished standard for 1-3/4″ thick, 3'-0″ wide by 7'-0″ high openings.

DEVICE - Covers ANSI A115.2 (Type 161), A115.18 cylinder lock and A115.1 (Type 86) Mortise Lock preparation.

FUNCTIONS - Functions are field selectable. The device is furnished for a desired function if specified. If not specified the "03" function is furnished standard.

COVERS - Lock Stile and Hinge Stile Assembly, Cold drawn Bronze, Brass, Stainless Steel.

CHASSIS - Lock Stile and Hinge Stile Assembly, Investment Cast Steel, Zinc Dichromated.

ARMS - Forged Brass or Bronze.

CROSSBAR HEIGHT - 34-5/8″ to centerline from finish floor standard. May be varied as situation dictates, consult factory.

DOGGING - Hex Key dogging standard for Panic Hardware. NOT available on Fire Exit Hardware.

UL LISTED - Panic and Fire Exit Hardware. For FIRE EXIT HARDWARE Ratings see page 15. Conforms to UL10C and UBC 7-2.

ANSI/BHMA - Devices are BHMA certified for ANSI 156.3, Grade 1.

FINISHES - 605, 606, 612, 613, 625, 630. For Finish description see page 3.

CYLINDERS - Rim Type, not furnished standard. Specify when required. For cylinder details see page 13.

STILE WIDTH - See Stile Information on page 14.

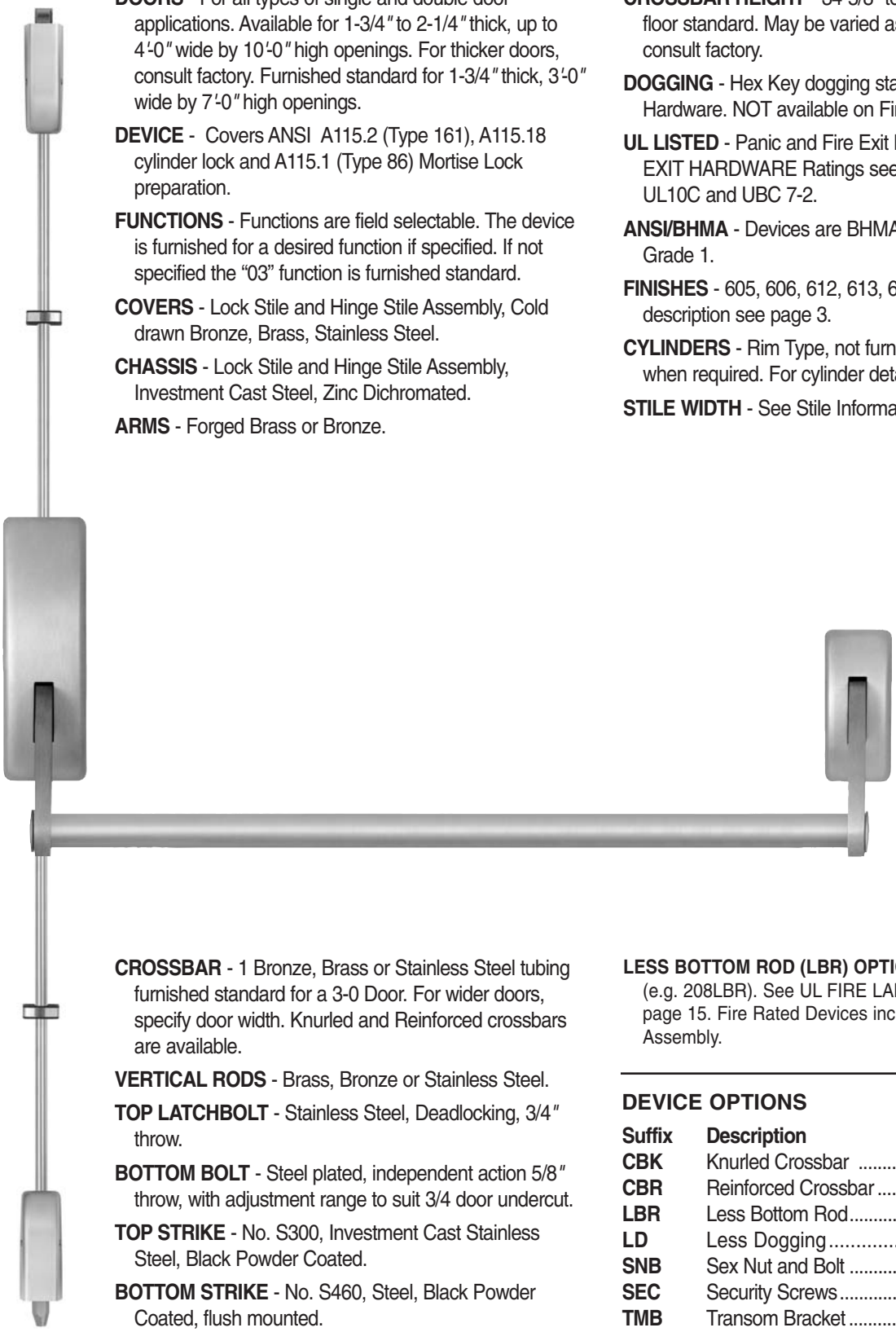

CROSSBAR - 1 Bronze, Brass or Stainless Steel tubing furnished standard for a 3-0 Door. For wider doors, specify door width. Knurled and Reinforced crossbars are available.

VERTICAL RODS - Brass, Bronze or Stainless Steel.

TOP LATCHBOLT - Stainless Steel, Deadlocking, 3/4″ throw.

BOTTOM BOLT - Steel plated, independent action 5/8″ throw, with adjustment range to suit 3/4 door undercut.

TOP STRIKE - No. S300, Investment Cast Stainless Steel, Black Powder Coated.

BOTTOM STRIKE - No. S460, Steel, Black Powder Coated, flush mounted.

LESS BOTTOM ROD (LBR) OPTION - Specify suffix "LBR" (e.g. 208LBR). See UL FIRE LABEL RATING Chart on page 15. Fire Rated Devices include FB277 Fire Bolt Assembly.

DEVICE OPTIONS

Suffix	Description	Page
CBK	Knurled Crossbar	12
CBR	Reinforced Crossbar	12
LBR	Less Bottom Rod	6
LD	Less Dogging	12
SNB	Sex Nut and Bolt	3
SEC	Security Screws	3
TMB	Transom Bracket	12

To specify add Prefix to Device No. (e.g. 203LBR)

S460

1700A
"A" Grip

1700B
"B" Grip

1700C
"C" Grip

2000C
"C" Grip

1. All Trims are furnished with wrought plates, extruded or cast solid grips.
2. Specify Grip Design (A,B,C) ("A" Grip furnished standard for 1700 Series Trim, "C" Grip furnished standard for 2000 Series Trim)

4900A
"A" Lever

4900B
"B" Lever

4900C
"C" Lever

4900D
"D" Lever

4900K
"K" Knob

V4908A
Vandal Resistant Trim

A heavy duty lever trim designed to with stand abuse and vandalism. Composed of extra strength shock-absorbing "overload" springs and heavy duty investment cast stainless steel internal components. Lever returns to the "home" position eliminating the need to reset the lever.

1. All the escutcheons and levers are castings or forgings.
2. Specify Lever or Knob Design (A,B,C,D,K) and Handing ("A" Lever RHRB furnished standard).
3. 626 Trim is furnished for 630 Devices.

- For Trim dimensions see page 13.
- Trims are BHMA certified for ANSI 156.3, Grade 1.
- Trims are through bolted and will cover 161 and 86 cutouts (except for 2000C Trim).
- Cylinder, Rim Type, not furnished standard. For cylinder details see page 13.
- Trim No.s with prefix "Y" are for Olympian Devices only.

ANSI Function	**01** Exit Only (cover plate)	**02** Dummy Trim	**03** Key Retracts Latchbolt	**05** Key Locks/Unlocks Thumbpiece	**08** Key Locks/Unlocks Lever/Knob	**14** No Cylinder Lever/Knob Always Active	**15** No Cylinder Thumbpiece Always Active
Device Nos.	201 FL201	202	203 FL203	205 FL205	208 FL208	214 FL214	215 FL215
Trim Nos.	1701 2101 4901	1702A 2102C 4902A	1703A 2103C 4903A	1705A 2105C	Y4908A Y4908A	Y4914A	**Y**1715A Y2015C

Device with Trim:

Device No.

Add Prefix: "FL"
Fire Labeled Device

Add **Suffix**: for options, see page 6.

Add **Prefix**: "V" Vandal Resistant Lever Trim

Add **Suffix**: Lever or Knob Design (A,B,C,D,K)
Grip Design (A,B,C)

Add **Suffix**: "KNR" Knurled Lever or Grip

FL208LBR x VY4908AKNR x RHRB x 630 x 3'-0" x 7'-0" x 1-3/4"

Device w/options — Trim No. — Hand — Finish — Door Size

Device Only: Device no., hand, finish, strike, and door size including thickness:
(e.g. FL208CD x RHRB x 630 x 3'-0" x7'-0" x 1-3/4")

Trim Only: Trim no., hand, finish, strike, and door thickness: (e.g. VY4908A x RHRB x 626 x 1-3/4")

MORTISE EXIT DEVICES

Olympian 300 Series – *Handed*
Olympian FL300 Fire Exit Series – *Handed*

DOORS - For all types of single and double door applications. Available for 1-3/4″ to 2-1/4″ thick, up to 4'-0″ wide opening. For thicker doors, consult factory. Furnished standard for 1-3/4″ thick, 3'-0″ wide opening.

DEVICE - Covers ANSI A115.1 (Type 86) Mortise Lock preparation.

COVERS - Lock Stile and Hinge Stile Assembly, Cold drawn Bronze, Brass, Stainless Steel.

CHASSIS - Lock Stile and Hinge Stile Assembly, Investment Cast Steel, Zinc Dichromated.

ARMS - Forged Brass or Bronze.

CROSSBAR - 1 Bronze, Brass or Stainless Steel tubing furnished standard for a 3'-0″ Door. For wider doors, specify door width. Knurled and Reinforced crossbars are available.

DOGGING - Hex Key dogging standard for Panic Hardware. NOT available on Fire Exit Hardware.

HANDED - Specify hand when ordering as RHRB or LHRB. Standard packaging is RHRB.

UL LISTED - Panic and Fire Exit Hardware. For FIRE EXIT HARDWARE Ratings see page 15. Conforms to UL10C and UBC 7-2.

ANSI/BHMA - Devices are BHMA certified for ANSI 156.3, Grade 1.

FINISHES - 605, 606, 612, 613, 625, 630. For Finish description see page 3.

CYLINDERS - Mortise type, not furnished standard. For cylinder details see page 13.

STILE WIDTH - See Stile Information on page 14.

CROSSBAR HEIGHT - 34-5/8″ to centerline from finish floor standard. May be varied as situation dictates, consult factory.

DEVICE OPTIONS

Suffix	Description	Page
CBK	Knurled Crossbar	12
CBR	Reinforced Crossbar	12
LD	Less Dogging	12
SNB	Sex Nut and Bolt	3
SEC	Security Screws	3

To specify add Suffix to Device No. (e.g. 103SEC)

MORTISE LOCK – *Handed*

Fits doors machined per ANSI A115.1 for Federal Lock Type 86.

BACKSET - 2-3/4″.

CASE - Wrought Steel, Zinc Dichromate finish.

LOCK FRONT PLATE - 8″ x 1-1/4″ Bronze, Brass or Stainless Steel, pivots for beveled or square edged doors.

LATCHBOLT - Stainless Steel, Deadlocking, 3/4″ throw, anti-friction.

GUARDBOLT - Stainless Steel, sliding type.

FINISHES - LOCK FRONT PLATE and STRIKE 605, 606, 612, 613, 625, 630. For Finish description see page 3.

STRIKES - No. S982 handed curved lip strike standard. For optional strikes see page 10.

LOCK NO. - M303 for 01, 02 and 03 functions.
- M308 for 05, 05A, 08 and 08A functions.

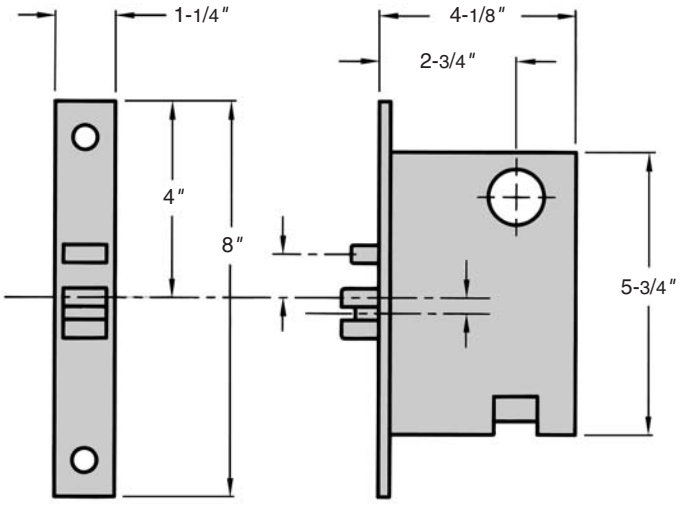

Mortise Lock Dimensions

1700A
"A" Grip

1700B
"B" Grip

1700C
"C" Grip

2000C
"C" Grip

1. All Trims are furnished with wrought plates, extruded or cast solid grips.
2. Specify Grip Design (A,B,C) ("A" Grip furnished standard for 1700 Series Trim, "C" Grip furnished standard for 2000 Series Trim)
3. Trims with Thumbpiece are Handed, Specify Hand.

4900A
"A" Lever

4900B
"B" Lever

4900C
"C" Lever

4900D
"D" Lever

4900K
"K" Knob

V4908A
Vandal Resistant Trim
A heavy duty lever trim designed to with stand abuse and vandalism. Composed of extra strength shock-absorbing "overload" springs and heavy duty investment cast stainless steel internal components. Lever returns to the "home" position eliminating the need to reset the lever.

1. All the escutcheons and levers are castings or forgings.
2. Specify Lever or Knob Design (A,B,C,D,K) and Handing ("A" Lever RHRB furnished standard).
3. 626 Trim is furnished for 630 Devices.
4. All Lever Trims, M4908K and M4914K are Handed, Specify Hand.

- For Trim dimensions see page 13.
- Trims are BHMA certified for ANSI 156.3, Grade 1.
- Trims are through bolted and will cover 161 and 86 cutouts (except for 2000C Trim).
- Cylinder, Mortise Type, not furnished standard. For cylinder details see page 13.

ANSI Function	**01** Exit Only (cover plate)	**02** Dummy Trim	**03** Key Retracts Latchbolt	**05** Key Locks/Unlocks Thumbpiece	**08** Key Locks/Unlocks Lever/Knob	**14** No Cylinder Lever/Knob Always Active	**15** No Cylinder Thumbpiece Always Active
Device Nos.	301 FL301	302	303 FL303	305 FL305	308 FL308	314 FL314	315 FL315
Trim Nos.	1701 2101 4901	1702A 2102C 4902A	1703A 2103C M4903A	M1705A M2105C	M4908A VM4908A	M4914A	M1715A M2015C

Device with Trim:

Device No.

Add **Prefix**: "FL"
Fire Labeled Device

Add **Suffix**: for options, see page 8.
Add **Prefix**: "V" Vandal Resistant Lever Trim
Add **Prefix**: "M" Vandal Resistant Lever Trim
Add **Suffix**: Lever or Knob Design (A,B,C,D,K)
Grip Design (A,B,C)
Add **Suffix**: "KNR" Knurled Lever or Grip

FL308CBR x VM4908AKNR x RHRB x 626 x S982 x 3'-0" x 7'-0" x 1-3/4"

Device w/options | Trim No. | Hand | Finish | Strike | Door Size

Device Only: Device no., hand, finish, strike, and door size including thickness:
(e.g. FL308CD x RHRB x 630 x S982 x 3'-0" x7'-0" x 1-3/4")

Trim Only: Trim no., hand, finish, strike, and door size including thickness: (e.g. VM4908A x RHRB x 626 x 1-3/4")

STRIKES

Rim Exit Devices

For Minimum Stile Widths see page 14.

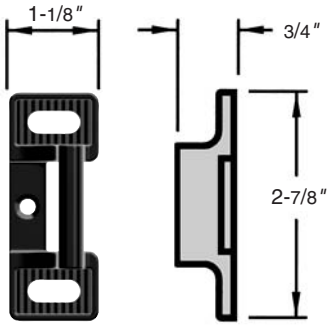

S300 Standard
For Rim and Top Strike for SVR Devices. Black Powder Coated Investment Cast Stainless Steel.

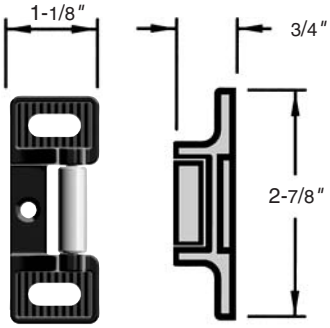

S301 Optional
For Rim and Top Strike for SVR Devices. Black Powder Coated Investment Cast, Stainless Steel Base and Roller.

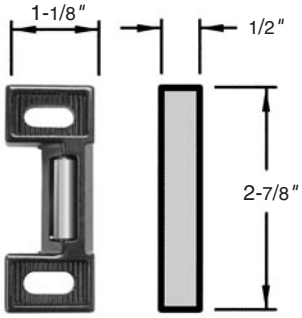

S458 Optional
For Rim Devices. Black Powder Coated Investment Cast, Stainless Steel Base and Roller.

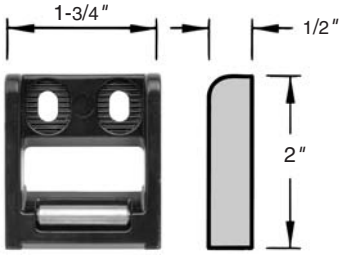

S988 Standard
For Narrow Stile Rim Devices. Black Powder Coated Investment Cast, Stainless Steel Base and Roller. Includes Rub Strip.

Vertical Rod Exit Devices

Top Strike - For Surface Vertical Rod Devices, S300 standard and S301 optional, see above.

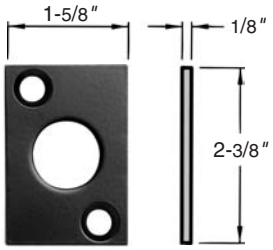

S460 Bottom Strike
For Vertical Rod Devices, Surface or Concealed. Black Powder Coated Steel.

100 or R100 Rim x Vertical Rod Exit Device

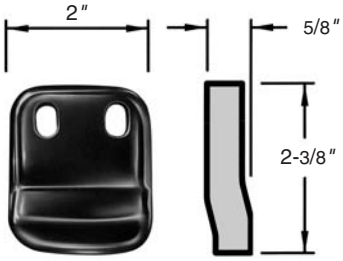

S459 Optional Rim Strike
For Non Fire Rated 100 & R100 Rim x Vertical Rod Device on a Pair of Doors without a Mullion. Black Powder Coated Investment Cast Stainless Steel.

Mortise Exit Devices

Open Back Strikes allow a pair of doors to open and close independently. Strikes are handed. Specify Hand same as Mortise Lock (e.g. RHRB).

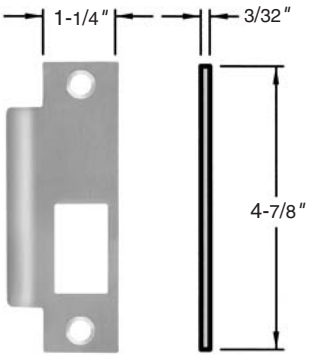

S982 Standard
Curved lip.

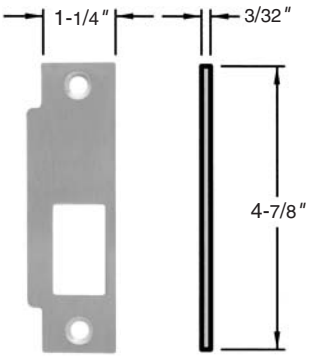

S983 Optional
7/8″ Flat Lip to center. For overlapping astragal.

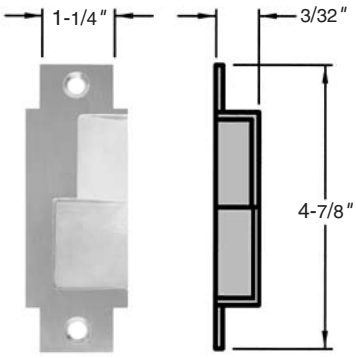

S984 Optional
Open Back Strike For 4-7/8″ x 1-1/4″ door edge cutout.

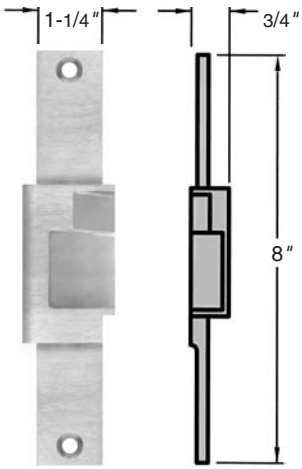

S985 Optional
Open Back Strike For 8″ x 1-1/4″ door edge cutout.

Mullion Cap
MC822

Mullion Base
MB822

Mullion Cap
MC811

Mullion Base
MB811

Key Removable Mullion Cap
KMC822
(Rim Cylinder required)

Mullion Cap Spacer
MCS822

Interlock
S1447

Stabilizer
ST989

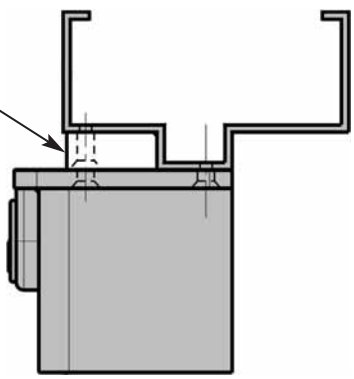

Removable Mullions

The Mullion is used to adapt a double door opening to two single door openings with Rim Exit Devices. When the full width of an opening is required, the mullion may be removed.

KEY REMOVABLE MULLION (KR) - Provides a secure yet quick & easy means of removing the 822 or FL822 Mullion. The mullion can be reinstalled and locked without the need of the key.

STOCK SIZE - For openings 8′-0″ high. For openings less than 8′-0″ high the mullion can be cut down. For openings greater than 8′-0″ high using the 822, KR822 or 811 mullions, consult factory.

FINISHES - 600, 689, 695. For Finish description see page 3.

822, FL822, KR822, FLKR822 Mullion

U.L. LISTED - FL822 and FLKR822 listed for Fire Exit Hardware. For FIRE LABEL RATING Chart see page 15.

MULLION - 2″ x 3″ Steel.

MULLION BASE - Investment Cast Steel, 2″ wide 3-1/2″ deep. Furnished with steel anchors for concrete floors.

INTERLOCK - Black Powder Coated Investment Cast Stainless Steel. Furnished standard for FL822 and FLKR822 Mullions. It interlocks the mullion to the Rim Active Case and S300 or S301 Strike.

STABILIZERS - Black Powder Coated Steel. Stabilizers are furnished standard for FL822 and FLKR822 Mullions.

MULLION CAP SPACER - Minimum width 3-1/2″. For 2-1/4″ frame spacer specify part no. MCS822.

HC822, HCKR822 Mullion

822, FL822 MULLION CAP - MC822 Investment Cast Steel, 4 wide 3-5/8 deep.

KR822, FLKR822 KEY REMOVABLE MULLION CAP ASSEMBLY - Investment Cast Steel - can be ordered to convert existing 822 or FL822 mullions to Keyed Removable Mullions. Retrofits to the hole pattern of an MC822 Mullion Cap. To order specify KMC822 or KMC822F. For wire run information, please consult factory.

CYLINDER - Not furnished standard - Rim Type required. See page 13 for cylinder details.

811 Mullion

MULLION - 2″ x 2″ Steel Mullion.

MULLION CAP - Cast 4-1/2″ wide x 2-5/16″, furnished with machine screws for metal frames.

MULLION BASE - Cast 2″ wide x 2-3/4″, furnished with sheet metal screws and plastic anchors.

To Order: Specify Mullion No. Height Finish (e.g. 822 x 8′-0″ x 600)

ACCESSORIES

Back Plate Assemblies

BP103
Back plate assembly for 100, R100, FL100 and FLR100 Devices to convert to Night Latch (03) function.

BP108
Back plate assembly for 100, R100, FL100 and FLR100 Devices to convert to thumbpiece (05, 15) or knob/lever (08, 14) functions.

Miscellaneous

Dogging Key
DK220 - 7/32″ standard hex.

Hex Wrench
5/32″ - To secure crossbar plugs to crossbar.

Crossbar Plug
CP1038 For all Devices. Furnished with 10-32″ x 7/8″ socket cap head machine screw.

Rod Guide
RG124 - For Surface Vertical Rod Devices. Specify finish.

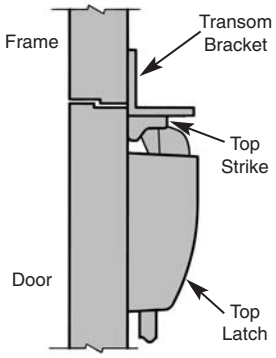

Transom Bracket - 2200 Series.

TMB453 - To mount the top strike in the flush transom application. Prepped for S300 Strike.

Top Rod - 2200 and FL2200 Series.
Three stock lengths available for 7′-0″, 8′-0″, and 10′-0″ high doors.

TR1854 - For 7′-0″ doors, rod is 36″ long.
TR1855 - For 8′-0″ doors, rod is 48″ long.
TR1857 - For 10′-0″ doors, rod is 72″ long.

For doors of lesser height rods must be field cut. Specify finish (see page 3 for Finish Descriptions).

Bottom Rod - 2200 and FL2200 Series.

BR1859 - For Touchbar location at 39-15/16″ from finished floor, rod is 32-5/16″ long. Specify finish (see page 3 for Finish Descriptions).

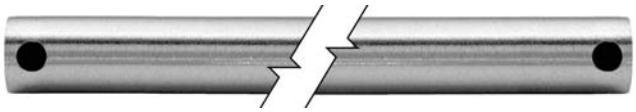

Crossbar - Two stock lengths available for 3′-0″ and 4′-0″ wide doors. For doors of lesser widths, bars must be field cut. Reinforced Crossbar and Knurled Crossbar options are available. Specify finish (see page 3 for Finish Descriptions).

	3-0 Door	**4-0 Door**
	30-3/4 Long	42-3/4 Long
Standard	CB123	CB124
Reinforced	CBR123	CBR124
Knurled	CBK123	CBK124

Less Dogging

Available for all Olympian Series Devices except Fire Exit

TRIM DIMENSIONS

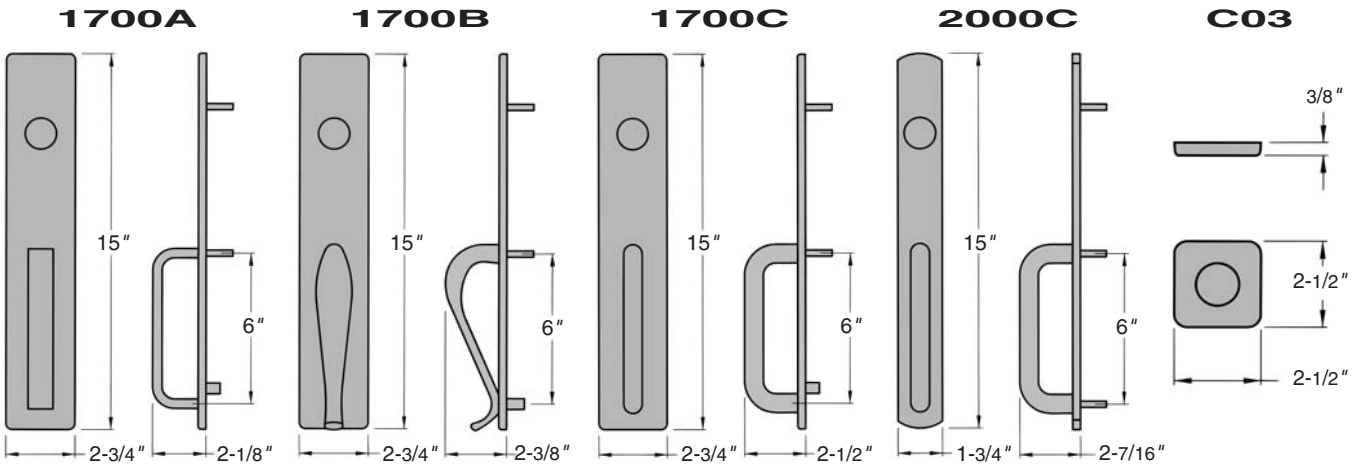

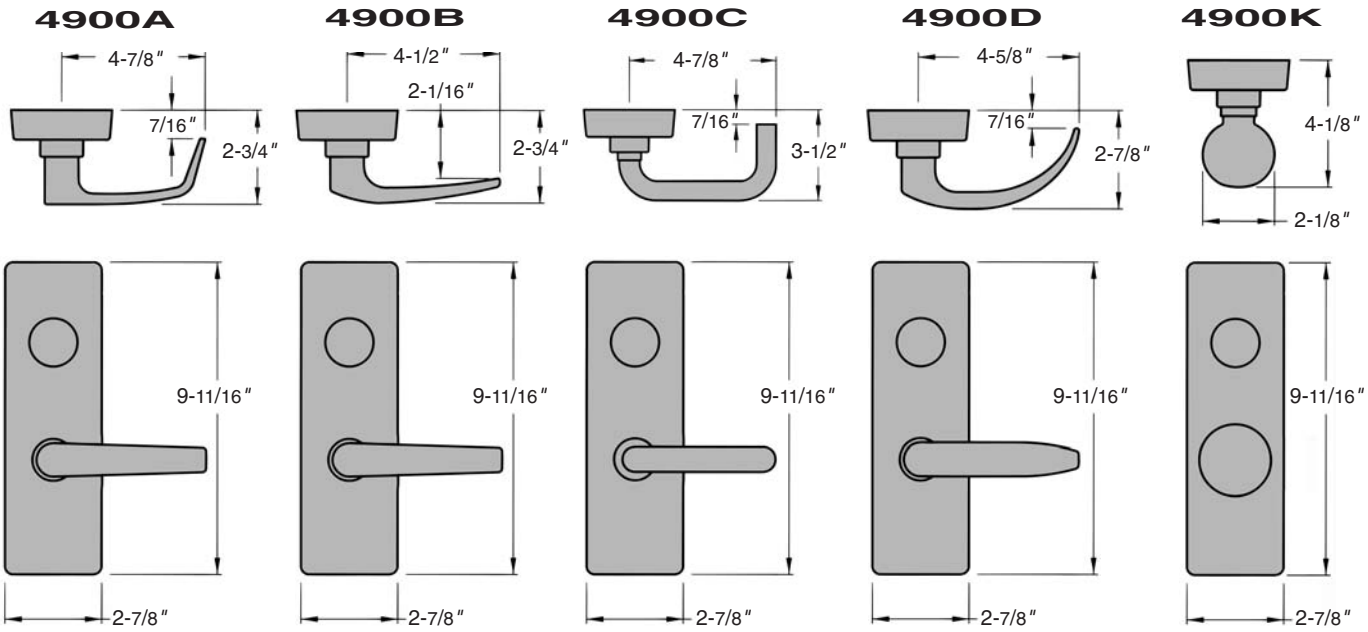

Lever Centerline 38-3/16″ from Finish Floor when Device Centerline is 39-15/16″.

CYLINDERS

Cylinders are not furnished standard with the device or trim. BEST 7 pin standard. Available in 612 and 626 Finish. Specify Type and Finish when ordering. (e.g. 1E74 x 626)

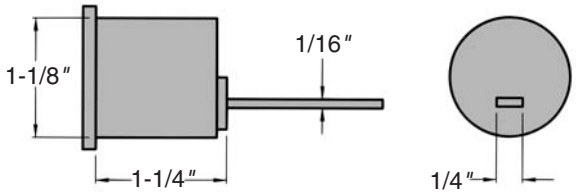

Rim Cylinder - 1E74
Required for:
- Rim Exit Device Outside Trims
- Vertical Rod Exit Device Outside Trims
- Key Removable Mullion

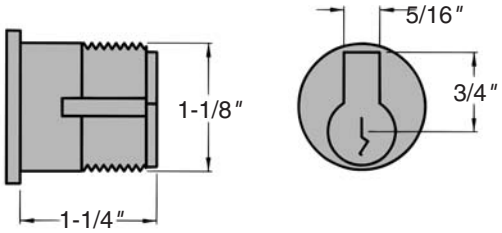

Mortise Cylinder - 3E74
Required for:
- Mortise Exit Device Outside Trims

MINIMUM STILE WIDTH

Single Doors – Rim Devices

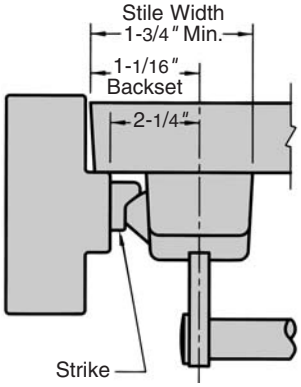

Rim Device with S300 OR S301 Strike

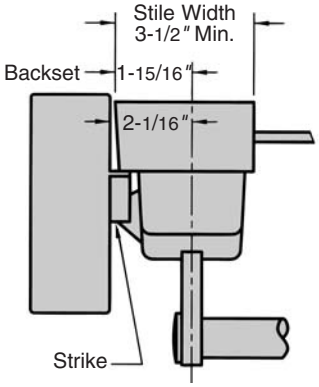

Rim Device with S988 Strike For 3-1/2" medium stile Aluminum doors and frames. Consult factory.

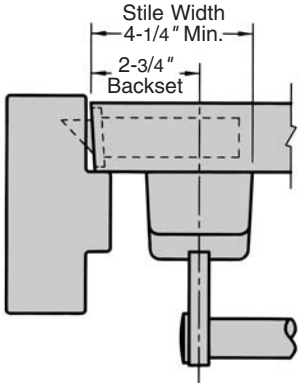

Rim Device with S300 OR S301 Strike

Pair of Doors, Rim Devices

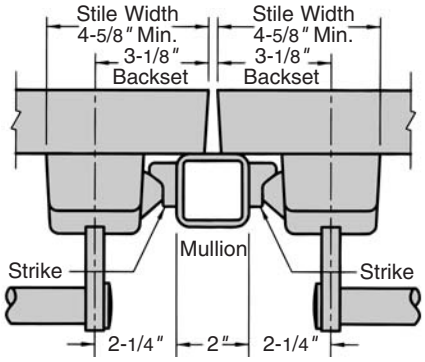

Rim Devices with S300 or S301 Strikes and Mullion

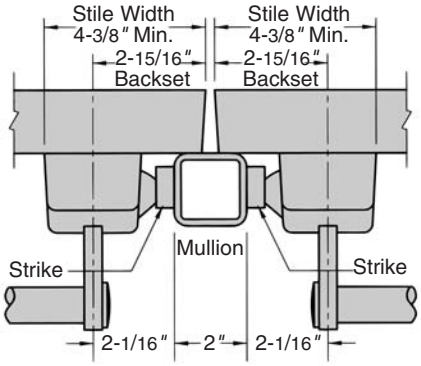

Rim Devices with S458 Strikes and Mullion

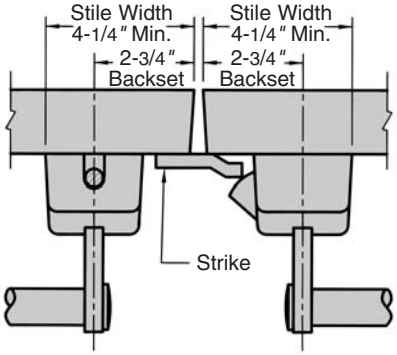

Rim Device and Vertical Rod Device with S459 Strike

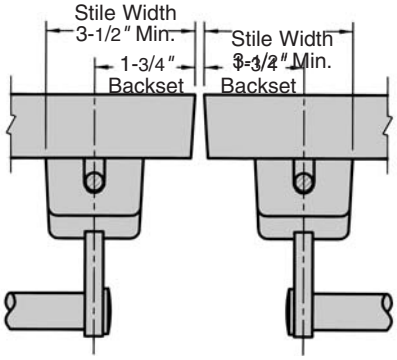

Two Surface Vertical Rod Devices
For 3-1/2″ medium stile doors consult factory.

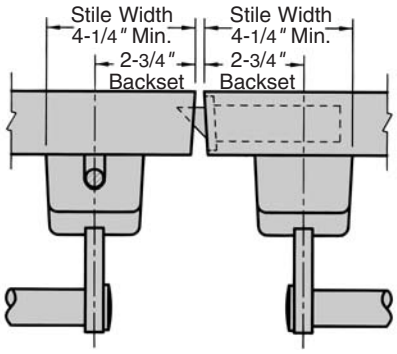

Mortise and Surface Vertical Rod Device

FIRE LABEL RATING

Type and Application	Door Opening	Exit Device Series	UL Fire Door Rating (A) 3 Hour	(B) 1-1/2 Hour	(C) 3/4 Hour	(D) 1-1/2 Hour	(E) 3/4 Hour	20 min. Door
SINGLE DOOR								
Rim Device	4'-0"W x 10'-0"H	FL100, FLR100	•	•	•	•	•	•
Mortise Device	4'-0"W x 10'-0"H	FL300	•	•	•	•	•	•
PAIR OF DOORS								
Two Rim Devices with Mullion	8'-0"W x 8'-0"H	FL100, FLR100 x FL822, FLKR822	•	•	•	•	•	•
Two Surface Vertical Rod Devices Swinging in the Same or Opposite Direction	8'-0"W x 10'-0"H	FL200, FL200LBR	•	•	•	•	•	•
Mortise Lock Device Surface Vertical Rod Device	8'-0"W x 10'-0"H	FL300 x FL200, FL200LBR	•	•	•	•	•	•

All Fire Exit Hardware conforms to UL10C and UBC 7-2.

Consult with Door Manufacturer for specific limitations on Fire Door Assemblies.

For more information on Stanley Security Solutions' products, services, and office locations visit our web site at www.stanleysecuritysolutions.com

Product information contained in this catalog has been compiled and presented with as much care and completeness as is reasonably possible. Errors or mistakes may be present, and in many cases, reliance has been placed on information supplied by other manufacturers which may be in error or which may be subject to changes or modifications by the manufacturer without notice and without obligation. Therefore, no guarantee can be made or should be assumed or implied with regards to product information contained in this catalog.

STANLEY®

Security Solutions

Stanley Security Solutions, Inc.
6161 E. 75th Street Indianapolis, Indiana 46250
www.stanleysecuritysolutions.com
© 2007 Stanley Security Solutions, Inc. and Stanley Logistics

7.5M R807FP
PHI007