STANLEY®
Security Solutions

PRECISION HARDWARE

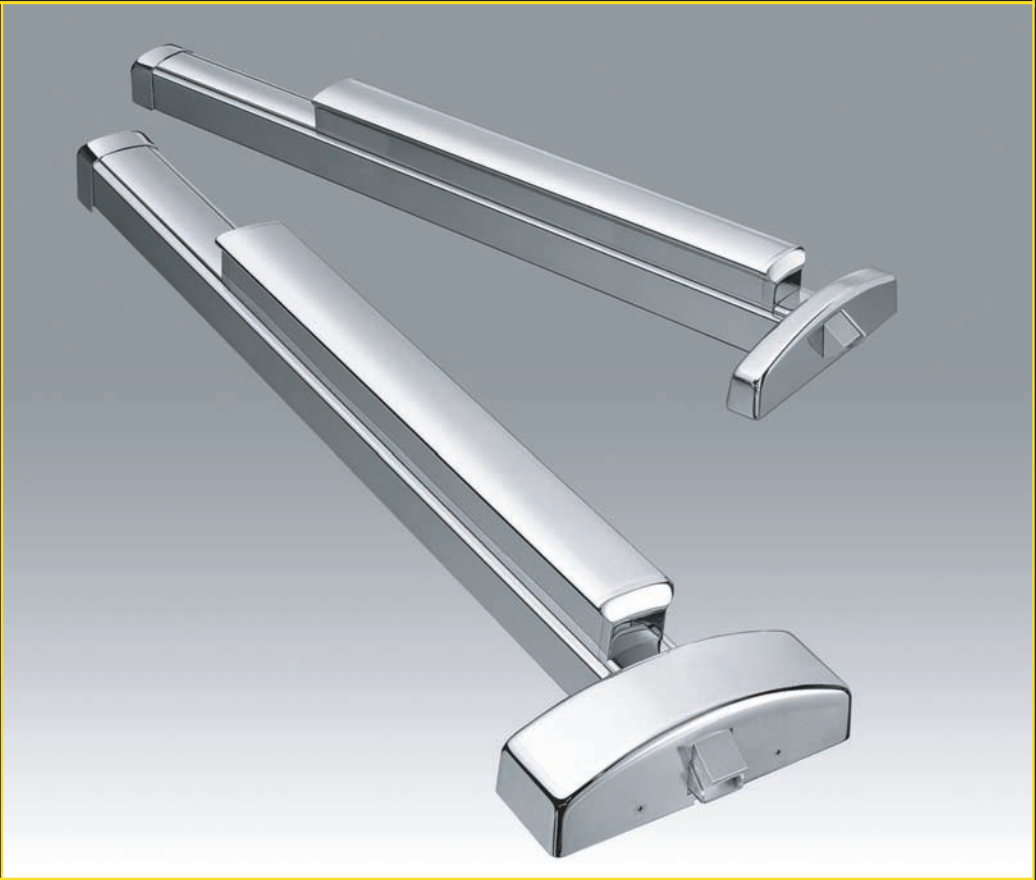

EXIT DEVICES

PRODUCT INTRODUCTION

STANLEY
phi™

INTRODUCTION

Originally located in southeastern Michigan, Precision Hardware has been manufacturing panic and fire exit hardware for over a half century. Acquired by the Stanley Works in 2005, Precision Hardware relocated to Indianapolis, Indiana in 2006. Now as a part of the Stanley Security Solutions family, Precision will be enabled to expand its product offering and provide better turn around times and service for its valued customers.

Today Precision Hardware offers a complete line of exit devices for a variety of security solutions. The Apex and Olympian Series Exit Devices are manufactured with investment cast steel for strength and security. All working mechanisms are encased in a heavy duty solid brass, bronze, aluminum or stainless steel housing incorporating true ANSI/BHMA architectural finishes. Precision offers touchbar and crossbar type devices for hollow metal, wood, aluminum stile and rail doors. A variety of electronic and security features are also available. With the addition of Precision Hardware, Stanley Security Solutions, Inc. can now offer a complete comprehensive architectural product offering from a single source location.

Touchbar Clearance

The Apex Wide Stile and Reliant Series Exit Devices accommodate doors with vision lites or glass windows where the vision lites frames or moldings project up to 1/4″ beyond the face of the door. The Active Case and End Cap Mounting Bracket are mounted on the face of the door without shims or without cutting the glass molding. These devices have a 1/4″ gap between the face of the door and the Touchbar Assembly. This gap allows proper functioning of the devices even on doors which are not perfectly flat. Since the Active Case is mounted directly on the face of the door, it accommodates standard lengths of through bolting screws, thumbpieces, knob & lever yoke fingers, and cylinder tail pieces.

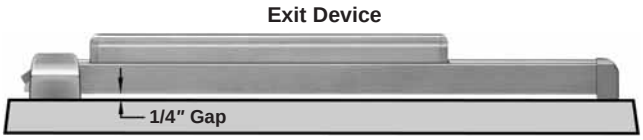

Finishes

BHMA	US	Description
600	USP	Primed for Paint
605	US3	Polished Brass, Clear Coated
606	US4	Satin Brass, Clear Coated
612	US10	Satin Bronze, Clear Coated
613	US10B	Dark Oxidized Satin Bronze
625	US26	Polished Chromium Plated
628	US28	Satin Aluminum, Clear Anodized
630	US32D	Satin Stainless Steel
689		Aluminum, Powder Coated
695		Dark Bronze, Powder Coated

The narrow streamline case cover design compliments the wide stile Apex Series Exit Devices. A clean and compact profile integrates with 1-3/4″ narrow stile and rail door applications. The narrow design encases rugged components which are assembled in a heavy duty investment cast chassis for durable operation. The active case through bolts to the trim for proper alignment. Trims are designed to match wide stile Apex Series lever styles.

Finishes - 605, 606, 612, 613, 625, 628, 630.
For Finish description see page 2.

UL Listed - Panic and Fire Exit Hardware. Conforms to UL10C and UBC 7-2.

ANSI/BHMA - Devices are BHMA certified for ANSI 156.3, Grade 1 Standard.

Less Bottom Rod - (LBR) is available for Concealed Vertical Rod Exit Devices.

Options:

Cylinder Dogging - (CD) provides the ability to lock down the touch bar with a key cylinder so the door can be used in the push/pull mode.

Touchbar Monitoring - (TS) is available for all Narrow Stile Apex Series Devices. The Touchbar Monitoring Switch is an internally mounted switch that is used to signal electromagnetic locks, horns, monitoring stations or other electronic components.

Weatherized Touchbar Monitoring - (WTS) similar to the standard Touchbar Monitoring but designed for use on a variety of exit device applications where contact with the elements may occur.

Device Series

Rim	**2400 Series - Non Handed** **FL2400 Fire Exit Series - Non Handed**
Concealed Vertical Rod	**2600 Series - Non Handed** **FL2600 Fire Exit Series - Non Handed**

Exit Alarm - (ALK: Battery Operated, ALW: Remote Power) provides a simple way to audibly monitor the use of an exit device. The unit contains a Piezo Alarm which is activated when the touchbar is depressed. Alarm sounds at 80db at 10 feet. It is also equipped with an LED indicator. The LED flashes GREEN for 20 seconds when the unit is arming and flashes RED every 20 seconds when the alarm is armed.

Weatherized Exit Alarm - (WALW) similar to the standard Exit Alarm but designed for use on a variety of applications where contact with elements may occur.

Electric Latch Retraction - (ELR) device provides remote Latch Retraction for controlling entry. Continuous duty solenoids retract Latchbolts for momentary unlatching or continuously for dogging. The ELR device can be interfaced with automatic door operators, card readers, push buttons, toggle/key switches, and/or fire alarm systems.

Delayed Egress - (DE) device provides a controlled egress for openings which require Panic or Fire Exit Hardware for safe egress. It is a self contained exit device which when armed will deny exit to unauthorized personnel for 15 or 30 seconds while simultaneously sounding a local and remote audible alarm. The Remote Monitoring feature will alert the security personnel that an attempt is being made to exit the opening. After the 15 or 30 second Time Delay period the device will function as a standard exit device for safe egress. Available for all narrow stile Apex Series Exit Devices. The Delayed Egress Devices are manufactured and tested to exceed ANSI 156.3 and 156.24 Standards. Devices are UL Listed for category FWAX - Special Locking Arrangements and meet all requirements of NFPA 101.

2900A "**A**" Lever

2900B "**B**" Lever

2900C "**C**" Lever

2900D "**D**" Lever

1. Trims are BHMA certified for ANSI 156.3, Grade 1 Standard.
2. Trims are through bolted.
3. Cylinder - not furnished standard - Rim Type for "03" function. Mortise Type for "08" function. Use 1-1/4 long standard mortise cylinder. Specify when required.
4. Specify Lever Design (A,B,C,D) and Handing ("A" Lever RHRB furnished standard).
5. All escutcheons and levers are castings or forgings. All levers return to the face of the door with a 1/2″ or less gap, except for the "B" Lever.

Trims / ANSI Function

Devices Series	**01** Exit Only (cover plate)	**02** Dummy Trim	**03** Key Retracts Latchbolt	**08** Key Locks/Unlocks Lever	**14** No Cylinder Lever Always Active
Rim 2400, FL2400 CVR 2600, FL2600	2901	2902A	2903a	2908A	2914A

- When specifying Exit Device replace the last two digits of device series with the proper function number(e.g. 2408 for a Rim Device with "08" function).

APEX — WIDE STILE TOUCHBAR DEVICES

Contemporary touchbar made for today's demanding architectural requirements. Finely machined parts insure the smooth and easy operation of the touchbar. The clean, streamline design of the touchbar and case cover are formed around heavy duty rugged components necessary to withstand heavy traffic and abuse. Apex Devices meet the most stringent needs of the owner and architect.

Finishes - 605, 606, 612, 613, 625, 628, 630.
For Finish description see page 2.

UL Listed - Panic and Fire Exit Hardware. Conforms to UL10C and UBC 7-2.

ANSI/BHMA - Devices are BHMA certified for ANSI 156.3, Grade 1 Standard.

Less Bottom Rod - (LBR) is available for Vertical Rod Exit Devices, Surface or Concealed.

Options:

Cylinder Dogging - (CD) provides the ability to lock down the touch bar with a key cylinder so the door can be used in the push/pull mode.

Exit Alarm - (ALK: Battery Operated, ALW: Remote Power) provides a simple way to audibly monitor the use of an exit device. The unit contains a Piezo Alarm which is activated when the touchbar is depressed. Alarm sounds at 80db at 10 feet. It is also equipped with an LED indicator. The LED flashes GREEN for 20 seconds when the unit is arming and flashes RED every 20 seconds when the alarm is armed.

Weatherized Exit Alarm - (WALW) identical operation to the standard Exit Alarm but Weatherized design for use on a variety of applications where contact with elements may occur.

Electric Latch Retraction - (ELR) device provides remote Latch Retraction for controlling entry. Continuous duty solenoids retract Latchbolts for momentary unlatching or continuously for dogging. The ELR device can be interfaced with automatic door operators, card readers, push buttons, toggle/key switches, and/or fire alarm systems.

Electric Device - (E), Rim or Mortise, controls entry by remote locking or unlocking of the outside trim. In addition to a 24 VDC solenoid, the device is also equipped with a SPDT - single pole double throw switch. The switch monitors the outside trim (locked or unlocked).

Device Series	
Rim	**2100 Series - Reversible** **FL2100 Fire Exit Series - Reversible**
Surface Vertical Rod	**2200 Series - Reversible** **FL2200 Fire Exit Series - Reversible**
Mortise	**2300 Series - Handed** **FL2300 Fire Exit Series - Handed**
Wood Door Concealed Vertical Rod	**2700 Series - Reversible** **FL2700 Fire Exit Series - Reversible**
Metal Door Concealed Vertical Rod	**2800 Series - Reversible** **FL2800 Fire Exit Series - Reversible**

Delayed Egress - (DE) device provides a controlled egress for openings which require Panic or Fire Exit Hardware for safe egress. It is a self contained exit device which when armed will deny exit to unauthorized personnel for 15 or 30 seconds while simultaneously sounding a local and remote audible alarm. The Remote Monitoring feature will alert the security personnel that an attempt is being made to exit the opening. After the 15 or 30 second Time Delay period the device will function as a standard exit device for safe egress. Available for all wide stile Apex Series Exit Devices except Surface Vertical Rod Device. The Delayed Egress Devices are manufactured and tested to exceed ANSI 156.3 and 156.24 Standard. Devices are UL Listed for category FWAX Special Locking Arrangements and meet all requirements of NFPA 101.

Latchbolt Monitoring - (LS) is available for Rim, Mortise and Vertical Rod Devices. The Latchbolt Monitoring Switch is an internally mounted switch that monitors the position of the latchbolt. The switch can be used to signal a monitoring station or an alarm such as a Precision ALK/ALW Exit Alarm. For the security of the opening a Door Position Switch is recommended.

Touchbar Monitoring - (TS) is available for all Wide Stile Apex Series Exit Devices. The Touchbar Monitoring Switch is an internally mounted switch that is used to signal electromagnetic locks, horns, monitoring stations or other electronic components.

Weatherized Touchbar Monitoring - (WTS) similar to the standard Touchbar Monitoring but designed for use on a variety of exit device applications where contact with the elements may occur.

Double Cylinder - (10 Function) is available for the Rim and Mortise Exit Devices. The inside key cylinder locks or unlocks the outside trim and the outside key cylinder retracts the latch bolt.

Inside Cylinder Lock/Unlock - (10 Function less outside cylinder) is available for the Rim and Mortise Exit Devices. The Inside Key cylinder locks or unlocks the outside Trim. The out side Trim has no cylinder.

1700A
"**A**" Grip

1700B
"**B**" Grip

1700C
"**C**" Grip

2000C
"**C**" Grip

C03
Cast Plate
"Pull by others"

The CVR 2803 with "Pull by Others" must be specified with No. C03 Cylinder Attachment Trim to secure the Rim Cylinder. Specify finish.

1. All Trims are furnished with wrought plates, extruded or cast solid grips.
2. Specify Grip Design (A,B,C) ("A" Grip furnished standard for 1700 Series Trim, "C" Grip furnished standard for 2000 Series Trim)

Retrofit Applications
The 1700 Series Trim is designed to retrofit into other manufacturers' installations when used with the wide stile Apex Series Devices. Consult factory for details.

4900A
"**A**" Lever

4900B
"**B**" Lever

4900C
"**C**" Lever

4900D
"**D**" Lever

4900K
"**K**" Knob

1. All escutcheons and levers are castings or forgings. All levers return to the face of the door with a 1/2″ or less gap, except for the "B" Lever.
2. Specify Lever or Knob Design (A,B,C,D,K) and Handing ("A" Lever RHRB furnished standard.)

V4908A
Vandal Resistant Trim
A heavy duty lever trim designed to with stand abuse and vandalism. Composed of extra strength shock-absorbing "overload" springs and heavy duty investment cast stainless steel internal components. Lever returns to the "home" position eliminating the need to reset the lever.

Retrofit Applications
The 4900 Series Trim is designed to retrofit into other manufacturers' installations when used with the wide stile Apex Series Devices. Consult factory for details.

Trims / ANSI Function

Device Series		01 Exit Only (cover plate)	02 Dummy Trim	03 Key Retracts Latchbolt	05 Key Locks/Unlocks Thumbpiece	08 Key Locks/Unlocks Lever/Knob	10 Double Cylinder Inside Key Locks/Unlocks Lever/Knob	14 No Cylinder Lever/Knob Always Active	15 No Cylinder Thumbpiece Always Active
Rim	2100, FL2100	1701	1702A	1703A	1705A	4908A	4908A	4914A	1715A
SVR	2200, FL2200	2001	2002C	2003C	2005C	V4908A	V4908A		2015C
WDC	2700, FL2700	4901	4902A	4903A					
Mortise	2300, FL2300	1701 2001 4901	1702A 2002C 4902A	1703A 2003C M4903A	M1705A M2005C	M4908A VM4908A	4908A VM4908A	4914A	1715A M2015C
CVR	2800, FL2800	1701 4901	C1702A 4902A	C03 C1703AA 4903A	C1705A	4908A V4908A		4914A	C1715A

- When specifying Exit Device replace the last two digits of device series with the proper function number (e.g. 2108 for a Rim Device with "08" Function).
- Trims are BHMA certified for ANSI 156.3, Grade 1 Standard.
- Trims are through bolted and will cover 161 and 86 cutouts (except for 2000C Trim).
- Cylinder, not furnished standard. Specify when required.

RELIANT – ECONOMY TOUCHBAR DEVICES & TRIMS

The 5000 Series Exit Devices are the choice when an economical and reliable exit device is required. The touchbar and latch mechanism are constructed of solid steel components to achieve consistent and dependable performance for use in various applications. The devices are available as Rim, Surface Vertical Rod and Surface Vertical "Less Bottom Rod". Available with a variety of trim options which allow access from the secure side of an opening. The devices are offered in durable powder coated finishes.

Finishes - 689 Powder Coated Aluminum
- 695 Powder Coated Dark Bronze.

UL Listed - Panic and Fire Exit Hardware. Conforms to UL10C and UBC 7-2.

ANSI/BHMA - Devices are BHMA certified for ANSI 156.3, Grade 1 Standard.

Less Bottom Rod - (LBR) is available for Surface Vertical Rod Exit Devices.

Device Series

Rim	**5100 Series - Non Handed** **FL5100 Fire Exit Series - Non Handed**
Surface Vertical Rod	**5200 Series - Reversible** **FL5200 Fire Exit Series - Reversible**

Options:

Cylinder Dogging - (CD) provides the ability to lock down the touchbar with a key cylinder so the door can be used in the push/pull mode.

Exit Alarm - (ALK: Battery Operated, ALW: Remote Power) provides a simple way to audibly monitor the use of an exit device. The unit contains a Piezo Alarm which is activated when the touchbar is depressed. Alarm sounds at 80db at 10 feet. It is also equipped with an LED indicator. The LED flashes GREEN for 20 seconds when the unit is arming and flashes RED every 20 seconds when the alarm is armed.

Weatherized Exit Alarm - (WALW) similar to the standard Exit Alarm but designed for use on a variety of applications where contact with elements may occur.

501 Wrought Plate

602 Wrought Plate

603 Wrought Plate

702A Wrought Plate Extruded Grip

703A Wrought Plate Extruded Grip

802A Cast Escutcheon and Lever

814A Cast Escutcheon and Lever

1. Trims are BHMA certified for ANSI 156.3, Grade 1 Standard.
2. Trims are through bolted and will cover 161 cutouts.
3. Cylinder, not furnished standard. Specify when required.

Trims / ANSI Function

Device Series		01 Exit Only (cover plate)	02 Dummy Trim	03 Key Retracts Latchbolt	08 Key Locks/Unlocks Lever/Knob	14 No Cylinder Lever/Knob Always Active
Rim	5100, FL5100	501	602A	603A	808A	814A
SVR	5200, FL5200					

- When specifying Exit Device replace the last two digits of device series with the proper function number (e.g. 2108 for a Rim Device with "08" Function).

The Olympian series demonstrates proven durability in a traditional crossbar style device. Cold drawn active case covers conceal rugged components machined to fine tolerances. Consistent reliability and security are assured. Simple installation, minimal maintenance and classic lines are the hallmarks of these traditional devices.

Finishes - 605, 606, 612, 613, 625, 628, 630. For Finish description see page 2.

Device Series

Rim	**100**	**Series - *Handed***
	R100	**Series - *Reversible***
	FL100	**Fire Exit Series - *Handed***
	FLR100	**Fire Exit Series - *Reversible***
Surface Vertical Rod	**200**	**Series - *Non Handed***
	FL200	**Fire Exit Series - *Non Handed***
Mortise	**300**	**Series - *Handed***
	FL300	**Fire Exit Series - *Handed***

UL Listed - Panic and Fire Exit Hardware. Conforms to UL10C and UBC 7-2.

ANSI/BHMA - Devices are BHMA certified for ANSI 156.3, Grade 1 Standard.

Less Bottom Rod - (LBR) is available for Surface Vertical Rod Exit Devices.

1700A "**A**" Grip | **1700B** "**B**" Grip | **1700C** "**C**" Grip | **2000C** "**C**" Grip

4900A "**A**" Lever | **4900B** "**B**" Lever | **4900C** "**C**" Lever | **4900D** "**D**" Lever | **4900K** "**K**" Knob

V4908A Vandal Resistant Trim

The V4908A is a heavy duty lever trim designed to withstand abuse and vandalism. It is composed of extra strength shock-absorbing "overload" springs and heavy duty investment cast stainless steel internal components. The lever returns to the "home" position eliminating the need to reset the trim.

1. All Trims are furnished with wrought plates, extruded or cast solid grips.
2. Specify Grip Design (A,B,C) ("A" Grip furnished standard for 1700 Series Trim, "C" Grip furnished standard for 2000 Series Trim)

1. All escutcheons and levers are castings or forgings. All levers return to the face of the door with a 1/2″ or less gap, except for the "B" Lever.
2. Specify Lever or Knob Design (A,B,C,D,K) and Handing ("A" Lever RHRB furnished standard).

Trims / ANSI Function

Device Series		01 Exit Only (cover plate)	02 Dummy Trim	03 Key Retracts Latchbolt	05 Key Locks/Unlocks Thumbpiece	08 Key Locks/Unlocks Lever/Knob	14 No Cylinder Lever/Knob Always Active	15 No Cylinder Thumbpiece Always Active
Rim	100, FL100	1701	1702A	1703A	Y1705A	Y4908A	Y4914A	Y1715A
	R100, FLR100	2001	2002C	2003C	Y2005C	VY4908A		Y2015C
SVR	200, FL200	4901	4902A	4903A				
Mortise	300, FL300	1701	1702A	1703A	M1705A	M4908A	4914A	1715A
		2001	2002C	2003C	M2005C	VM4908A		M2015C
		4901	4902A	M4903A				

- When specifying Exit Device replace the last two digits of device series with the proper function number (e.g. 2108 for a Rim Device with "08" Function).
- Trims are BHMA certified for ANSI 156.3, Grade 1 Standard.
- Trims are through bolted and will cover 161 and 86 cutouts (except for 2000C Trim).
- Cylinder, not furnished standard. Specify when required.
- Trim No.s with prefix "Y" are for Olympian Rim and Surface Vertical Rod Devices only.

ARM–A–DOR® RIM EXIT DEVICES

Features

Three Products in One
- Locking Bar Security
- Panic Exit Device with UL listing U.S. and Canada
- Loss Prevention Alarm (when alarm equipped)

Drop Bar Security
- Provides resistance to forced entry attacks per UL1034 standard
- Locking members extend 1 1/2″ over frame on each side

Code Conformance
- UL1034 Forced Entry
- UL 305 Panic Device Rating
- UL 10B, Fire Exit Hardware, 3 hrs. at 2000° F
- Dade County (Florida) Product Control Approved (Hurricane)
- NFPA 101 Life Safety Code
- UBC/BOCA
- ANSI 156.3
- City of New York, Dept. of Buildings, MEA 292-96-E

Works with ANY Security System
- Alarm operated by standard or interchangeable core mortise cylinder
- Optional remote switch operates timed delay egress systems, cameras or other alarms

Alarmed Models
- Battery operated – approx. 1-yr. life; two 9-Volt batteries included
- Low battery audible warning signal
- Loud alarm, 1 horn; 95 db @ 10 ft.
- Tamper Alarm
- Nuisance Alarm
- Re-arm reminder feature
- Optional AC adapter or hardwire kits
- Optional delay arming feature

Flexible Installation
- Quick Install models with pre-assembled 36″ and 48″ units
- Easy to follow six-step installation instructions
- Retrofit or new construction work
- Non-handed
- Fits doors 36″ to 48″ wide
- Double-door applications work on fixed or removable center mullions or without mullion
- No special door preparation
- Works on any door or frame
- Shipped with required hardware for standard single door applications

Relocking Choices
- Automatic or manual models

Mechanical Efficiency and Durability
- Roller design deadbolt means reduced friction and wear
- Touch-bar operates with straight push-through motion
- Weather and water resistant

COMPLETE PRODUCT ASSEMBLIES

Product Number	Description	*Alarm	Fits Door Widths	Fits Jambs Up To	Finish
A101-001	Automatic Re-Lock	No	3′ to 4′	6 3/4″	US28/628
A101-002	Automatic Re-Lock	Yes	3′ to 4′	6 3/4″	US28/628
A101-F01	Automatic-Fire Rated	No	3′ to 4′	6 3/4″	US28/628
A101-F02	Automatic-Fire Rated	Yes	3′ to 4′	6 3/4″	US28/628
A101-012	36″ Automatic Re-Lock	No	3′ ONLY	5 3/4″ ONLY	US28/628
A101-013	36″ Automatic Re-Lock	Yes	3′ ONLY	5 3/4″ ONLY	US28/628
A101-014	48″ Automatic Re-Lock	No	4′ ONLY	5 3/4″ ONLY	US28/628
A101-015	48″ Automatic Re-Lock	Yes	4′ ONLY	5 3/4″ ONLY	US28/628
A102-001	Manual Re-Lock	No	3′ to 4′	6 3/4″	US28/628
A102-002	Manual Re-Lock	Yes	3′ to 4′	6 3/4″	US28/628

Optional Kits

A103-003	Alarm Sub-Assembly
A103-002	RX Switch (For wiring to existing systems – one individual kit)
A104-001	Low Profile Installation Kit (For door jambs greater than 6 3/4″ up to 12 3/4″)
A106-001	Standard Double Door Kit (For door jambs up to 6 3/4″)
A106-002	Low Profile Double Door Kit (For door jambs greater than 6 3/4″)
A107-001	A/C Adapter Kit (For plug in with battery backup)
A107-002	A/C Adapter Hardwire Kit (For wiring to electrical system with battery backup)

Deadbolts

1881-003	Sliding Deadbolt with Padlock Locking Hasp & Strike
1883-003	Sliding Deadbolt Keylocking with Strike

* Alarm Models A101-002, A101-013, A101-015, A102-002 and A101-F02 require two 9-volt batteries (included) and a standard 1-1/8″ mortise cylinder with straight cam (not included).

Stanley Security Solutions, Inc.
6161 E. 75th Street Indianapolis, Indiana 46250
www.stanleysecuritysolutions.com
© 2007 Stanley Security Solutions, Inc. and Stanley Logistics

10M 1107
PHI011