STANLEY®
Security Solutions

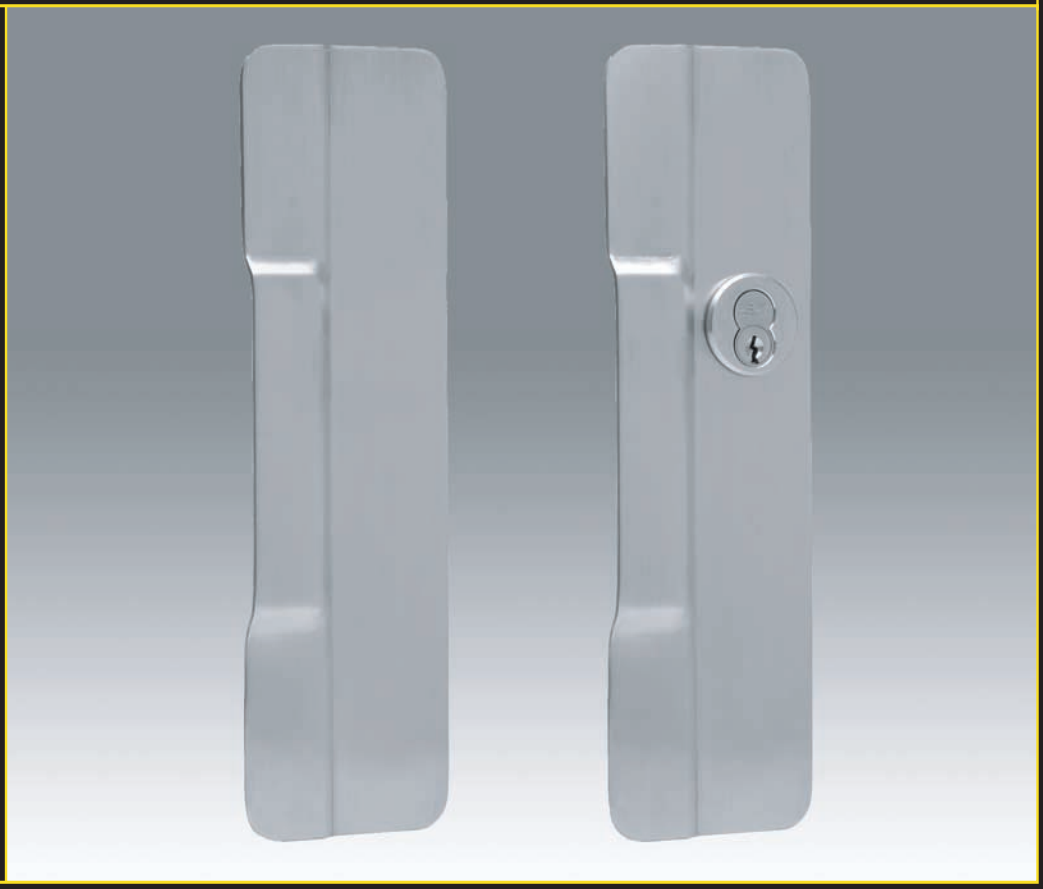

ACCESSORIES

DOOR ACCESSORIES

STANLEY
phi™

PRECISION HARDWARE

TABLE OF CONTENTS

PLATES	Page
Strike Filler Plates	3
Lock Front Filler Plates	3
Hinge Filler Plates	4
Cover & Conversion Plates	5

LOCK GUARDS	Page
Standard Line Lock Guard	6
Narrow Line Shorth Length Lock Guard	7
Narrow Line Standard Length Lock Guard	7

Introduction

In addition to manufacturing high quality Exit Devices, Precision Hardware also offers a variety of accessory hardware to fill your security solution needs. These accessories include Lock Guards, Filler and Conversion Plates. Additional information for each respective application is available within this brochure.

Sales Policy

PAYMENT TERMS: 2% 10th Prox., net 30th.

PRICES: Prices are list and subject to change without notice. All Prices are in U.S. Dollars. All orders will be filled at prices in effect at time of shipment.

FREIGHT ALLOWANCES: All shipments are F.O.B. factory via the carrier we select. Goods in transit are at the risk of the buyer.

FULL FREIGHT ALLOWED: Prepaid on net invoice of $6,000.00 or more at one time to one location. These freight terms apply only to destinations within the continental United States, excluding Alaska and Hawaii.

DELIVERY: We endeavor to make prompt shipment of all orders, but we shall not be held responsible for any loss or damage resulting from delay in filling orders due to causes beyond our control, including delivery of material to us.

RETURNED GOODS: All materials returned to PRECISION, for any reason, must have a Return Goods Authorization (RGA) number applied to the outside of the shipping carton. A basic charge of 30% of the purchase price will be made to cover inspection and repacking. Further charge may be made at our discretion contingent on the condition of saleability of the merchandise at our inspection. Transportation charges of returned goods must be prepaid by the customer. All goods must be returned within 60 days of RGA issue date.

CLAIMS: All claims due to errors or defects must be submitted, in writing, within 30 days after receipt of goods. When we are responsible, adjustment will be made.

BACK CHARGES: Neither purchaser or an affiliated company or assignee shall have the right to claim compensation or to back charge against any amounts which become payable to the Company under this contract or otherwise.

CANCELLATIONS: After orders are entered for manufacturing, cancellations cannot be accepted without our permission, and may be subject to a cancellation charge.

SAMPLES: Samples will be charged at regular price whether mounted or unmounted. Charges for mounting samples will be priced at cost.

MINIMUM CHARGE: The expense of handling small orders necessitates a minimum charge of $25.00 net per invoice.

ORDERS: The home office at Romulus reserves the right to decline orders in which the price or quantity of goods is not satisfactory. The Company will not be bound to fill any orders unless or until they have been accepted at the home office.

PHONE ORDERS: Accuracy of phone orders will be determined by receipt of a written confirmation or acceptance of our acknowledgment, if time permits. If time does not permit for either confirmation or acknowledgment, the order stands correct as shipped.

Touchbar Clearance

1. PRECISION mechanical products are warranted against defects in material and workmanship for a period of **FIVE YEARS** from the date of invoice.
2. This warranty does not cover defects or damage arising from failure to perform normal maintenance, faulty installation, ordinary wear and tear, misuse, abuse, freight damage, application for which the product was not designed, or incorrect or improper wiring of electrical products.
3. Claims under this warranty must be made in writing to PRECISION. At its option, PRECISION will repair the defect, replace the product, or issue credit at the net value originally invoiced. PRECISION liability shall in no event exceed the net cost of the product.

REPAIR, REPLACEMENT OR CREDIT AS PROVIDED UNDER THIS WARRANTY IS THE EXCLUSIVE REMEDY OF THE CONSUMER. PRECISION HARDWARE, INC. SHALL NOT BE LIABLE FOR ANY INCIDENTAL OR CONSEQUENTIAL DAMAGES FOR BREACH OF ANY EXPRESS OR IMPLIED WARRANTY ON THIS PRODUCT. EXCEPT TO THE EXTENT PROHIBITED BY APPLICABLE LAW, ANY IMPLIED WARRANTY OF MERCHANTABILITY OR FITNESS FOR A PARTICULAR PURPOSE ON THIS PRODUCT IS LIMITED IN DURATION TO THE DURATION OF THIS WARRANTY. WE ARE NOT RESPONSIBLE FOR ANY CHARGES FOR LABOR OR MATERIALS INCURRED BY OTHERS WITHOUT OUR PRIOR WRITTEN CONSENT.

Some states do not allow the exclusion or limitation of incidental or consequential damages, or allow limitations on how long an implied warranty lasts, so the above limitations or exclusion may not apply to you. This warranty gives you specific legal rights, and you may also have other rights which vary from state to state.

STRIKE FILLER PLATES - *For Frames*
Plates to fill cutouts in metal door frames for Strikes

286S

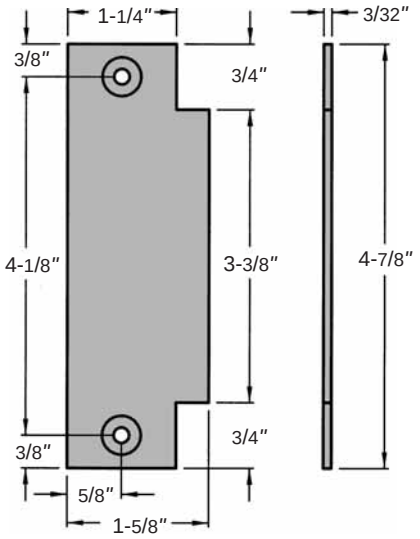

160S

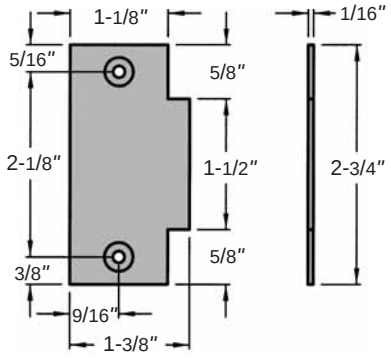

161S

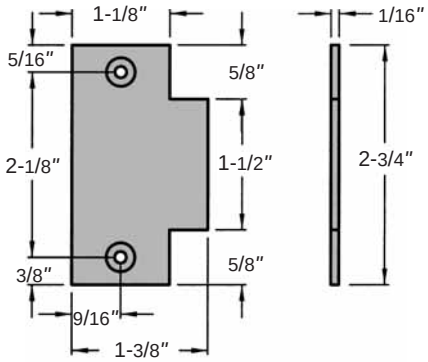

LOCK FRONT FILLER PLATES - *For Frames*
Plates to fill cutouts in metal doors for Locks

160F

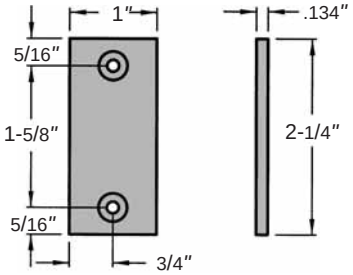

86F

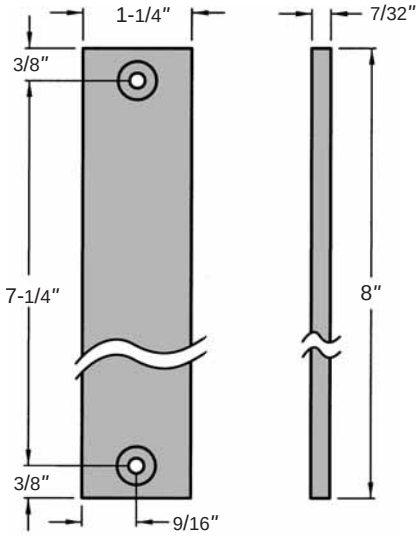

161S

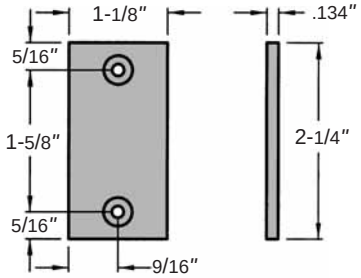

SCREW SCHEDULE - *For all plates shown*

	No. 8-32 x 1/2"		No. 8-32 x 1/2"
All screws F.H. (undercut)	160F	161F	86F
Steel M.S. (phillips head)	160S	161S	86F

DISCOUNTS:

- Plates are furnished primed for paint 600
- Plates are drilled and countersunk and furnished with screws.
- **Minimum** ordering quantity is (**25**) of each plate.
- Discount on filler plates: 25 to 99 .....50%
  100 to 499 .....50-10%
  500 and over 50-20%

FILTER PLATES – Door and Frame

HINGE FILLER PLATES

Plates to fill cutouts in metal doors for Butt Hinges

2145F - For 1-3/4″ Frames

2145D - For 1-3/4″ Doors cut thru for reversibility.

2145-1/2D - For 1-3/4″ Doors not cut thru and handed

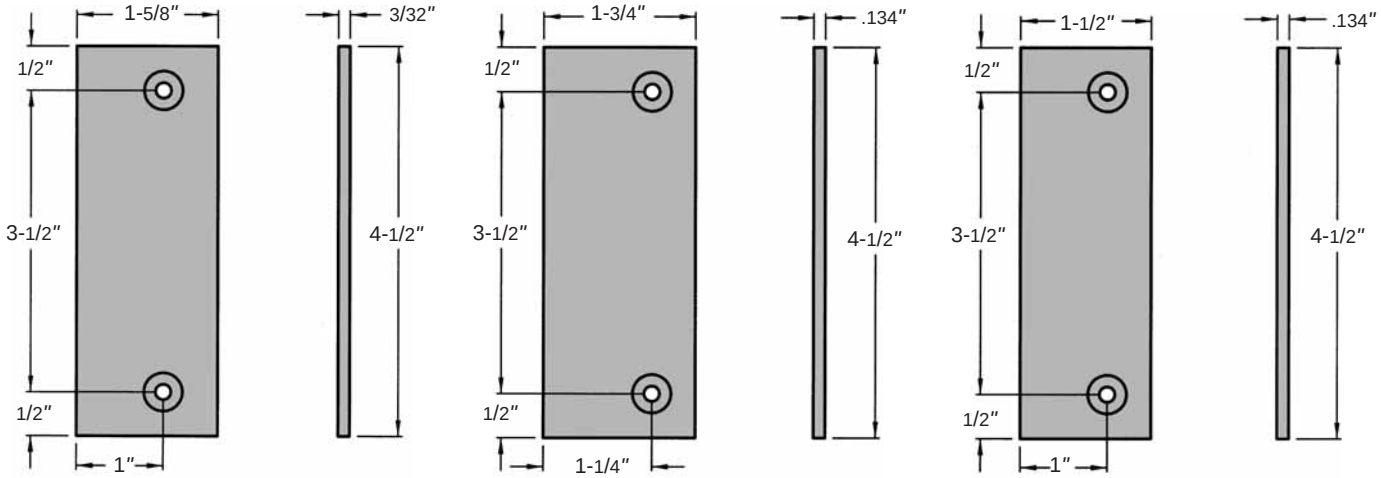

SCREW SCHEDULE - *For all plates shown*

	No. 12-24 x 1/2″
All screws F.H. (undercut)	2145D
Steel M.S. (phillips head)	2145F
	2145 – 1/2D

DISCOUNTS:

- Plates are furnished primed for paint 600
- Plates are drilled and countersunk and furnished with screws.
- **Minimum** ordering quantity is (**25**) of each plate.
- Discount on filler plates:
  - 25 to 99 .....50%
  - 100 to 499 .....50-10%
  - 500 and over 50-20%

No. 1610

For 160 and 161 Cylindrical Lock cutouts.

- Fits 1-3/8″ and 1-3/4″ doors
- Fits all door manufacturers standard cutout for 160 and 161 ASA cylindrical locks
- Indents at 3 and 9 o'clock prevent the outside plate from being palmed off
- 18 gage steel
- 2-5/8″ diameter with welded stud
- Primed for paint
- Minimum order (25)

Quantity

25 (minimum order)
50
100
500
1000

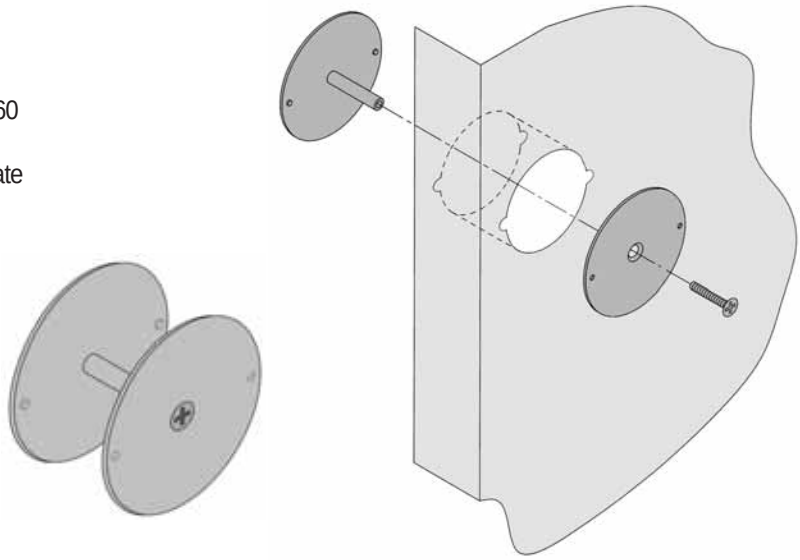

No. 1861

- Fits standard 86 Hollow Metal door machining to allow the door to accept 160 and 161 cylindrical lock body
- Furnished with (2) #12-24 x 1/2″ Machine Screws
- Steel – primed for paint

No. 1862

- Fits standard 86 Hollow Metal door machining to allow the door to accept 4-7/8″ x 1-1/4″ strike (ANSI A115.2) for cylindrical or mortise locks
- Furnished with (2) #12-24 x 1/2″ Machine Screws
- Steel - primed for paint

No. 1863

- Fits No. 140 Sargent Integralock machining to allow the door to accept 160 and 161 cylindrical lock body
- Furnished with (2) #10-24 x 1/2″ Machine Screws
- Steel – primed for paint

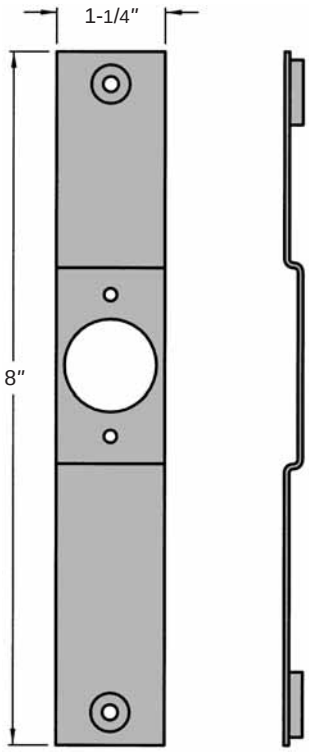

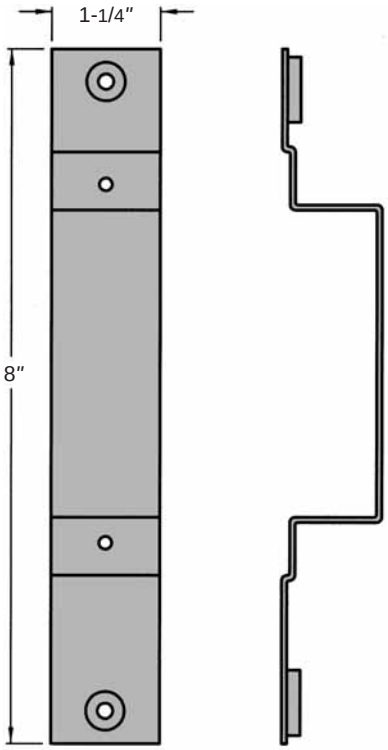

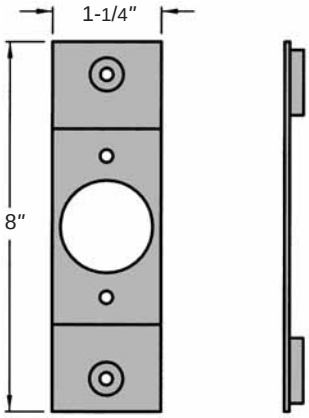

DISCOUNTS:

- Plates are drilled and countersunk and furnished with screws.
- **Minimum** ordering quantity is (**25**) of each plate..
- Discount on filler plates:
  25 to 99 .....50%
  100 to 499 .....50-10%
  500 and over 50-20%

LOCK GUARDS

The Precision Hardware Lock Guard prevents the picking or forcing of a latch type lock.

The Federal Government and many cities have laws covering commercial and residential property insurance requiring owners to assume responsibility for protecting their own property.

Insurance Companies authorized to write Burglary and Robbery Policies require that each exterior door must be equipped with locks protected by metal (Lock Guard) covering the opening between the door and its frame at the point where the bolt or latch enters the frame so as to prevent the insertion of tools to exert pressure against the bolt or latch.

For a slight cost and easy installation, you can protect property against burglary by using a Lock Guard.

- Heavy Gauge Stainless Steel - non-handed (except 1625-AR)
- Hydraulic Press formed for extra strength
- Maximum security for out swinging doors and doors with Electric Strikes

Standard Line For rose or escutcheon that are 2-3/4″ wide or less.

1625
- 2-1/2″ wide x 10″ long
- Stainless Steel 18-8 type
- Satin finish 630
- Concealed fasteners (as illustrated)

1627
- 2-1/2″ wide x 10″ long
- Cold rolled steel
- Finish is primed for paint
- Concealed fasteners

1625 AR*
- 2-1/2″ wide x 10″ long
- Stainless Steel 18-8 type
- Satin finish 630
- Two concealed fasteners are used to accommodate the Adams-Rite latch
- Cut for cylinder, for tubular aluminum doors
- Handed, specify as LHRB or RHRB

1627 AR*
- 2-1/2″ wide x 10″ long
- Cold rolled steel
- Finish is rust proofed - Duranodic
- Concealed fasteners
- Cut for cylinder
- Handed, specify as LHRB or RHRB

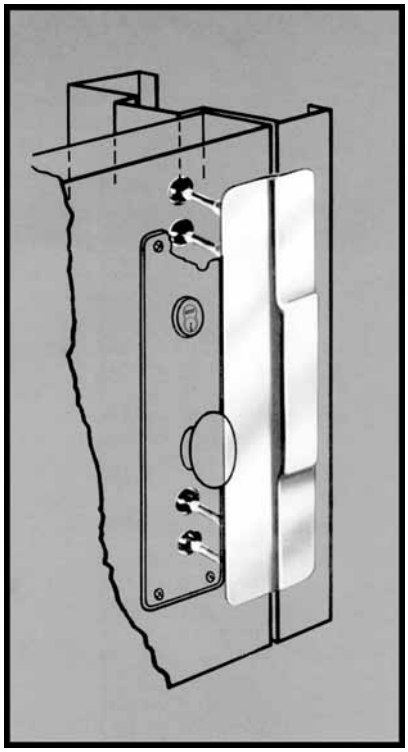

No. 1625

No. 1625 AR

DISCOUNTS:

- Packed (5) Lock Guards per carton. Weight 5 lbs. per carton.
- **Minimum** ordering quantity is (**5**) Lock Guards of any type.
- Quantity discounts: 5 to 99 ..... 50%
  100 and over 50-10%

* Handed. When ordering specify hand of Lock Guard.

For Doors with Wide Roses, Escutcheons or Plates

- Provides Security for Life and Property.
- Guards either latch or dead bolt from tampering or jimmying.
- Offset to allow for insert of door in frame.
- For all Mortise and Cylindrical Locks.
- Offset to allow for lip clearance of lock strike plate. May be shimmed for extra clearance.
- Affords maximum protection against picking of locks equipped with Electric Door Releases.
- Discourages Vandalism.

Narrow Line Short Length — For all Cylindrical Locks - 161 Type and Unilock, Mono and Sargent Integralocks®.

1625 SL

- 1-1/2″ wide x 6″ long
- Stainless Steel 18-8 type
- Satin finish 630
- Concealed fasteners (as illustrated)
- SL – Short Length has two thru bolts

1627 SL

- 1-1/2″ wide x 6″ long
- Cold rolled steel
- Finish is primed for paint
- Concealed fasteners
- SL – Short Length has two thru bolts

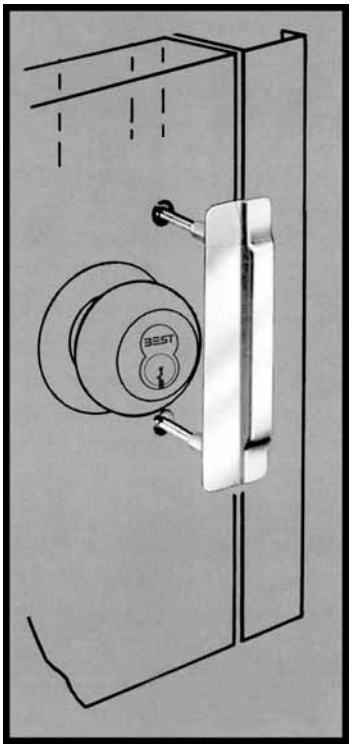

No. 1625 SL

Narrow Line Standard Length — For rose or escutcheon that are 3-1/2″ wide or less. For Mortise Locks - Type 86 or Cylindrical Locks - Type 161

1625 NL

- 1-1/2″ wide x 6″ long
- Stainless Steel 18-8 type
- Satin finish 630
- Concealed fasteners

1627 NL

- 1-1/2″ wide x 6″ long
- Cold rolled steel
- Finish is primed for paint
- Concealed fasteners

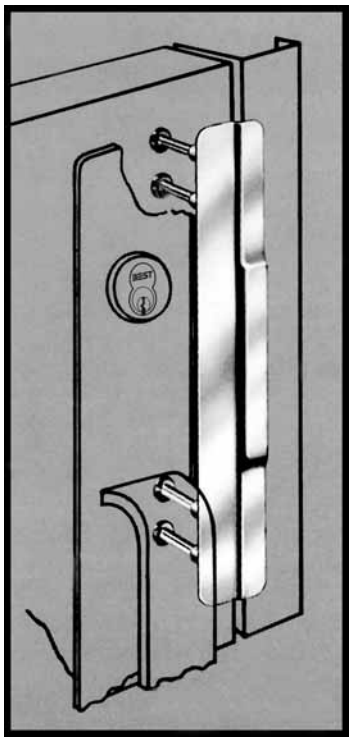

No. 1625 NL

DISCOUNTS:

- Packed (5) Lock Guards per carton. Weight 5 lbs. per carton.
- **Minimum** ordering quantity is (**5**) Lock Guards of any type.
- Quantity discounts: 5 to 99 ..... 50%
  100 and over 50-10%

PRECISION HARDWARE

For more information on Stanley Security Solutions' products, services, and office locations visit our web site at www.stanleysecuritysolutions.com

Product information contained in this catalog has been compiled and presented with as much care and completeness as is reasonably possible. Errors or mistakes may be present, and in many cases, reliance has been placed on information supplied by other manufacturers which may be in error or which may be subject to changes or modifications by the manufacturer without notice and without obligation. Therefore, no guarantee can be made or should be assumed or implied with regards to product information contained in this catalog.

STANLEY®

Security Solutions

Stanley Security Solutions, Inc.
6161 E. 75th Street Indianapolis, Indiana 46250
www.stanleysecuritysolutions.com
© 2007 Stanley Security Solutions, Inc. and Stanley Logistics

7.5M 1107FP
PHI009