Norton®

Since 1880 • The American Original™

78B/F Series Traditional Door Closers

An ASSA ABLOY Group company

ASSA ABLOY

OVERVIEW

Introduction

The Norton Series 78B/F Traditional Surface Closers represent a combination of traditional styling and modern closer features. All closer sizes are contained within a single size aluminum alloy shell. Templates for installing this closer are the same for all closer sizes.

In addition only two springs are needed to accommodate the complete range of door sizes. One clock spring is adjustable to meet the closing force requirements for closer sizes 2, 3, and 4. One other larger spring can be adjusted to meet the closing force for closer sizes 5 and 6. Both springs are powerful enough to provide an additional 50% power increase over the minimum closing force for the largest size in their range; i.e. 50% over size 4 and 50% over size 6.

These Norton Traditional Surface Closers have an unusual ability to accommodate power adjustment to their environment. The adjustable clock coil spring provides a small incremental increase or decrease through a wide range of closer power. They can be adjusted to meet the exact power requirements of the installation. Sweep speed, latch speed and backcheck cushioning can also be adjusted to door, frame and variable conditions.

Table of Contents

Overview 2-3
Compliance Standards and Specifications 3
Fasteners and Finishes 4
How to Order 4
Features 5
Applications 6-7
Technical Details 8-11
Accessories 12-18
Parts List 19-22

Norton®

OVERVIEW

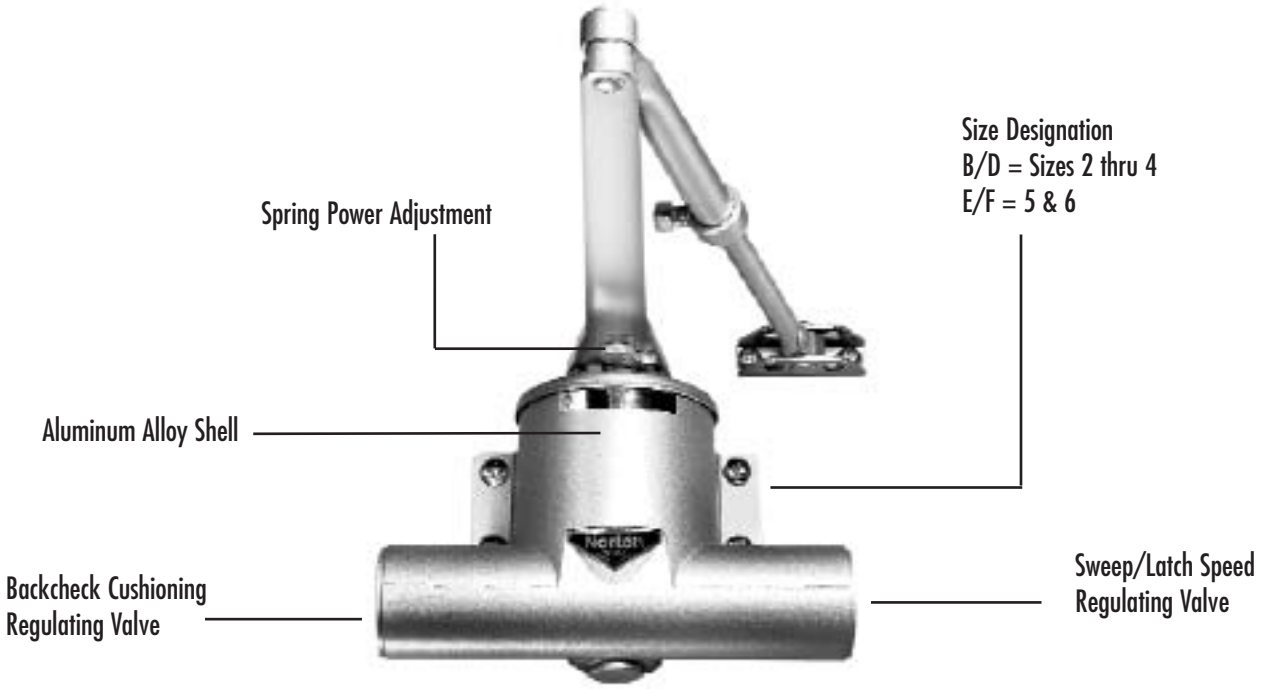

COMPLIANCE STANDARDS

All 78B/F Series closers comply with ANSI A156.4 Grade 3 Specifications. UL All Norton® series 78B/D closers with non-hold open arms are listed by Underwriters Laboratories for labeled fire doors. This includes compliance to UL10C and UBC-72 (1997) for 3-hour assemblies. The product is manufactured in an ISO 9001 facility. These closers are also listed by the New York City Materials and Equipment Acceptance Division.

SPECIFICATIONS

Closer for interior (and) exterior doors shall be rack-and-pinion type enclosed in a cast aluminum alloy shell. Closer spring shall be clock-type coil spring and shall be adjustable through a wide range of closing power. Closer fluid shall maintain lubricity and anti-oxidation agents. Closer fluid shall maintain stable viscosity to allow door closer to perform in temperatures ranging from extrememly high to as low as -40˚F. Closer shall be equipped with a single hex-key-operated regulating valve for control of both closing and latch speeds. Closer shall have adjustable backcheck. Closer shall be Norton® Series 78B/F Traditional Surface Closer or equivalent.

HOW TO ORDER

UNI -Unitrol Arm
(specify door width)

MULTI-SIZE
B/D – Spring Size 2 thru 4
E/F – Spring Sizes 5 & 6

RA – Regular Arm
HA – Regular Arm, hold open
PA – Parallel Arm
PHA – Parallel Arm, hold open
PRA – Parallel Rigid Arm, non-hold open
PRHA – Parallel Rigid Arm, hold open
H – Hold Open – Unitrol arm only
DA – Delayed Action – Regular arm only

UNI	78	B/D	H	RH	689
PREFIX	CLOSER SERIES	POWER SIZE	SUFFIX	HAND	FINISH (see below)

FASTENERS

Fasteners

All closers are shipped with self-drilling sheet metal screws and machine screws.

- PR and UNI arms also have sleeve nuts as part of the standard screw packs.
- Sleeve nuts (SN) are available for all closers and should be used on steel doors to prevent dimpling, or where proper door reinforcement has not been provided.
- Standard sleeve nuts are for 1-3/4" (44mm) doors. 1-3/8" (35mm) or 2-1/4" (57mm) door thicknesses are available and must be specified.
- Through-bolts and grommet nuts (TBGN) are another fastener alternative for wood doors. Specify door thickness 1-3/4" (44mm), 1-3/8" (35mm), or 2-1/4" (57mm) when ordering.

Note: Other types of fasteners may be available to special order. Consult the Norton factory for availability and the door and frame manufacturer for compatability with your application.

FINISHES

Available Finishes

All door closers are painted in water-borne acrylics. All steel parts, arms, bracket and mounting plates are powder coated. The closers will withstand 120 hours of salt spray.

Sprayed Finishes

Description	Specify Norton (BHMA) Designation	Complements the following finishes	Old Norton Designation
Aluminum	689	628, 625, 629, 630, 651, 652	AL
Statuary Bronze	690	640, 613	STAT
Dull Bronze	691	612, 637, 639	DB
Black	693	315	315
Medium Amber	694	313	312
Gold	696	605, 606, 632, 633	GB

FEATURES

Aluminum Alloy Shell: Norton closer shells are constructed of a special aluminum alloy, carefully selected to accommodate individual closer characteristics and operating conditions.

Adjustable Spring Power: Clock-type coil spring affords a wide range of closer power. Permits a fine adjustment of the closer to the environment.

Rack & Pinion Operation: Provides a smooth transmission of power for control of the door through its full opening and closing cycle.

Adjustable Sweep/Latch Speed: A dual purpose regulating valve, hex-key-operated, permits independent adjustment of both sweep and latch speed.

Adjustable Backcheck Cushioning: An independent regulating valve, hex-key-operated, provides an adjustable hydraulic cushion to the door opening speed toward the end of the opening cycle. This feature is standard with all but Delayed Action closers. Backcheck is not available with Delayed Action closers.

Non-Hold Open Arm: Standard closer will be supplied with a non-hold open arm. This arm is non-handed.

Hold Open Arm: Closer arm has adjustable hold open feature (90° to 180°). This arm is non-handed for regular arm application only. It is handed for all parallel arm installations. Order by suffixing "HA" to the Model Number.

Warranty: Limited ten-year warranty for defects and life of the building on the aluminum housing.

Field Reversible: Closer spring can be field-reversed to accommodate the hand of the door. It is recommended that wherever possible the closer be ordered handed. Parallel Hold Open arms and Delayed Action closers are not reversible.

Closer Fluid: NorGlide™ closer fluid is a specially formulated multi-viscosity hydraulic fluid that contains lubricity and anti-oxidation agents that provide optimum performance and efficiency. This fluid complements the interaction of the door closer's aluminum housing with its steel and zinc components, while maintaining stable viscosity to allow the door closer to perform in temperatures ranging from extremely high to as low as - 40° F.

OPTIONAL FEATURES DELAYED ACTION

Adjustable Delayed Action Closing*
An optional hydraulic feature that adds a third speed range to the closing cycle. This feature becomes effective when the door is opened and released at any point beyond 70°. The amount of time delay depends upon the combination of the angle of door release and valve adjustment. The valve can be adjusted with a 1/8" (3mm) hex key from no delay time up to maximum delay times of:

Door Opened and Released at	Approximate Time of Delay Cycle
180°	4-5 minutes
120°	2-3 minutes
90°	25-30 seconds

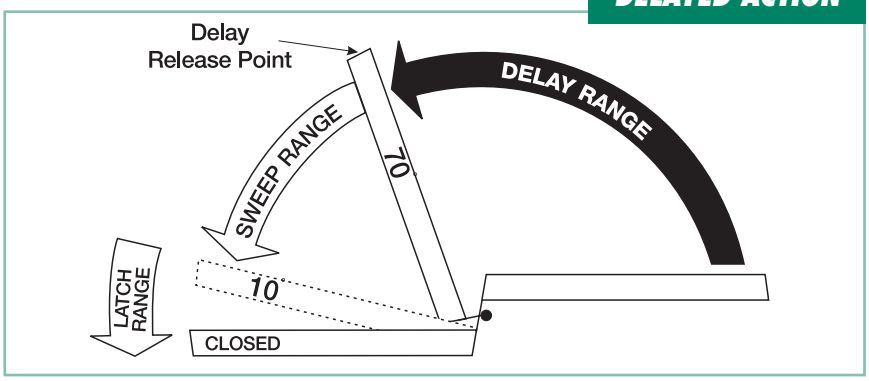

Suggested Applications
Delayed Action closing allows slow-moving traffic to clear the opening before the door closer's normal closing cycle begins. This feature can be helpful in health care facilities such as hospitals and nursing homes. It provides sufficient time for persons on crutches or in wheelchairs to pass through a door without concern of it closing. At the same time, it can accommodate the facility's staff with movement of food service carts, beds, and other wheeled traffic. Use of delayed action closers on many doors throughout industrial and commercial buildings can also assist the flow of traffic. Locations where additional time to clear the opening is advantageous are doors between office and factory/warehouse facilities, doors to workshops or laboratories, to kitchen and food processing areas... to list just a few.

*Note: Regular arm (NHO units only) are handed - not reversible

APPLICATIONS

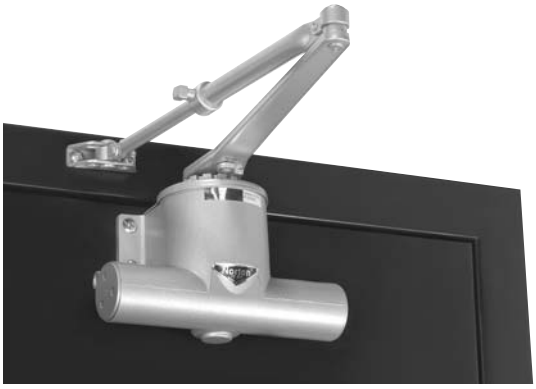

Regular Arm

This is the only pull-side application where a double lever arm is used. It is the most power efficient application for a door closer. Sufficient frame, door and/or ceiling clearance must be considered. Since the arm assembly projects directly out from the frame, this application may present an aesthetics issue or be prone to vandalism.

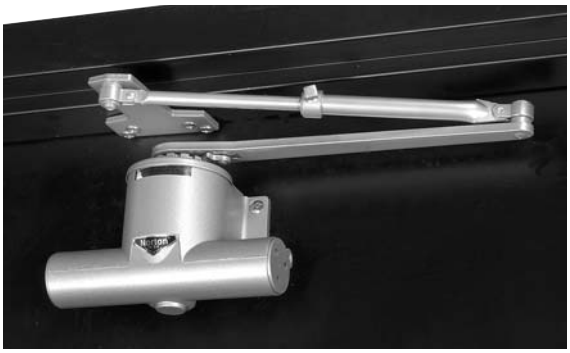

Parallel Arm

This application provides the most appealing design appearance for a surface-mounted door closer having a double lever arm. This also makes it beneficial in vandalism-prone areas. It is on the push side of the door and the arm assembly extends almost parallel to the door. In the closed position, there is very little or no hardware projecting beyond the frame face in most situations.

Due to the geometry of the arm it is approximately 25% less power efficient than a regular arm application.

The entire closer and arm assembly are mounted below the frame stop, requiring a top rail clearance on the door of between 6-5/8″ (168mm), when using a low profile arm, to 7-1/4″ (184mm), when using the hold open arm.

Parallel Rigid Arm

An enhanced variation of the standard parallel arm assembly that is intended for use in heavy traffic areas where

auxiliary door stops are installed. Hold open available - specify hand when ordering.

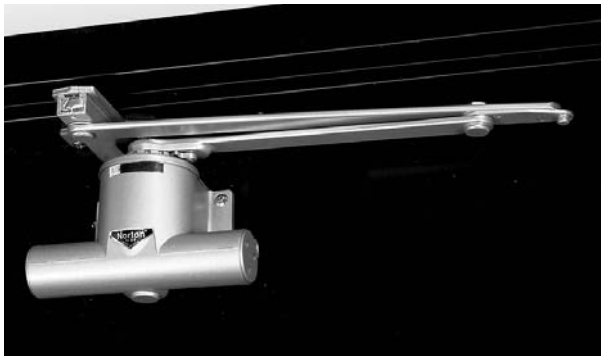

Unitrol® Arm (Parallel Arm applications only)

Unitrol arms combine the features of a double lever arm overhead door stop/holder with the backcheck feature of the door closer to reduce door stopping shock loads to a minimum. They use a compression spring buffer at the soffit plate/arm shoe that will absorb 30 lbs. of force, 5° prior to the door's dead stop. Coupled with the door closer's backcheck feature, this is the most controlled stop available with a surface door closer.

There are three different length arm assemblies. Each length is designed for a specific range of door widths to provide precise door control. This further lessens the dead stop impact on the door's hinges/pivots.

REGULAR ARM

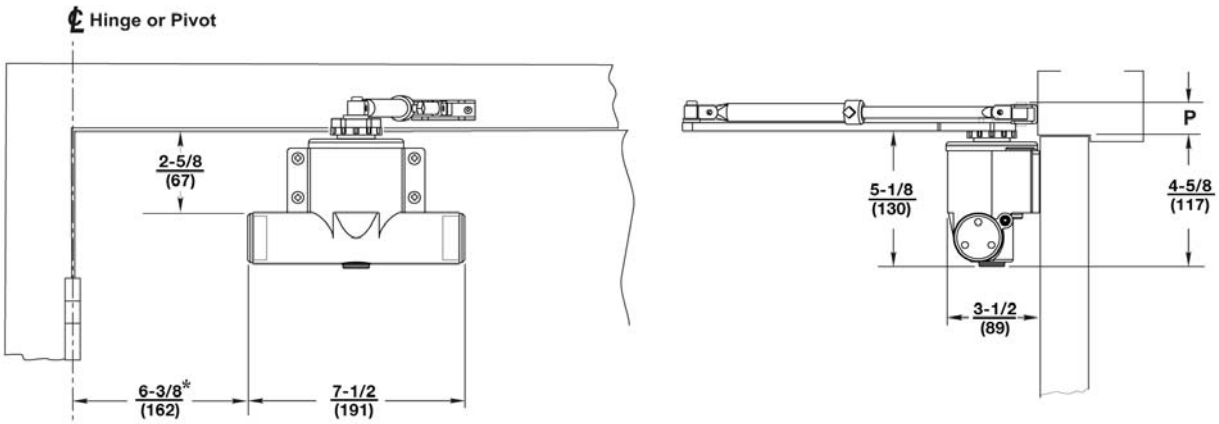

* Template position for 100° door opening

Maximum Door Size Wood or Metal Inches (cm)		Model Number		Dimensional Information Shown In Inches (mm)	
				P Minimum Ceiling Clearance	
Interior	Exterior	Non-Hold Open	Hold Open	Non-Hold Open	Hold Open
48″ (122)	36″ (91)	78B/D-RA	78B/D-HA	1-1/2″ (38)	2-1/8″ (54)
–	44″ (112)	78E/F-RA	78E/F-HA		

All dimensions are for reference only. Door sizing information is based on installation on standard weight doors, 7'0" (213 cm) high 1-3/4" (44 mm) thick; hung on anti-friction hinges and operating under normal conditions.

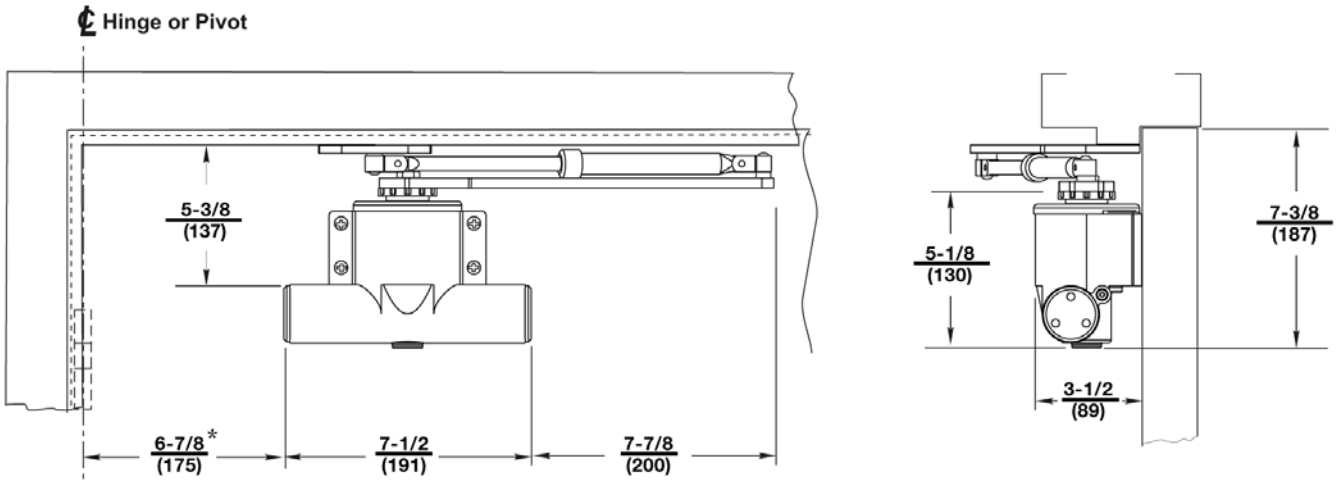

* Template position for 130° door opening

Maximum Door Size Wood or Metal Inches (cm)		Model Number	
Interior	Exterior	Non-Hold Open	Hold Open
42″ (107)	36″ (91)	78B/D-PA	78B/D-PHA
–	44″ (112)	78E/F-PA	78E/F-PHA

All dimensions are for reference only. Door sizing information is based on installation on standard weight doors, 7'0" (213 cm) high 1-3/4" (44 mm) thick; hung on anti-friction hinges and operating under normal conditions.

PARALLEL RIGID ARM

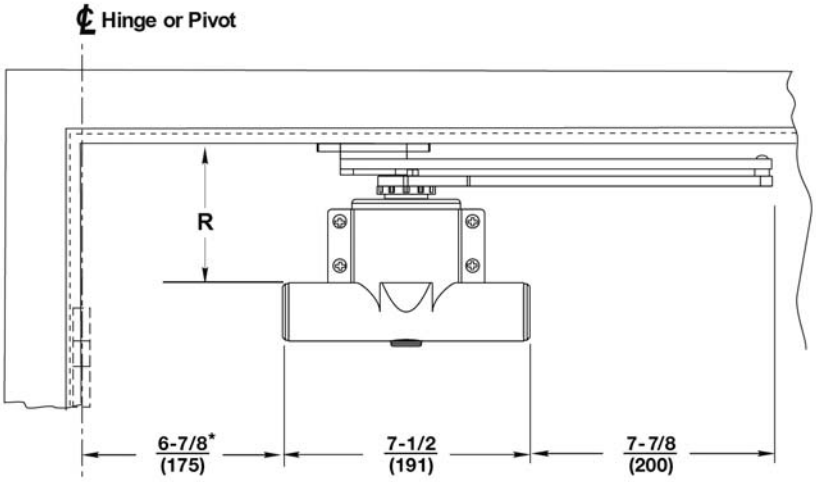

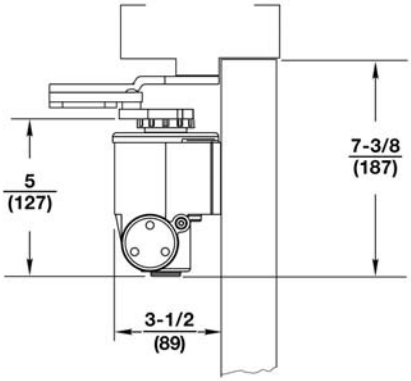

* Template position for 130° door opening

Maximum Door Size Wood or Metal Inches (cm)		Model Number		Dimensional Information Shown In Inches (mm) R Minimum Top Rail 5/8″ (16mm) frame stop	
Interior	Exterior	Non-Hold Open	Hold Open	Without Drop Plate	With 88 Drop Plate
48″ (122)	36″ (91)	78B/D-PA	78B/F-PHA	5-3/8″ (137)	2-1/2″ (64)
	44″ (112)	78E/F-PA	78E/F-PHA		

Door sizing informaton is based on installation on standard weight doors, 7′0″ (213cm) high, 1-3/4″ (44mm) thick; hung on anti-friction hinges and operating under normal conditions.

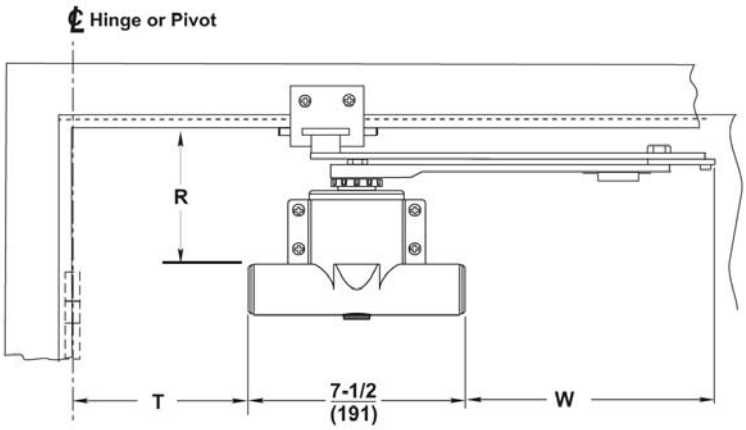

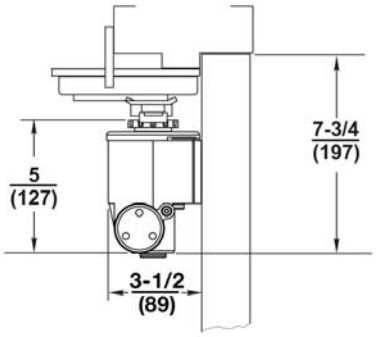

Door Width Inches (cm)	Dimensional Information								
	R - Minimum Top Rail 5/8″ (16mm) frame stop		T- Template Position For Hold Open at Listed Angle or Dead Stop at Listed angle plus 5˚						W-Arm Extension Beyond Closer
	Without Drop Plate	With 88 Drop Plate	85°	90°	95°	100°	105°	110°	
28-32″ (71-81)	5-5/8″ (143)	2-3/4″ (70)	10″ (254)	9-3/8″ (238)	8-3/4″ (222)	8-1/4″ (210)	7-3/4″ (197)	7-1/2″ (191)	8-7/8″ (225)
33-41″ (84-104)			12-1/4″ (311)	11-5/8″ (295)	11″ (279)	10-1/2″ (267)	10″ (254)	9-5/8″ (244)	10-3/8″ (264)
42-48″ (107-122)			14-5/8″ (371)	13-7/8″ (352)	13″ (330)	12-1/2″ (318)	12″ (305)	11-1/2″ (292)	11-7/8″ (302)

Maximum Door Size Inches (cm)		Model Number		
Interior	Exterior	Non-Hold Open	Hold Open	x Specify Door Width
28-41″ (71-104)	28-36″ (71-91)	UNI78-B/D	UNI78-B/D-H	
42-48″ (107-122)	37-48″ (94-122)	UNI78-E/F	UNI78-E/F-H	

Door sizing informaton is based on installation on standard weight doors, 7′0″ (213cm) high, 1-3/4″ (44mm) thick; hung on anti-friction hinges and operating under normal conditions.

REGULAR ARM

Brackets for Non-Hold Open Arms

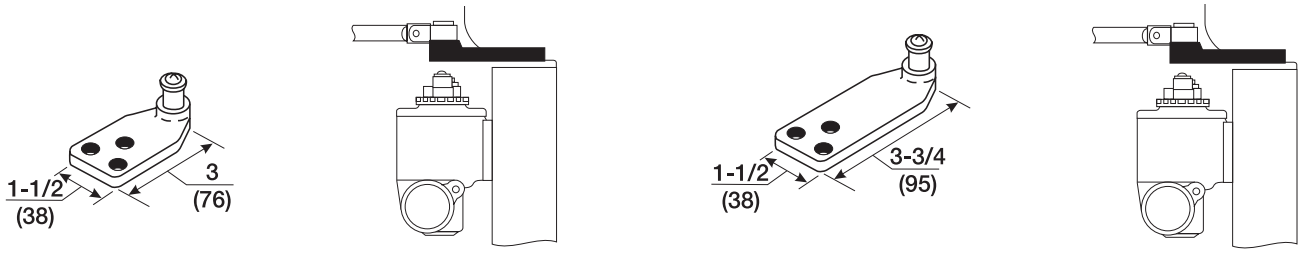

Molded/Bull Nose Trim - #2403 Bracket:
For use where the door frame has molded or bull nose trim which will not accept a standard non-hold open shoe. The bracket is mortised into the frame rabbet and projects beyond the face of the frame. It will accommodate a frame rabbet up to 2" (51 mm) deep.

Molded/Bull Nose Trim - #2403 3/4 Bracket:
This bracket is similar to - but longer than - the 2403 bracket. It is designed to accommodate frame rabbets from 2" to 2-7/8" (51 mm to 73 mm) deep.

Brackets for Hold Open Arms

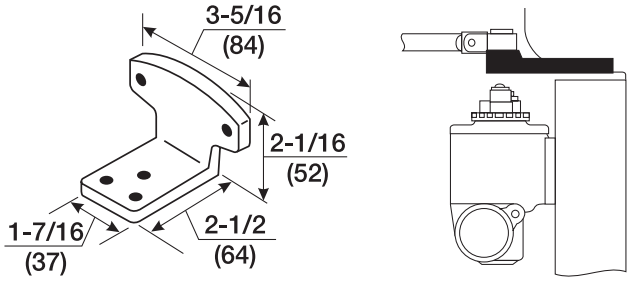

Molded/Bull Nose Trim - #80 Bracket:
For use where the door frame has molded or bull nose trim which will not accept a standard hold open shoe. It is mortised into the frame rabbet, and projects beyond the face of the frame. It will accommdate a rabbet up to 2" (51 mm) deep. This bracket is used in combination with the standard hold-open mounting shoe.

Norton®

Brackets for Hold Open Arms

PARALLEL ARM

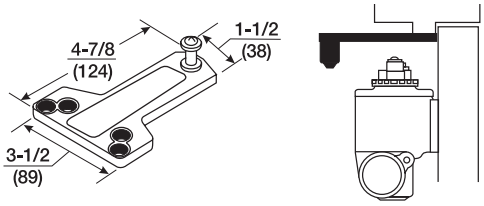

Standard Installation - #1618 Soffit Plate: This soffit plate is supplied standard with parallel arm closers. It can be mounted where the frame soffit is as narrow as 1" (25 mm).

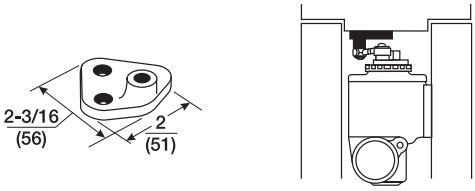

Mounting Between Doors - #2018 Soffit Bracket: For use where insufficient space between companion doors does not permit use of other soffit plates. This bracket permits mounting of the closer between doors with as little as 4-1/8" (105 mm) of header space. Permits closer arm to clear up to a 5/8" (16 mm) high stop.

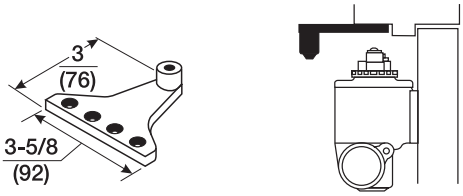

Narrow Frame/Removable Stop - #2018B Soffit Plate: For use where a narrow frame or frame with removable stop does not permit use of the standard soffit plate. This plate may be mounted on the frame soffit or the frame rabbet where the stop does not exceed 5/8" (l6mm) in height. All of the screw holes are in a straight line, requiring as little as 1-1/4" (32 mm) of frame reveal to mount bracket and maintain good closer arm geometry. Where the frame soffit is as wide as 2" (51 mm), this soffit plate may be used to clear weatherstripping that is up to 1-3/8" (35mm) wide and 5/8" (l6mm) in height.

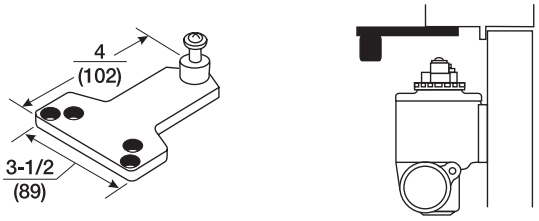

Blade/Applied Stop - #2018D Soffit Plate: For use where a blade or applied stop does not permit installation of the standard soffit plate. Mounts to either the frame soffit or rabbet. Since this soffit plate projects 7/8" (22 mm) less than a standard soffit plate, it requires a minimum frame reveal of 1-1/2" (38 mm). Permits closer arm to clear up to a 5/8" (16 mm) high stop.

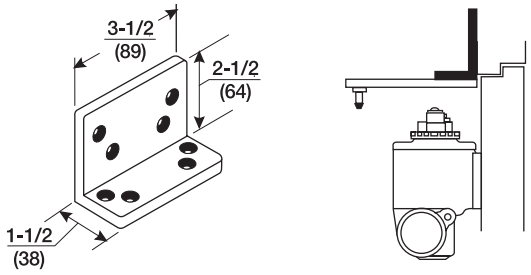

Flush Transom - 2022 Angle Bracket: For use where rabbeted or flush transom conditions prevent installation of a soffit plate. Used in combination with the 1618 soffit plate, or it may be used in combination with the 2018S soffit plate when it is necessary for the closer arm to clear a separate overhead door holder.

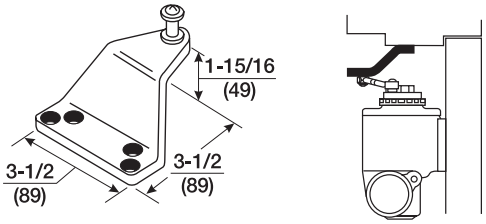

Extra-Clearance - #2018S Offset Soffit Plate: For use where the need for additional clearance prevents use of the standard soffit plate. This plate mounts to the frame soffit to provide up to 1-1/2" (38mm) of clearance when a separate overhead door holder is used. Standard mounting requires a 2-5/8" (67mm) wide frame soffit. It may also be used where unusually high frame stops or weatherstripping prevent the use of other soffit plates.

PARALLEL ARM

Brackets for Non-Hold Open Arms

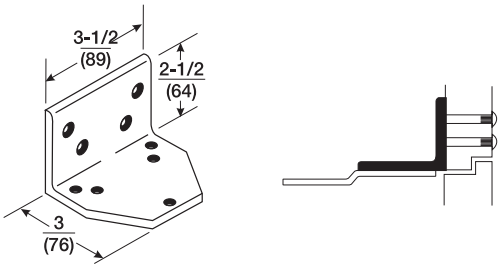

Flush Rabetted Transom-#2019L Angle Bracket: For use where flush transom conditions prevent mounting of the standard soffit plate. This bracket is used in combination with the standard soffit plate.

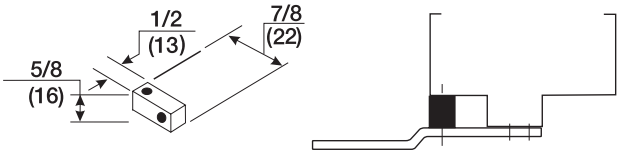

Standard - #2019S Spacer Block: For use where a narrow frame soffit does not provide adequate support for the soffit plate. Supplied as standard with all parallel rigid arm closers.

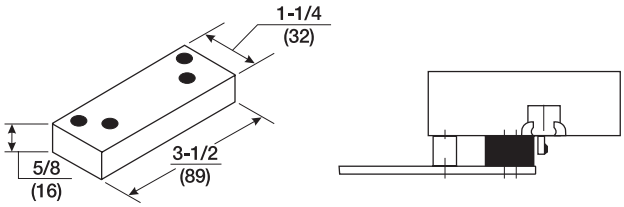

Clearance/Support Blade Stop - #6891 Spacer Block: For use where the frame has a blade stop and the soffit plate must be mounted on the frame rabbet. This accessory is used in combination with the standard Spacer Block to provide clearance of the blade stop.

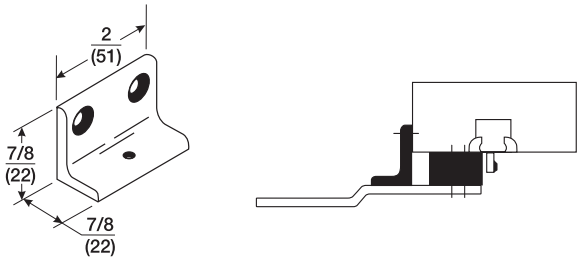

Narrow Frame - #6890 Support Bracket: For use where the frame is narrow, and the soffit plate cannot be mounted directly to the frame soffit or rabbet. Used in combination with the #6891 Spacer Block on blade stop frames to provide extra support and needed clearance of the blade stop.

Closer Mounting Plates

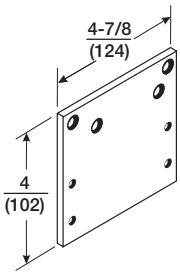

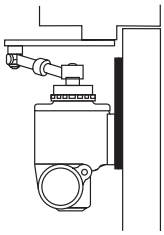

Narrow Top Rail - #88 Drop Plate: For use where a narrow top rail prevents the closer from being mounted directly to the door surface.

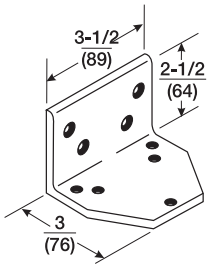

Flush Transom - #2019L Angle Bracket: For use where flush transom conditions prevent installation of the standard hold open soffit plate. Used for parallel hold-open arms.

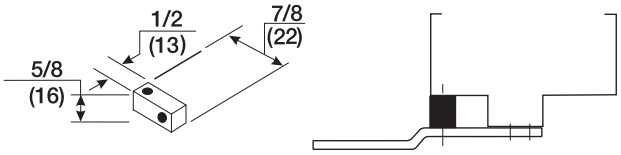

Standard - #2019S Spacer Block: For use where a narrow frame soffit does not provide adequate support for the soffit plate. Supplied as standard with all parallel rigid arm closers.

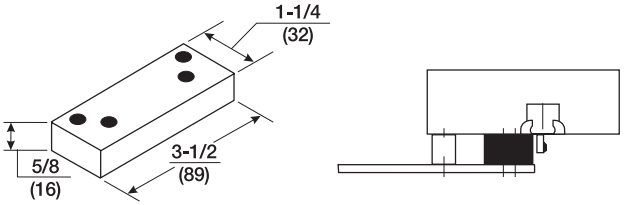

Clearance/Support Blade Stop - #6891 Spacer Block: For use where the frame has a blade stop and the soffit plate must be mounted on the frame rabbet. This accessory is used in combination with the standard Spacer Block to provide clearance of the blade stop.

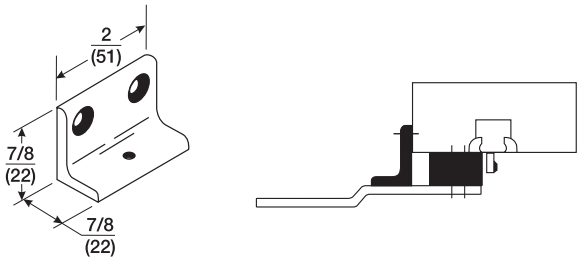

Narrow Frame - #6890 Support Bracket: For use where the frame is narrow, and the soffit plate cannot be mounted directly to the frame soffit or rabbet. Used in combination with the #6891 Spacer Block on blade stop frames to provide extra support and needed clearance of the blade stop.

UNITROL ARM

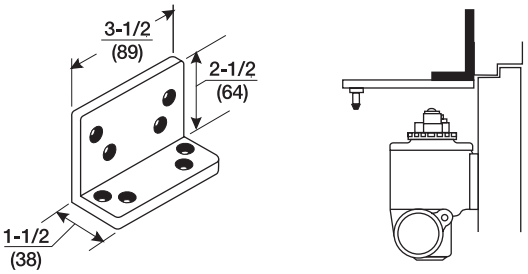

Flush Transom - 2022 Angle Bracket: For use where rabbeted or flush transom conditions prevent installation of a soffit plate. Used in combination with the 1618 soffit plate, or it may be used in combination with the 2018S soffit plate when it is necessary for the closer arm to clear a separate overhead door holder.

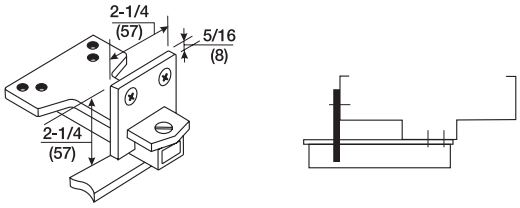

Additional Support - #6190 Reinforcing Bracket: Standard for use with all parallel arm Unitrol door controls. Provides additional support to the soffit plate on installations with door frame reveals from 1-7/8" to 4-5/8" (48mm to 117mm).

Reinforcing Kit

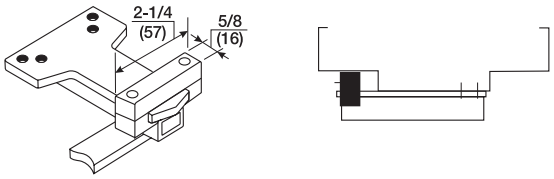

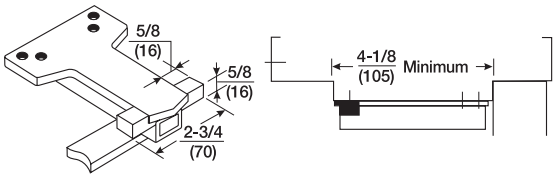

Wide Frame - #6191 Reinforcing Kit: Optional for use with all parallel arm Unitrol door controls. Used to support the soffit plate on installations with wide frames. Clamps may be used with or without the spacer block, depending on frame conditions.

Closer Mounting Plates

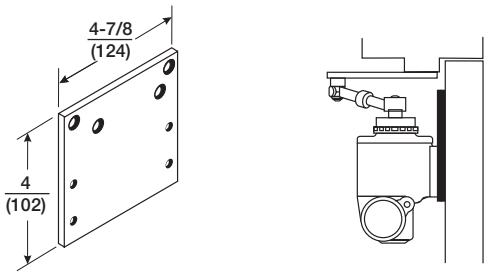

Narrow Top Rail - #88 Drop Plate: For use where a narrow top rail prevents the closer from being mounted directly to the door surface.

CORNER BRACKETS

All of the following frame mounted brackets require the use of a door closer of the opposite hand from the hand of the door. Use the Parallel Arm Sizing Chart to select the correct size of closer to use, when the closer is to be mounted on a corner bracket.

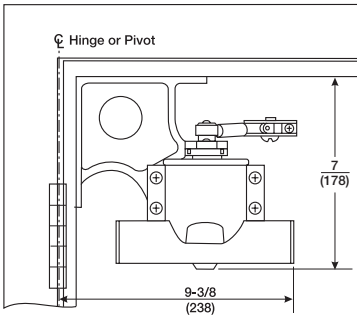

Corner Mounting, Standard Drop - #2-B/F Corner Bracket: For use where door is required to open to 180°. Minimum soffit width 1-3/8" (35mm).

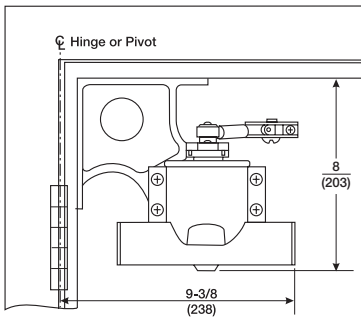

Corner Mounting, Extra Drop - #5-B/F Corner Bracket: For use with a separate overhead door holder. Drops closer 1" (25 mm) lower than #2-B/F Standard Drop Corner Bracket to permit mounting of an overhead holder. Permits door openings to 180°. Minimum soffit width 1-3/8" (35mm).

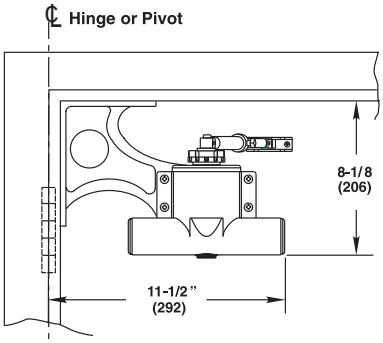

Corner Mounting, Extra Drop and Extension - #8-B/F Combination Bracket: Recommended for use instead of #2-B/F or #5-B/F Corner Brackets, whenever possible. Provides 1/2" (13 mm) more clearance than #5-B/F Corner Bracket for an overhead door holder, and positions closer farther from hinge edge of door for best power advantage. Permits door openings to 140°.

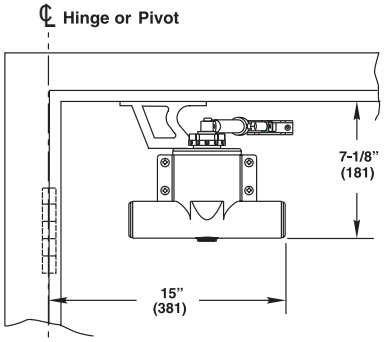

Soffit Mounting - #1-B/F Soffit Bracket: For use where frame conditions prevent mounting of a corner bracket. This bracket mounts to the overhead frame soffit. Permits door openings to 180°.

CORNER BRACKETS

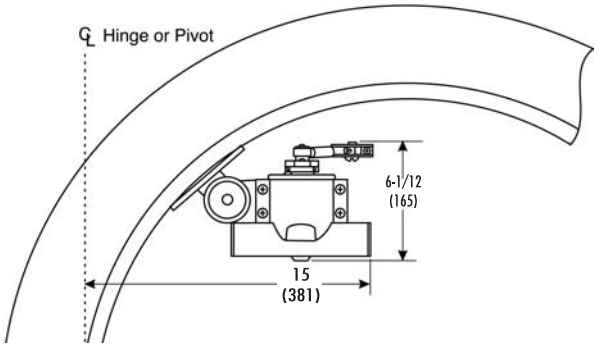

Arched or Circular Top Door - #6-B/F Adjustable Bracket: For opposite hinge side application on arched or circular top doors. This frame-mounted bracket can be adjusted to accommodate virtually any radius of frame. Minimum soffit width 2-1/2" (64mm). This bracket requires the use of a door closer of the opposite hand from that of the door.

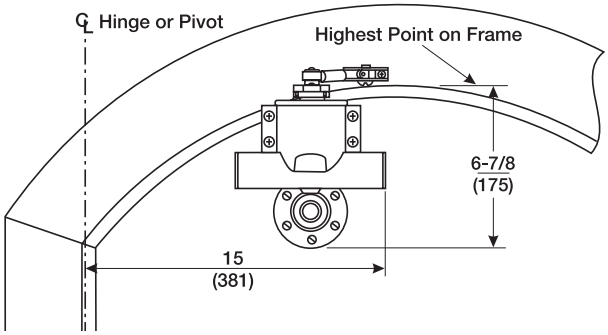

Arched or Circular Top Door - #7-B/F Offset Adjustable Bracket: For hinge side application on arched or circular top doors. This door-mounted bracket is adjustable to accommodate virtually any radius of frame. Base diameter 3-5/8" (92mm).

ADAPTER PLATES

Size Closer Being Replaced	Adapter Plate Catalog Number	Dimensions	
		A	B
B	9-B	4-7/8″ (124)	2-1/4″ (57)
B/C	9-B/C	5-1/2″ (140)	2-5/8″ (67)
D	None Required	—	—
E/F	9-E/F	5-1/2″ (140)	2-5/8″ (67)

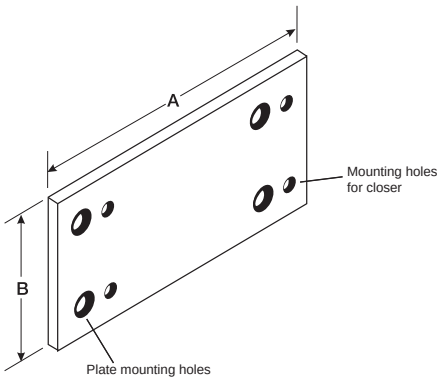

#9 Adapter Plate
For use when replacing a discontinued old style traditional surface closer with a series 78B/F Traditional Surface Closer. The plate selected will employ the existing holes in either door, corner bracket or soffit bracket. The Series 78B/F closer will mount to the plate. These plates can be used to convert regular arm, parallel arm or bracket mount installations. Order by model number.

REGULAR ARM

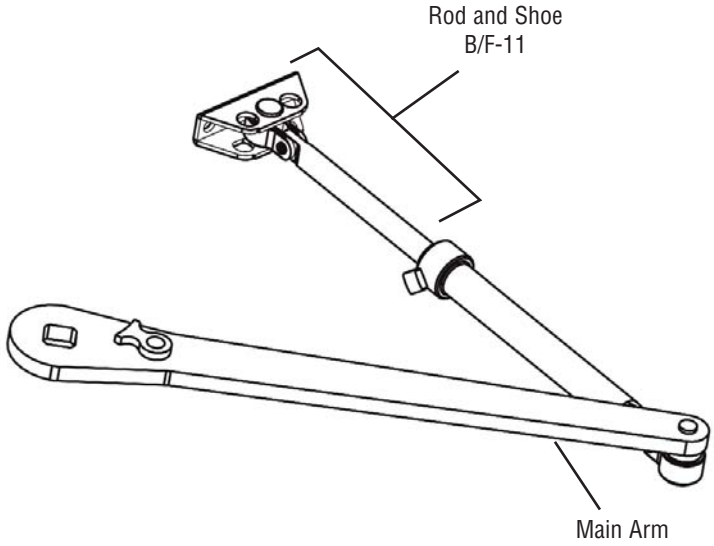

Non-Hold Open

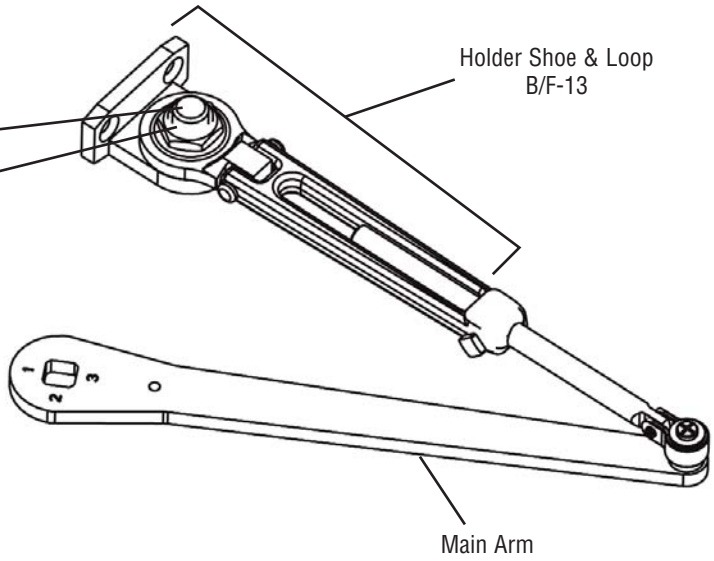

Hold Open

Note: Mounting hardware included with all parts ordered

Arm Function	Complete Arm Assembly	Main Arm	Main Arm Less Rod & Shoe	Main Arm Less Holder Shoe & Loop Assy
Non-Hold Open	B/F-1	B/F-1M	B/F-1W	N/A
Hold Open	B/F-3		N/A	B/F-3W

PARALLEL ARM

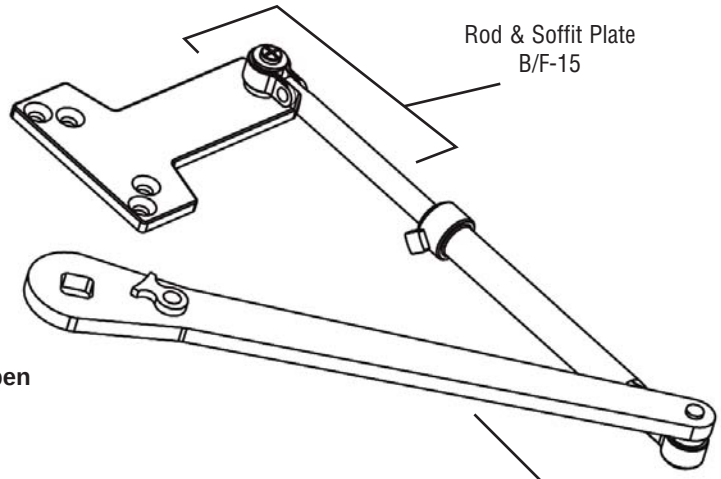

Non-Hold Open

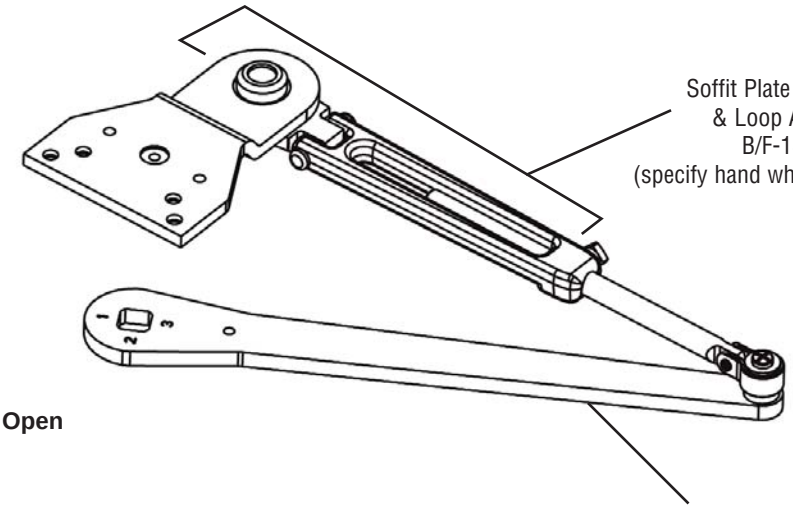

Hold Open

Note: Mounting hardware included with all parts ordered

Arm Function	Complete Arm Assembly	Main Arm	Main Arm Less Rod & Soffit Plate	Main Arm Less Soffit Plate Holder Assy & Loop Assy
Non-Hold Open	B/F-5	B/F-1M	B/F-5W	N/A
Hold Open	B/F-8		N/A	B/F-8W

Norton®

PARALLEL RIGID ARM ASSEMBLIES

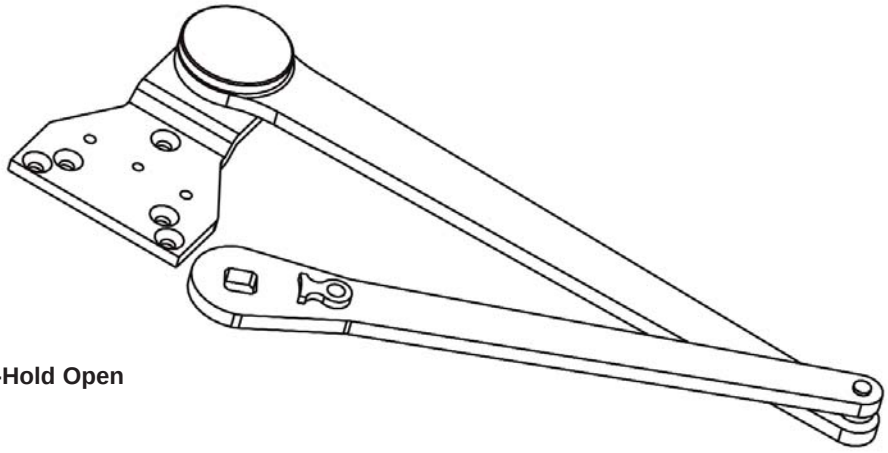

Non-Hold Open

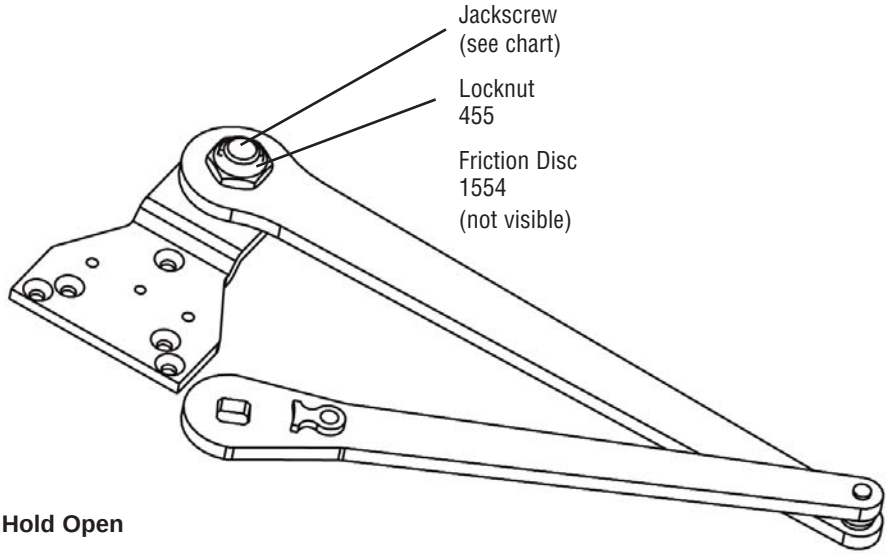

Hold Open

Note: Mounting hardware included with all parts ordered

Arm Function	Complete Arm Assembly	Jacksrew
Non-Hold Open	78PRA-5	N/A
Hold Open	78PRA-8R (Right Hand)	1543R
	78PRA-8L (Left Hand)	1543L

UNITROL® ARM ASSEMBLIES

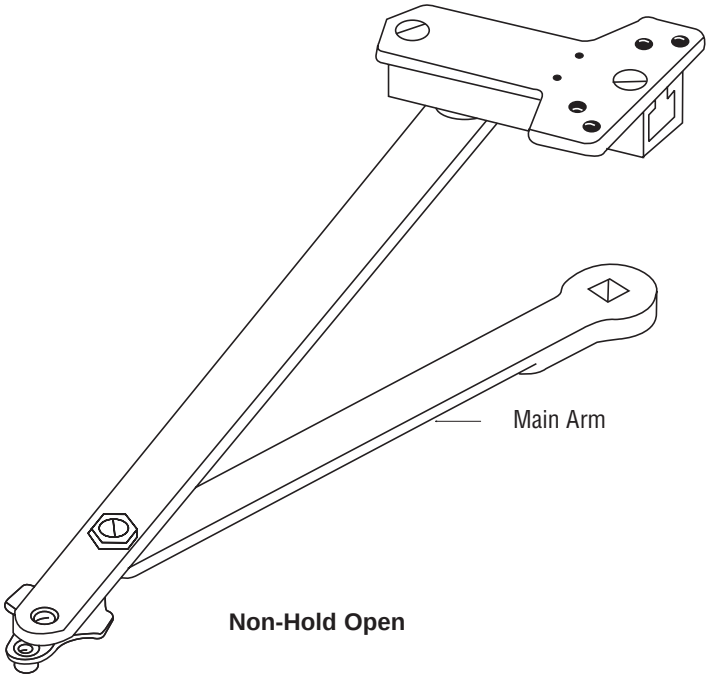

Non-Hold Open

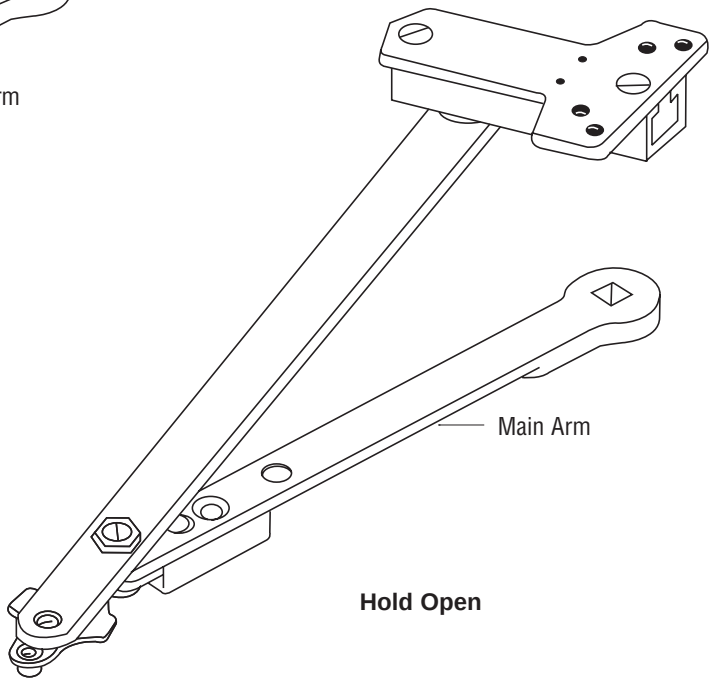

Hold Open

Note: Mounting hardware included with all parts ordered

Door Width (cm)	Main Arm Length* (mm)	Complete Arm Assembly	
		Non-Hold Open	Hold Open
28″- 32″ (71 - 81)	9-1/2″ (241)	6130-17	6130-7
33″- 41″ (84 - 104)	11″ (279)	6130-18	6130-8
42″- 48″ (107 - 122)	12-1/2″ (318)	6130-19	6130-9

Norton®

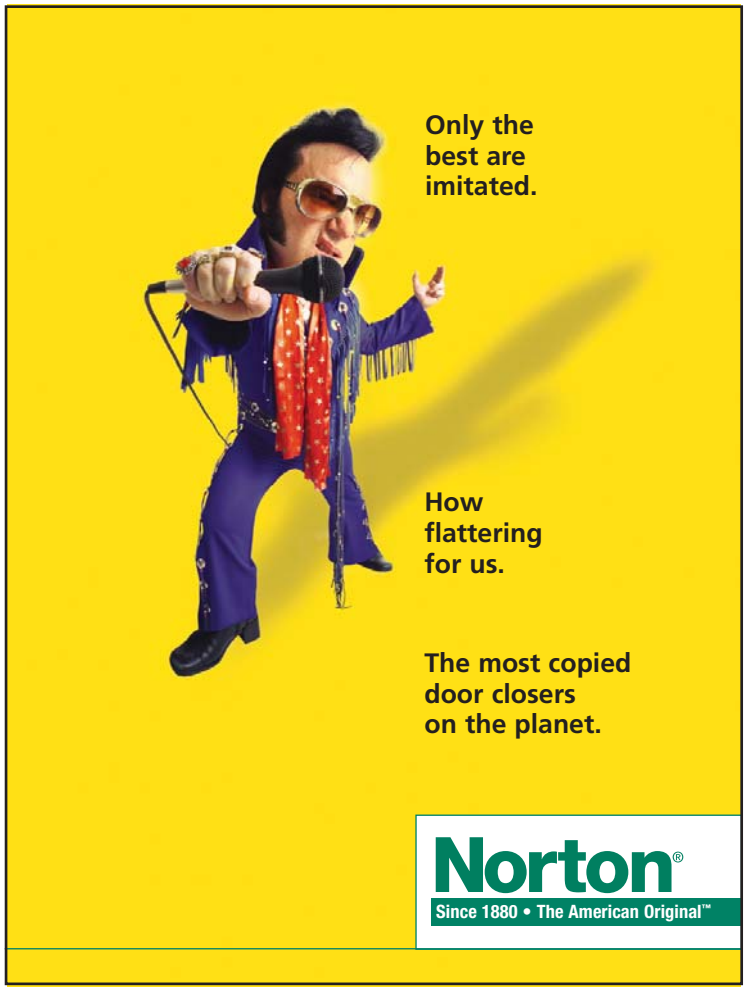

Norton Door Controls
1902 Airport Road
Monroe, NC 28110
Telephone: 1.800.438.1951
Fax: 1.800.338.0965

Yale-Corbin Canada Ltd
6940 Edwards Boulevard
Mississauga, Ontario, Canada L5T 2W2
Telephone: 1.800.461.3007
Fax: 1.800.461.8989

For a complete listing of products and applications please visit our web site.
www.nortondoorcontrols.com
www.yalecorbin.on.ca

Norton® closers...still proudly manufactured in the United States with more than 75% U.S. content.

Norton® is a registered trademark of Yale Security Inc. All contents current at time of publication. Yale Security Inc. reserves the right to change availability of any item in this catalog, its design, construction, and/or its materials. Other products brand names not referenced in this catalog may be trademarks or registered trademarks of their respective owners and are mentioned for reference purposes only. Copyright© 2001, 2004, Yale Security Inc. All rights reserved. These materials are protected under U.S. copyright laws.

The ASSA ABLOY Group is the world's leading manufacturer and supplier of locks and associated products, dedicated to satisfying end-user needs for security, safety and convenience.

An ASSA ABLOY Group company

ASSA ABLOY

43081-CP-15.0-8/04R