SINCE 1880

Norton®

THE AMERICAN ORIGINAL

7700 8000

Power Track® Electromechanical Closer-Holder

An ASSA ABLOY Group company

ASSA ABLOY

INTRODUCTION

Norton's Power Track® Closer-Holders combine the functions of a single point electromechanical door holder with the proven reliability of a 7700 Series or 8000 Series Door Closer. The track assembly contains an arm slide and solenoid operated hold open mechanism and is available with or without an integral smoke detector. The closer is mounted on the door. The ***Power Track*** is mounted to the frame face for pull side installations or the frame soffit for push side installations.

The ***Power Track*** is an aluminum extrusion which incorporates a solenoid actuated cam that locks the arm slide in the track at a selected point. The degree of door hold open is selected by adjustment of the telescoping arm. When there is power to the unit, the door will hold open at the selected hold open point. Any power interruption will release the arm slide and the door will close. The door can be released manually at any time.

FUNCTIONS

Master Unit

- Unit comprised of integral smoke detector and solenoid hold open mechanism in the slide track, a hook-up box and door closer.
- Can be used to control a single door or a pair of doors in conjunction with either a Slave Unit or a Support Unit.
- **Suffix "PTD" to model number**

Slave Unit

- Unit is for installation on one leaf of a pair of doors when the other leaf is controlled by a "PTD" Master Unit.
- The unit is composed of a solenoid hold open mechanism in the slide track, hook-up box and a door closer.
- Unit will only operate on 24VCD power from the Master unit.
- **Suffix "PTS" to model number.**

Support Unit

- Unit is comprised of a solenoid hold open mechanism in the slide track, hook-up box and a door closer.
- Units can be installed on a single door or a pair of doors when controlled by compatible UL listed detection equipment such as area ceiling detectors, pull stations, and remote alarm panels.
- Can also be used in conjunction with a Master Unit on a pair of doors. Support unit must be 24VDC.
- **Suffix "PT" to model number.**

TABLE OF CONTENTS

Introduction & Functions 2
How To Order, Finishes, Compliance Standards 3
Overview & Features 4
Ordering Power Track® Voltages 5
7705PT Technical Details 6
P7705PT Technical Details 7
8305PT/8505PT Technical Details 8
P8305PT/P8505PT Technical Details 9
Electrical Information, Suggested Specifications 10
Track Assemblies 11
Parts 12
Notes 13

SINCE 1880 Norton® THE AMERICAN ORIGINAL

HOW TO ORDER

P PREFIX	7705 DOOR CLOSER	PTD SUFFIXES	X	VOLTAGE	X	FINISH Refer to chart below

None – Unit mounted on pull (hinge) side of door. Maximum reveal 1/8" (3mm) For greater reveals suffix "DE" to model number
P – Unit mounted on push (stop) side of door

PTD - Master Unit with Integral Smoke Detector
PTS - Slave Unit (24 volts only). Only used with a Master Unit
PT - Support Unit (used with area/ceiling detectors)
DE - Deep Reveal Arm for Double Egress Frames (specify hand). Reveals 1/8" – 3" (3-76mm). Hinge (pull) side units only.

7705 – 7700 Series Door Closer
8305 – 8000 Series (with Slim Line Cover)
8505 – 8000 Series (with Full Cover)

FINISHES

Sprayed Finishes			
Description	**Specify Designation**	**Complements the following finishes**	**Old Designation**
Aluminum	689	628, 625, 629, 630, 651, 652	AL
Statuary Bronze	690	640, 613, 695	STAT
Dull Bronze	691	612, 637, 639	DB
Black	693	315	315
Medium Amber	694	312	312
Gold	696	605, 606, 632, 633	GB
Prime Coat (Beige)*	600		SRI
Corrosion Inhibitor Prime Coat	SRI		SRI
*** Available at extra cost. Closers can be ordered prime coated with finish, i.e. SRI x 690.**			

Product will be painted with a combination of waterborne acrylic and polyester powder coat.

COMPLIANCE STANDARDS

Power Track® complies with ANSI/BHMA A156.15 Specifications. Power Track® is listed by Underwriters Laboratories for labeled fire doors. The product is manufactured in an ISO 9001 facility.

OVERVIEW

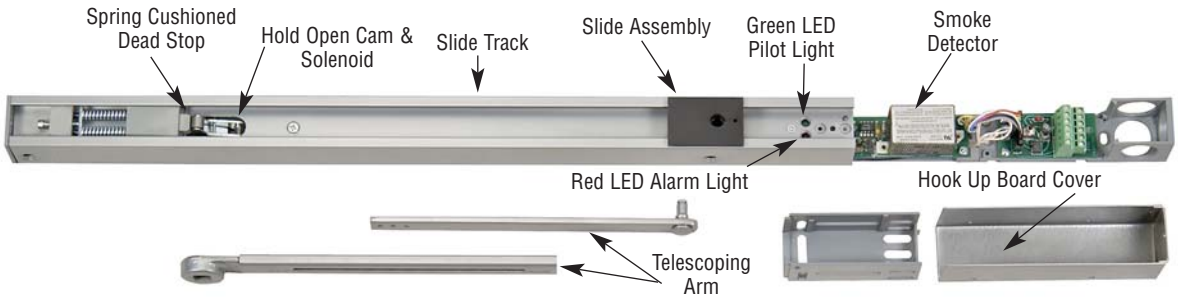

STANDARD FEATURES

Selective Single-Point Hold Open:
The Power Track® has one template position. The single-point hold open position is selected by adjusting the telescoping arm with a hex drive set screw. Hold open range is 85° thru 110° in approximately 3° increments.

Non-Handed:
Units are non-handed.

Pull/Push Installation:
Units can be installed on either side of the door. No prefix indicates pull side application. Prefix "P" for push side installation.

Choice of Supply Voltage:
Available in 24VAC/DC or 120VAC, 60Hz. voltages. Power to these devices must be within a range of (+) 10% (-) 15% of the stated voltage.

Fail Safe:
In the event of a power outage, the ***Power Track*** solenoid will be de-energized and the closer/holder will then operate as a normal door closer.

Wiring Option:
Both pull and push side applications will accommodate either concealed or surface wiring. The hook-up box will accept 3/4" (19mm) conduit. Each ***Power Track*** is supplied with a thin-walled conduit nut to attach the conduit clamp. The hook-up box cover must be prepared for surface wiring using a knockout punch or electrical trade hole cutter. State and local building codes will dictate the type of wiring.

Spring Cushioned Dead Stop:
A spring loaded buffer block at the point of hold open prevents over travel of the arm slide and provides a cushioned dead stop. Use of an additional wall or floor stop is always recommended.

FEATURES - SMOKE DETECTOR

Dual Chamber Ionization Sensing
Detector employs dual ionization chambers to substantially reduce the probability of false alarms.

Fire/Smoke Control Circuit
Interprets the alarm signal from the detector and provides switching contacts to interrupt power to the hold open solenoid and divert it to activate optional audio/visual alarms.

Alarm (Relay) Contacts
Normally open in standby condition (energized, non-alarm state). These contacts close during an alarm condition (smoke detected) and switch power from the solenoid to an optional local alarm.

Trouble (Relay) Contacts
Normally closed in standby condition, these supervisory contacts monitor the continuity of power within the detector circuit. Any power interruption within the detector circuit will open these contacts. They can then be used to simultaneously indicate a trouble condition to the alarm panel on a separate trouble circuit.

Quick Disconnect Modules
Each component, solenoid coil, detector and control feature quick disconnect wiring for easy servicing and replacement.

Locked-In Alarm
When a unit alarms, it must be manually reset. This can be accomplished by remote control from the alarm console or by the reset button in the smoke detector. Reset button is accessible through a hole in the underside of the track.

Alarm Light
A red LED is illuminated when the detector goes into the alarm condition (smoke detected). This light is easily visible from the underside of the track which makes an alarmed unit easy to identify.

Pilot Light:
A green LED easily visible from the underside of the track is illuminated at all times except when a Trouble Condition is sensed. Indicates at a glance whether or not the unit is energized.

SINCE 1880 Norton® THE AMERICAN ORIGINAL

ORDERING VOLTAGE'S

Type of Unit	Model	# of Power Input Lines	Choices of Voltage Input	Can be used with
Master	PTD-24	1	24 VAC/DC	Slave Model PTS
	PTD-120		120 VAC, 60 Hz	Slave Model PTS
Slave	PTS	1	Power Supplied from Master Unit (24VDC)	Master Model PTD-24 or PTD-120
Support	PT-24	1	24 VAC/DC	Area Smoke Detection System
	PT-120		120 VAC, 60Hz	Area Smoke Detection System or Master Model PTD24-120

Operating voltage or voltages for the control of fire/smoke doors are specified by the architect, electrical engineer and alarm system engineer and/or contractor. Consulting with these sources will verify which operating voltage(s) should be ordered.

"PTD" Master Units

- Two components require electrical power:
  - Integral smoke detector requires 24VDC input power
  - Hold open solenoid requires 24VDC input
- Hook-up box receives primary voltage input and distributes it to the smoke detector and hold open solenoid(s).
- Available with two voltage options:
  - **PTD-24** suffix –
    - Accepts 24VAC or 24VDC power input.
    - A rectifier in the hook-up box will rectify alternating current to direct current for operation of both the smoke detector and hold open solenoid(s).
  - **PTD-120** suffix –
    - Accepts 120VAC power input.
    - A 120VAC to 24VAC transformer in the hook-up box steps the input voltage down to 24VAC. It is then rectified to 24VDC for operation of both the smoke detector and the 24VDC hold open solenoid(s).

"PTS" Slave Units

- Hold open solenoid requires electrical power from master unit
- Only available 24VDC
- Only installed when controlled directly by the integral smoke detector of the Master Unit.

"PT" Support Units

- Hold open solenoid requires electrical power
- Solenoid controlled by smoke detection equipment (ceiling detectors) or remote alarm panels
- Available for operation on 24VAC/DC or 120VAC, 60Hz.
- Hold open solenoid operates on direct current
- Contains built-in rectifier that converts alternating current to direct current.

7705 POWER TRACK®

PULL (HINGE) SIDE MOUNTING

7705PTD Shown

Model #	Description
7705PTD	Master Unit Controlled by Integral Smoke Detector
7705PTS	Slave Unit Controlled by Master Unit Smoke Detector
7705PT	Support Unit Controlled by Remote Detection Equipment

TECHNICAL DETAILS

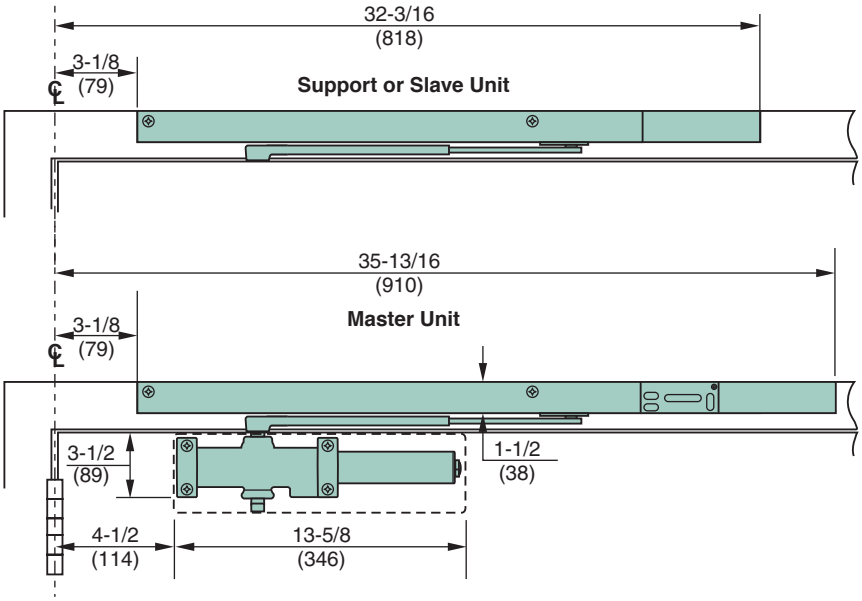

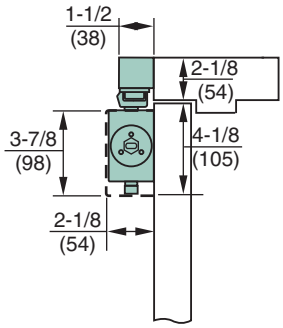

Minimum Top Rail	
Without Drop Plate	**With 7786 Drop Plate**
3-1/2" (89mm)	1-7/8" (48mm)

2-1/8" (54mm) minimum ceiling clearance required for *Power Track*.

DOOR SIZE

	Door(s) Opening Inches (cm)		Model Number & Type
	Max.*	**Min.****	
Single Door	48" (122)	36" (91)	(1) 7705PTD Master Unit
	48" (122)	32" (81)	(1) 7705PT Support Unit
Pairs of Doors	96" (244)	68" (173)	(1) 7705PTD Master Unit and (1) 7705PTS Slave Unit or (1) 7705PT Support Unit
	96" (244)	64" (163)	(2) 7705PT Support Units (controlled by remote detection equipment)

* Maximum door size for door closer power.

** Minimum door opening for standard installation. Consult factory for door openings narrower than those shown.

Double Egress Doors: with reveals greater than 1/8" (3mm); a special handed arm for the pull (hinge) side Power Track is available. Accommodates reveals to 3" (76mm). Suffix "DE" to model number; specify hand.

P7705 POWER TRACK®

Model #	Description
P7705PTD	Master Unit Controlled by Integral Smoke Detector
P7705PTS	Slave Unit Controlled by Master Unit
P7705PT	Support Unit Controlled by Remote Detection Equipment

Push (Stop) Side Mounting

P7705PT Shown

NOTE: Interference with other hardware such as vertical rod exit devices, magnetic locks, and door coordinators, etc. must be considered when selecting this product.

TECHNICAL DETAILS

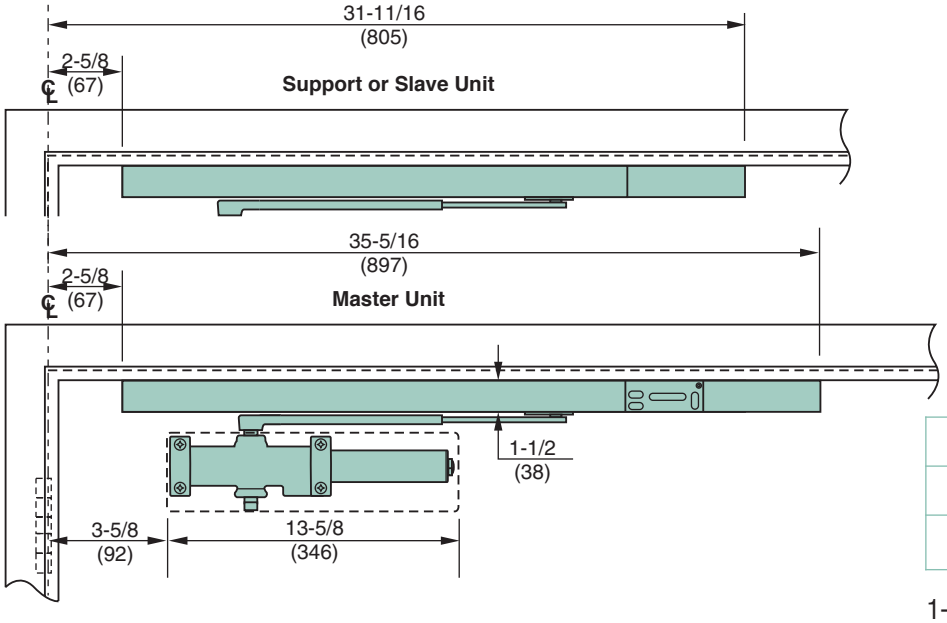

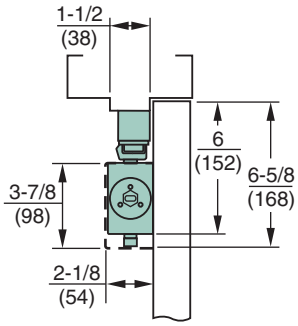

Minimum Top Rail	
Without Drop Plate	**With 7788 Drop Plate**
6" (152mm)	2-3/4" (70mm)

1-1/2" (38mm) minimum frame soffit required for Power Track.

DOOR SIZE

	Door(s) Opening Inches (cm)		Model Number & Type
	Max.*	Min.**	
Single Door	48" (122)	36" (91)	(1) P7705PTD Master Unit
	48" (122)	33" (84)	(1) P7705PT Support Unit
Pairs of Doors	96" (244)	68" (173)	(1) P7705PTD Master Unit and (1) P7705PTS Slave Unit or (1) P7705PT Support Unit
	96" (244)	64" (163)	(2) P7705PT Support Units

* Maximum door size for door closer power.
** Minimum door opening for standard installation. Consult factory for door openings narrower than those shown.

8505 POWER TRACK®

PULL (HINGE) SIDE MOUNTING

8505PTS Shown

Cover		Description
Slim Line	Full	
8305PTD	8505PTD	Master Unit Controlled by Integral Smoke Detector
8305PTS	8505PTS	Slave Unit Controlled by Master Unit
8305PT	8505PT	Support Unit Controlled by Remote Detection Equipment

TECHNICAL DETAILS

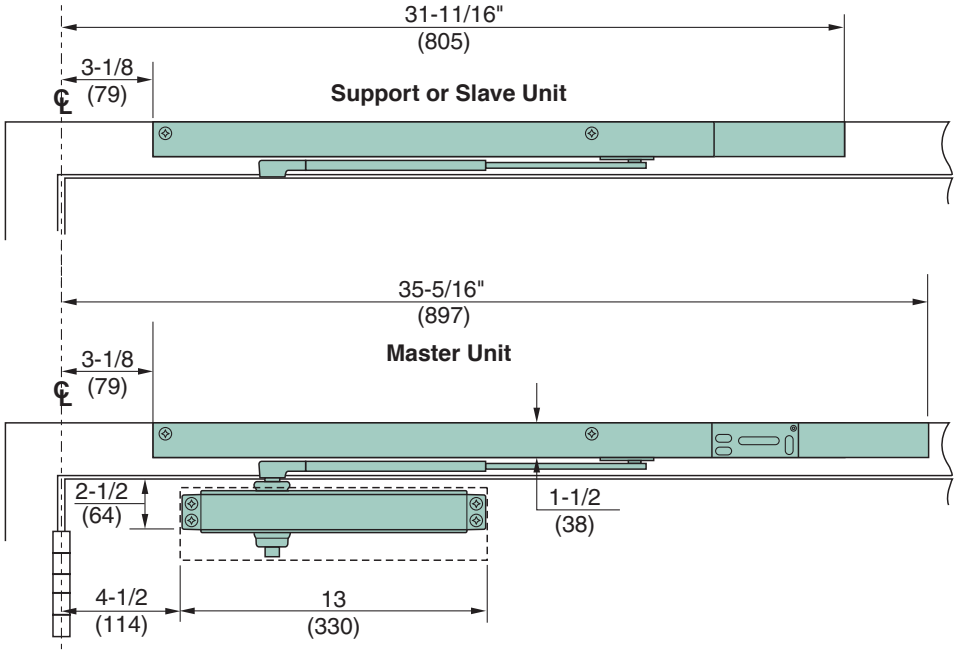

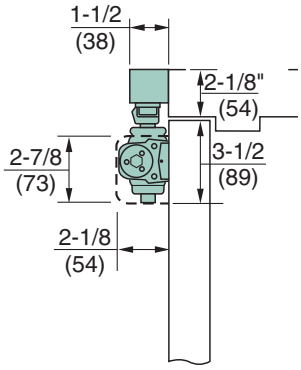

Minimum Top Rail	
Without Drop Plate	With 8146 Drop Plate
2-1/2" (64mm)	1-3/8" (90mm)

2-1/8" (54mm) minimum ceiling clearance required for Power Track.

DOOR SIZE

	Door(s) Opening Inches (cm)		Model Number & Type	
	Max.*	Min.**	Slim Cover	Full Cover
Single Door	48" (122)	36" (91)	(1) 8305PTD Master Unit	(1) 8505PTD Master Unit
	48" (122)	32" (81)	(1) 8305PTS Support Unit	(1) 8505PTS Support Unit
Pairs of Doors	96" (244)	68" (173)	(1) 8305PTD Master Unit and (1) 8305PTS Slave Unit or (1) 8305PT Support Unit	(1) 8505PTD Master Unit and (1) 8505PTS Slave Unit or (1) 8505PT Support Unit
	96" (244)	64" (163)	(2) 8305PT Support Units	(2) 8505PT Support Units

* Maximum door size for door closer power.

** Minimum door opening for standard installation. Consult factory for door openings narrower than those shown.

Double Egress Doors: with reveals greater than 1/8" (3mm); a special handed arm for the pull (hinge) side *Power Track* is available. Accommodated reveals to 3" (76mm). Suffix "DE" to model number; specify hand.

P8505 POWER TRACK®

PUSH (STOP) SIDE MOUNTING

Cover		Description
Slim Line	Full	
P8305PTD	P8505PTD	Master Unit Controlled by Integral Smoke Detector
P8305PTS	P8505PTS	Slave Unit Controlled by Master Unit Smoke Detector
P8305PT	P8505PT	Support Unit Controlled by Remote Detection Equipment

P8505PT Shown

NOTE: Interference with other hardware such as vertical rod exit devices, magnetic locks, and door coordinators, etc. must be considered when selecting this product.

TECHNICAL DETAILS

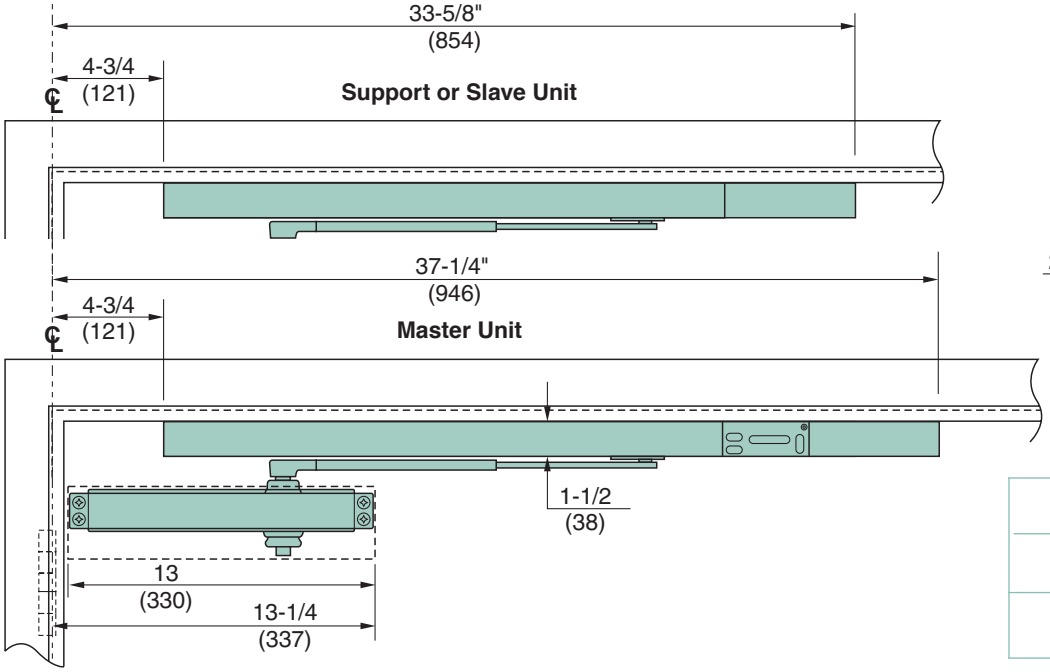

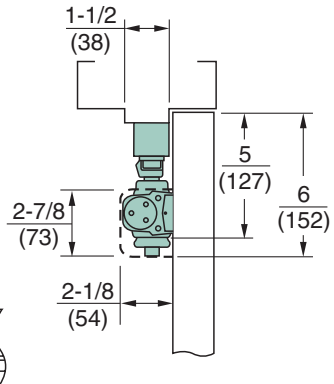

Minimum Top Rail 8148/8158	
Without Drop Plate	Without Drop Plate
5" (127mm)	1-3/8" (90mm)

DOOR SIZE

	Door(s) Opening Inches (cm)		Model Number & Type	
	Max.*	Min.**	Slim Cover	Full Cover
Single Door	48" (122)	38" (97)	(1) P8305PTD Master Unit	(1) P8505PTD Master Unit
	48" (122)	36" (91)	(1) P8305PTS Support Unit	(1) P8505PTS Support Unit
Pairs of Doors	96" (244)	72" (183)	(1) P8305PTD Master Unit and (1) P8305PTS Slave Unit or (1) P8305PT Support Unit	(1) P8505PTD Master Unit and (1) P8505PTS Slave Unit or (1) P8505PT Support Unit
	96" (244)	68" (173)	(2) P8305PT Support Units	(2) P8505PT Support Units

* Maximum door size for door closer power.

** Minimum door opening for standard installation. Consult factory for door openings narrower than those shown.

ELECTRICAL INFORMATION

	Model Number	No. Power Input Lines* (Pairs)	Operating Voltage	Amperage Draw		
				Smoke Detector		Solenoid Coil
				Standby	Alarm	
Master	7705PTD, P7705PTD, 8305PTD, P8305PTD, 8505PTD, P8505PTD	1	24VAC/DC	.016 @ 24VDC	.035 @ 24VDC	.090 @ 24VDC
			120VAC, 60Hz			
Slave	7705PTS, P7705PTS, 8305PTS, P8305PTS, 8505PT, P8505PTS		24VDC from Master	N/A	N/A	.090 @ 24VDC
Support	7705PT, P7705PT, 8305PT, P8305PT, 8505PT, P8505PT		24VAC/DC			
			120VAC, 60Hz			.018 @ 120VAC

*Number of Input Lines (pairs) required to supply Operating Voltage(s).
This does not include signal or control lines (pairs) to Alarm Panels or Slave Units.

SUGGESTED SPECIFICATIONS

Closers for _____ doors shall be electromechanical closer-holder. Hold Open to be achieved by electric solenoid locking of closer arm slide in its track. Track, arm, slide (and) solenoid (and integral smoke detector) to be contained in a single aluminum extrusion 1-1/2" (38mm) high, 1-1/2" (38mm) deep.

Closer shall be door mounted. Track and hold open mechanism shall be surface mounted to the frame face for application on the pull side of the door and frame soffit mounted for application on the push side of the door. Single point hold open shall be selective through a range of 85° to 110°. Hold open point to be achieved by adjustment of a telescoping closer arm.

Closer shall be hydraulic with full rack and pinion enclosed in a cast aluminum alloy shell. Hydraulic fluid shall be non-gumming and non-freezing. Closer shall have two non-critical valves to independently regulate sweep speed and latch speed. It shall have an adjustable backcheck cushioning valve (and an adjustable backcheck positioning valve). All valves shall be adjustable with a hex-key. (Closer shall have spring power adjustment to permit 50% increase in closing power.) Closer to be enclosed in a molded (Full) (Slim Line) cover.

(Master units to have an integral smoke detector with dual ionization chamber. Master units integral smoke detector shall have latching alarm and reset switch.) (Slave units to be controlled by the master unit.) (Support units to be controlled by U.L. Listed Smoke Detection Equipment.) Units to be fail safe and close the door during an interruption to the electrical power. The hold open solenoid coil shall have a maximum amperage draw of (.090 Amps at 24 volts) (.035 Amps at 120 volts). Unit shall have a switch to permit testing of the releasing device function without alarming the system.

All wiring connections shall be made without the need of wire nuts or soldering. Master unit(s) shall require a (24VAC/DC) (120VAC, 60Hz) power input. Slave unit(s) shall require a 24 volt power input from the Master Unit. Support unit(s) shall require a (24VAC/DC) (120, 60Hz) power input. Supplier to coordinate electrical requirements with electrical and alarm system engineers. Wiring (and conduit) by others. Electromechanical Closer-Holder to be Norton Power Track [(P)7700(PT)(PTD)(PTS)] [(P)8300(PT)(PTD)(PTS)] [(P)8500(PT)(PTD)(PTS)]

		Part Number	
Description	**Voltage**	**Hinge Side**	**Stop Side**
Master Unit	24V or 120V	PTD24/120	PPTD24/120
Support Unit	120V	PT120	PPT120
PT24	24V	PT24	PPT24

Master Unit Track Assemblies include track, slider assembly, solenoid block assembly and detector. Hook-up box not included.

Support and Slave Unit Track Assemblies include track, slider assembly and solenoid block assembly. Hook-up box not included.

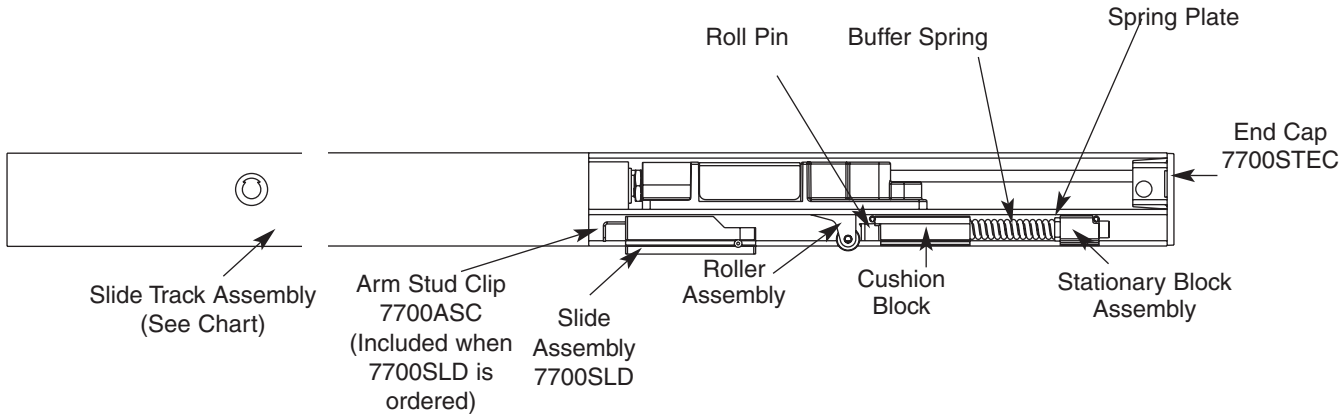

Solenoid Block Assembly	
Voltage	**Model Number**
24V	PT24SOL
120V	PT120SOL

		Part Number	
Description	**Voltage**	**Hook-Up Board**	**Hook-Up Box**
Master Unit	24V	PTDPCB24	PTDHB24
	120V	PTDPCB120	PTDHB120
Support	24V	PTPCB24	PTHB24
	120V	PTPCB120	PTHB120
Slave	24V	PTSPCB24	PTSHB

NOTE: Mounting hardware included with all parts orders.

PARTS

Standard Arm Assembly
7701ST-1A

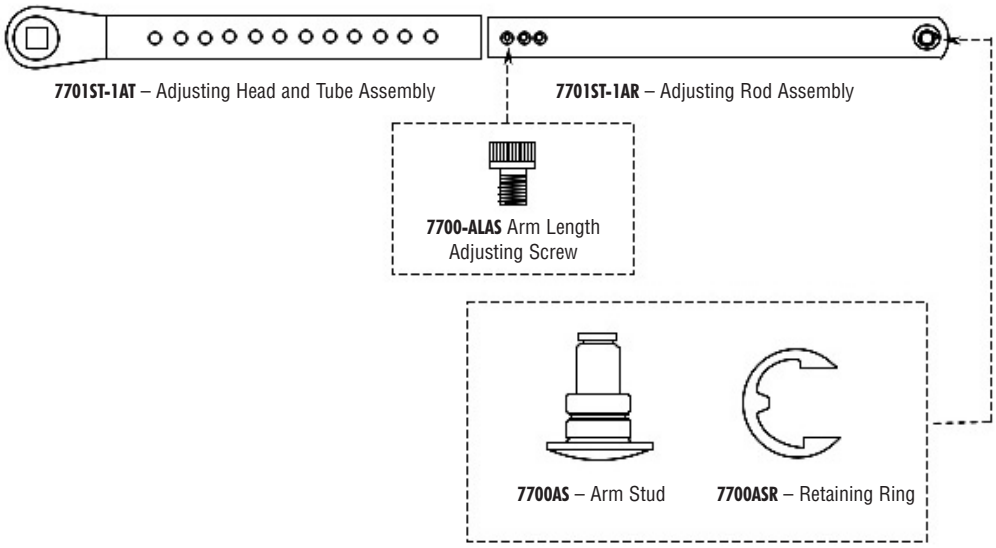

Double Egress Arm Assembly
7701PT-DE-1R – (Right Hand)
7701PT-DE-1L – (Left Hand)

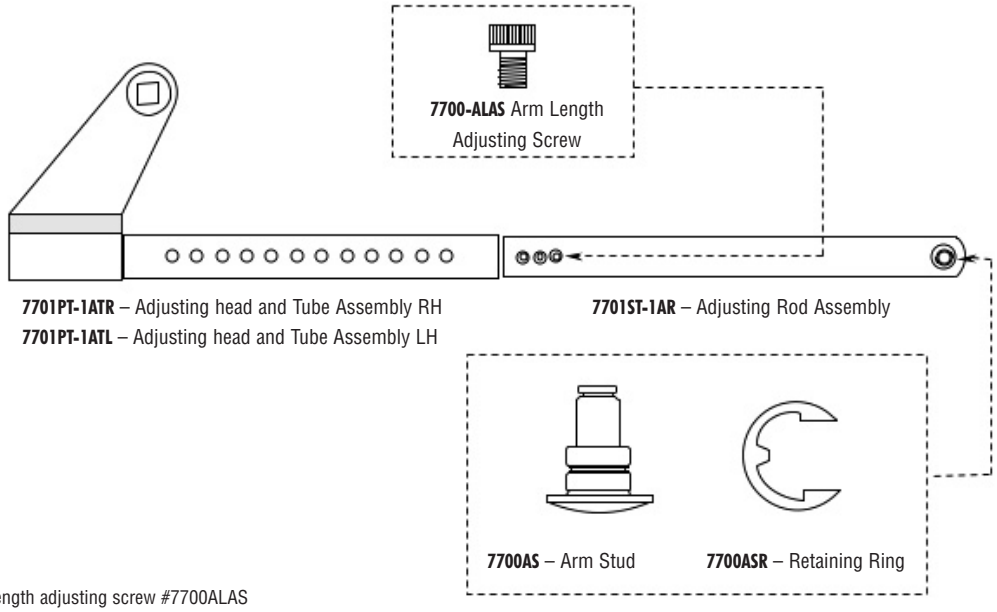

1 Includes arm length adjusting screw #7700ALAS

2 Includes arm tube & adjusting rod assembly

NOTE: Mounting hardware included with all parts orders.

NOTES

NOTES

NOTES

SINCE 1880

Norton®

THE AMERICAN ORIGINAL

For a complete listing of products and applications please visit our web site.

www.nortondoorcontrols.com

www.yalecorbin.on.ca

Or contact us at:

Norton Door Controls
3000 Highway 74 East
Monroe, NC 28112
Telephone: 800.438.1951
Fax: 800.338.0965

Yale-Corbin Canada Ltd
6940 Edwards Boulevard
Mississauga, Ontario, Canada L5T 2W2
Telephone: 800.461.3007
Fax: 800.461.8989

Norton®, PowerMatic® and Yale Security Inc.® are registered trademarks of Yale Security Inc. These materials are protected under U.S. copyright laws. All contents current at time of publication. Yale Security Inc. reserves the right to change availability of any item in this catalog, its design, construction, and/or its materials. Other products' brand names may be trademarks or registered trademarks of their respective owners and are mentioned for reference purposes only.

Copyright 2002, 2005 Yale Security Inc. All rights reserved.

The ASSA ABLOY Group is the world's leading manufacturer and supplier of locking solutions dedicated to satisfying end-user needs for security, safety and convenience.

An ASSA ABLOY Group company

ASSA ABLOY

43033-8/05