Norton®

Since 1880 • The American Original™

Architectural Product Guide

An ASSA ABLOY Group company

ASSA ABLOY

Norton®

OVERVIEW

Introduction

Norton Door Controls offers a comprehensive line of door controls designed and manufactured to ensure superior performance, reliability and application breadth.

Founded in 1880, Lewis C. Norton began Norton Door Check Company to manufacture and market the first practical commercial door closer. In the later years, *Norton* refined the rack and pinion closer and the concept of valve-controlled backcheck for hydraulic closers. Along the way there have been a variety of other innovations, including the aluminum alloy body, narrow style, non-handed closers, adjustable backcheck, speed adjustments and special application arms.

Today Norton® offers traditional surface, industrial economy, overhead concealed, commercial and architectural grade closers. To complement the closers, *Norton* also offers a unique range of arms to help provide maximum door and frame protection. With ADA and electrified options such as the PowerMatic®, virtually any architectural safety and barrier code requirement can be met.

For a complete copy of all *Norton* catalogs and additional technical information, contact your local sales representative or visit us at www.nortondoorcontrols.com

Table of Contents

Finishes 3

Applications 4-5

Institutional Closers
- 7700/7500 6
- 7700STP 7
- 7770/7570 7
- 7900/7970 12

Architectural Closers
- 8000 8

Utility/Storefront Closers
- 1600 9

Specialty Closers
- 78B/F 10

Light Commercial Closers
- 1700 11
- 9300BC 11

Electrified Closers
- Electromechanical 13
- Power Track® 14
- LEO™ 15
- PowerMatic® 16

SUGGESTED APPLICATIONS

	Light Commercial	Utility/ Storefront	Architectural	Institutional	Specialty	Electrical
Sized Surface Closers	1700, 9300BC	1600BC	8300/8500	7700	7200 78B/F	Multi-point Hold Open
Multi-Sized Surface Closers		1601	8301/8501	7500		
Security				7770/7570		
Overhead Concealed Closers				7900/7970		7290
Miscellaneous					Parallel Rigid Arms	Power Track® Single-Point Closer/Holder
					CloserPlus® Arms	
					CloserPlus® Spring Arms	5700 Series LEO™
					Unitrol® Arms	6900 PowerMatic® Automatic Operator

Norton Door Control Finishes
Sprayed Finishes
All Norton® Door Closers, CloserPlus®, CloserPlus® Spring, Unitrol®, Parallel Rigid Arms and Accessories are available in the following sprayed finishes. Order sprayed finishes by the *Norton* BHMA Designation.

Finish Description	Specify New *Norton* (BHMA) Designation	Old *Norton* Designation
Aluminum	689	AL
Statuary Bronze	690	STAT
Dull Bronze	691	DB
Black	693	315
Medium Amber	694	312
Gold	696	GB

Custom Finishes
Norton can provide custom sprayed and plated finishes subject to minimum quantity requirements and sample approvals. Please contact your *Norton* Technical Product Specialist for details.

Plated Finishes
All *Norton* Series 7500, 7700, 8500 and 8501 Door Closers are available in the following plated finishes for the closer and arm. Plated finishes must be ordered by the *Norton* finish (BHMA) designation.

When a plated finish is ordered, the arm and cover will be plated unless "cover only" is specified.

"E" in the finish signifies there are differences in base materials within the product itself and appearance. (i.e. steel arm vs plastic cover)

Finish Description	Specify New *Norton* (BHMA) Designation	Old *Norton* Designation	Covers	
			Metal	Plastic
Bright Brass	605E	US3	Yes	Yes
Satin Brass	606E	US4	Yes	No
Bright Bronze	611E	US9	Yes	No
Satin Bronze	612E	US10	Yes	No
Oxidized Satin Bronze, Oil Rubbed	613E	US10B	Yes	No
Bright Chrome	625E	US26	Yes	Yes
Satin Chrome	626E	US26D	Yes	No

* Product will be painted with a combination of waterborne acrylic and polyester powder coat.

A.D.A. Opening Force (BF)
the following door closers will meet the American With Disabilities Act (A.D.A.), and will comply with industry standards for opening and closing forces as established by ANSI A156.4.

7500 Series
8301, 8501 Series
1601BF closers
78-B/D closers (can be adjusted to comply)
7900BF closers

Specifications
Consult individual catalogs.

Certifications
Consult individual catalogs.

Closer Fluid
NorGlide™ is a proprietary closer fluid developed for Norton Door Controls. This specially formulated fluid contains lubricity and anti-oxidation agents that provide superior efficiency and performance. This fluid complements the interaction of the door closer's aluminum housing with its steel and zinc components, while maintaining stable viscosity to allow the door closer to perform in temperatures ranging from extremely high to as low as -40°F. *NorGlide* is used in all mechanical and electrified closers manufactured by Norton.

APPLICATION CHART

Closer Series	Arm Options								
	Regular	Top Jamb	Parallel	Parallel Rigid	CloserPlus®	CloserPlus® Spring	Unitrol®	Slide Track	Low Profile
7700/7500	x	x	x	x	x	x	x	x	x
7770/7570	x		x	x	x	x		x	
8000	x	x	x	x	x	x	x	x	x
1600BC	x	x	x	x	x	x	x		x
1700	x	x	x						
9300BC	x	x	x						
78B/F	x		x	x			x		
7200		x						x	

APPLICATIONS

Shown with 8501 closers

Regular Arm - pull side

Parallel Arm - push side

Top Jamb - push side

Parallel Rigid Arm - Heavy Duty

CloserPlus® Arm - Heavy Duty (Hold Open)

CloserPlus® Spring Arm - Heavy Duty

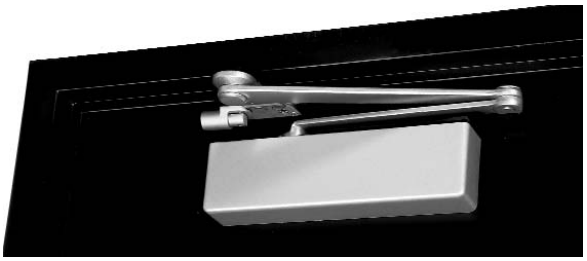

Unitrol® Arm - Heavy Duty - parallel arm shown (top jamb also available)

Slide Track - pull side application shown (push side also available)

Low Profile Arm

Arms have reduced height elbow joint and straight main arm. Allows door closer to be installed in less vertical space.

7700/7500 SERIES

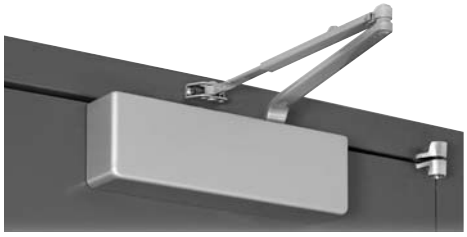

Regular Arm

Top Jamb

Parallel Arm

Features

- ANSI A156.4, Grade 1
- Non-handed
- UL listed and compliant with UL10C for positive pressure
- Standard, separate and independent, latch, sweep and backcheck intensity valves
- 2-1/8" (54mm) projection (standard covers)
- All standard arm applications (with slim, full or metal covers) allow doors to swing 180°, conditions permitting
- Staked valves
- Metal cover (optional)
- Delayed action (optional)
- PR, CLP, CPS, UNL & ST arm and track (optional)
- Enhanced Backcheck (optional)
- 10-year warranty

	7700	7500
Sized springs 2,3,4,5,6 with 50% additional adjustment	X	
Adjustable spring sizes 1 through 6		X
Bi-pack standard (regular arm and top jamb mounting)	X	
Tri-Style® standard (regular arm, top jamb and parallel arm mounting)		X
Optional corrosion resistant model (non-hold open only)		X
ADA compliant		X

COMPLIANCE STANDARDS

The series 7500 door closers are designed to comply with requirements of the Americans with Disabilities Act (A.D.A.) and ANSI standard A117.1. All series 7700/7500 comply with ANSI A156.4 Grade 1 Specification. UL All *Norton* series 7700/7500 closers with non-hold open arms are listed by Underwriters' Laboratories for labeled fire doors. This includes compliance to UL10C and UBC-72 (1997) for 3-hour assemblies. The product is manufactured in an ISO 9001 facility. These closers are also listed by California State Fire Marshal and Equipment Acceptance Division.

7700STP POCKET DOOR

Contemporary design concept which conceals door closer hardware from view. Used for cross corridors in elevator lobbies in high-rise buildings, hospitals, schools and similar applications. In the pocket door concept, the open door is flush with the wall, and hardware is out of sight except for door hardware such as a knob or lever.

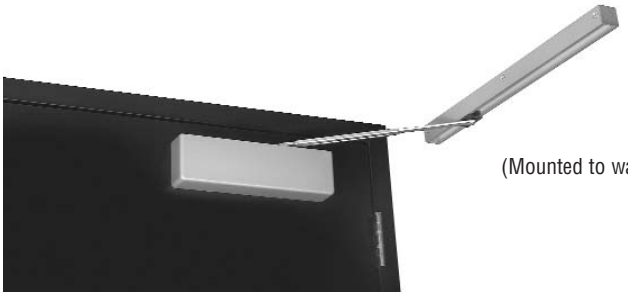

(Mounted to wall)

Features

- ANSI A156.4, Grade 1
- Controlled by building Emergency Alarm Systems - provide complete control of door in an emergency situation
- UL listed for pocket door applications
- 10-year limited warranty

SECURITY CLOSERS

Designed for use in prisons, correctional facilities, government buildings, school, etc.

7770/7570

- ANSI A156.4, Grade 1
- Adjustable backcheck cushioning and positioning
- Security arms - joints feature permanent, orbital riveted elbow and arm shoe/soffit plate joints which prevent disassembly
- UL listed
- PR, CLP & CPS arms (optional)
- Slide track arm - push or pull side (optional)
- Delayed Action (optional)
- Enhanced Backcheck (optional)
- 10-year limited warranty

Includes Security Cover, Security Arm and TORX screw package.
7770 – Sized closer
7570 – Multi-sized closer

7570 Shown

8000 SERIES

Regular Arm

Parallel Arm

Features

- ANSI A156.4, Grade 1
- Non-handed
- UL listed and compliant with UL10C for positive pressure
- Staked valves
- Standard, separate and independent, latch, sweep and backcheck intensity valves
- 2-1/8" (54mm) projection (standard covers)
- All standard arm applications (with slim, full or metal covers) allow doors to swing 180°, conditions permitting
- 8300/8301 shipped with molded slim-line plastic cover
- 8500/8501 shipped with molded full plastic cover
- Available with PR, CLP, CPS, UNI, ST arm and track options
- Delayed Action (optional)
- 10-year warranty

	8300	8500	8301	8501
Sized springs 2, 3, 4, 5, 6 with 50% additional adjustment	X	X		
Adjustable spring sizes 1 through 6			X	X
Metal and Architectural covers optional		X		X
Bi-pack packaging standard (regular arm and top jamb mounting)	X	X		
Tri-Style® standard (regular arm, top jamb and parallel arm mounting)			X	X
ADA Compliant			X	X

Architectural Cover

* For architectural covers consult factory for doors opening more than 130°.

COMPLIANCE STANDARDS

Series 8301 and 8501 door closers are designed to comply with requirements of the Americans with Disabilities Act (A.D.A.) and ANSI standard A117.1. All series 8300/8500/8301/8501 comply with ANSI A156.4 Grade 1 Specification. UL All *Norton* series 8300/8500/8301/8501 closers with non-hold open arms are listed by Underwriters Laboratories for labeled fire doors. This includes compliance to UL10C and UBC-72 (1997) for 3-hour assemblies. The product is manufactured in an ISO 9001 facility. These closers are also listed by the New York City Materials and Equipment Acceptance Division.

1600 SERIES

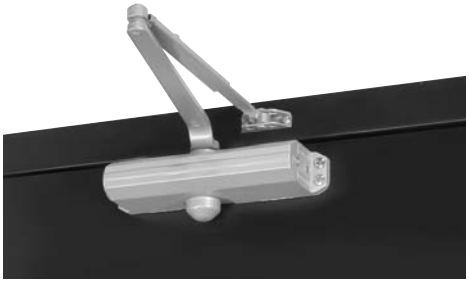

Regular Arm

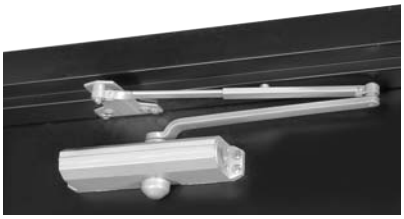

Parallel Arm

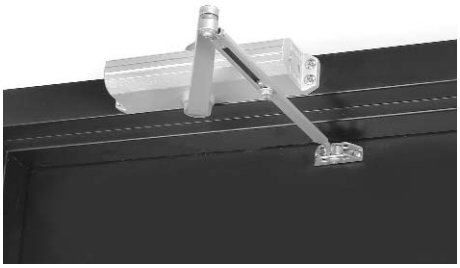

Top Jamb

Features

- ANSI A156.4, Grade 1
- Non-handed
- Standard, separate and independent, latch, sweep and backcheck cushioning valves
- Staked valves
- 2-7/8" (73mm) projection
- Tri-Style® standard (regular arm, top jamb and parallel arm mounting)
- All standard arm applications allow doors to swing 180°, conditions permitting
- UL listed and compliant with UL10C for positive pressure
- Available with PR, CLP, CPS and UNI arm options
- Molded Plastic cover (optional)
- 10-year warranty

	1600BC	1601	1601BF
Sized springs 2, 3, 4, 5, 6 with no power adjustment	X		
Adjustable spring sizes 3 through 6		X	
Adjustable spring sizes 1 through 4			X
ADA Compliant			X
Delayed action option (in lieu of backcheck)		X	X
Optional corrosion resistant model (non-hold open only)		X	X
Optional molded plastic cover	X	X	X

COMPLIANCE STANDARDS

The series 1601BF door closers are designed to comply with requirements of the Americans with Disabilities Act (A.D.A.) and ANSI standard A117.1. All series 1600BC/1601(BF) comply with ANSI A156.4 Grade 1 Specification. All *Norton* series 1600BC/1601(BF) closers with non-hold open arms are listed by Underwriters Laboratories for labeled fire doors. This includes compliance to UL10C and UBC-72 (1997) for 3-hour assemblies. The product is manufactured in an ISO 9001 facility. These closers are also listed by New York City Materials and Equipment Acceptance Division.

78B/F SERIES

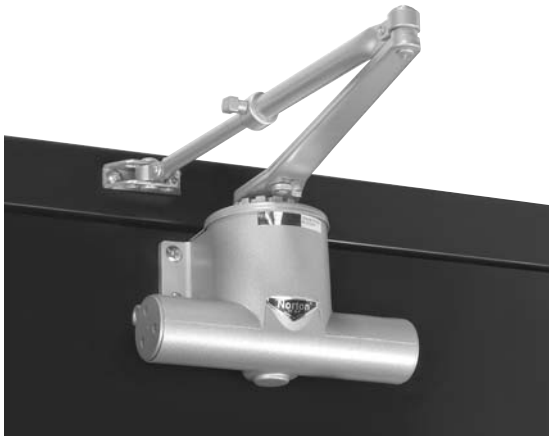

Regular Arm

Parallel Arm

Features

- ANSI A156.4, Grade 3
- Choice of adjustable spring power
  - B/D - Spring size 2, 3, or 4 (can be adjusted to comply with ADA)
  - E/F - Spring size 5 and 6
- Adjustable sweep/latch speed
- Adjustable backcheck cushioning
- Handed (Closer spring can be reversed in the field)
- PR & UNI arms available
- Delayed Action (optional)
- DA units - must specify hand when ordering; not field reversible
- UL listed and compliant with UL10C for positive pressure
- 10-year limited warranty

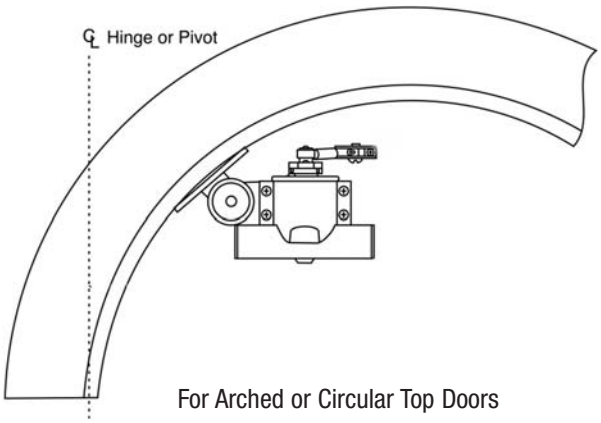

For Arched or Circular Top Doors

9300BC SERIES

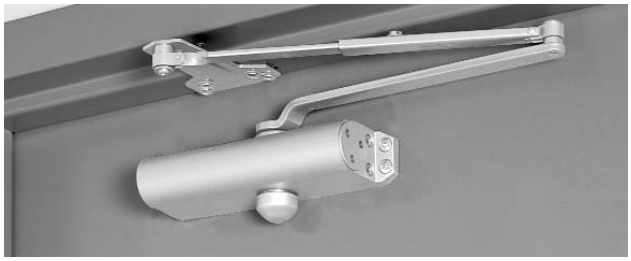

Parallel Arm

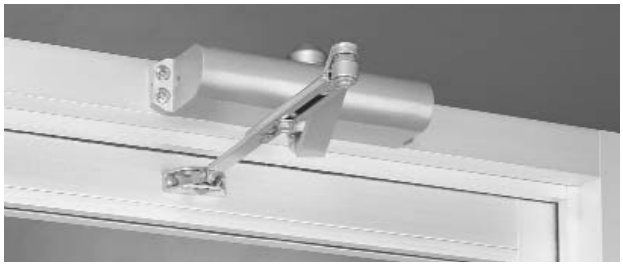

Top Jamb

Features

- ANSI A156.4, Grade 3
- Designed for commercial exterior and interior doors such as front store and industrial applications
- Spring size 2, 3, 4 or 5
- Separate and independent valve for sweep speed and latch speed
- Adjustable backcheck standard
- Non-handed
- Regular and top jamb mount standard. No prefix
- Parallel mount optional - “P” prefix
- Non-hold open arm supplied standard
- Friction hold open arm optional
- UL listed and compliant with UL10C for positive pressure
- 5-year limited warranty

1700 SERIES

1700 x COV

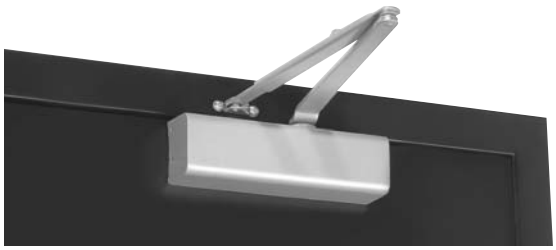

1700

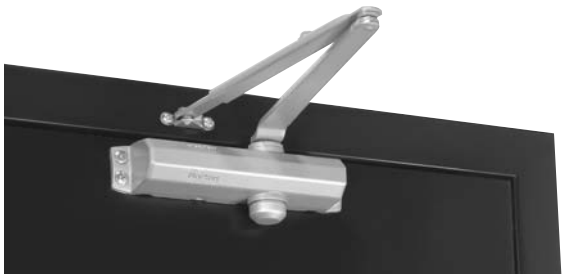

Features

- ANSI A156.4, Grade 2
- Intended for use on interior doors of apartments, hotels and other light-duty commercial buildings
- Spring size 1, 2, 3, or 4
- Installs regular arm, parallel arm or top jamb
- Non-handed
- Independent adjustable sweep and latch speeds
- Optional full cover
- Hold open arms available - suffix “H” to catalog number
- UL listed and compliant with UL10C for positive pressure
- Backcheck optional - suffix BC
- 5-year limited warranty

7900/7970 SERIES

The 7900 Overhead closers are best suited for high-profile applications such as office buildings or conference centers. The 7970 security closers offer the necessary concealment and tamper resistance required in detention and psychiatric facilities. Used in conjunction with the door position switch (DPS), it provides the ability to monitor door status remotely.

Features

- ANSI A156.4, Grade 1
- Steel track
- Steel slider
- Fully adjustable, multi-point hold open (7900)
- Shock absorbing door stop
- Adjustable sweep speed
- Adjustable latch speed
- Adjustable backcheck cushioning
- Adjustable backcheck positioning
- Handed
- Power Choices
  - Sized closer (4, 5, 6)
  - Multi-size closer (0)
- Installs with butt hinges, offset or center hung pivots
- Installs in hollow metal, aluminum or wood doors and frames
- Models available to meet ADA/A117.1
- UL listed
- Door Position Switch (DPS) option (Order 7970DPS)
- Torx® screws furnished standard (Order 7970DPS)
- 790 Fire Block
- 10-year limited warranty

Pull (Hinge) Side Mounting

7210 Shown

Features

- ANSI A156.15
- Multi-point hold open
- Pull or push side mounting
- Handed
- Closer size 3, 4 or 5
- **Infinite hold open (I Suffix)** - door will hold open at any degree of opening up to 175°. Maximum opening 180°
- **Selective hold open (S suffix)** - door will hold open at any degree of opening beyond a pre-set hold open point, up to 175°. Maximum opening 180°. Factory set at 80°
- Radio Frequency option; RFI or RFS (Not UL listed for fire doors)
- Free swing arm available (Pull side 7240 series only)
- Voltage - 24VAC/DC or 120VAC
- Detectored or non-detectored units available
- UL listed
- 2-year limited warranty

Functions

- **Master Unit Series 7200MPD (I or S):** This unit contains an integral smoke detector, and a door closer with internal holder. The Master Unit can be used to control a single door or a pair of doors when used in conjunction with a Slave Unit.

- **Slave Unit Series 7200MPS (I or S):** The Slave Unit contains a door closer with internal holder only. The Slave Unit hold open function is controlled by the detector in the Master Unit. 24VDC only.

- **Support Unit Series 7200MP (I or S):** The Support Unit contains a door closer with internal holder only. These units install on either single doors or on both leafs of a pair of doors. Its hold open function is controlled by compatible UL listed smoke detection equipment such as area/ceiling smoke detectors.

- **Support Units are available for Overhead Concealed Closers.** Series 7290MP (I or S)

7700 & 8000 SERIES POWER TRACK®

Pull Side Mounting

Push Side Mounting

8500PTD **Master Units shown** **P7700PTD**

Norton® Series 8000 Power Track® combines either an 8305 or 8505 door closer with the Power Track® Holder assembly. All are narrow projection closers that feature regulating valves for sweep speed, latch speed and backcheck cushioning. The 8305 closer has a slim-style molded cover. 8505 closers are available with a choice of full cover options.

Features

- ANSI A156.15
- Selective single-point hold open
- Spring cushioned dead stop
- Spring size 5
- 24 VAC/DC or 120VAC, 60Hz
- Pull/Push installations - Prefix “P” for push side installation
- Fail-safe operation
- Available with or without smoke detector
- UL listed (All slave and support units are all UL listed for application with any compatible UL listed fire/smoke detection equipment)
- 2-year limited warranty

Norton Series 7700 Power Track® Controls combine a 7705 door closer with a Power Track® Holder assembly. This door closer is a modern type, narrow projection closer with cover.

Features

- **Master Unit-PTD:** This unit is comprised of an integral smoke detector, solenoid hold open mechanism in the slide track and a door closer. The Master Unit can be used to control a single door or a pair of doors in conjunction with either a Slave Unit or a Support Unit, with 24 Volt power input.

- **Slave Unit-PTS:** This unit is composed of a solenoid hold open mechanism in the slide track and a door closer. This unit is for installation on one leaf of a pair of doors when the other leaf is controlled by a Master Unit. The Slave Unit will only operate on 24VDC power from the Master Unit.

- **Support Unit-PT:** This unit is comprised of a solenoid hold open mechanism in the slide track and a door closer. These units can be installed on a single door or a pair of doors when controlled by compatible UL-listed detection equipment. They can also be used in conjunction with a Master Unit on a pair of doors when the Master Unit smoke detector signals conditions (standby, trouble/alarm) to an alarm system’s panel. The alarm panel controls the hold open function of both the Support Unit and the Master Unit.

5700 Series LEO™

Norton's 5700 Series introduces a new generation of power door operators. Today, the convenience of "hands-free" door opening is more popular than ever. The patented design of LEO™ is based on ease and simplicity. LEO installs in minutes rather than hours and consists of three basic components: inverter, motor and Norton's 1601 closer body.

What separates LEO from other operators is its ability to function as a standard door closer. When the door is opened manually, there is little resistance and the drive train and motor are not engaged. The 1601 closer, not the motor, controls the closing cycles.

Based on its dual functionality, ease of use and quiet operation, LEO offers the customer a unique choice!

5710 Shown

PATENTS

- Patent 5,881,497
- Additional patent pending

FEATURES & FUNCTIONS

- Ease of installation and setup
  - Simple instructions
- Application versatility and ease of adjustment
  - Push or pull side mounting available
- Operates as mechanical surface closer during close cycles or when door is opened manually or if power is turned off
  - Quiet operation
  - Acceptable for fire-rated doors
  - Spring force provides the feel of a normal manual door closer
  - Door can be opened manually if desired
- Norton® 1600 series door closer
  - Adjustable spring power
  - Backcheck valve
  - Sweep valve & latch valve
- Non-Handed
- Unit Activation Options
  - Wall switches
  - Motion sensor
  - Radio frequency device
- End-User On/Off Switch
- Hold Open options
  - 0-30 seconds (5 seconds minimum required for ADA and ANSI A156.19)
- Obstruction Detection
  - Motor stops if door is obstructed during an opening
  - Door closes under manual spring force

ELECTRICAL DATA

- Power Input: 120 VAC, 60Hz
- Current Draw: .6A
- Relay Output: DPDT
  Normally Open/Normally Closed (jumper)

CERTIFICATIONS

- C-UL US listed for use on fire and smoke barrier doors
- 1-year warranty (refer to current Norton® price book for terms & conditions)
- Meets requirements for Americans with Disabilities Act (ADA)
- Listed: ANSI/BHMA A156.19 (Low Energy Operators) and meets requirements of A156.4 (Door Closers)

6900 POWERMATIC®

The Norton® 6900 PowerMatic® is a "Low Energy" power door operator designed to automatically open and close doors with a low energy opening force. It functions using an A/C motor and hydraulic pump to activate a heavy-duty hydraulic door closer controlled by an Electronic Control Module (ECM) board.

- Application versatility and ease of adjustment
  - Handed units
  - Push or pull side mounting
  - Interfaces with electric hardware and integrates with access control systems
- Holds Open options
  - 0-30 seconds (5 seconds minimum required for ADA and ANSI A156.19
  - Choice of infinite hold open features
- Obstruction Detection
  - Door closes if it hits an obstruction while opening
  - Door re-opens once if it hits an obstruction while closing

6960 Shown

FEATURES/ FUNCTIONS

- *Norton* 7500 series door closer
  - Adjustable spring power
  - Backcheck Valve
  - Backcheck Position Valve
  - Sweep Valve
  - Latch Valve
  - Speed Control Valve
  - Pressure Adjustment Valve
- Power Assist selector switch
- Push and Go selector switch
- Motor startup delay adjustment
- Vestibule Function Delay adjustment (For sequencing two or more units)
- Door Hold Open Delay adjustment
- Single Pole Double Throw (SPDT) Relay Output
- Blow Open Function for Smoke Ventilation
- Presence Detector Input
- 24 VDC @ 1.2A output
- Selector Mode Switch (3 position)
  - OFF – Disables signal except blow open. Unit still powered
  - ON – Activates signal inputs for normal use
  - HOLD OPEN – Activates the unit to the hold open position indefinitely

ELECTRICAL DATE

- Power Input: 120 VAC, 60 Hz (+10%, -15%)
- Current Draw 1.5A
- Auxiliary Output 24 VDC @ 1.2A
- SPDT relay output for controlling electric strikes or electric locks not to exceed 1 amp @ 30 VDC

CERTIFICATIONS

- C-UL, UL for use on fire and smoke barrier doors
- Meets requirements for UL10C and UBC 7.2 for positive pressure
- 2-year warranty (as per current price list, terms and conditions)
- Americans with Disabilities Act (ADA)
- BHMA A156.19 for Low Energy and Power Assist operated doors

Norton®

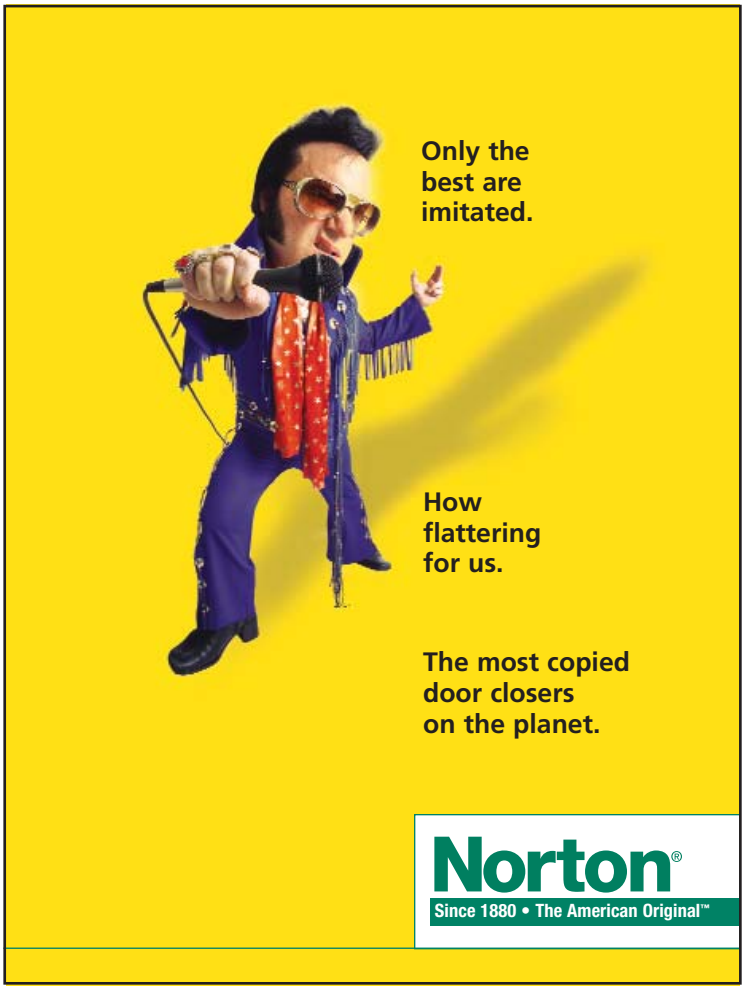

Norton Door Controls
1902 Airport Road
Monroe, NC 28110
Telephone: 1.800.438.1951
Fax: 1.800.338.0965

Yale-Corbin Canada Ltd
6940 Edwards Boulevard
Mississauga, Ontario, Canada L5T 2W2
Telephone: 1.800.461.3007
Fax: 1.800.461.8989

For a complete listing of products and applications please visit our web site.

www.nortondoorcontrols.com
www.yalecorbin.on.ca

Norton® PowerMatic® Unitrol®, CloserPlus®, Power Track®, NorGlide™ and Yale Security Inc.® are registered trademarks of Yale Security Inc. These materials are protected under U.S. copyright laws. All contents current at time of publication. Yale Security Inc. reserves the right to change availability of any item in this catalog, its design, construction, and/or its materials. Other product brand names may be trademarks or registered trademarks of their respective owners and are mentioned for reference purposes only.

Copyright 2002, 2005 Yale Security Inc. All rights reserved.

The ASSA ABLOY Group is the world's leading manufacturer and supplier of locking solutions dedicated to satisfying end-user needs for security, safety and convenience.

An ASSA ABLOY Group company

ASSA ABLOY

43021-5/05R