Norton Number 2
Overhead Door Holders

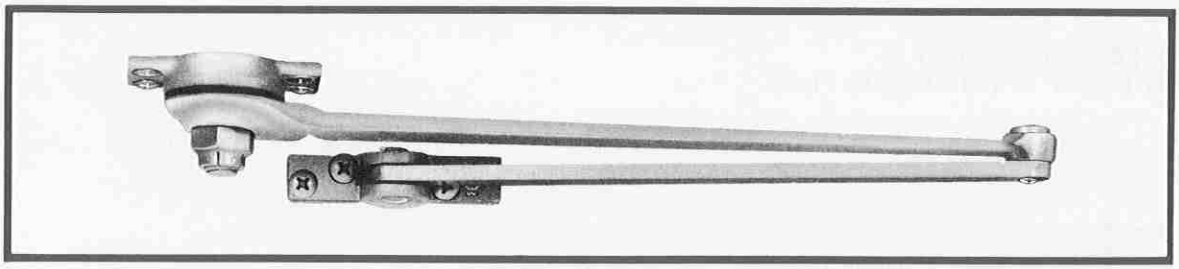

Application

Norton No. 2 Overhead Door Holder is for application on the inactive leaf of a pair of doors where the function and cost of a door closer is not warranted. It permits the inactive leaf to be held open when the full opening of the pair is required. It can also be installed on doors with a closer when it is desired to have the hold-open function separate from the door closer.

These handed door holders are for application on the push (stop) side of the door, and require a 1-1/2″ (38mm) minimum frame soffit width. The bracket with friction hold-open mechanism is mounted to the frame soffit. The fore-arm shoe is mounted to the top rail of the door, requiring a 1-3/4″ (44mm) minimum top rail. An auxiliary stop is recommended when this door holder is used.

This Door Holder is also available with a soffit bracket which extends the center line of the hold-open mechanism 5″ (127mm) from the surface of the door. This application provides arm geometry for the door holder installation that is similar to the door closer installation on the opposite door leaf. This door holder with soffit plate is also available with an angle bracket for installation on doors with a flush transom condition.

Features

Reliable Hold-Open Mechanism: Holder incorporates the same friction type hold-open mechanism used in all Norton Door Closers with Hold-Open arms.

Adjustable 90°-180° Hold-Open: Degree of door hold-open can be selected between 90° and 180° by template location and adjustment of the holder nut.

Rugged Construction: The forearm arm is heavy-gauge steel; the shoe, the main arm and soffit plate with mating friction surfaces are heavy cast iron.

Handed: Norton No. 2 Door Holder is handed. Specify hand on the order.

Available Finishes

Norton Number 2 Overhead Door Holders are available in the following sprayed finishes. Order sprayed finishes by the Norton Symbol.

Finish Description	Norton Symbol	BHMA Symbol
Aluminum	AL	689
Dull Bronze	DB	691
Dark Statuary Bronze	STAT	690
Black	315	693
Gold	GB	696
To Complement Duranodic		
Medium Amber	312	694
Dark Amber	313	695
Black	315	693
Corrosion Inhibitor		
Prime Coat*	SRI	600

*Available at extra cost. Yellow-green in color. Closers may be ordered prime coated only or prime coated with a finish coat, i.e. SRI x SB.

Push (Stop) Side Installation

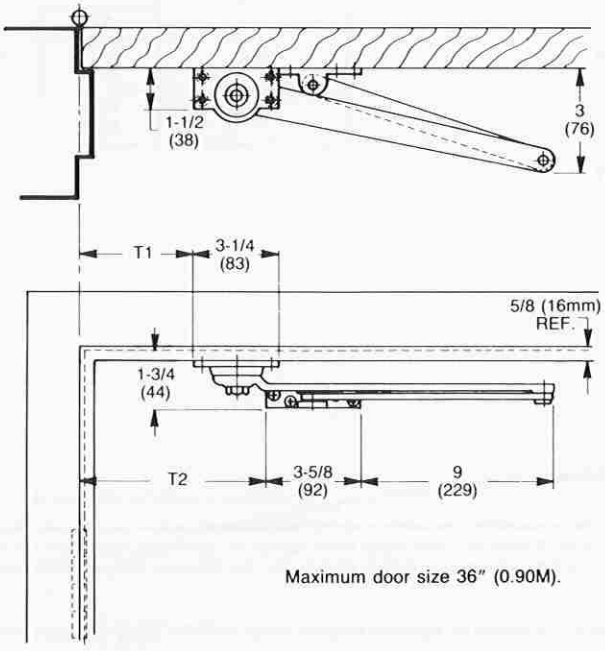

Maximum door size 36″ (0.90M).

Hold-Open	Template Position	
	T1	T2
90°	7-3/8 (187)	10-1/8 (257)
180°	4-3/8 (111)	7-1/8 (181)

All dimensions are inches (millimeters).

Norton Number 2
Overhead Door Holders

Push (Stop) Side Installation
No. 2 Door Holder × 1618D Soffit Plate

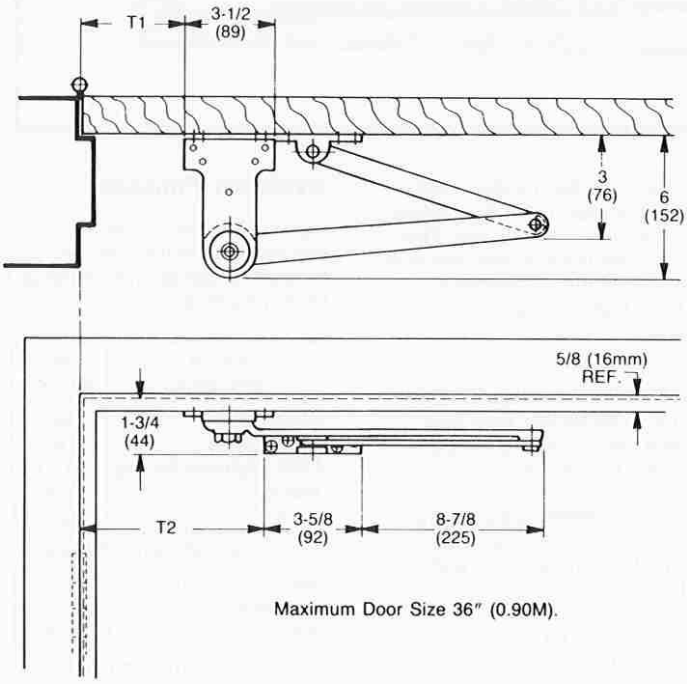

Maximum Door Size 36″ (0.90M).

Hold-Open	Template Position	
	T1	T2
90°	7-1/4 (184)	10-1/8 (257)
180°	4-1/4 (108)	7-1/8 (181)

Push (Stop) Side Installation
No. 2 Door Holder × 1618D Soffit Plate × 2022 Angle Bracket

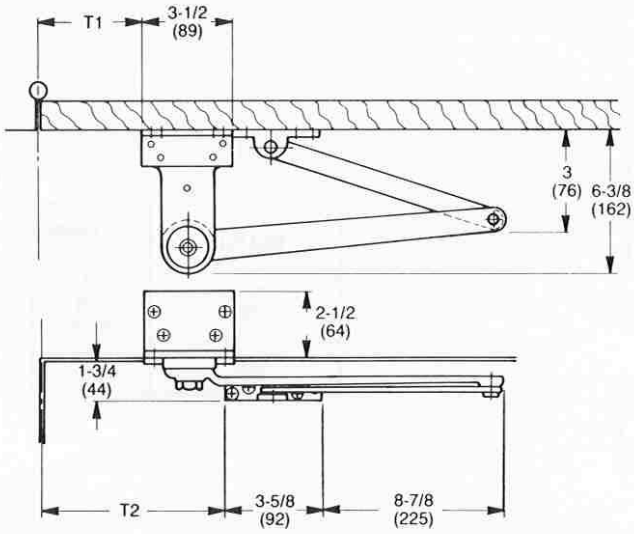

Maximum Door Size 36″ (0.90M).

Hold-Open	Template Position	
	T1	T2
90°	7-1/4 (184)	10-1/8 (257)
180°	4-1/4 (108)	7-1/8 (181)

All dimensions are inches (millimeters).

For more information contact your Norton Representative or Norton Door Controls, A Division of Yale Security Inc., 1902 Airport Road, Monroe, NC 28110. Telephone: (800) 438-1951. Fax: (800) 338-0965. In North Carolina: (704) 283-2101. Fax: (704) 289-2875. In Canada, 3160 Orlando Drive, Mississauga, Ontario, Canada L4V 1R5. Telephone: (905) 672-6220. Fax: (905) 672-9022. WATS: (800) 461-3007.

www.yalesecurity.com

These materials are protected under US copyright laws. All contents current at time of publication. Yale Security Inc. reserves the right to change availability of any item in this catalog, its design, construction, and/or its materials.

Yale®, Yale Security Products®, Yale Security Inc®, are registered trademarks.