Norton®

Since 1880 • The American Original™

1600BC
1601

Utility/Storefront Door Closers

An ASSA ABLOY Group company

ASSA ABLOY

OVERVIEW

Standard 1600 Features

- ANSI A156.4, Grade 1
- 10-year warranty
- Non-handed
- Rack-and-pinion design
- Cast aluminum body
- 1-3/8" (35mm) diameter piston
- 5/8" (16mm) diameter pinion journals
- Standard, separate and independent, latch, sweep and backcheck intensity valves
- 2-7/8" (73mm) projection
- Tri-Packed- packed for regular arm, top jamb and parallel arm installations.
- All standard arm applications allow doors to swing 180°, conditions permitting
- Molded Plastic cover (optional)
- Available with PR, CLP, UNI arm options
- UL10C

Optional Features	1600BC	1601	1601BF
Sized springs 2,3,4,5,6 with no power adjustment	X		
Adjustable spring sizes 3 through 6		X	
Adjustable spring sizes 1 through 4			X
ADA Compliant, ANSI A117.1			X
Delayed action option with pressure relief valve (in lieu of backcheck)		X	X
Optional corrosion resistant model (non-hold open only)		X	X

Table of Contents

Overview 2-3
How to Order 4
Fasteners/Finishes 5
Features 6
Optional Features 6-7
Suggested Specifications 8
Applications 9-11
Technical Details 12-17
Accessories 18-24
Parts List 25-32

Norton®

OVERVIEW

Cutaway of closer body

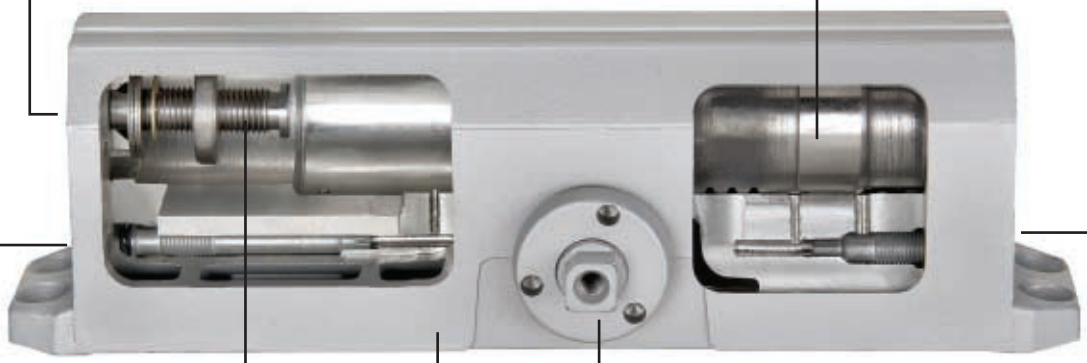

Spring omitted for illustration purposes

Compliance Standards

The series 1601BF door closers are designed to comply with requirements of the Americans with Disabilities Act (A.D.A.) and ANSI standard A117.1. All series 1600BC/1601(BF) comply with ANSI A156.4 Grade 1 Specification. UL All *Norton* series 1600BC/1601(BF) closers with non-hold open arms are listed by Underwriters` Laboratories for labeled fire doors. This includes compliance to UL10C and UBC-72 (1997) for 3-hour assemblies. These products are manufactured in a certified ISO 9001 facility. These closers are also listed by California State Fire Marshal and New York City Materials and Equipment Acceptance Division.

HOW TO ORDER

For optimum protection of door and frame assemblies, always use auxiliary wall, floor, or overhead door stop.

No Prefix } 1600BC series designates tri-packed, sized closer.
1601 series designates tri-packed, multi-sized closer.

J - Top jamb installation. Reveals in excess of 2-3/4 to 7"
P - 1600BC parallel arm units requiring specialty brackets.
- 1601 parallel arm units requiring specialty brackets.
- 1680BC low-profile closer.
- 1601SS corrosion resistant closer.

PR - Parallel rigid arm (parallel arm only) specify hand for hold open functions.

CLP - CloserPlus® arm (parallel arm only).

UNI - UniTrol® arm (parallel arm only - **specify door width**).

UNIJ - *UniTrol* arm (top jamb only - **specify frame reveal**).

J
PREFIXES

0 - Specifies standard arm.

8 - Specifies low-profile arm (use prefix "P" parallel arm.)

1 6
FIRST & SECOND DIGIT
Defines closer series

0
THIRD DIGIT
Specifies arm options

1 - Series 1601 power range 3 thru 6.

1BF - Series 1601BF power range 1 thru 4 for A.D.A. accessibility.

2BC - ANSI Size 2

3BC - ANSI Size 3

4BC - ANSI Size 4

5BC - ANSI Size 5

6BC - ANSI Size 6

3BC
FORTH DIGIT
Closer power sizing

H
SUFFIXES

None - Non-hold open arm function.

H - Hold open arm function (specify hand when "PR" prefix is ordered).

DA - Optional delayed action feature (in lieu of backcheck).

HOSP - 1603BC and 1604BC only. Hospital hold open (specify hand).

COUP - 1602BC and 1603BC only. Coupon booth hold open (specify hand).

TEL - 1602BC only - Telephone booth (non-handed).

SS - Series 1601/1601BF only. Corrosion-resistant closer. Available with non-hold open adjustable arm only; for regular arm, top jamb "J" prefix or parallel arm "P" prefix.

T - Thumbturn hold open on CloserPlus® (CLP) arm.

Note:
- Door closer warranty becomes void if it is installed on the exterior side of a door in the exterior wall of a building
- It is strongly recommended, and it is required on fire door assemblies, that doors having a door closer be hung on ball bearing or anti-friction hinges or pivots
- Failure to use the correct type and size fasteners may void factory warranty
- Fasteners for fire/smoke door assemblies must conform to NFPA 80. In some applications additional fasteners may be mandated by NFPA 80 that are not shipped with *Norton's* standard product, such as sleeve-nuts/sex-nuts or through-bolts and grommet nuts

Fasteners

All closers with standard non-hold open and hold open arms are shipped with self-drilling, self-tapping and machine screws. Sleeve nuts (SN) may be ordered as an option.

- PR, CLP, and UNI arms have sleeve nuts as part of the standard screw pack.
- Sleeve nuts (SN) are available for all other closers, and should be used on steel doors to prevent dimpling or where proper door reinforcement has not been provided.
- Standard sleeve nuts are for 1-3/4" (44mm) thick doors. Sleeve nuts for 1-3/8" (35mm) or 2-1/4" (57mm) door thicknesses are available and must be specified.
- Through-bolts and grommet nuts (TBGN) are another fastener alternative intended for wood doors. Specify door thickness 1-3/4" (44mm), 1-3/8" (35mm), 2-1/4" (57mm) when ordering.

Finishes

All door closers are painted in water-borne acrylics. All steel parts, arms, brackets and mounting plates are powder coated. The closers will withstand 100 hours of salt spray.

Sprayed Finishes

Description	Specify *Norton* (BHMA) Designation	Complements the following finishes	Old *Norton* Designation
Aluminum	689	628, 625, 629, 630, 651, 652	AL
Statuary Bronze	690	640, 613	STAT
Dull Bronze	691	612, 637, 639	DB
Black	693	315	315
Medium Amber	694	312	312
Gold	696	605, 606, 632, 633	GB
Prime Coat (Beige)*	600		SRI

* Available at extra cost. Closers can be ordered prime coated only, i.e.(SRI) or Prime Coated with finish, i.e. SRI x 690.

FEATURES

Aluminum Alloy Housing
Closer bodies are constructed of a special aluminum alloy, carefully selected to accommodate interaction with steel components and operating conditions.

Rack & Pinion Operation
Provides a smooth constant control of the door through its full opening and closing cycle. 180° door swing can be achieved when door, frame, hardware and arm function do not interfere.

Non-handed
With few exceptions all series 1600BC and series 1601 door closers are non-handed and can be installed on either right or left hand swing doors. Pinion shaft extends vertically through the closer body in both directions. This permits the closer to be positioned on either right or left hand doors for most applications. Some options, (such as Parallel Rigid Hold Open Arms) will require that the hand of the closer be specified.

Sweep Speed Control Valve
Allows adjustment of door speed from the doors full open position down to approximately 10° from the closed position.

Latch Speed Control Value
Allows adjustment of door speed from approximately 10° down to the door's fully closed position.

Tri-Style®
1600BC/1601(BF) comes with screws, brackets & soffit plate to allow for regular, top jamb, & parallel arm installations.

Adjustable Backcheck Cushion Valve
Provides control of the door in the opening cycle, beginning at approximately 75° of door opening. It slows/cushions the door opening, when the door is forcibly opened beyond its pre-adjusted opening speed limits.

Warranty
These closers carry a limited ten-year warranty against defects and a limited lifetime warranty on the aluminum housing.

Closer Fluid
NorGlide™ door closer fluid is a specially formulated hydraulic fluid that contains lubricity and anti oxidation agents that provide optimum performance and efficiency. This fluid complements the interaction of the door closers's aluminum housing with its steel and zinc components, while maintaining stable viscosity to allow the door closer to perform in temperatures ranging from extremely high to as low as -40° F.

Door Closer Power Options

Series 1600BC Sized Door Closer
Is available in five different power sizes (2, 3, 4, 5 or 6). As outlined in ANSI specification A156.4. Spring power is not adjustable.

Series 1601 Multi-sized Door Closer
Is adjustable through the power range of sizes 3 through 6; as outlined in ANSI specification A156.4.

Series 1601BF Multi-sized Door Closer
Is adjustable through the power range of sizes 1 through 4 to comply with the opening force requirements as outlined in the Americans with Disabilities Act (A.D.A.) and ANSI A117.1 for interior doors.

OPTIONAL FEATURES

Corrosion Resistant Door Closer
The series 1601SS and 1601BFSS door closers are available for use where corrosive conditions exist. This series is provided with zinc diecast adjustment valves, a 440 grade stainless steel pinion shaft, an all-aluminum body and bronze closer arm bushings; all other components and fasteners are of 302/303 grade stainless steel. This product is available for standard regular arm, top jamb and parallel arm, non-hold open, applications only.

Optional Molded Cover
Molded of high impact U.L. listed material that covers the entire closer body assembly. This cover is non-handed for all applications. Suffix "P" to catalog number.

OPTIONAL FEATURES DELAYED ACTION

Adjustable Delayed Action Closing

An optional hydraulic feature that adds a third speed range to the closing cycle. This feature becomes effective when the door is opened and released at any point beyond 70°. The amount of time delay depends upon the combination of the angle of door release and valve adjustment. The valve can be adjusted with a 1/8" (3mm) hex key from no delay time up to maximum delay times of:

Door Opened and Released at	Approximate Time of Delay Cycle
180°	4-5 minutes
120°	2-3 minutes
90°	25-30 seconds

Pressure Relief Safety Valve

The delayed action hydraulic system contains a pressure relief valve. Any time the door is forced toward the closed direction while it is in the closing cycle, the valve will open and permit the door to close. This prevents damage to door, frame and closer.

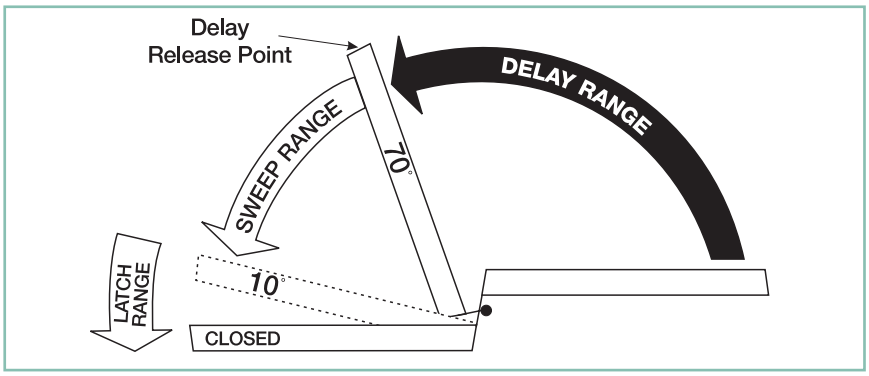

Suggested Applications

Delayed Action closing allows slow-moving traffic to clear the opening before the door closer's normal closing cycle begins. This feature can be helpful in health care facilities such as hospitals and nursing homes. It provides sufficient time for persons on crutches or in wheelchairs to pass through a door without concern of it closing. At the same time, it can accommodate the facility's staff with movement of food service carts, beds, and other wheeled traffic.

Use of delayed action closers on many doors throughout industrial and commercial buildings can also assist the flow of traffic. Locations where additional time to clear the opening is advantageous are doors between office and factory/warehouse facilities, doors to workshops or laboratories, to kitchen and food processing areas... to list just a few.

OPTIONAL FEATURES ARMS

Non-Hold Open

Self-closes door every time door is opened. Auxiliary stop (by others) required except when using the CloserPlus or Unitrol Arms.

Hold Open

Achieved by means of friction or ball and detent/roller. Friction hold open has a range of 90° to 180° using template location and mechanical adjustment.

Ball and detent or roller hold open is effective in a range of 85° to 110°.

Hold open arm door closers are not permitted to be used on fire door assemblies.

Door Opening Degrees

Arm Function	Regular Arm, Top Jamb Parallel Arm	Parallel Rigid Arm	CloserPlus® Parallel Arm	Unitrol® Parallel Arm	*Unitrol* Top Jamb	Low Profile Regular, Parallel
NON-HOLD OPEN	✓	✓	85° TO 110°	85° TO 110°	85° TO 110°	✓
HOLD OPEN	90° TO 180°	85° TO 180°	85° TO 110°	85° TO 110°	85° TO 110°	N/A

✓=180° trim and template permitting

SPECIAL FUNCTION DOOR CLOSER

Series 1600BC Special Function Door Closers

Telephone Booth Operation
Closer holds the door to the telephone booth open at 5° from the closed position. This prevents the light switch from being activated and allows the booth to be ventilated. It also indicates to users that the booth is unoccupied. Available in size 2 only for regular arm or top jamb application only.

Coupon Booth Hold Open
Most commonly used on doors to safe-deposit box inspection cubicles. Closer holds the door to the booth open at 15° to indicate that the booth is available for use by a safe-deposit box renter. When the door is opened beyond 70°, the closer will close the door and engage the lock, providing the occupant with the desired privacy.

Available in sizes 2 and 3 only for regular arm, top jamb or parallel arm application.
Specify hand.

Hospital Hold Open
Closer will hold door open at approximately 15° for ventilation, 45° for observation and beyond 90° for full access.

Closer is supplied with a standard hold open arm for the beyond 90° hold open position. Available in sizes 3 and 4 only for regular arm, top jamb or parallel arm application. Specify hand.

SUGGESTED SPECIFICATIONS

1601 Series

Closers for interior and exterior doors shall be full rack-and-pinion type with cast aluminum alloy shell. Closers shall be surface mounted and shall project no more that 2-7/8" from the surface of the door. Closers shall be non-handed to permit installation on doors of either hand. Closer fluid shall contain lubricity and anti-oxidation agents. Closer fluid shall maintain stable viscosity to allow door closer to perform in temperatures ranging from extremely high to as low as -40°F. Closers shall have multi-size spring power adjustment to permit setting of spring from (1 through 4) or (3 through 6). Closers shall have two non-critical valves, hex key adjusted, to independently regulate sweep and latch speed. Closers shall have adjustable backcheck cushioning controlled by a hex key adjusted valve.

[Closers shall have adjustable delayed-action closing controlled by a hex key adjustable valve.]

[Closers shall be highly corrosion resistant and shall have all external body components of aluminum, zinc alloy or stainless steel material and all stainless steel fasteners.]

Regular arm and top jamb closers shall have a non-hold open shoe permitting 15% (+/- 7-1/2%) power adjustment. ** [1601] [1601BF] [1601SS].

**For special arms insert the appropriate specification from column three on this page.

1600BC Series

Closers for interior and exterior doors shall be full rack-and-pinion type with cast aluminum alloy shell. Closers shall be surface mounted and shall project no more that 2-7/8" from the surface of the door. Closers shall be non-handed to permit installation of doors of either hand. Closer fluid shall conatin lubricity and anti-oxidation agents. Closer fluid shall maintain stable viscosity to allow the door closer to perform in temperatures ranging from extremely high to as low as -40°F. Closers shall be sized for each door. Closers shall have two non-critical valves, hex key adjusted, to independently regulate sweep and latch speed. [Closers shall have adjustable backcheck cushioning controlled by a hex key adjusted valve.]

[Closers shall have adjustable delayed action closing controlled by a hex key adjusted valve.]

Regular arm and top jamb closers shall have a non-hold open shoe permitting 15% (+/- 7-1/2%) power adjustment.** [1600BC].

**For special arms insert that specification here (see column three on this page).

**Unitrol® Arm

Door closers shall have built in-door stop [and holder] effective at one point selected at installation, from 85° - 115° in five-degree increments. Door stop shall be cushioned by a shock-absorbing heavy duty spring action effective at the [soffit plate] [arm shoe] pivot. [Closers shall be provided for parallel arm installation using rigid steel main arm and secondary arm lengths proportional to the door width to reduce racking at the hinge/pivot] [Closers shall be provided for top jamb installation using steel, rigid main arm and telescoping secondary arm adequate for the frame reveal of the openings]

**CloserPlus® Arm

Door closers shall have built-in door stop [and holder] effective at one point selected at installation, from 85° - 110° in five degree increments. Door stop mechanism shall be reversible and attached to soffit plate. [Hold open mechanism shall have engage/disengage selection actuated by thumbturn]. Closers shall be provided for parallel arm installation using rigid steel main and secondary arm.

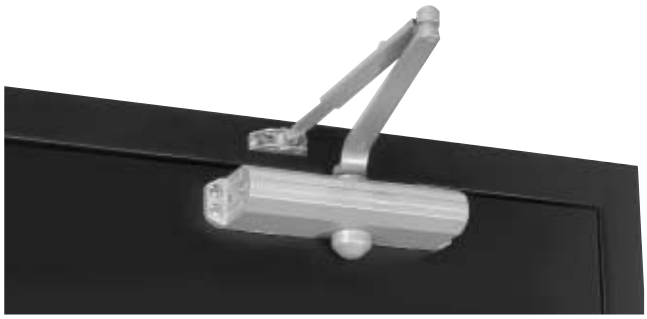

*Non-hold open arm shown.

Regular Arm

This is the only pull-side application where a double lever arm is used. It is the most power-efficient application for a door closer. Sufficient frame, door and/or ceiling clearance must be considered.

Since the arm assembly projects directly out from the frame, this application may present an aesthetics issue or be prone to vandalism.

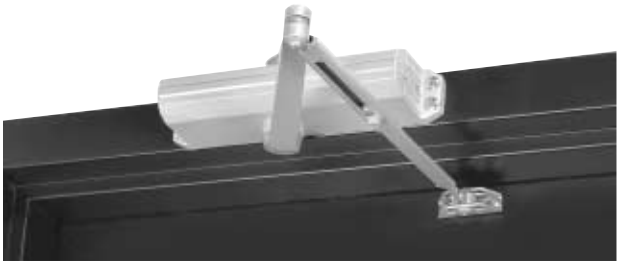

*Non-hold open arm shown.

Top Jamb

For efficiency reasons this application provides the best alternative to the regular arm application. There must be sufficient frame face and/or ceiling clearance for this application. It requires a top rail on the door of just 2-1/8″ (54mm). This application provides the best door control for doors in exterior walls that swing out of a building.

The entire door closer and arm assembly project from the frame, similar to the regular arm application, where the matters of appearance and malicious abuse can be of concern.

Consideration must be given to depth of the frame reveal.

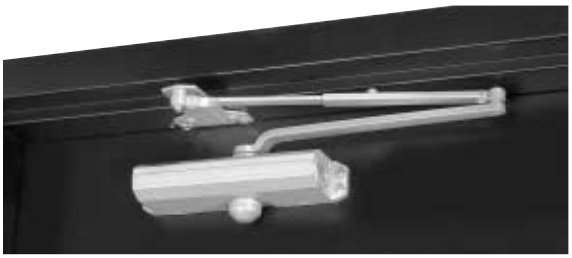

*Non-hold open arm shown.

Parallel Arm

This application provides the most appealing design appearance for a surface-mounted door closer having a double lever arm. This may also be beneficial in vandalism-prone areas. It is on the push side of the door and the arm assembly extends almost parallel to the door. In the closed position, there is very little or no hardware projecting beyond the frame face in most situations.

Due to the geometry of the arm it is approximately 25% less power-efficient than a regular arm application.

The entire closer and arm assembly are mounted below the frame stop, requiring a top rail clearance on the door of between 5-3/8″ (137mm), when using a low-profile arm (1680 series), to 6-3/8″ (162mm), when using the hold open arm.

APPLICATIONS

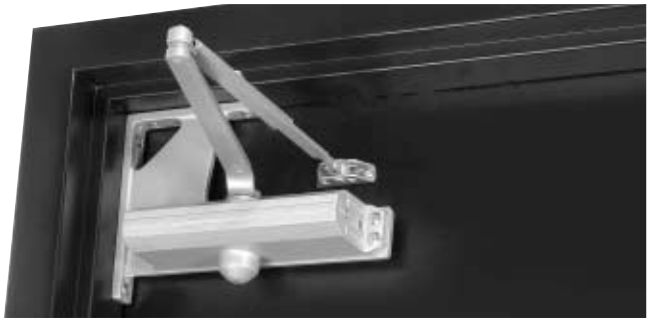

Corner Bracket

This application can be used where top jamb and parallel arm application will not accommodate the door and frame conditions. Requires minimal top rail on the door; however, vertical clearance to the floor within the door opening should be checked to ensure code compliance.

The close proximity, for this application, of the door closer to the door's pivot point reduces the door closer's power efficiency by approximately 25% when compared to a regular arm. The projection of the arm from the door face might pose questions regarding design parameters or environment.

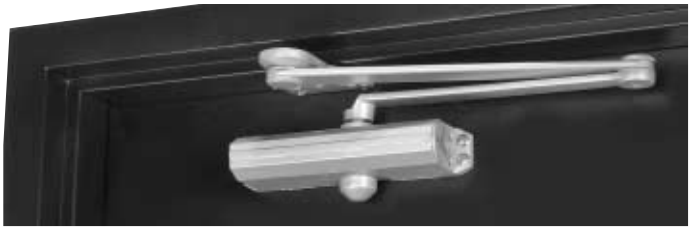

*Non-hold open arm shown.

Parallel Rigid Arm

An enhanced variation of the standard parallel arm assembly that is intended for use in heavy traffic areas where auxiliary door stops are installed.

Hold Open arm available - specify hand when ordering

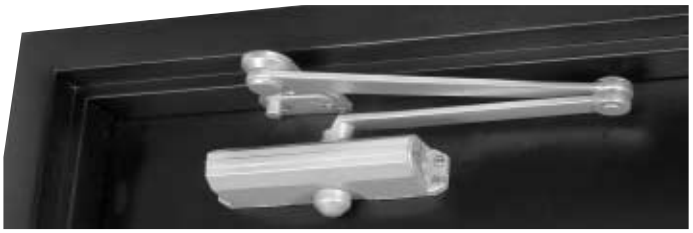

*Non-hold open arm shown.

CloserPlus® Arm

Similar to the Parallel Rigid arm, this arm incorporates a stop at the arm's soffit plate to dead stop the door at a predetermined degree of door swing between 85° and 110°, in 5° increments. Prior to dead stop the door closer's backcheck feature slows the door speed to reduce the impact of the stop action.

CloserPlus Arm is intended for use where an auxiliary door stop cannot be utilized and no more than moderate abuse is anticipated. Where more extreme conditions are expected, use of a Unitrol® arm is recommended.

Available with or without hold open. (Hold open is adjustable)

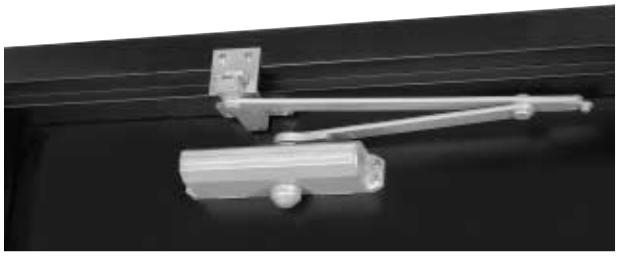

Parallel

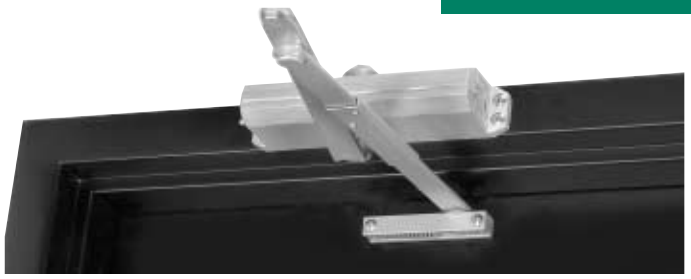

Top Jamb

Unitrol® Arm

Can be used for either parallel arm or top jamb applications. *UniTrol* arms combine the features of a double lever arm overhead door stop/holder with the backcheck feature of the door closer to reduce door stopping shock loads to a minimum. They use a compression spring buffer at the soffit plate/arm shoe that will absorb 30 lbs. of force, 5° prior to the door's dead stop. Coupled with the door closer's backcheck feature you can achieve the most controlled stop available with a surface door closer.

For parallel arm applications there are three different length arm assemblies. Each length is designed for a specific range of door widths, to provide precise door control. This further lessens the dead stop impact on the door's hinges/pivots.

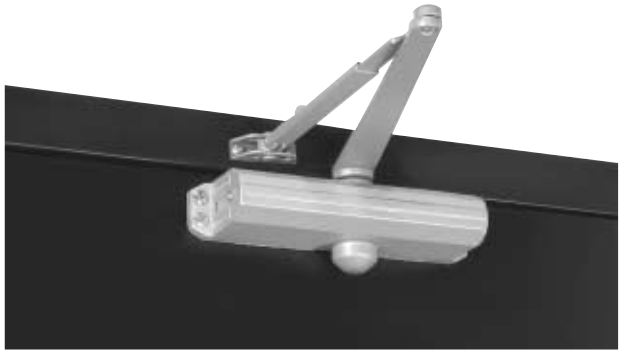

Regular Arm

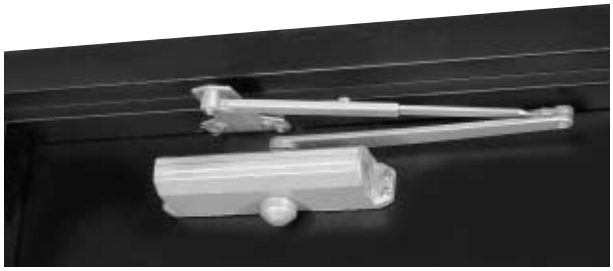

Parallel Arm

Regular Arm Allows closer to be installed where there is as little as 1" (25mm) of frame face or ceiling clearance.

Parallel Arm Allows closer to be installed 1/2" (13mm) higher up on door than standard parallel arm application.

Low-Profile Arm

Supplied with 1680,1681(BF) series door closers for non-hold open installations only. Low-profile arms have a reduced height elbow joint and a straight main arm. This enables the door closer to be installed in less vertical space.

REGULAR ARM

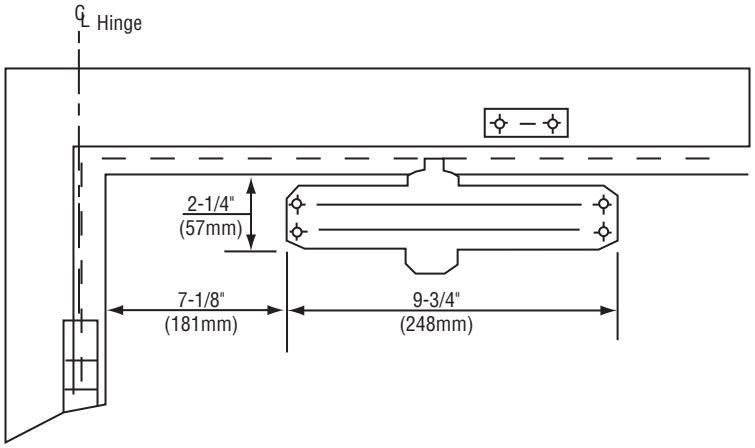

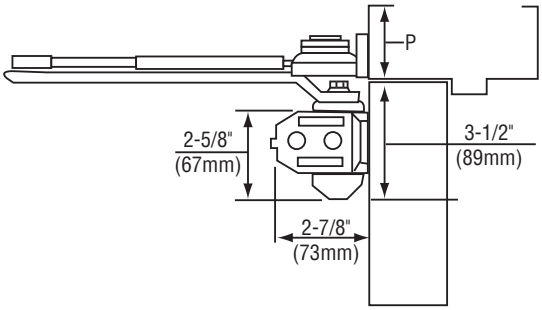

* For doors opening up to 100°
Mounting holes for closer body are spaced 3/4" (19mm) vertically x 9-1/16" (230mm) horizontally.

Maximum Door Size Inches (cm)		Catalog Number Sized Closers	
Interior	Exterior	Non-Hold Open	Hold Open
32" (81)	-	1602BC	1602BCH
38" (97)	30" (76)	1603BC	1603BCH
42" (107)	36" (91)	1604BC	1604BCH
48" (122)	42" (107)	1605BC	1605BCH
-	48" (122)	1606BC	1606BCH

Dimensional Information Shown In Inches/mm		
P Minimum Ceiling Clearance		
Non-Hold Open		Hold Open
1600BC/1601	1680BC/1681	
1-1/2" (38)	1" (25)	1-5/8" (41)

Note:
1601 Door Closers are adjustable for sizes 3 through 6, and are shipped set at size 4.

1601BF Door Closers are adjustable for sizes 1 through 4, shipped set at size 2 and can be adjusted to conform to ADA opening force requirements.

TOP JAMB

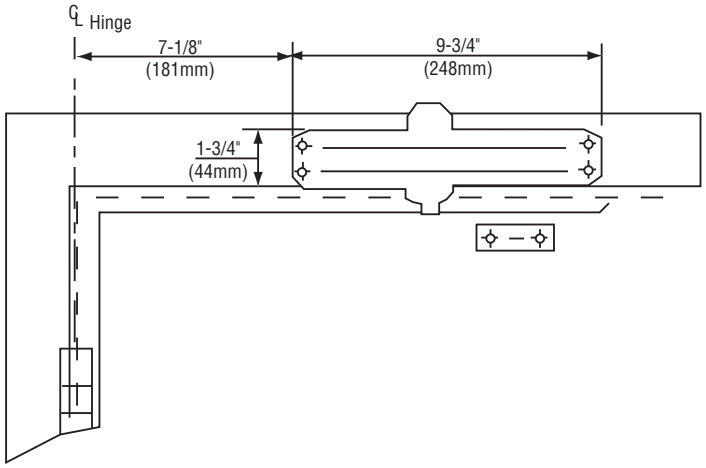

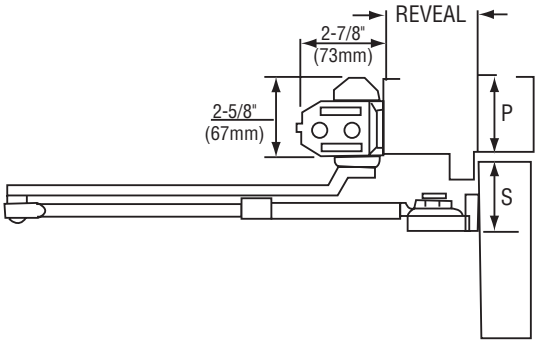

* For doors opening up to 100°
Mounting holes for closer body are spaced 3/4" (19mm) vertically x 9-1/16" (230mm) horizontally.

Maximum Door Size Inches (cm)		Catalog Number Sized Closers	
Interior	Exterior	Non-Hold Open	Hold Open
32" (81)		1602BC J1602BC J1682BC†	1602BCH J1602BCH
38" (97)	30" (76)	1603BC J1603BC J1683BC†	1603BCH J1603BCH
42" (107)	36" (91)	1604BC J1604BC J1684BC†	1604BCH J1604BCH
48" (122)	42" (107)	1605BC J1605BC J1685BC†	1605BCH J1605BCH
-	48" (122)	1606BC J1606BC J1686BC†	1606BCH J1606BCH

Dimensional Information Shown In Inches/ mm						
P Minimum Ceiling Clearance		S Minimum Top Rail Clearance				
Without Drop Plate	With Drop Plate	Without Drop Plate	With 1687 Drop Plate		With 1688 Drop Plate	
1600BC/ 1601	1600BC/1601 1680BC/1681	1600BC/ 1601	1600BC 1601	1680BC 1681	1600BC/ 1601	1680BC/ 1681
2-5/8" (67)	1-3/4" (44)	1-7/8" (48)	2-3/4" (70)	2-1/4" (57)	3-3/8" (86)	2-7/8" (73)

Note:
1601 Door Closers are adjustable for sizes 3 through 6, and are shipped set at size 4.
1601BF Door Closers are adjustable for sizes 1 through 4, shipped set at size 2 and can be adjusted to conform to ADA opening force requirements.

† **Narrow-Profile Arm Closers** can only be installed with 1687/1688 drop plate.
Non-Hold Open- Use standard 1600 closer for frame reveals between 0"- to 3" (0-76mm). Use Top Jamb J1600 closer for frame reveals from 3" to 7" (76 to 178mm).
Hold Open Use standard 1600H closer for frame reveals between 0" to 3" (0-76mm). Use top jamb J1600H closer for frame reveals from 2-3/4" to 6-3/4" (70 to 171mm).

Closer Series	Reveal Inches/mm
1600	0 to 3" (0 to 76)
J1600	2-7/8" to 7" (73 to 178)
1600H	0 to 2-3/4" (0 to 70)
J1600H	2-3/4" to 6-3/4" (70 to 171)

PARALLEL ARM

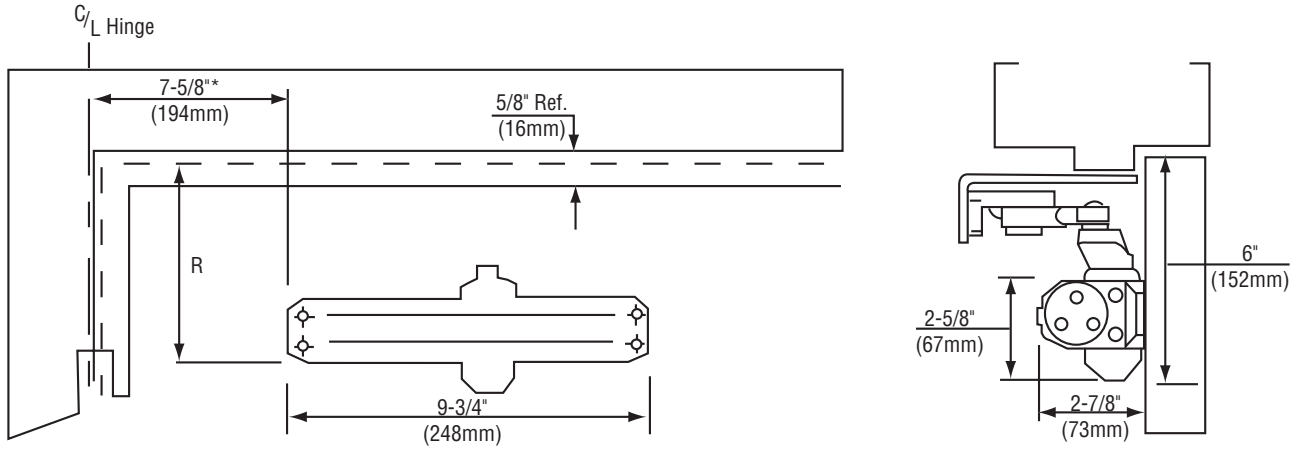

* For doors opening up to 100°
Mounting holes for closer body are spaced 3/4" (19mm) vertically x 9-1/16" (230mm) horizontally.

Maximum Door Size Inches (cm)		Catalog Number Sized Closers	
Interior	Exterior	Non-Hold Open	Hold Open
30" (76)	-	1602BC	1602BCH
36" (91)	30" (76)	1603BC	1603BCH
42" (107)	36" (91)	1604BC	1604BCH
48" (122)	42" (107)	1605BC	1605BCH
-	48" (122)	1606BC	1606BCH

R Minimum Top Rail of Door with 5/8" (16mm) frame stop			
Without Drop Plate Inches(mm)		With Drop Plate Inches(mm)	
1600BC/ 1601	1680BC/ 1681	1600BC/ 1601	1680BC/ 1681
5" (127)	4" (102)	3-1/8" (79)	2-1/8" (54)

Note:
This door sizing information also applies to corner bracket mounted closers.

1601 Door Closers are adjustable for sizes 3 through 6, and are shipped set at size 4.
1601BF Door Closers are adjustable for sizes 1 through 4, shipped set at size 2 and can be adjusted to conform to ADA opening force requirements.

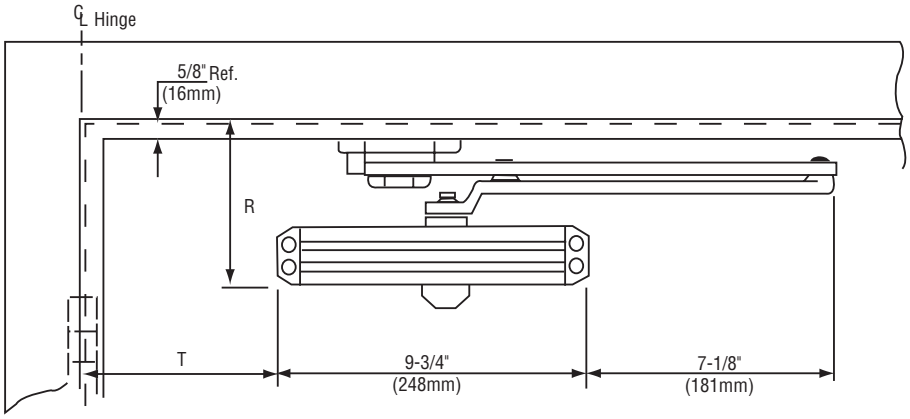

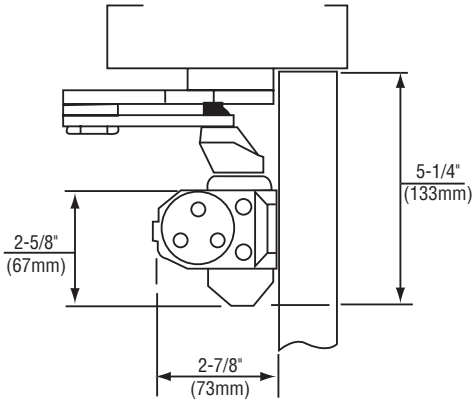

* For doors opening up to 100°
Mounting holes for closer body are spaced 3/4" (19mm) vertically x 9-1/16" (230mm) horizontally.

Door Size Wood or Metal Inches (cm)		CloserPlus® Catalog Number Sized Closers		Parallel Rigid Catalog Number Sized Closers	
Interior	Exterior	Non-Hold Open	Hold Open	Non-Hold Open	Hold Open
28"-32" (71-81)	-	CLP1602BC	CLP1602BCT	PR1602BC	PR1602BCH
33"-36" (84-91)	28"-32" (71-81)	CLP1603BC	CLP1603BCT	PR1603BC	PR1603BCH
37"-42" (94-107)	33"-36" (84-91)	CLP1604BC	CLP1604BCT	PR1604BC	PR1604BCH
43"-48" (109-122)	37"-42" (94-107)	CLP1605BC	CLP1605BCT	PR1605BC	PR1605BCH
-	43"-48" (109-122)	CLP1606BC	CLP1606BCT	PR1606BC	PR1606BCH

Note:
1601 Door Closers are adjustable for sizes 3 through 6, and are shipped set at size 4.

1601BF Door Closers are adjustable for sizes 1 through 4, shipped set at size 2 and can be adjusted to conform to ADA opening force requirements.

R Minimum Top Rail of Door		T Template Position For Hold Open or Stop at listed Angle					
Without Drop Plate(mm)	With Drop Plate(mm)	85°	90°	95°	100°	105°	110°
4-1/2" (114)	2-5/8" (67)	8-3/4" (222)	8" (203)	7-1/4" (184)	6-5/8" (168)	6" (152)	5-3/8" (137)

PARALLEL UNITROL® ARM

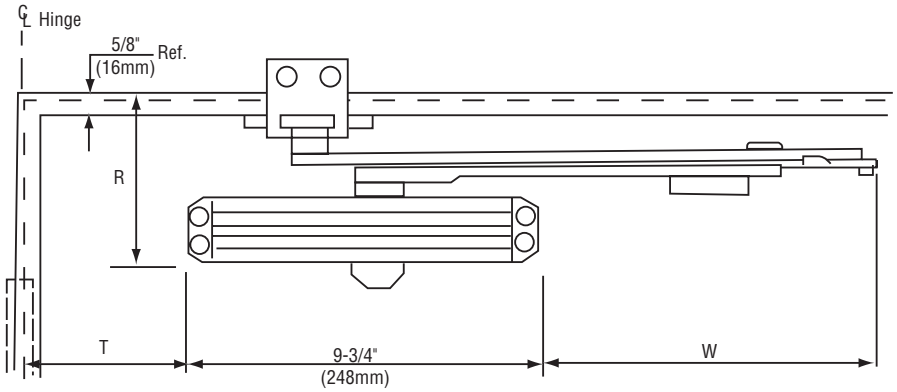

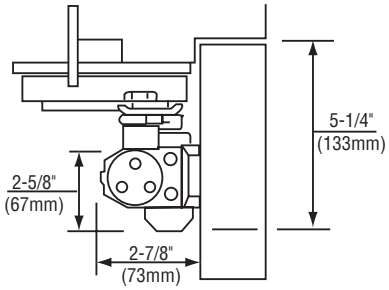

* For doors opening up to 100°
Mounting holes for closer body are spaced 3/4" (19mm) vertically x 9-1/16" (230mm) horizontally.

Door Width Inches (cm)	R Minimum Top Rail of Door		T Template Position For Hold Open or Stop at listed Angle						W Arm Extension Beyond Closer
	Without Drop Plate(mm)	With Drop Plate(mm)	85°	90°	95°	100°	105°	110°	
28"-32" (71- 81)	4-1/2" (114)	3-1/8" (79)	8-3/8" (213)	7-3/4" (197)	7-1/8" (181)	6-3/4" (171)	6-1/2" (165)	6" (152)	7-1/8" (181)
33"-41" (84- 104)			10-3/4" (273)	10 (254)	9-1/2" (241)	9" (229)	8-1/2" (216)	8" (203)	8-5/8" (219)
42"-48" (107- 122)			13" (330)	12-1/4" (311)	11-1/2" (292)	11" (279)	10-1/2" (267)	10" (254)	10-1/8" (257)

Door Size Wood or Metal Inches (cm)		Unitrol Catalog Number		
Interior	Exterior	Non-Hold Open	Hold Open	
28"-32" (71-81)	-	UNI1602BC	UNI1602BCH	**x Specify Door Width**
33"-36" (84-91)	28"-32" (71-81)	UNI1603BC	UNI1603BCH	
37"-41" (94- 104)	33"-36" (84-91)	UNI1604BC	UNI1604BCH	
42"-48" (107-122)	37"-41" (94-104)	UNI1605BC	UNI1605BCH	
-	42"-48" (107-122)	UNI1606BC	UNI1606BCH	

Note:
1601 Door Closers are adjustable for sizes 3 through 6, and are shipped set at size 4.

1601BF Door Closers are adjustable for sizes 1 through 4, shipped set at size 2 and can be adjusted to conform to ADA opening force requirements.

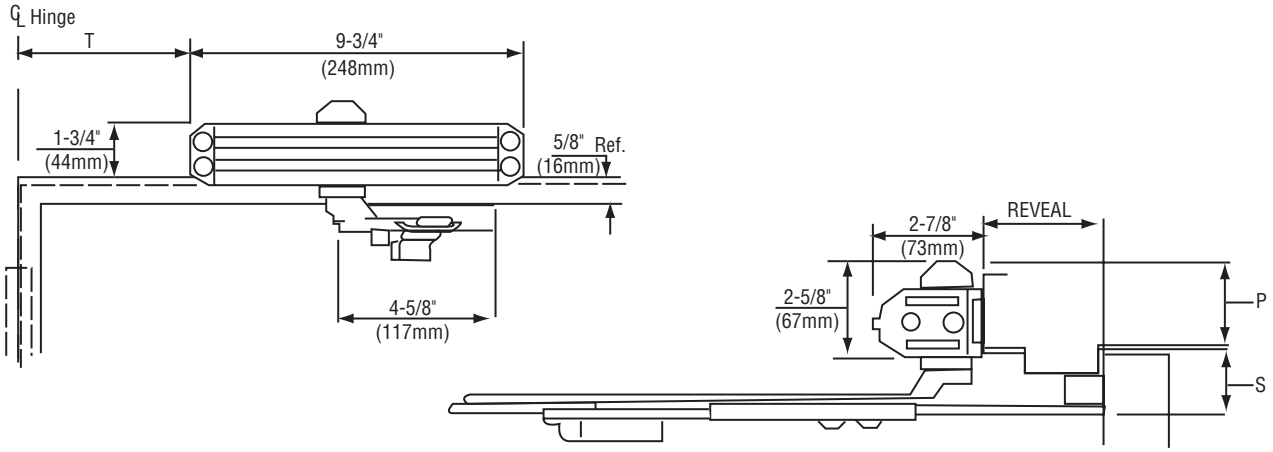

* For doors opening up to 100°
Mounting holes for closer body are spaced 3/4" (19mm) vertically x 9-1/16" (230mm) horizontally.

P Minimum Ceiling Clearance		S Minimum Top Rail Clearance		T Template Position For Hold Open or Stop at Listed Angle					
Without Drop Plate(mm)	With Drop Plate(mm)	Without Drop Pate(mm)	With Drop Plate(mm)	85°	90°	95°	100°	105°	110°
2-5/8" (67)	1-3/4" (44)	2-3/4" (70)	3-5/8" (92)	8-7/8" (225)	8-1/8" (206)	7-1/2" (191)	7-1/8" (181)	6-1/2" (165)	6-1/4" (159)

Note:
1601 Door Closers are adjustable for sizes 3 through 6, and are shipped set at size 4.

1601BF Door Closers are adjustable for sizes 1 through 4, shipped set at size 2 and can be adjusted to conform to ADA opening force requirements.

Door Size Wood or Metal Inches (cm)		Unitrol Catalog Number		
Interior	Exterior	Non-Hold Open	Hold Open	
28"-34" (71-86)	-	UNIJ1602BC	UNIJ1602BCH	**x Specify Frame Reveal**
35"-42" (89-107)	28"-32" (71-81)	UNIJ1603BC	UNIJ1603BCH	
37"-41" (94-104)	33"-36" (84-91)	UNIJ1604BC	UNIJ1604BCH	
42"-48" (107-122)	37"-41" (94-104)	UNIJ1605BC	UNIJ1605BCH	
-	42"-48" (107-122)	UNIJ1606BC	UNIJ1606BCH	

REGULAR ARM

Brackets for Non-Hold Open Arms

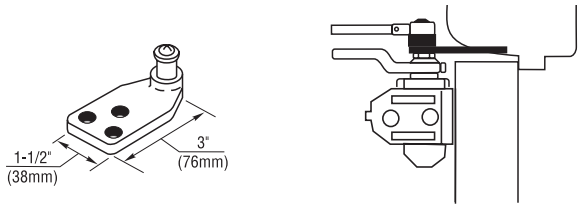

Molded/Bull Nose Trim - #2403 Bracket: For use where the door frame has molded or bull nose trim which will not accept a standard non-hold open shoe. The bracket is mortised into the frame rabbet, and projects beyond the face of the frame. It will accommodate a frame rabbet up to 2" (51mm) deep.

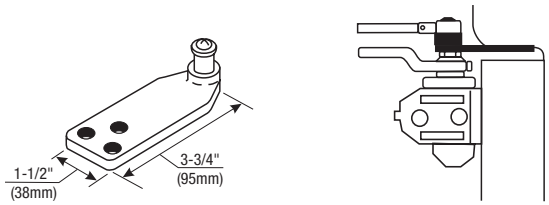

Molded/Bull Nose Trim - #2403-3/4 Bracket: This bracket is similar to-but longer than-the 2403 bracket. It is designed to accommodate frame rabbets from 2" to 2-7/8" (51mm to 73mm) deep.

Brackets for Hold Open Arms

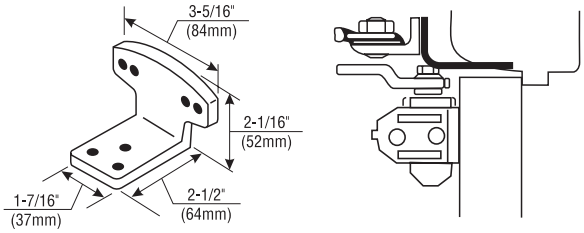

Molded/Bull Nose Trim - #80 Bracket: For use where the door frame has molded or bull nose trim which will not accept a standard hold open shoe. It is mortised into the frame rabbet, and projects beyond the face of the frame. It will accommodate a rabbet up to 2" (51mm) deep. This bracket is used in combination with the standard hold open mounting shoe.

Corner Brackets for Closer Mounting

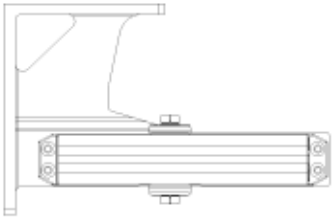

For Closer sizing information, use the Parallel Arm sizing chart on page 14.

Mounting Opposite Hinge Side - #1647 Corner Bracket: For use where it is desired to mount the closer regular arm on the opposite to hinge side of the door. Can also be used to clear an overhead door holder.

TOP JAMB

Closer Mounting Plates

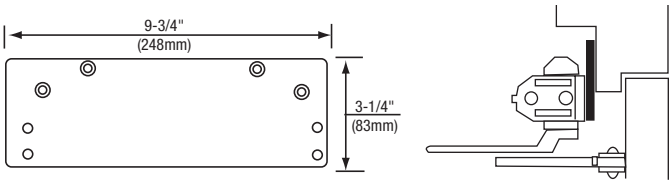

Overhead Door Holder - #1688 Drop Plate: For use where a overhead door holder prevents normal top jamb mounting. This places the center line of the arm mounting screws at 3-1/2" (89mm) from the top of the door.

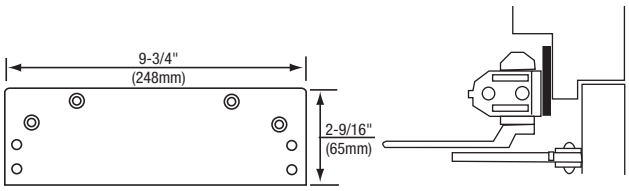

Low Ceiling Clearance - Overhead Door Holder - #1687 Drop Plate: For use where the ceiling clearance is between 1-3/4" and 2-5/8" (44mm and 67mm). Or for use where an overhead door holder prevents normal top jamb mounting. This places the centerline of the arm mounting screws at 2-1/8" (54mm) from the top of door.

Closer Mounting Plate

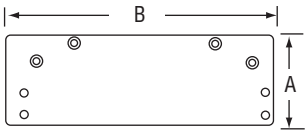

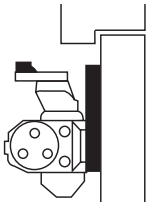

Plate No.	Dimensions	
	A (width)	B (length)
1688	3-1/4"(83mm)	9-3/4"(248mm)
1688C	4-1/8"(105mm)	9-7/8"(251mm)

Note: **#1688C -** To be used when optional cover is specified.

Narrow Top Rail - #1688 Drop Plate: For use where a narrow top rail prevents the closer from being mounted directly to the door surface. This drop plate can be used to mount a closer on a top rail as narrow as 3-1/8" (79mm) in height for 1600BC or 2-1/8" (54mm) for 1680BC.

Brackets for Non-Hold Open Arms

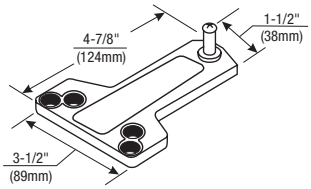

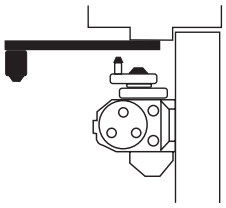

Standard Installation - #1618A Soffit Plate: This soffit plate is supplied standard with parallel arm closers. It can be mounted where the frame soffit is as narrow as 1" (25 mm). **Specify 1618A-SS for stainless steel soffit plate.** With Series P1600SS closers, a 1618A-SS soffit plate fabricated of stainless steel, is supplied standard.

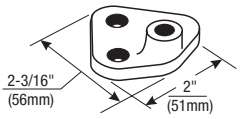

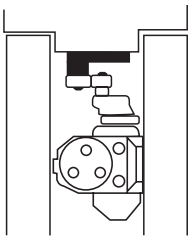

Mounting Between Doors - #2018 Soffit Bracket: For use where insufficient space between companion doors does not permit use of other soffit plates. This bracket permits mounting of the closer between doors with as little as 3" (76mm) of header space. Permits closer arm to clear up to 5/8" (16mm) high stop.

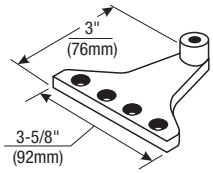

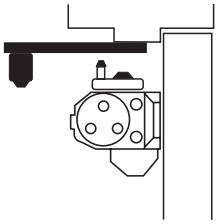

Narrow Frame/Removable Stop - #2018B Soffit Plate: For use where a narrow frame or frame with removable stop does not permit use of the standard soffit plate. This soffit plate may be mounted on the frame soffit or the frame rabbet where the stop does not exceed 5/8" (16mm) in height. All of the screw holes are in a straight line, requiring as little as 1-1/4" (32mm) of frame reveal to mount bracket and maintain good closer arm geometry. Where the frame soffit is as wide as 2" (51mm), this soffit plate may be used to clear weather-stripping that is up to 1-3/8" (35mm) wide and 5/8" (16mm) in height.

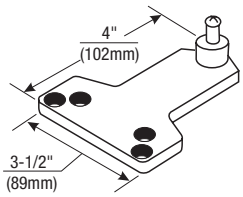

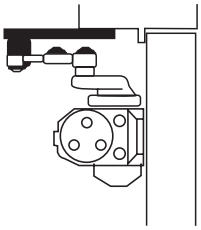

Blade/Applied Stop - #2018D Soffit Plate: For use where a blade or applied stop does not permit installation of the standard soffit plate. Mounts to either the frame soffit or rabbet. Since this soffit plate projects 7/8" (22mm) less than a standard soffit plate, it requires a minimum frame reveal of 1-1/2" (38mm). Permits closer to clear up to a 5/8" (16mm) high frame stop.

PARALLEL ARM

Brackets for Non-Hold Open Arms (continued)

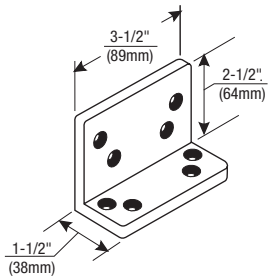

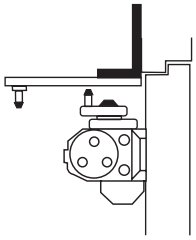

Flush Transom - #2022 Angle Bracket: For use where rabbeted or flush transom conditions prevent installation of a soffit plate. Used in combination with the 1618A soffit plate, or may be used in combination with the 2018S soffit plate when it is necessary for the closer arm to clear a separate overhead door holder.

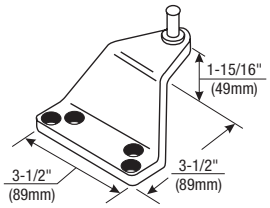

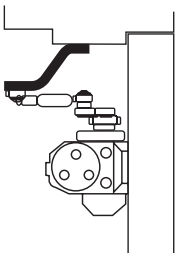

Extra-clearance - #2018S Offset Soffit Plate: For use where the need for additional clearance prevents use of the standard soffit plate. This plate mounts to the frame soffit to provide up to 2" (51mm) of clearance when a separate overhead door holder is used. Standard mounting requires a 2-5/8" (67mm) wide frame soffit. It may also be used where unusually high frame stops or weather-stripping prevent the use of other soffit plates.

Brackets for Hold Open Arms

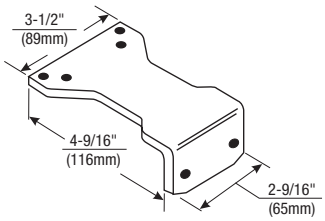

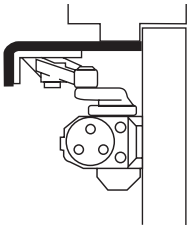

Parallel Hold Open - #1628H Adapter Plate: This Adapter Plate is supplied standard with all parallel arm hold open closers. It can also be used to convert regular arm or top jamb hold open arms to parallel arm installation. It can be mounted where the frame soffit is as narrow as 1" (25mm).

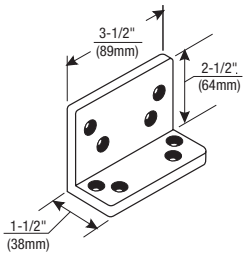

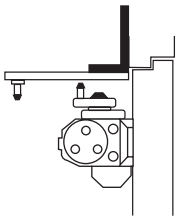

Flush Transom Hold Open - #2022 Angle Bracket: For use where rabbeted or flush transom conditions prevent installation of the standard 1628H hold open adapter plate. It is used in combination with the 1628H adapter plate.

Closer Mounting Plate

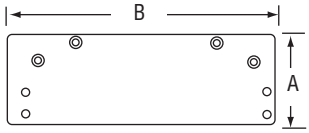

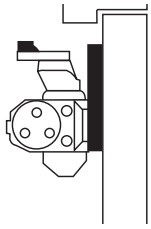

Plate No.	Dimensions	
	A (width)	B (length)
1688	3-1/4"(83mm)	9-3/4"(248mm)
1688C	4-1/8"(105mm)	9-7/8"(251mm)

Note: #1688C - To be used when optional cover is specified.

Narrow Top Rail - #1688 Drop Plate: For use where a narrow top rail prevents the closer from being mounted directly to the door surface. This drop plate can be used to mount a closer on a top rail as narrow as 2-5/8" (67mm) in height.

Brackets for Non-Hold Open Arms & Hold Open Arms

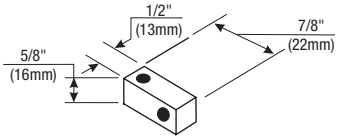

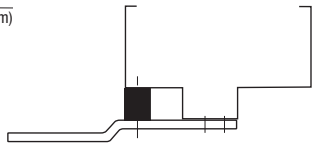

Standard - #2019S Spacer Block: For use where a narrow frame soffit does not provide adequate support for the soffit plate. Supplied as standard with all parallel rigid arm closers. For use on frame with either 1/2"(13mm) or 5/8"(16mm) high frame stop.

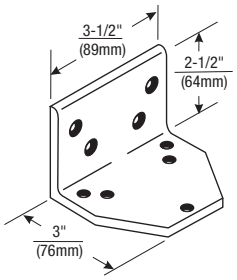

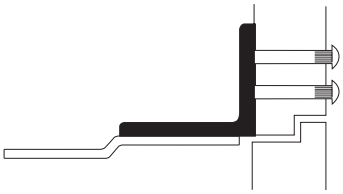

Flush Rabbeted Transom - #2019L Angle Bracket: For use where flush transom conditions prevent mounting of the standard soffit plate. This bracket is used in combination with the arm's soffit plate.

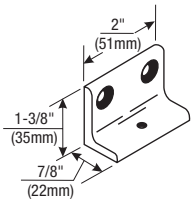

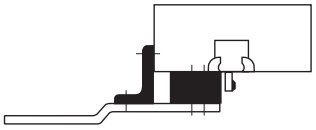

Narrow Frame - #6890 Support Bracket: For use where the frame is narrow, and the soffit plate cannot be mounted directly to the frame soffit or rabbet. Used in combination with the #6891 Spacer Block on blade stop frames to provide extra support and needed clearance of the blade stop. Used on frame where frame stop does exceed 5/8" (16mm) in height.

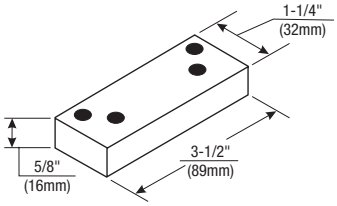

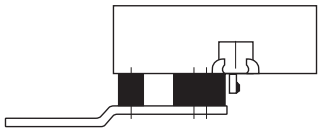

Clearance/Support Blade Stop - #6891 Spacer Block: For use where the door frame has a blade stop and the soffit plate must be mounted on the frame rabbet. This accessory is used in combination with the standard 2019S Spacer Block to provide clearance of the blade stop. For clearance of 5/8"(16mm) high-frame stop.

CLOSERPLUS® ARMS

Closer Mounting Plate

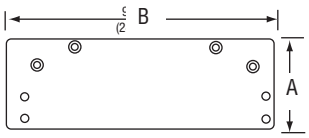

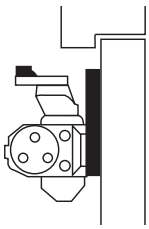

Plate No.	Dimensions	
	A (width)	B (length)
1688	3-1/4"(83mm)	9-3/4"(248mm)
1688C	4-1/8"(105mm)	9-7/8"(251mm)

Note: #1688C - To be used when optional cover is specified.

Narrow Top Rail - #1688 Drop Plate: For use where a narrow top rail prevents the closer from being mounted directly to the door surface. This drop plate can be used to mount a closer on a top rail as narrow as 2-5/8" (67mm) in height.

Brackets for Non-Hold Open Arms & Hold Open Arms

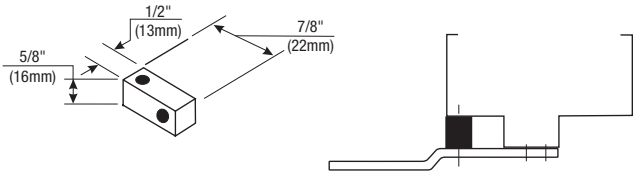

Standard - #2019S Spacer Block: For use where a narrow frame soffit does not provide adequate support for the soffit plate. Supplied as standard with all CloserPlus® arm closers. For use on frame with either 1/2" (13mm) or 5/8" (16mm) high frame stop.

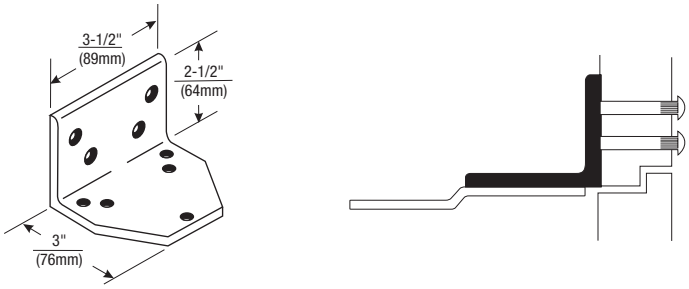

Flush Rabbeted Transom - #2019L Angle Bracket: For use where flush transom conditions prevent mounting of the standard soffit plate. This bracket is used in combination with the arm's soffit plate.

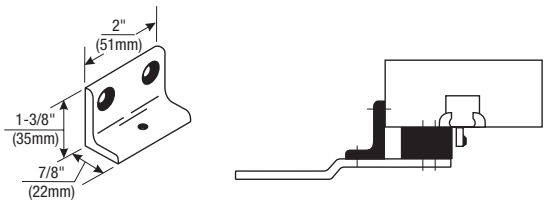

Narrow Frame - #6890 Support Bracket: For use where the frame is narrow, and the soffit plate cannot be mounted directly to the frame soffit or rabbet. Used in combination with the #6891 Spacer Block on blade stop frames to provide extra support and needed clearance of the blade stop. Used on frame where frame stop does exceed 5/8" (16mm) in height.

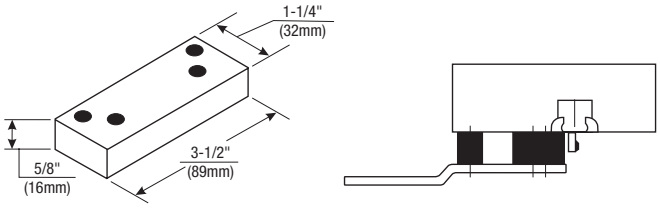

Clearance/Support Blade Stop - #6891 Spacer Block: For use where the door frame has a blade stop and the soffit plate must be mounted on the frame rabbet. This accessory is used in combination with the standard 2019S Spacer Block to provide clearance of the blade stop. For clearance of 5/8"(16mm) high-frame stop.

Closer Mounting Plate (for Parallel Arm)

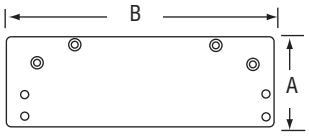

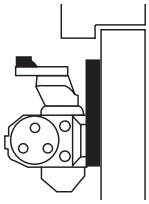

Plate No.	Dimensions	
	A (width)	B (length)
1688	3-1/4"(83mm)	9-3/4"(248mm)
1688C	4-1/8"(105mm)	9-7/8"(251mm)

Note: #1688C - To be used when optional cover is specified.

Narrow Top Rail - #1688 Drop Plate: For use where a narrow top rail prevents the closer from being mounted directly to the door surface. This drop plate can be used to mount a closer on a top rail as narrow as 2-5/8" (67mm) in height.

Soffit Plate Reinforcing Brackets (for Parallel Arm)

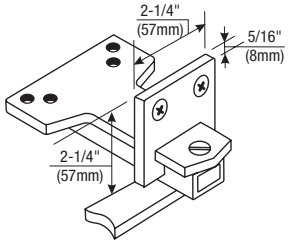

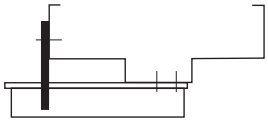

Additional Support - #6190 Reinforcing Bracket: Standard for use with all Parallel Arm *UniTrol* Door Controls. Provides additional support to the soffit plate on installations with door frame reveals from 1-7/8" to 4-5/8" (48mm to 117mm).

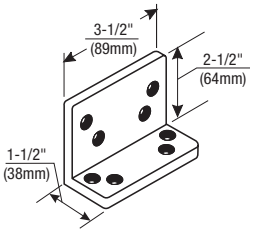

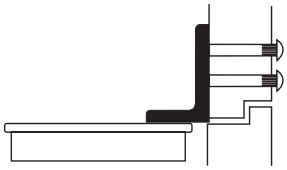

Flush Rabbeted Transom - #2022 Angle Bracket: Optional for use with all Parallel Arm *UniTrol* Door Controls. For use where rabbeted or flush transom conditions prevent installation of the soffit plate assembly. This bracket fastens to the overhead transom to provide a mounting surface for the soffit plate assembly.

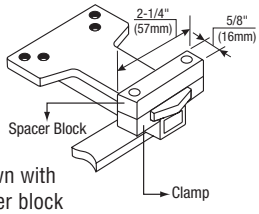

Shown with spacer block and clamps

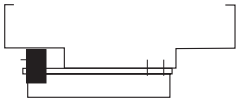

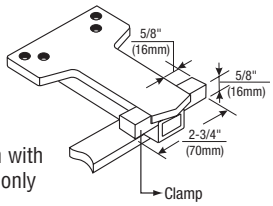

Shown with clamp only

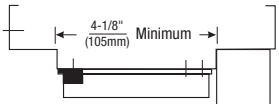

Wide Frame - #6191 Reinforcing Kit: Optional for use with all Parallel Arm *UniTrol* Door Controls. Used to support the soffit plate on installations with deep frames. Clamps may be used with or without the spacer block, depending on frame conditions.

Closer Mounting Plate (for Top Jamb)

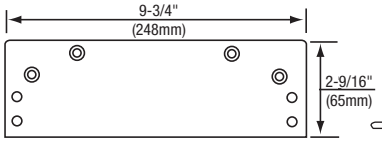

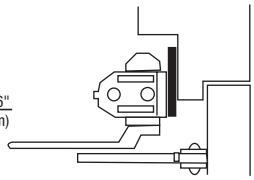

Low Ceiling Clearance - #1687 Drop Plate: For use where the ceiling clearance is between 1-3/4" and 2-5/8" (44mm and 67mm). This places the centerline of the arm mounting screws at 2-5/8" (67mm) from the top of door.

SPECIAL ACCESSORIES

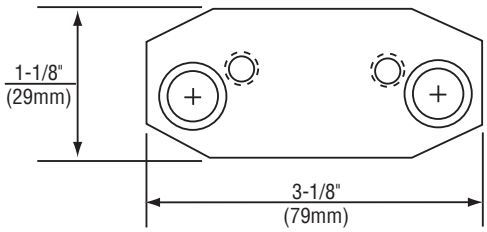

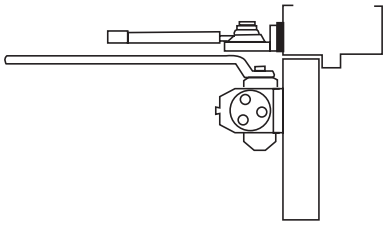

Converting Old Hold Open Installations - #2017 Adapter Plate: For use on old hold open installations with 2-1/2" (64mm) hole spacing on the holder bracket. Plate uses existing holes in either door or frame and accepts the new hold open bracket with 1-3/4" (44mm) hole spacing. For regular arm or top jamb installations.

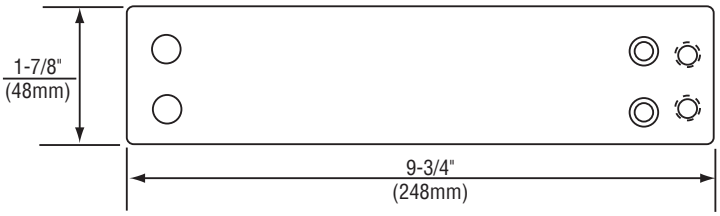

1699 Adapter Plate:
Converts old 1602/1603 closer installations with 3/4" (19mm) x 8-3/16" (208mm) - spacing to new 1602, 1603 or 1601BF using existing mounting holes in door or frame.

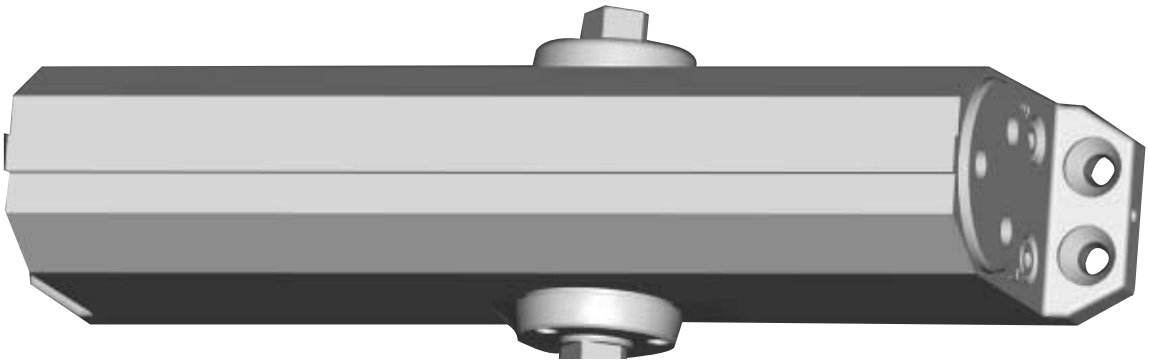

Body Only (Standard)	
160*BCLAP	Sized Closer
1601LAP	Multi-sized
1601BFLAP	Barrier Free
1601DALAP	Delayed Action
1601BFDALAP	Barrier Free Delayed Action
1601SSLAP	Stainless Steel
1601SSDALAP	Stainless Steel Delayed Action

LAP = Less All Parts
* Specify closer size. Pinion cap and mounting screws supplied.

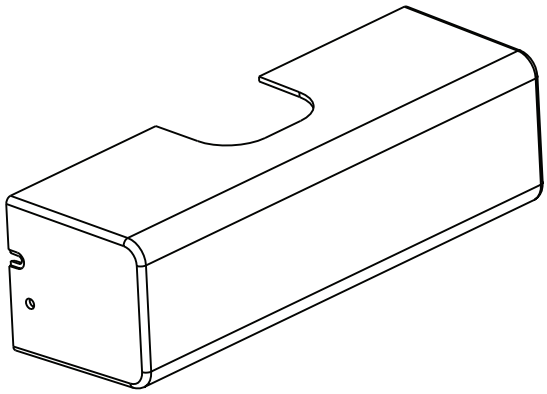

Optional Cover- 1600P

2-7/8"(73mm) height x 3-1/6"(78mm) deep x 9-7/8"(251mm) long
To order with closer use "P" suffix; ie 1604BCP.

Steel Door Application

Sex-nut / Sleeve-nut : "SN" (4 per pack) or
Sex-nut / Sleeve-Nut & Screw: "SNB" (4 per pack)

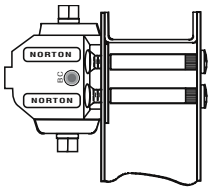

Door	SN's	SNB's
1-3/8"	SN-138	SNB138-38
1-3/4"	SN-134	SNB134-38
2-1/4"	SN-214	SNB214-38
S.S. SNB's 1-3/4"	SN-134SS	SNB134SS-38

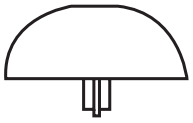

1634 Pinion Cap.

Aluminum and Wooden Door Application
(Aluminum Door Shown)

Thru Bolt & Grommet Nut : "TBGN" (4 per pack)

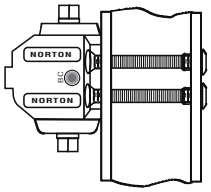

Door	TBGN's
1-3/8"	TBGN138-38
1-3/4"	TBGN134-38
2-1/4"	TBGN214-38

NON-HOLD OPEN ARM ASSEMBLIES

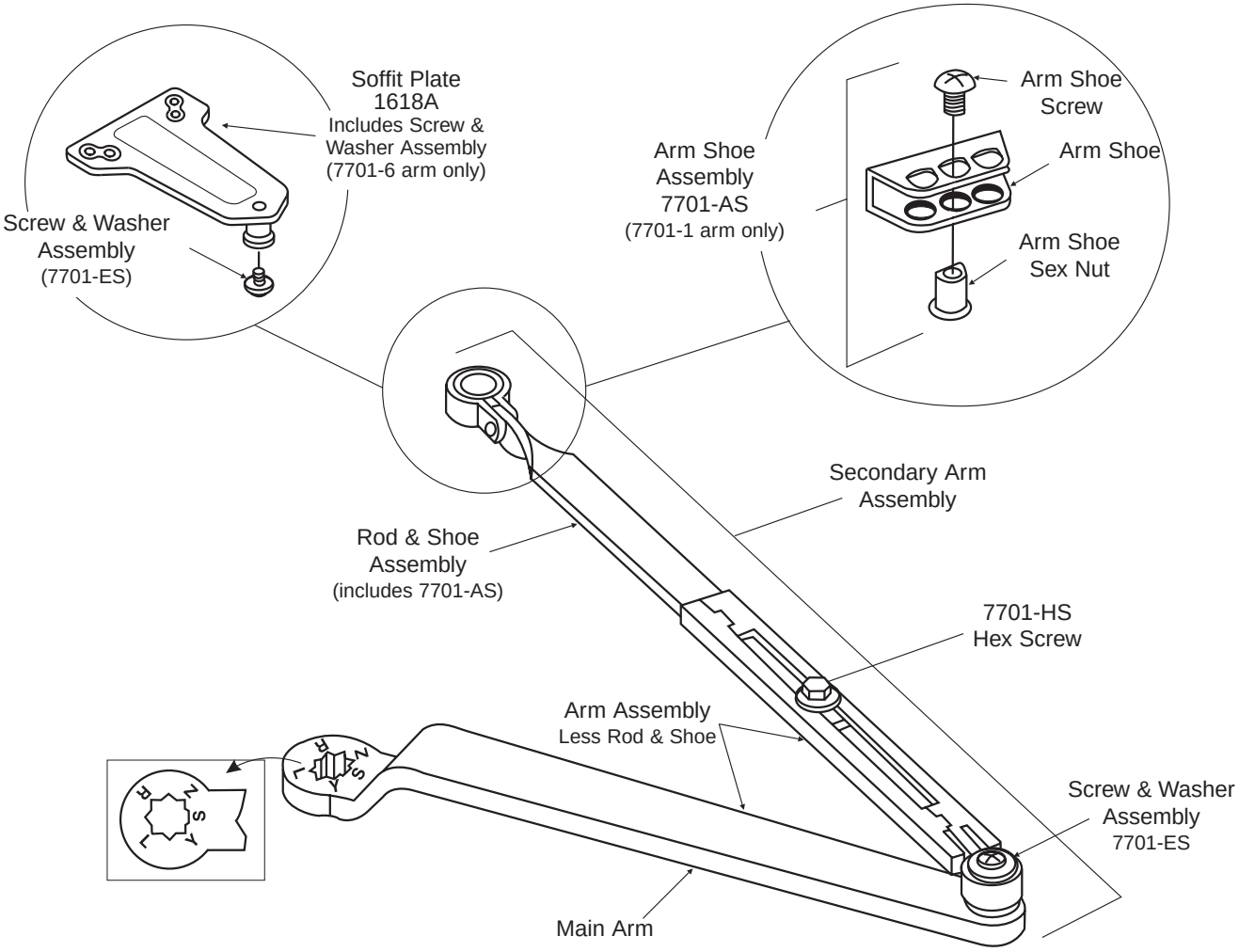

Note: Mounting hardware included with all parts orders

Closer Series	Complete Arm Assembly	Main Arm Assembly Ⓐ (length)(mm) (includes 7701-ES)	Secondary Arm Assembly (includes 7701-ES)	Arm Assembly Less Rod and Shoe	Rod & Shoe Ⓑ Assembly (length)(mm)
1600BC/1601	7701-1	7701-1M (11)(279)	7701-111	7701-1W	7701-11 (8-7/8)(225)
J1600BC/J1601	7701-1A		7701-121		7701-11A (12-9/16)(319)
P1600BC/P1601	7701-6		7701-116		7701-16 (8-7/8)(225)
P1600BC/P1601Ⓒ	7701-6A		7701-116A		7701-16A (12-9/16)(319)
1601	7701-26 (Tri pack includes 7701-1 plus 1618A plate)				

Ⓐ C to C length shown in parentheses.
Ⓑ C of connecting link to end of rod shown in parentheses.
Ⓒ For 180° door swing when using a special template for doors hung on 6" to 8"(162mm to 203mm) wide throw hinges.

Norton®

STAINLESS STEEL ARM ASSEMBLIES

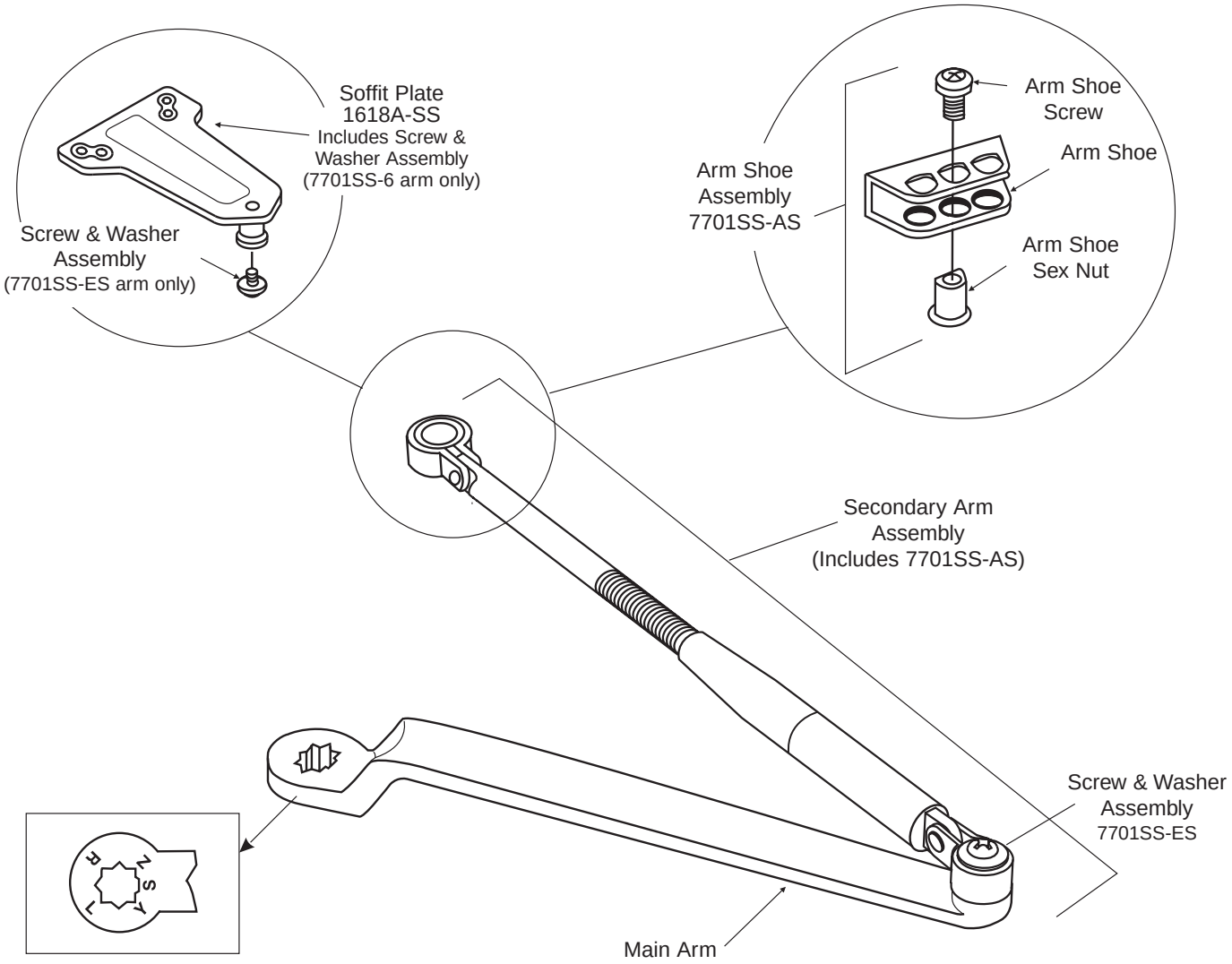

Note: Mounting hardware included with all parts orders

Closer Series	Complete Arm Assembly	Main Arm Assembly Ⓐ (length)(mm) (includes 7701S-ES)	Secondary Arm Assembly (includes 7701S-ES)
1601SS	7701SS-1	7701SS-1M (11) (279)	7701SS-111
J1601SS	7701SS-1A		7701SS-121
P1601SS	7701SS-6		7701SS-116

Ⓐ C to C length shown in parentheses

HOLD OPEN ARM ASSEMBLIES

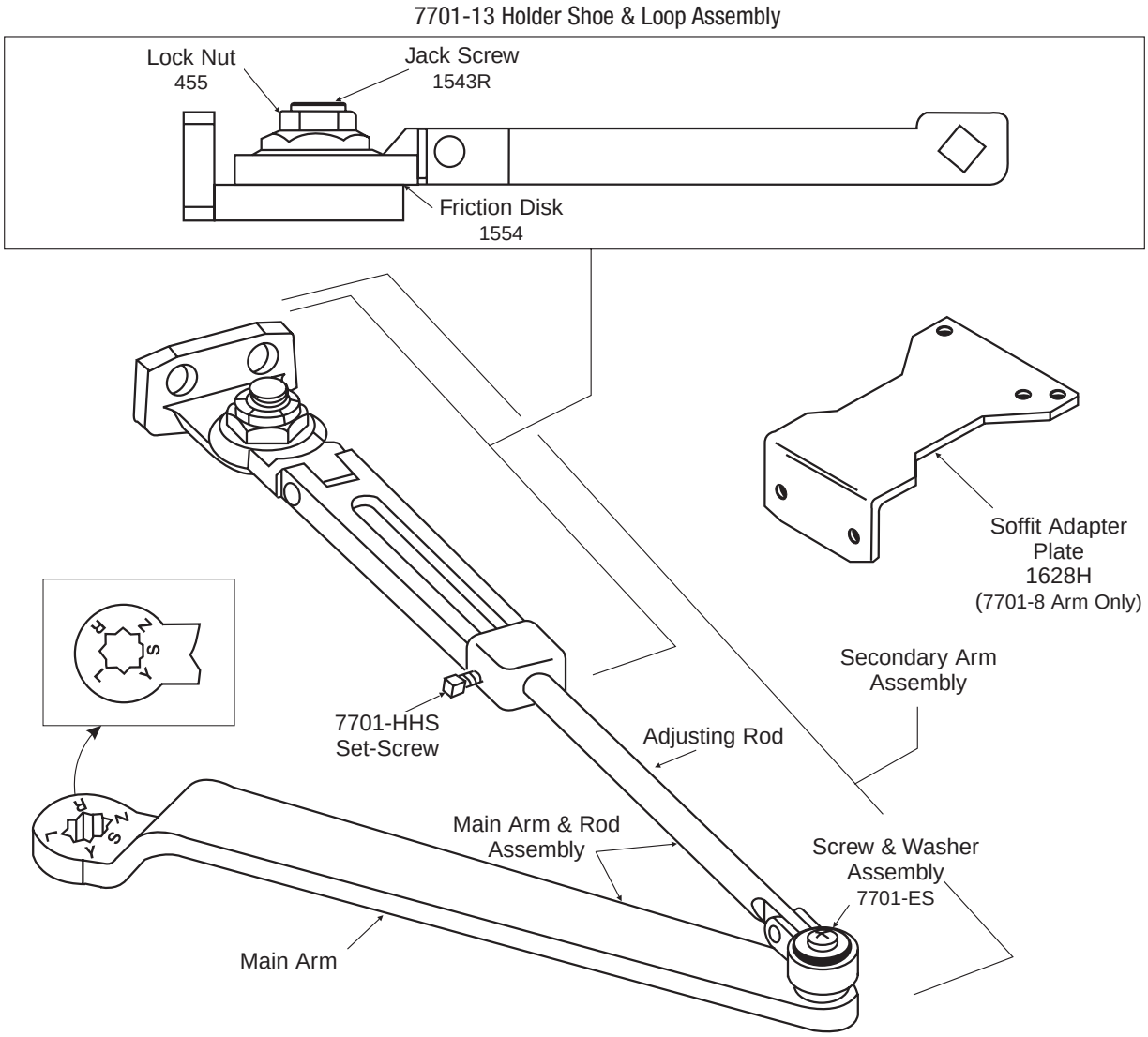

Note: Mounting hardware included with all parts orders

Closer Series Assembly	Complete Arm Assembly	Main Arm Ⓐ (Length)(mm) (includes 7701-ES)	Secondary Arm (includes 7701-ES)	Main Arm & Rod Assembly	Holder Shoe & Loop Assembly	Adjusting Arm Ⓑ (Length)(mm)
1600BCH/1601H	7701-3/7701-8 Ⓒ	7701-1M (11) (279)	7701-113/7700-118 (Reg.) / (Par.)	7701-3W	7701-13	7701-31 7.3/8"(187)
J1600H/J1601H	7701-3A		7701-123	7701-3WA		7701-31A 10-13/16"(275)

7701-18= Holder Shoe & Loop Assembly (7701-13) with soffit adapter plate (1628H)

Ⓐ C to C length shown in parentheses.
Ⓑ C of connecting link to end of rod shown in parentheses.
Ⓒ Same as 7701-3 but includes #1628H soffit adapter plate.

Non-Hold Open Arm Shown

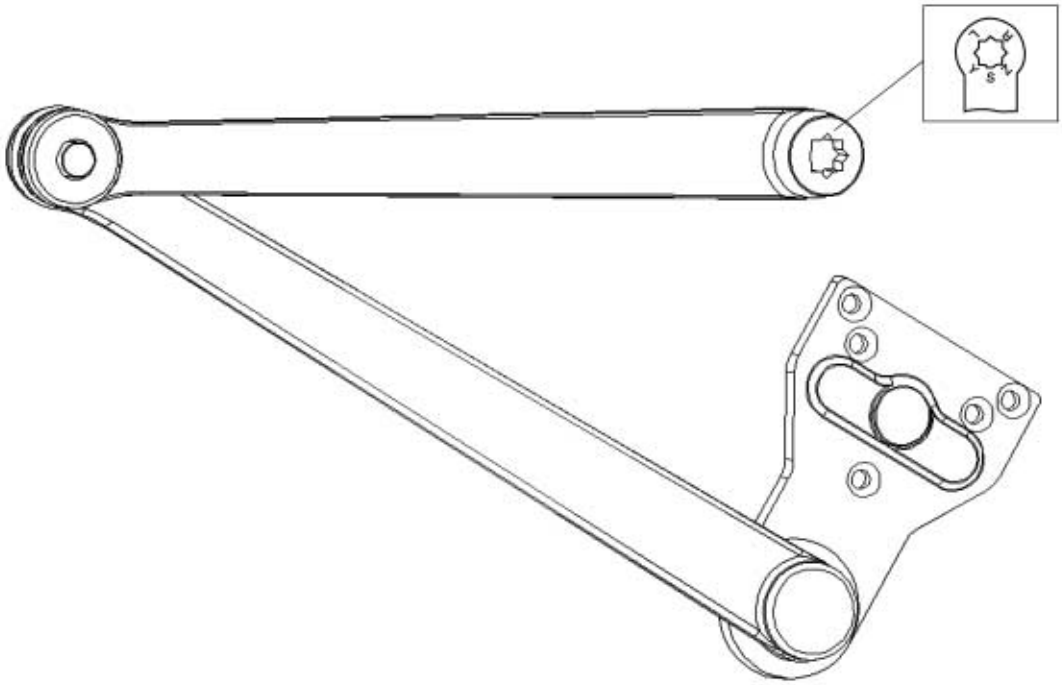

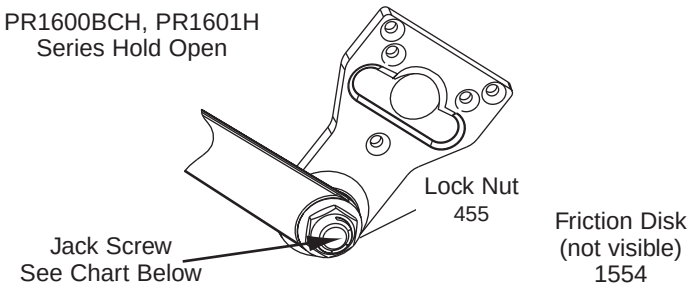

Note: Mounting hardware included with all parts orders

Closer Series PR1600BC/PR1601	Complete Arm Assembly	Jack Screw
Non-Hold Open	PR7701-5	N/A
Hold Open	PR7701-8R	1543R
	PR7701-8L	1543L

CLOSERPLUS® ARM ASSEMBLIES

Hold Open arm shown (CLP-T)

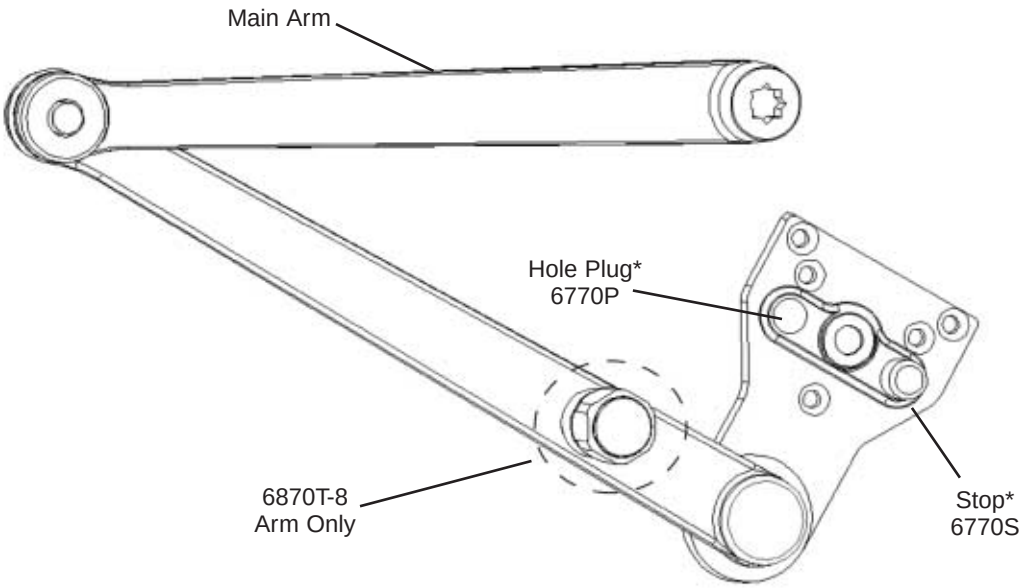

Note:
Mounting hardware included with all parts orders

Closer Series	Arm Function	Complete Arm Package
CLP1600BC/ CLP1601	Non-Hold Open	6770-5
CLP1600BCT/ CLP1601T	Thumbturn Hold Open	6870T-8

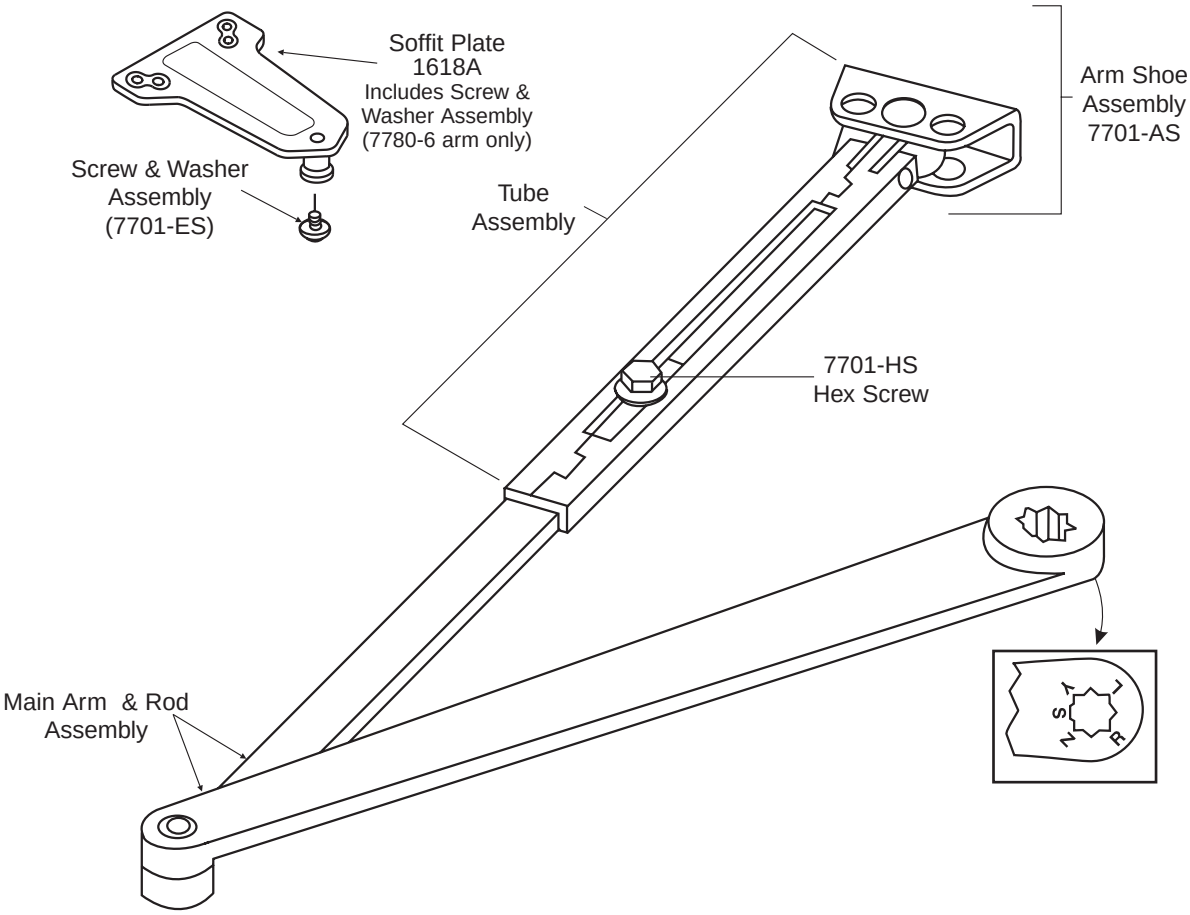

Note:
Mounting hardware included with all parts orders

Arm Application	Complete Arm Assembly	Main Arm & Adjusting Rod Assembly	Tube & Shoe/Soffit Assembly
Regular Arm	7780-1	7780-1MR	7780-1TS (with 7701-AS)
Parallel Arm	7780-6		7780-6TS (with 1618A)
Tri-pack	7780-26		

UNITROL® ARM ASSEMBLIES

Parallel arm hold open & non-hold open series

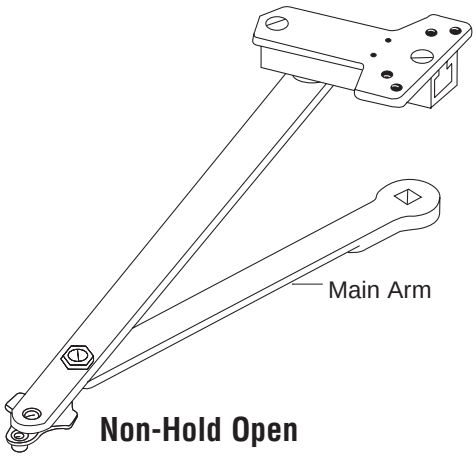

Non-Hold Open

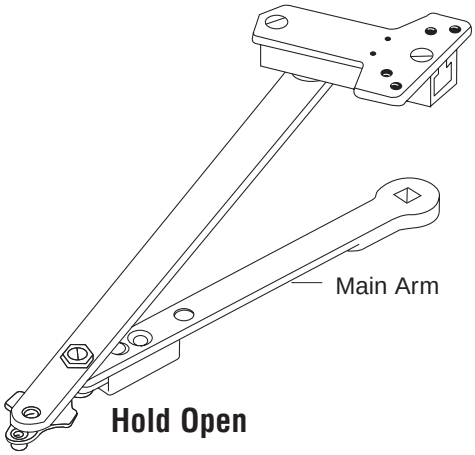

Hold Open

Door Width (cm)	Main Arm Length* (mm)	Complete arm assembly	
		Non-Hold Open	Hold Open
28" - 32" (71- 81)	9-1/2" (241)	6100-11	6100-1
33"- 41" (84 - 104)	11" (279)	6100-13	6100-3
42" - 48" (107 - 122)	12-1/2" (318)	6100-14	6100-4

* Center to center length.

Note:
Mounting hardware included with all parts orders

Top jamb hold open & non-hold open series

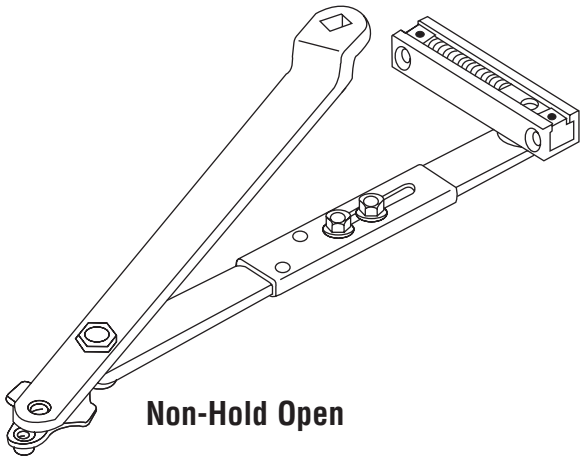

Non-Hold Open

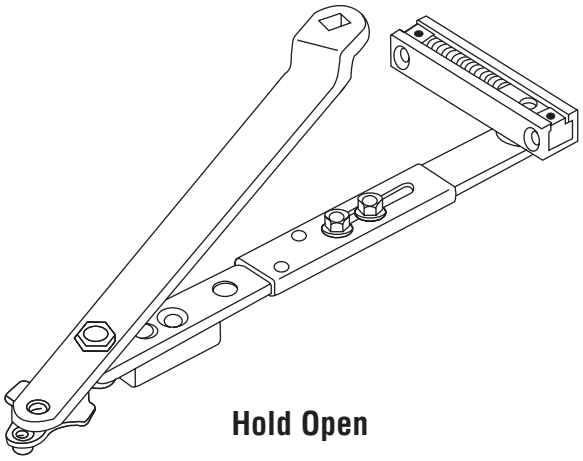

Hold Open

Complete arm assembly		For Frame Reveals (mm)
Non-Hold Open	Hold Open	
J6100-4	J6100-7	2-1/8" - 3-1/4" (54 - 83)
J6200-4	J6200-7	1/2" - 2" (13 - 51)
J6400-4	J6400-7	3-3/8" - 4-1/4" (86 - 108)
J6500-41	J6500-71	4-3/8" - 5-3/8" (111 - 137)
J6500-42	J6500-72	5-1/2" - 6-3/8" (140 - 162)
J6500-43	J6500-73	6-1/2" - 7-3/8" (165 - 187)
J6600-4	J6600-7	0 - 3/8" (0 - 10)

NOTES

NOTES

Norton®

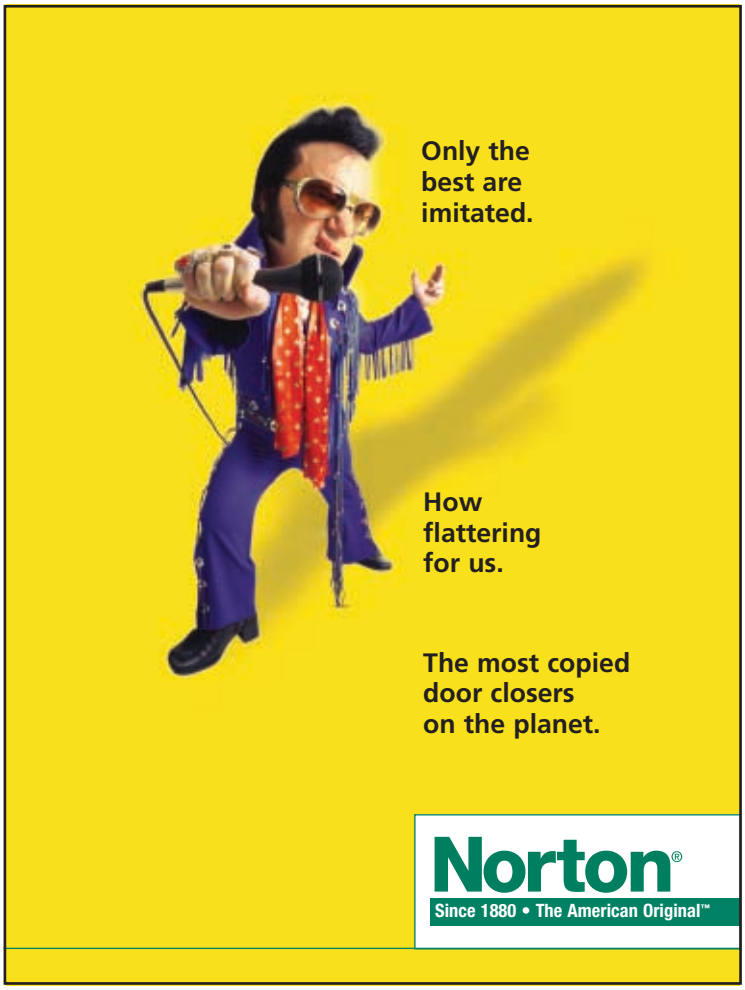

Norton Door Controls
1902 Airport Road
Monroe, NC 28110
Telephone: 1.800.438.1951
Fax: 1.800.338.0965

Yale-Corbin Canada Ltd
6940 Edwards Boulevard
Mississauga, Ontario, Canada L5T 2W2
Telephone: 1.800.461.3007
Fax: 1.800.461.8989

For a complete listing of products and applications please visit our web site.

www.nortondoorcontrols.com
www.yalecorbin.on.ca

Norton® PowerMatic® Unitrol®, CloserPlus®, Power Track®, NorGlide™ and Yale Security Inc.® are registered trademarks of Yale Security Inc. These materials are protected under U.S. copyright laws. All contents current at time of publication. Yale Security Inc. reserves the right to change availability of any item in this catalog, its design, construction, and/or its materials. Other products' brand names may be trademarks or registered trademarks of their respective owners and are mentioned for reference purposes only.

Copyright 2002, 2003 Yale Security Inc. All rights reserved.

The ASSA ABLOY Group is the world's leading manufacturer and supplier of locking solutions dedicated to satisfying end-user needs for security, safety and convenience.