Norton®

Yale Security Inc.

SERIES 4900
OVERHEAD CONCEALED CLOSER

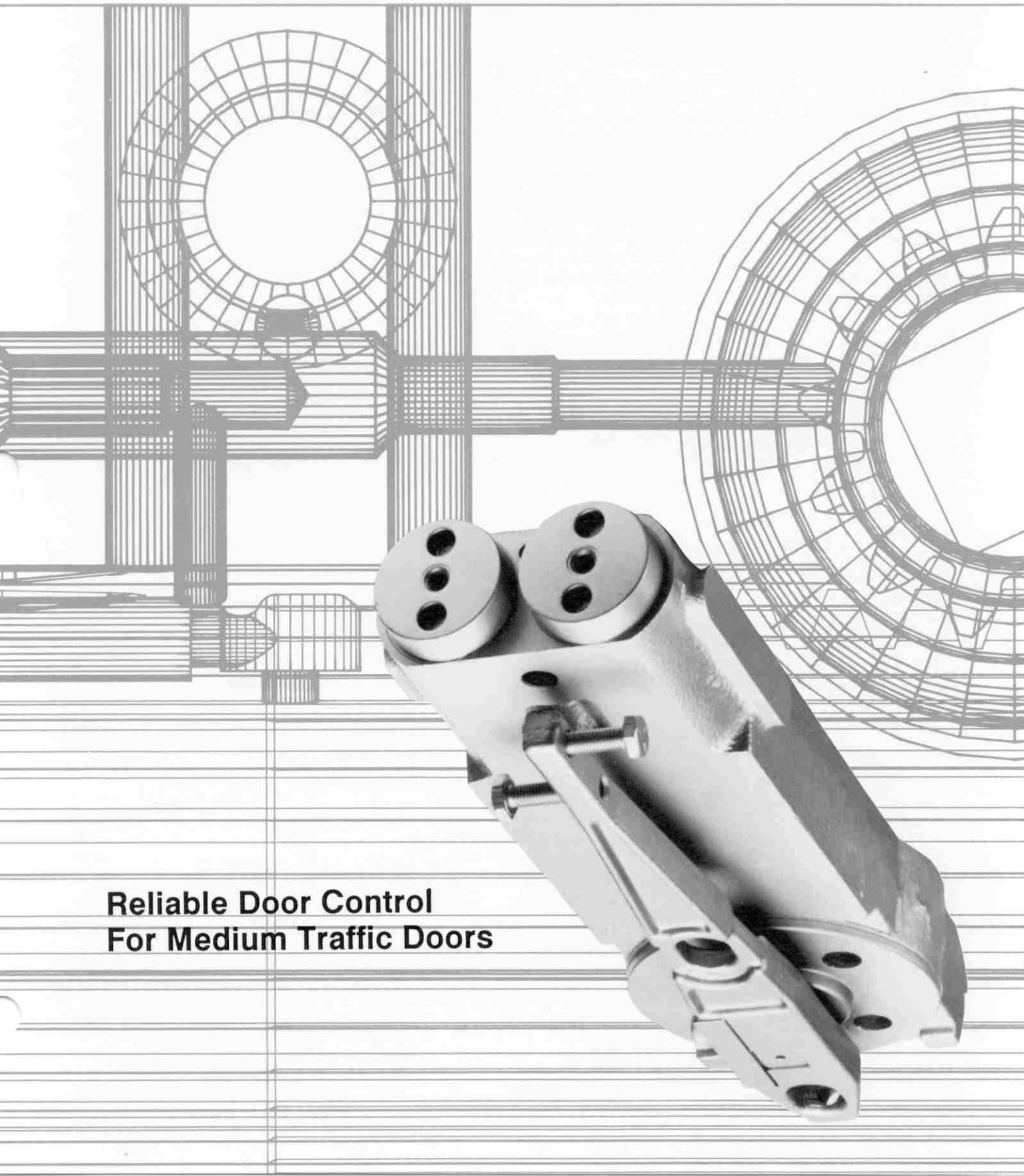

Reliable Door Control
For Medium Traffic Doors

Norton®

Yale Security Inc.

GENERAL INFORMATION

The Series 4900 Overhead Concealed Closer provides hidden door control for both exterior and interior doors. The 4900 provides control for medium traffic doors weighing up to 200 pounds. Ideal for aluminum doors and frames, its compact design will fit a 1-3/4″ x 4″ frame. Arm configurations, end load, side load and offset are available to suit most any application or door and frame construction. The fully adjustable, double acting closer is available for center or offset hung doors. A frame stop is required for any single acting application.

The Series 4900 is certified and meets the ANSI 156.4 requirements for a Grade 2, overhead concealed door closer. The closer is covered by Norton's limited 5 year warranty to be free from defects in workmanship and materials under normal use and service.

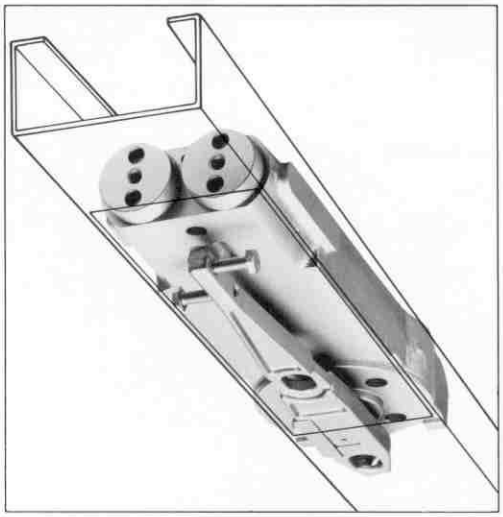

How to Order: Use the following outline to select the correct catalog number you require.

49	—	4	—	—	x Finish	x Optional Spindle Extensions
First & Second Digits - defines the 4900 Series closer	**Third Digits** - defines type of arm and degree of opening 0- End Load 90° 1- End Load 105° 4- Side Load 90° - Only for Aluminum doors and frames 5- Side Load 105° - Only for Aluminum doors and frames 6- Offset Arm 90° 7- Offset Arm 105°	**Fourth Digits** defines closer size. Size 4 Only	**Options suffix** - defines stop or hold open option No suffix- dead stop only at degree of opening specified H - Automatic hold-open & positive stop at degree of opening specified	**Door/Frame material suffix** No suffix - Aluminum HM - Hollow Metal WD - Wood	Specify Finish of Cover Plate Order by Norton symbol Arm will be painted to match (See Finishes)	1/2" 5/8" 3/4" 1" 1-1/4" 1-1/2" 1-3/4" 2"

Spindle Extensions

Spindle extensions are available in lengths from 1/2″ to 2″ increments to lengthen the spindle to meet different frame requirements. The spindle extension fits over the closer spindle and attaches with an allen keyed screw. To use a spindle extension the closer must be factory modified to accept the spindle extension.

Finishes

The 4900 concealed closer cover plates are available in both painted and plated finishes. If the arm is exposed it will be painted to either match or complement the painted or plated cover plate.

To order, specify the finish of the cover plate. The arm will be painted to either match or complement finish specified.

Arm Type	Door and Frame Material	Arm Finishes	Cover Plate Finishes
End Load	AL	Not Required	Not Applicable
	WD	Not Required	All
	HM	Not Required	All
Offset	AL	Painted	Painted
	WD	Painted	All
	HM	Painted	All
Side Load	AL	Not Required	Not Applicable

Finish Description	Norton Symbol	BHMA Code	
Painted Finishes			
Aluminum	AL	689	Available on Arms and Cover Plates
Dull Bronze	DB	691	
Dark Statuary Bronze	STAT	690	
Black	315	693	
Plated Finishes			
Bright Brass	US3	632	Available on Cover Plates Only
Satin Brass	US4	633	
Bright Bronze	US9	637	
Satin Bronze	US10	639	
Oxidized Satin Bronze Oil Rubbed	US10B	640	
Bright Chrome	US26	651	
Satin Chrome	US26D	652	

Norton®

Yale Security Inc.

FEATURES AND APPLICATIONS

Features

- Double acting.
- Single acting - frame stop required.
- Concealed mounting.
- Cast iron body.
- Steel piston and pinion.
- Ball bearing pivots - 3/16″ vertical adjustment.
- Single valve control of closing speed.
- Center hung or offset hung.
- Non-hold open - Positive stop at 90° or 105°.
- Automatic hold-open - Positive stop and hold-open at 90° or 105°.

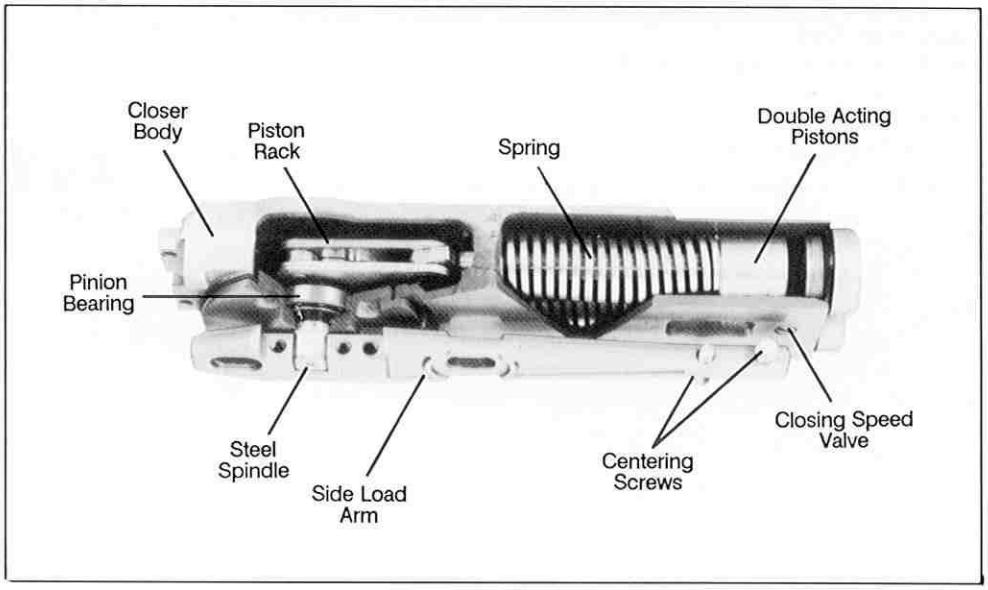

Applications

- For aluminum, hollow metal and wood doors and frames.
- Fits in 1-3/4″ x 4″ frame.
- For medium traffic doors up to 200 lbs.
- Exterior doors up to 3′-6″ x 8′-0″ x 1-3/4″ (min.).
- Interior doors up to 3′-8″ x 8′-0″ x 1-3/4″ (min.).
- Steel spindles - 1/2″ high standard, extensions available from 1/2″ to 2″ as an option.
- Bottom pivot standard. Intermediate pivot available as an option.
- End load, side load and offset arms available to suit conditions.
- Mounting channel of corrosion resistant steel furnished standard for hollow metal or wood frames.
- Cover Plate - standard for wood and hollow metal applications. Available in either painted or plated finishes.
- Cover plate not furnished on aluminum applications. Can be special ordered 4900CP x finish.

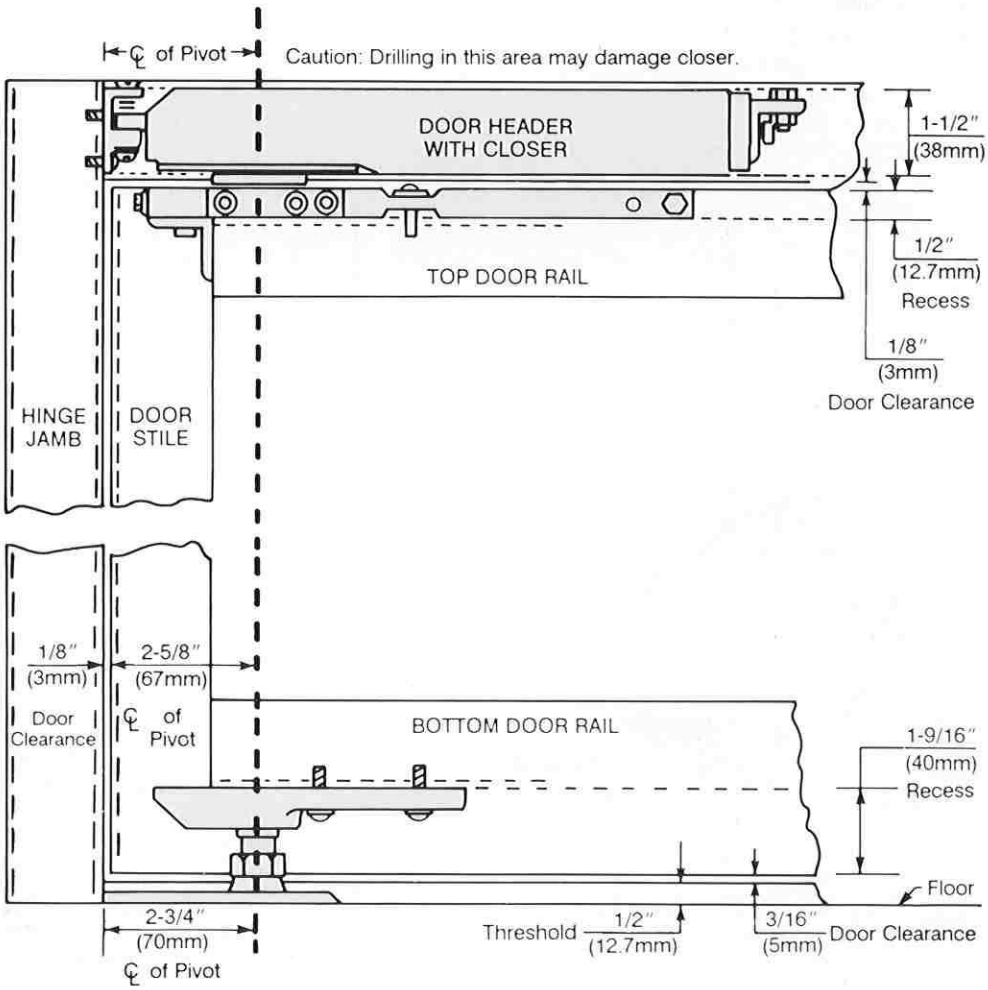

Norton®

Yale Security Inc.

ARM & PIVOT OPTIONS

End Load Arm
- Center hung – Double acting.
- Single acting – Frame stop required.
- Non-handed.
- Door must be open for access to screws.
- Available for aluminum, hollow metal and wood doors.

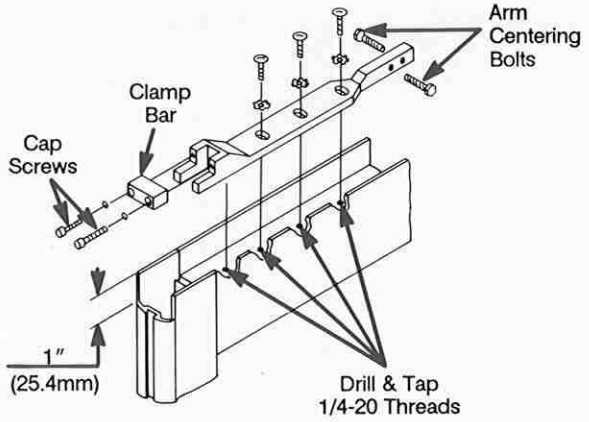

Side Load Arm
- Center hung – Double acting.
- Single acting – Frame stop required.
- Screws accessible when door is open.
- Non-handed (mount screws to inside).
- Aluminum doors and frames only.

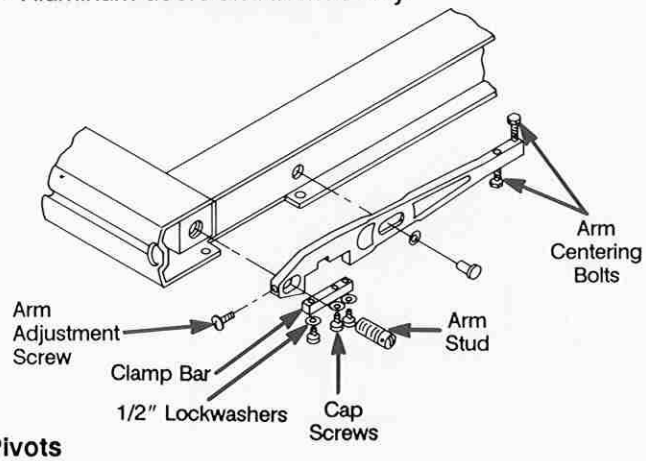

Offset Arm
- Single acting – Frame stop required.
- Hung on hinges or pivots (not included).
- Handed when installed.
- Steel channel.
- Available for aluminum, hollow metal and wood doors.

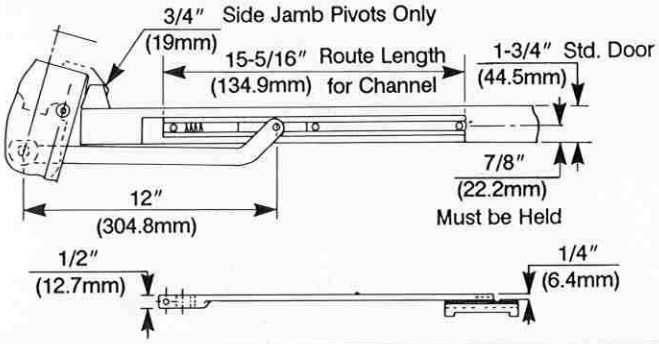

Pivots
- Ball bearing spindle.
- 3/16″ vertical adjustment.
- Mounted on floor or threshold.

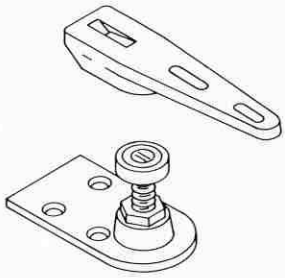

#490
Pivot for Aluminum Doors

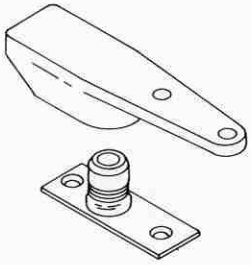

#491
Pivot for Hollow Metal or Wood Doors

Optional Intermediate Pivots

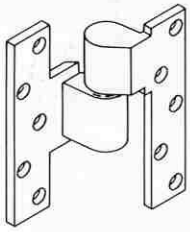

FM492
Full Mortise (Illustrated)

- Available in bronze or aluminum in all architectural or sprayed finishes.
- Can be used with offset arms only.
- Handed.
- 3/4″ Offset.
- Door must be beveled 1/8″ in 2″.

Intermediate pivots are used to maintain door alignment. They are available in mortise and surface mounted versions.

Description	Part Number	Ordering Information
Full Mortise	FM492	x Hand x Finish
Half Mortise	HM493	
Half Surface	HS494	
Full Surface	FS495	

For more information contact your Norton Representative or Norton Door Controls, A Division of Yale Security Inc., 1902 Airport Road, Monroe, NC 28110. Telephone: (800) 438-1951. Fax: (800) 338-0965. In North Carolina: (704) 283-2101. Fax (704) 289-2875. In Canada, 3160 Orlando Drive, Mississauga, Ontario, Canada L4V 1R5. Telephone: (905) 672-6220. Fax: (905) 672-9022. WATS: (800) 461-3007.

These materials are protected under US copyright laws. All contents current at time of publication. Yale Security Inc. reserves the right to change availability of any item in this catalog, its design, construction, and/or its materials.

Yale,® Yale Security Products,® Yale Security Inc.®, are registered trademarks.

#43057-C-5.0-11/99U