Norton®

Since 1880 • The American Original™

7500 7700 Series Institutional Door Closers

An ASSA ABLOY Group company

ASSA ABLOY

OVERVIEW

Standard Features

- ANSI A156.4, Grade 1
- 10-year limited warranty
- Non-handed
- Rack-and-pinion design
- Cast aluminum body
- 2-1/8" (54mm) projection
- 1-1/2" (38mm) diameter piston
- 5/8" (16mm) diameter pinion journals
- Staked valves
- Standard, separate and independent, latch, sweep and backcheck intensity valves
- Backcheck positioning valve
- NorGlide® Fluid
- Molded plastic cover
- All standard arm applications allow doors to swing 180°, conditions permitting
- Self-drilling screws
- Full-size templates

Optional Features	7500	7700
Adjustable spring sizes 1 through 6	X	
Sized springs 2,3,4,5,6 with 50% power adjustment		X
Tri-Style® packaging; tri-packed for regular, top jamb or parallel arm mounting	X	
Bi-packed for regular or top jamb mounting		X
Corrosion-resistant model	X	
Metal cover	X	X
Enhanced backcheck	X	X
Delayed action with pressure relief valve	X	X
Available with PR, PRO, CLP, CPS, Uni, ST and STP arm and track options	X	X
Metal templates	X	X
Retrofit plates	X	X

Table of Contents

Overview 2-3
How to Order 4
Fasteners/Finishes 5
Features 6
Optional Features 6-7
Special Function Door Closers 8
Suggested Specifications 8
Applications 9-12
Technical Details 13-26
Accessories 27-35
Parts List 36-49

Exploded View of Closer Body (without delayed action)

Optional Delayed Action Valving

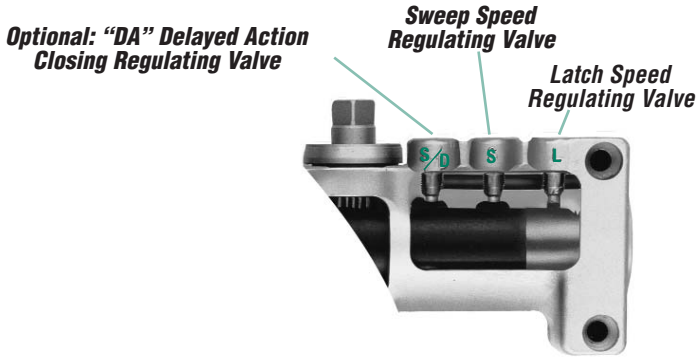

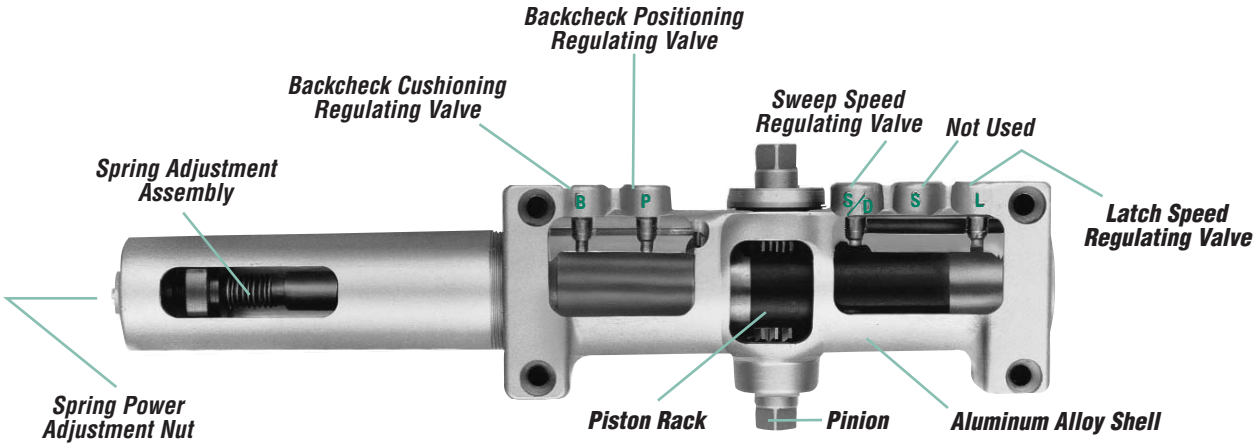

Compliance Standards

The series 7500 door closers are designed to comply with requirements of the Americans with Disabilities Act (A.D.A.) and ANSI standard A117.1. All series 7500/7700 comply with ANSI A156.4 Grade 1 Specification. All *Norton* series 7500/7700 closers with non-hold open arms are listed by Underwriters' Laboratories for labeled fire doors. This includes compliance to UL10C and UBC-72 (1997) for 3-hour assemblies. The product is manufactured in an ISO 9001 facility. These closers are also listed by the New York City Materials and Equipment Acceptance Division.

HOW TO ORDER

For optimum protection of door and frame assemblies, always use auxiliary wall, floor, or overhead door stop.

No Prefix } 7700 series designates bi-packed (regular & top jamb). (Top jamb up to 3" reveal. For frame face less than 3", order 7786 backplate.)
7500 series designates Tri-Style® packaging (tri-packed).

- **J** - Top jamb installation. Supplied with 7786 backplate 2-3/4" - 7" reveal , 150° swing.
- **JL** - Top jamb Installation. Supplied with 7786 back plate 2-3/4" - 7" reveal,180° swing.
- **P** - 7700 parallel arm only.
  - 7500 parallel arm units with specialty brackets.
  - 7580 low-profile closer.
  - 7500SS corrosion-resistant closer.
- **PR** - Parallel rigid arm (parallel arm only) specify hand for hold open functions.
- **PRO** - Parallel rigid arm with offset soffit plate (parallel arm only). Specify hand for hold open applications.
- **PS** - 7500ST / 7540ST / 7700ST / 7740ST for push side mounting only.
- **R** - Rigid heavy-duty regular arm. (Torx® screws not included) (N/A in stainless steel)
- **CLP** - CloserPlus® arm (parallel arm only).
- **CPS** - CloserPlus Spring™ arm (parallel arm only).
- **UNI** - Unitrol® arm (parallel arm only - specify **door width**).
  Frame reveals 1-7/8" to 4-5/8" (48mm-117mm) standard.
- **UNIJ** - Unitrol® arm (top jamb only - specify **frame reveal**). 7-3/8" (187mm) maximum.

J L	7 5	0	0	H
PREFIXES	**FIRST & SECOND DIGIT** Defines closer series	**THIRD DIGIT** Specifies some options	**FORTH DIGIT** Closer power sizing	**SUFFIXES**

77 Specifies 7700 sized closer.
75 Specifies 7500 multi-sized closer.

- **0** - Specifies standard arm.
- **3** - Indicates top jamb with metal cover for frame reveal 0 to 3". 7786 back plate included.
- **4** - Specifies shallow 11/16" (17mm) depth slide track for closer with "ST" suffix.
- **7** - Specifies closer having a security arm, security cover and Torx® security screws (specify hand).
- **8** - Specifies low-profile arm (use prefix "P" parallel arm or "J" for top jamb). Non-hold open only.

Note:
- Door closer warranty becomes void if it is installed on the exterior side of a door in the exterior wall of a building
- It is strongly recommended, and it is required on fire door assemblies, that doors having a door closer be hung on ball-bearing or anti-friction hinges or pivots
- Failure to use the correct type and size fasteners may void factory warranty
- Fasteners for fire/smoke door assemblies must conform to NFPA 80. In some applications additional fasteners may be mandated by NFPA 80 that are not shipped with Norton's standard product, such as sleeve-units/sex-nuts or through-bolts and grommet nuts

Sizing charts provided on pages 13-25 are based on 1-3/4" (44mm) x 7'0" (2.13m) standard weight doors swinging to 110°. Other conditions (such as door height or weight, or wind/draft conditions) may require a larger size closer.

0 - Series 7500 power range 1 through 6

Series 7700
- **"2"** - ANSI size 2
- **"3"** - ANSI size 3
- **"4"** - ANSI size 4
- **"5"** - ANSI size 5
- **"6"** - ANSI size 6

- **None** - Non hold open arm function
- **H** - Hold open arm function (specify hand when "PR" prefix is ordered)
- **M** - Metal cover (cover is handed for top jamb applications)
- **DA** - Optional delayed action feature
- **EBC** - Optional enhanced backcheck
- **HOSP** - 7703 or 7704 only. Hospital hold open (specify hand)
- **COUP** - 7702 or 7703 only. Coupon both hold open (specify hand)
- **TEL** - 7702 only - Telephone booth function (non-handed)
- **ST** - Slide track - single lever arm (auxiliary stop recommended)
- **ST-180** - Slide track - single lever arm, pull side track without buffer assembly for maximum door swing (auxiliary stop required)
- **ST-DE** - Slide track - pull side double egress
- **SS** - Series 7500 only. Corrosion-resistant closer. Available with non-hold open adjustable arm only; for regular arm, top jamb "J" prefix or parallel arm "P" prefix
- **STP** - 7706 and 7706EP door closers only, slide track for pocket door application
- **EP** - Extra power door closer (for 7706 closer only)
- **T** - Thumbturn hold open on CloserPlus® (CLP) or CloserPlus Spring™ (CPS) arm

Fasteners

All closers, with standard non-hold open and hold open arms are shipped with self-drilling, self-tapping and machine screws. Sleeve nuts (SN) may be ordered as an option.

- PR, CLP, CPS, UNI arms and slide tracks are shipped standard with sleeve nuts (SN) and self-drilling screws.
- Sleeve nuts (SN) are available for all closers and should be used on steel doors to prevent dimpling, or where proper door reinforcement has not been provided.
- Standard sleeve nuts are for 1-3/4" (44mm) doors. 1-3/8" (35mm) or 2-1/4" (57mm) door thicknesses are available and must be specified.
- Through-bolts and grommet nuts (TBGN) are another fastener alternative for wood doors. Specify door thickness 1-3/4" (44mm) or 1-3/8" (35mm) when ordering.
- Lobular Torx® drive screws, for tamper resistance, standard with 7570 and 7770 closers. Available as a special order for all other series closers.

Finishes

Product will be painted with a combination of waterborne acrylic and polyester powder coat. Closers will withstand 120 hours of salt spray. ANSI requires 25 hours.

Sprayed Finishes

Description	Specify Norton (BHMA) Designation	Complements the following finishes	Old Norton Designation
Aluminum	689	628, 625, 629, 630, 651, 652	AL
Statuary Bronze	690	640, 613	STAT
Dull Bronze	691	612, 637, 639	DB
Black	693	315	315
Medium Amber	694	312	312
Gold	696	605, 606, 632, 633	GB
Prime Coat (Beige)*	600	—	SRI

* Available at extra cost. Closers can be ordered prime coated only, i.e. (SRI) or prime coated with finish, i.e. SRI x 690.

Plated Finishes

		Cover		
		Metal	Plastic	
Bright Brass	605E	Yes	Yes	US3
Satin Brass	606E	Yes	No	US4
Bright Bronze	611E	Yes	No	US9
Satin Bronze	612E	Yes	No	US10
Oxidized Oil Rubbed Bronze	613E	Yes	No	US10B
Bright Chrome	625E	Yes	Yes	US26
Satin Chrome	626E	Yes	No	US26D

Finishes other than those listed above may be available on special order. A sample will be required.

When a plated finish is ordered, arm and cover will be plated unless "cover only" is specified.

FEATURES

Aluminum Alloy Housing
Closer bodies are constructed of a special aluminum alloy, carefully selected to accommodate interactive steel components and operating conditions.

Rack & Pinion Operation
Provides a smooth constant control of the door through its full opening and closing cycle. 180° door swing can be achieved when door, frame, hardware and arm function do not interfere.

Non-handed
With few exceptions all series 7500 and series 7700 door closers are non-handed and can be installed on either right or left hand swing doors. Pinion shaft extends vertically through the closer body in both directions. This permits the closer to be positioned on either right or left hand doors for most applications. Some options, as noted on pages 6-7, will require that the hand of the closer be specified.

Sweep Speed Control Valve
Allows adjustment of door speed from the doors full open position down to approximately 10° from the closed position.

Latch Speed Control Value
Allows adjustment of door speed from approximately 10° down to the door's fully closed position.

Tri-Style® Packing
7500 comes with screws, brackets and soffit plates to allow for regular, top jamb, and parallel arm installations.

Adjustable Backcheck Cushion Valve
Provides control of the door in the opening cycle, beginning at approximately 75° of door opening. It slows/cushions the door opening, when the door is forcibly opened beyond its pre-adjusted limits.

Adjustable Backcheck Position Valve
Allows the door opening position, where backcheck cushioning begins, to be adjusted to a greater door angle, up to a maximum of 20° farther (approximately 95°).

Standard Molded Cover
Is molded of high-impact U.L. listed material and covers the entire closer body assembly. This cover is non-handed for all applications.

Warranty
These closers carry a limited ten-year warranty against defect, and life of the building on the aluminum housing.

Closer Fluid
NorGlide® closer fluid is a specially formulated multi-viscosity hydraulic fluid that contains lubricity and anti-oxidation agents that provide optimum performance and efficiency. This fluid complements the interaction of the door closer's aluminum housing with its steel and zinc components, while maintaining stable viscosity to allow the door closer to perform in temperatures ranging from extremely high to as low as -40° F.

Door Closer Power Options

Series 7700 Sized Door Closer
Is available in five different power sizes (2, 3, 4, 5 or 6). Each power size is adjustable up to 50% stronger than the minimum closing force for that size, as outlined in ANSI specification A156.4.

Series 7500 Multi-sized Door Closer
Is adjustable through the entire power range of door closer sizes 1 through 6, as outlined in ANSI standard A156.4.

The series 7500 also conforms to the minimum opening force requirements of the Americans with Disabilities Act (A.D.A.) and ANSI standard A117.1 for interior doors.

OPTIONAL FEATURES

Corrosion-Resistant Door Closer
The series 7500SS door closers with molded plastic cover are available for use where corrosive conditions exist. This series is provided with zinc diecast adjustment valves, a 440 grade stainless steel pinion shaft, an all-aluminum body and bronze closer arm bushing; all other components and fasteners are of 302/303 grade stainless steel. This product is available for standard regular arm, top jamb and parallel arm, non-hold open, applications only.

Optional Metal Cover
This steel cover is non-handed for regular and parallel arm applications, but is handed for top jamb applications. Cover is available in sprayed or architectural plated finishes.

Security Cover
Is supplied standard with all series 7570/7770 door closers. This deep drawn steel cover is handed for all applications. The cover is fastened to the closer body at two points on top and to the door closer body stand-offs at two points on the bottom.

OPTIONAL FEATURES DELAYED ACTION

Adjustable Delayed Action Closing

An optional hydraulic feature that adds a third speed range to the closing cycle. This feature becomes effective when the door is opened and released at any point beyond 70°. The amount of time delay depends upon the combination of the angle of door release and valve adjustment. The valve can be adjusted with a 1/8" (3mm) hex key from no delay time up to maximum delay times of:

Door Opened and Released at	Approximate Time of Delay Cycle
180°	4-5 minutes
120°	2-3 minutes
90°	25-30 seconds

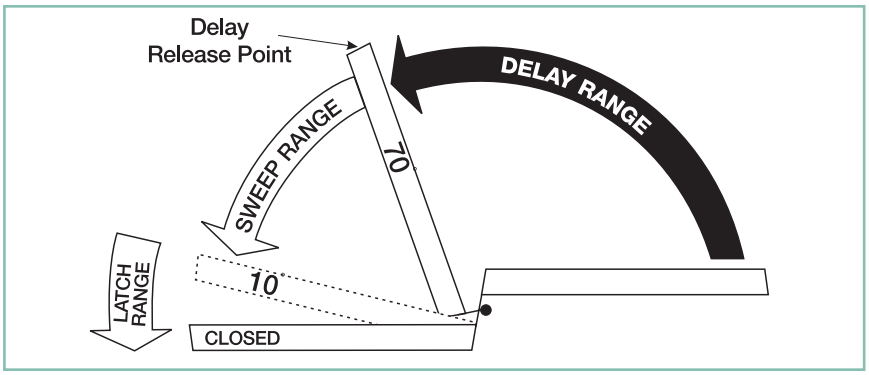

Pressure Relief Safety Valve

The delayed action hydraulic system contains a pressure relief valve. Any time the door is forced toward the closed direction while it is in the closing cycle, the valve will open and permit the door to close. This prevents damage to door, frame and closer.

Suggested Applications

Delayed Action closing allows slow-moving traffic to clear the opening before the door closer's normal closing cycle begins. This feature can be helpful in health care facilities such as hospitals and nursing homes. It provides sufficient time for persons on crutches or in wheelchairs to pass through a door without concern of it closing. At the same time, it can accommodate the facility's staff with movement of food service carts, beds, and other wheeled traffic.

Use of delayed action closers on many doors throughout industrial and commercial buildings can also assist the flow of traffic. Locations where additional time to clear the opening is advantageous are doors between office and factory/warehouse facilities, doors to workshops or laboratories, to kitchen and food processing areas... to list just a few.

OPTIONAL FEATURES ARMS

Non-Hold Open

Self-closes door every time door is opened. Auxiliary stop (by others) required except when using the CloserPlus®, CloserPlus Spring™ or Unitrol® arms.

Hold Open

Achieved by means of friction or ball and detent/roller. Friction hold open has a range of 90° to 180° using template location and mechanical adjustment.

Ball and detent or roller hold open is effective in a range of 85° to 110°.

Hold open arm door closers are not permitted to be used on fire door assemblies.

Door Opening Degrees

Arm Function	Regular Arm, Top Jamb Parallel Arm	Parallel Rigid Arm	CloserPlus® Parallel Arm	CloserPlus Spring™ Parallel Arm	Unitrol® Parallel Arm	Unitrol® Top Jamb	Low Profile Regular, Parallel	Slide Track
NON-HOLD OPEN	✓	✓	85° TO 110°	85° TO 110°	85° TO 110°	85° TO 110°	✓	85° TO 110°/180°
HOLD OPEN	90° TO 180°	85° TO 180°	85° TO 110°	85° TO 110°	85° TO 110°	85° TO 110°	N/A	85° TO 110°

✓=180° trim and template permitting

SPECIAL FUNCTION DOOR CLOSER

7700 Special Function Door Closers

Telephone Booth Operation

Closer holds the door to the telephone booth open at 5° from the closed position. This prevents the light switch from being activated and allows the booth to be ventilated. It also indicates to users that the booth is unoccupied. Available in size 2 only for regular arm or top jamb application only.

Coupon Booth Hold Open

Most commonly used on doors to safe deposit box inspection cubicles. Closer holds the door to the booth open at 15° to indicate that the booth is available for use by a safe-deposit-box renter. When the door is opened, the closer will close the door and engage the lock, providing the occupant with the desired privacy. Available in sizes 2 and 3 only for regular arm, top jamb or parallel arm application. Specify hand.

Hospital Hold Open

Closer will hold door open at approximately 15° for ventilation, 45° for observation and beyond 90° for full access.

Closer is supplied with a standard hold open arm for the beyond 90° hold open position. Available in sizes 3 and 4 only for regular arm, top jamb or parallel arm application. Specify hand.

SUGGESTED SPECIFICATIONS

7500 Series

Closers for interior and exterior doors shall be full rack-and-pinion type with cast aluminum alloy body. Closers shall be surface mounted and shall project no more that 2-1/8" from the surface of the door. Closers shall be non-handed to permit installation on doors of either hand. Closer fluid shall contain lubricity and anti-oxidation agents. Closer fluid shall maintain stable viscosity to allow door closer to perform in temperatures ranging from extremely high to as low as -40°F. Closers shall have multi-size spring power adjustment to permit setting of spring from (BF)1 through 6 with additional spring power available. Closers shall have two non-critical valves, hex key adjusted, to independently regulate sweep and latch speed. Closers shall have backcheck cushioning controlled by a hex key adjusted valve. Closers shall have backcheck position controlled by a hex key adjusted value.

[Closers shall have adjustable delayed-action closing controlled by a hex key adjustable valve.]

[Closers shall be highly corrosion resistant and shall have all external body components of aluminum, zinc alloy or stainless steel material and all fasteners of stainless steel.]

Regular arm and top jamb closers shall have a non-hold open shoe permitting 15% (+/ – 7-1/2%) power adjustment.**Closers shall be enclosed in a [molded resin cover] [plated or sprayed metal cover]. Closers to be *Norton* [7500] [7500M] [7500SS] [7500SSM].

**For special arms insert the appropriate specification from column three on this page.

7700 Series

Closers for interior and exterior doors shall be full rack-and-pinion type with cast aluminum alloy shell. Closers shall be surface mounted and shall project no more that 2-1/8" from the surface of the door. Closers shall be non-handed to permit installation of doors of either hand. Closer fluid shall contain lubricity and anti-oxidation agents. Closer fluid shall maintain stable viscosity to allow door closer to perform in temperatures ranging from extremely high to as low as -40°F. Closers shall have power adjustment to permit a 50% increase in power over the minimum closing force for each size. Closers shall have two non-critical valves, hex key adjusted, to independently regulate sweep and latch speed. Closers shall have backcheck cushioning controlled by a hex key adjusted valve. Closers shall have backcheck position controlled by a hex key adjusted value.

[Closers shall have adjustable delayed action closing controlled by a hex key adjustable valve.]

Regular arm and top jamb closers shall have a non-hold open shoe permitting 15% (+/ – 7-1/2%) power adjustment.** Closers shall be enclosed in a [molded resin cover] [plated or sprayed metal cover]. Closers to be *Norton* [7700] [7700M].

**For special arms insert that specification here (see column three on this page).

**Unitrol® Arm

Door closers shall have built-in door stop [and holder] effective at one point selected at installation, from 90° - 115° in five-degree increments. Door stop shall be cushioned by a shock-absorbing heavy-duty spring action effective at the [soffit plate] [arm shoe] pivot. [Closers shall be provided for parallel arm installation using rigid steel main arm and secondary arm lengths proportional to the door width.] [Closers shall be provided for top jamb installation using steel, rigid main arm and telescoping secondary arm adequate for the frame reveal of the openings.]

**CloserPlus® Arm

Door closers shall have built-in door stop [and holder] effective at one point selected at installation, from 85° - 110° in five-degree increments. Door stop mechanism shall be non-handed and attach to soffit plate. [Hold open mechanism shall have engage/disengage selection actuated by thumbturn]. Closers shall be provided for parallel arm installation using rigid steel main and secondary arm.

**CloserPlus Spring™ Arm

Door closers shall have built in door stop [and holder] effective at one point selected at installation, from 85° - 110° in five-degree increments. Door stop mechanism shall have a buffer spring that engages prior to the dead stop feature, reducing shock loads to the door and frame assemble. Door stop mechanism shall be non-handed and attached to soffit plate. [Hold open mechanism shall have engage/disengage selection actuated by thumbturn]. Closers shall be provided for parallel installation using rigid steel main and secondary arm.

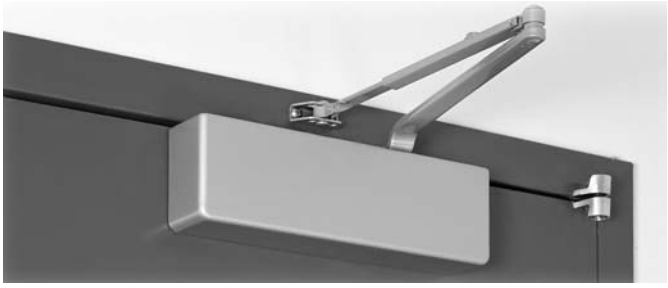

Non Hold Open Arm Shown

Regular Arm

This is the only pull-side application where a double lever arm is used. It is the most power efficient application for a door closer. Sufficient frame, door and/or ceiling clearance must be considered.

Since the arm assembly projects directly out from the frame, this application may present an aesthetics issue or be prone to vandalism.

Non Hold Open Arm Shown

Top Jamb

For efficiency reasons this application provides the best alternative to the regular arm application. There must be sufficient frame face and/or ceiling clearance for this application. It requires a top rail on the door of just 2-1/8″ (54mm). This application provides the best door control for doors in exterior walls that swing out of a building.

The entire door closer and arm assembly project from the frame, similar to the regular arm application, where the matters of appearance and malicious abuse can be of concern. Consideration must be given to depth of reveal.

Non Hold Open Arm Shown

Parallel Arm

This application provides the most appealing design appearance for a surface-mounted door closer having a double lever arm. This also makes it beneficial in vandalism-prone areas. It is on the push side of the door and the arm assembly extends almost parallel to the door. In the closed position, there is very little or no hardware projecting beyond the frame face in most situations.

Due to the geometry of the arm it is approximately 25% less power-efficient than a regular arm application.

The entire closer and arm assembly are mounted below the frame stop, requiring a top rail clearance on the door of between 6-5/8" (168mm), when using a low profile arm, to 7-1/4″ (184mm), when using the hold open arm.

APPLICATIONS

Corner Bracket

This application can be used where top jamb and parallel arm application will not accommodate the door and frame conditions. Requires minimal top rail on the door; however, vertical clearance to the floor within the door opening should be checked to ensure code compliance.

The close proximity, for this application, of the door closer to the door's pivot point reduces the door closer's power efficiency by approximately 25% when compared to a regular arm. The projection of the arm from the door face might pose questions regarding design parameters.

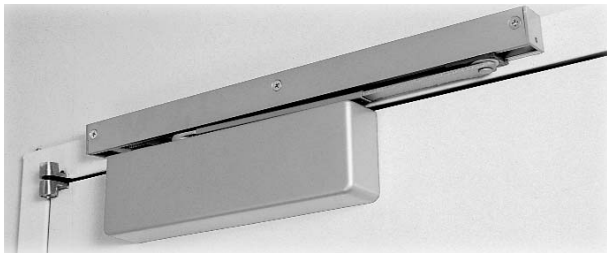

Pull Side

Low Profile Pull Side

Push Side

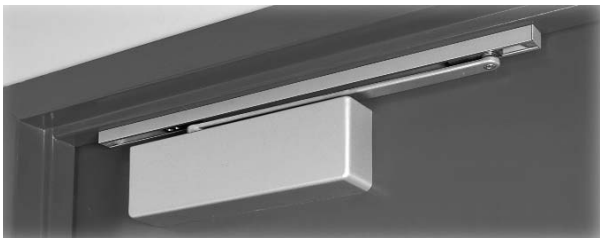

Low Profile Push Side

Slide Track

Whether pull or push side mounted, this provides the designer with the smoothest lines available in a surface mounted door closer. The single lever arm allows components to be located in a stack configuration to minimize projection and eliminate obtrusive arm angles.

The arm geometry reduces door closer power efficiency by approximately 25% from that of a regular arm.

A variation of the standard slide track application is available for pocket doors, where it is desirable to have the door closer completely concealed when the door is in the 90° open position. See page 26 for details.

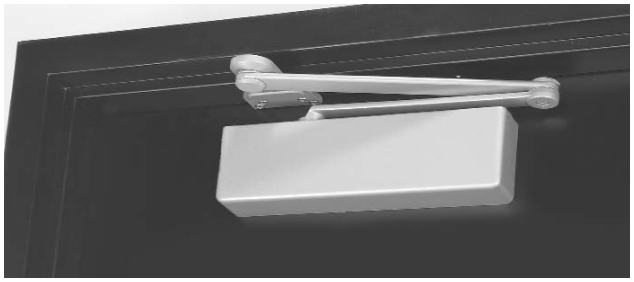

Non Hold Open Arm Shown

Parallel Rigid Arm

An enhanced variation of the standard parallel arm assembly that is intended for use in heavy traffic areas where auxiliary door stops are installed.

Hold open available - specify hand when ordering.

Non Hold Open Arm Shown

Parallel Rigid Offset Arm

This heavy-duty parallel rigid arm provides additional vertical clearance. It is well suited for applications where weather-stripping or other hardware prevents the use of the standard Parallel Rigid (PR) soffit plate. The non hold open and hold arms allow 1-1/4" clearance. When used in conjunction with a #6891 spacer block, the PRO arm provides 1-7/8" clearance to accommodate the use of a surface overhead stop/holder.

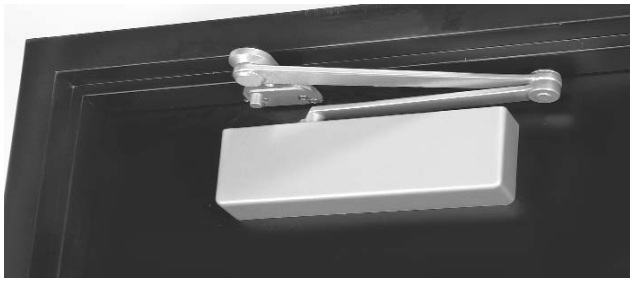

Non Hold Open Arm Shown

CloserPlus® Arm

Similar to the Parallel Rigid arm, this arm incorporates a stop at the arm's soffit plate to dead stop the door at a predetermined degree of door swing between 85° and 110°, in 5° increments. Prior to dead stop the door closer's backcheck feature slows the door speed to reduce the impact of the stop action.

CloserPlus arm is intended for use where an auxiliary door stop cannot be utilized and no more than moderate abuse is anticipated. Where more extreme conditions are expected, use of a Unitrol® arm is recommended.

Thumbturn hold open available. (Hold open strength is adjustable.)

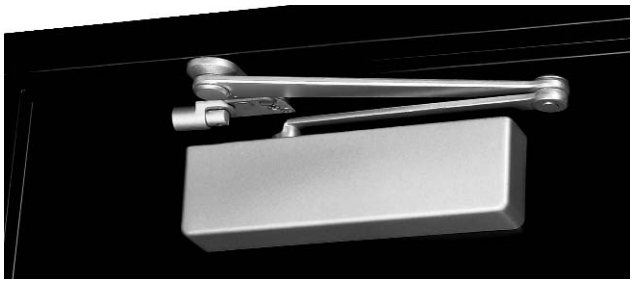

Non Hold Open Arm Shown

CloserPlus Spring™

This heavy-duty stop arm includes all of the features of the *CloserPlus* arm, plus an added buffer spring that is compressed prior to the arm hitting the dead stop point. This greatly reduces the shock of the stopping action that occurs with the *CloserPlus* arm detailed above.

Thumbturn hold open available.

APPLICATIONS

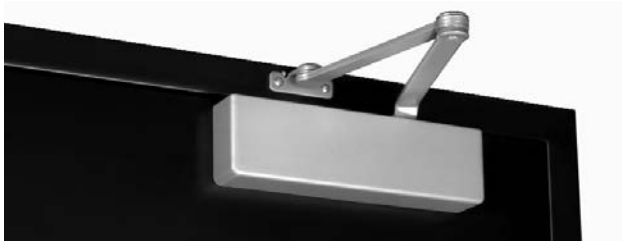

Non Hold Open Arm

Regular Rigid Heavy-Duty Arm

This double lever arm features a non-adjustable secondary arm. Orbitally riveted joints prevent tampering or disassembly. The rigid heavy-duty arm is standard with the security closers featuring a regular arm (7570 or 7770) but is also available with standard product. Prefix “R” to model number.

Available non hold open only.

Unitrol® Parallel Arm

Unitrol® Top Jamb

Unitrol® Arm

Can be used for either parallel arm or top jamb applications. *Unitrol* arms combine the features of a double lever arm overhead door stop/holder with the backcheck feature of the door closer to reduce door stopping shock loads to a minimum. They use a compression spring buffer at the soffit plate/arm shoe that will absorb 30 lbs. of force, 5° prior to the door’s dead stop. Coupled with the door closer’s backcheck feature, the Unitrol® Arm offers the most controlled stop available with a surface door closer.

For parallel arm applications there are three different length arm assemblies. Each length is designed for a specific range of door widths to provide precise door control. This further lessens the dead stop impact on the door’s hinges/pivots.

Low Profile-Regular Arm

Low Profile-Parallel Arm

Low Profile Arm

Supplied with 7780/7580 series door closers for non-hold open installations only. These arms have a reduced height elbow joint and a straight main arm. This enables the door closer to be installed in less vertical space:

Regular Arm allows closer to be installed where there is as little as 1" (25mm) of frame face or ceiling clearance.

Parallel Arm allows closer to be installed 1/2" (13mm) higher up on door than standard parallel arm application.

REGULAR ARM

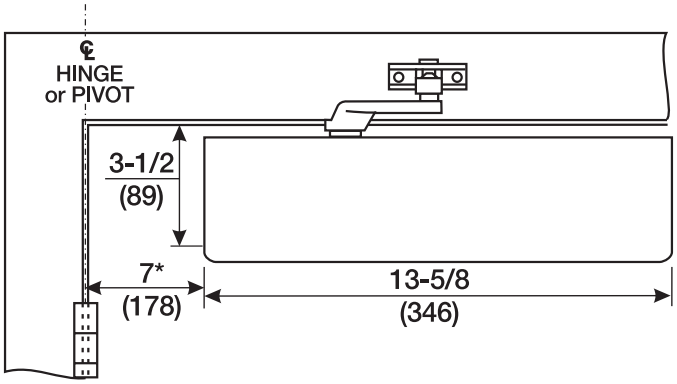

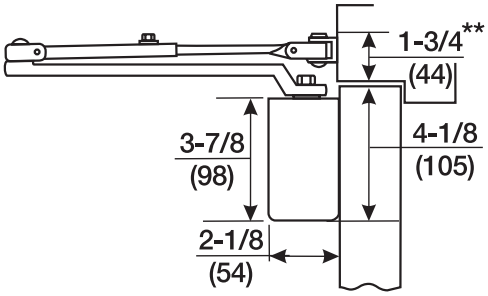

Mounting holes for closer body are spaced 2-3/8" (60mm) vertically x 6-3/4" (171mm) horizontally.
* For doors opening up to 100°
** This dimension will vary. Standard non-hold open arm illustrated.

Maximum Door Width Inches (cm)		Model Number			
		Sized Closers		Multi-Sized Closers	
Interior	Exterior	Non Hold Open	Hold Open	Non Hold Open	Hold Open
32" (81)	30" (76)	7702	7702H	7500	7500H
38" (97)	34" (86)	7703	7703H		
48" (122)	42" (107)	7704	7704H		
54" (137)	48" (122)	7705	7705H		
Unusual Conditions		7706	7706H		

Note: 7500 door closers are set at midpower range from the factory and can be adjusted for door sizes noted above.

TOP JAMB ARM

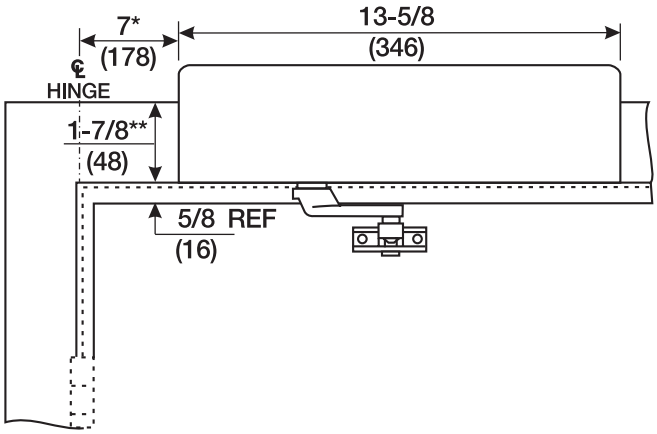

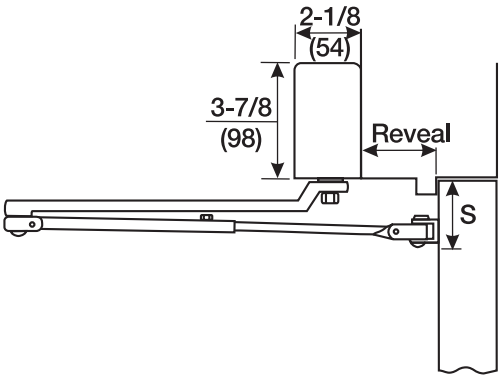

Mounting holes for closer body are spaced 2-3/8" (86mm) vertically x 6-3/4" (171mm) horizontally.
* For doors opening up to 100°
** Minimum frame face with 7786 drop plate. 3-1/4" (83mm) required when drop plate is not used.

Model Number		Reveal Range Inches	Maximum Door Opening
Multi-Sized	**Sized**	**Non Hold Open Arm**	
7500/7500M	7700/7730M	0" to 3" (0 to 76mm)	180°
J7500	J7700	2-3/4" to 7" (70 to 178mm)	150°
JL7500	JL7700	2-3/4" to 7" (70 to 178mm)	180°
J7580 x 7787	J7780 x 7787	0" to 2-3/4" (0 to 70mm)	180°
Multi-Sized	**Sized**	**Hold Open Arm**	
J7500/J7530MH	J7700H/ J7730MH	0" to 3" (0 to 76mm)	180°
J7500H	J7700H	2-3/4" to 6-3/4 (70 to 171mm)	150°
JL7500H	JL7700H	2-3/4" to 6-3/4" (70 to 171mm)	180°

S Minimum Top Rail of Door					
Without Drop Plate or with 7786 Back Plate (mm)			**With 7787 Drop Plate (mm)**		
J7700/ J7730M J7700 J7500/ J7530M J7500	J7700H/ J7730MH J7700H J7500H/ J7530MH J7500H	J7780 J7580	J7700/ J7730M J7700 J7500/ J7530M J7500	J7700H/ J7730MH J7700H J7500H/ J7530MH J7500H	J7780 J7580
2" (51mm)	2-1/2" (64mm)	N/A	4-1/8" (105mm)	4-5/8" (117mm)	3-5/8" (92mm)

Maximum Door Width Inches (cm)		Model Number			
		Sized Closers		Multi-Sized Closers	
Interior	**Exterior**	**Non Hold Open**	**Hold Open**	**Non Hold Open**	**Hold Open**
32" (81)	30" (76)	J7702	J7702H	7500	7500H
38" (97)	34" (86)	J7703	J7703H		
48" (122)	42" (107)	J7704	J7704H		
54" (137)	48" (122)	J7705	J7705H		
Unusual Conditions		J7706	J7706H		

Note: 7500 door closers are set at midpower range from the factory and can be adjusted for door sizes noted above.

PARALLEL ARM

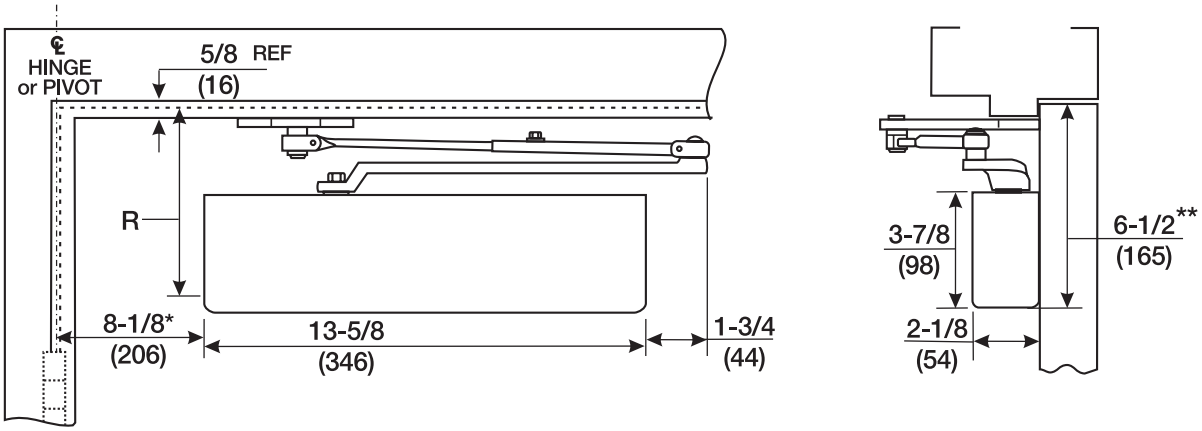

Mounting holes for closer body are spaced 2-3/8" (86mm) vertically x 6-3/4" (171mm) horizontally.
* For doors opening up to 100°.
** This dimension will vary. Standard non-hold open arm illustrated.

Maximum Door Width Inches (cm)		Model Number			
		Sized Closers		Multi-Sized Closers	
Interior	Exterior	Non Hold Open	Hold Open	Non Hold Open	Hold Open
30" (76)	—	P7702	P7702H	7500	7500H
36" (91)	30" (76)	P7703	P7703H		
42" (107)	36" (91)	P7704	P7704H		
48" (122)	42" (107)	P7705	P7705H		
54" (122)	48" (122)	P7706	P7706H		

Note: 7500 door closers are set at midpower range from the factory and can be adjusted for door sizes noted above.

R Minimum Top Rail of Door with 5/8" (16mm) Frame Stop				
Without Drop Plate (mm)			With 7787 Drop Plate (mm)	
P7700	P7700H	P7780	P7700H	P7780
5-7/8" (149mm)	6-1/4" (159mm)	5-3/8" (137mm)	2-3/4" (70mm)	1-7/8" (48mm)

PARALLEL RIGID ARM

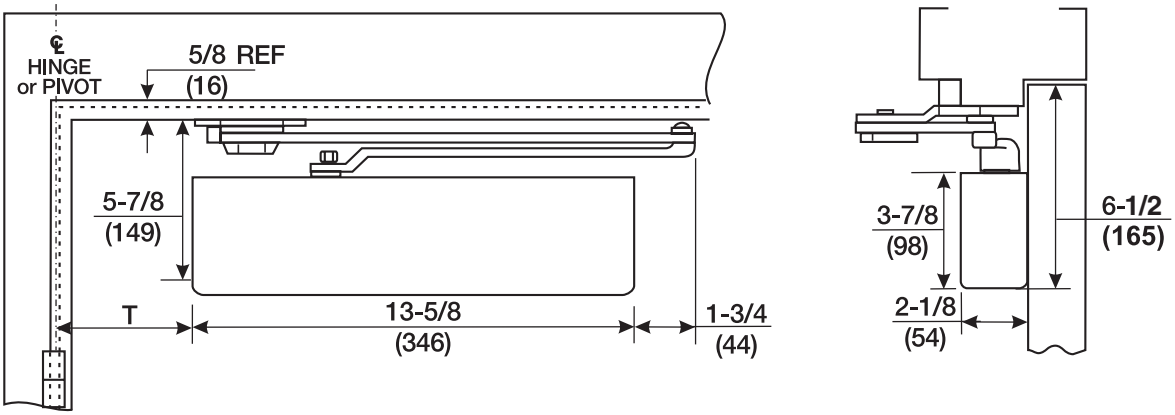

Mounting holes for closer body are spaced 2-3/8" (60mm) vertically x 6-3/4" (171mm) horizontally.

T Template Position Hold Open or Non Hold Open (mm)		
0° to 100°	101° to 120°	121° to 180°
8-1/8" (206)	7-1/8" (181)	6-1/8" (156)

Maximum Door Width Inches (cm)		Model Number			
		Sized Closers		Multi-Sized Closers	
Interior	Exterior	Non Hold Open	Hold Open*	Non Hold Open	Hold Open*
30" (76)		PR7702	PR7702H	PR7500	PR7500H
36" (91)	32" (81)	PR7703	PR7703H		
42" (107)	36" (91)	PR7704	PR7704H		
48" (122)	42" (107)	PR7705	PR7705H		
—	48" (122)	PR7706	PR7706H		

Note: 7500 door closers are set at midpower range from the factory and can be adjusted for door sizes noted above.

*Specify hand when ordering.

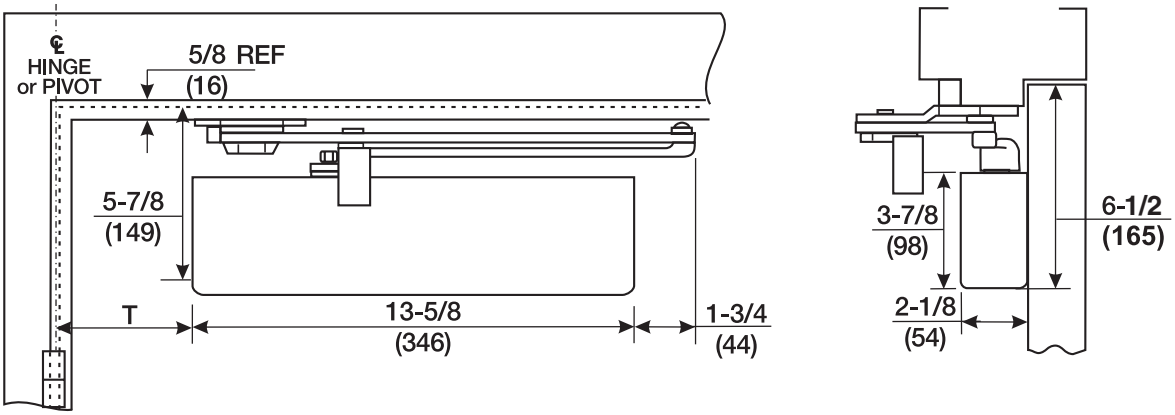

Mounting holes for closer body are spaced 2-3/8" (60mm) vertically x 6-3/4" (171mm) horizontally.

T Template Position for Hold Open or Stop at Listed Angle (mm)					
85°	90°	95°	100°	105°	110°
9-5/8 (244)	8-3/4 (222)	8-1/4 (210)	7-3/8 (187)	6-7/8 (175)	6-1/4 (159)

Maximum Door Width Inches (cm)		Model Number			
		Non Hold Open	Hold Open	Non Hold Open	Hold Open
Interior	Exterior				
30" (76)		CLP7702	CLP7702T	CLP7500	CLP7500T
36" (91)	32" (81)	CLP7703	CLP7703T		
42" (107)	36" (91)	CLP7704	CLP7704T		
48" (122)	42" (107)	CLP7705	CLP7705T		
—	48" (122)	CLP7706	CLP7706T		

Note: 7500 door closers are set at midpower range from the factory and can be adjusted for door sizes noted above.

CLOSERPLUS™ SPRING ARM

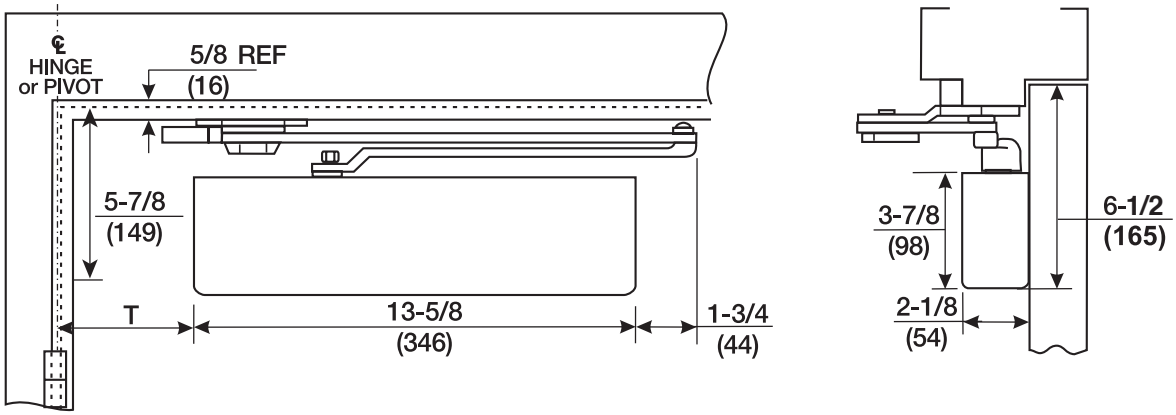

Mounting holes for closer body are spaced 2-3/8" (60mm) vertically x 6-3/4" (171mm) horizontally.

T Template Position for Hold Open or Stop at Listed Angle (mm)					
85°	90°	95°	100°	105°	110°
9-5/8 (244)	8-3/4 (222)	8-1/4 (210)	7-3/8 (187)	6-7/8 (175)	6-1/4 (159)

Maximum Door Width Inches (cm)		Model Number			
		Sized Closers		Multi-Sized Closers	
Interior	Exterior	Non Hold Open	Thumbturn Hold Open	Non Hold Open	Thumbturn Hold Open
30" (76)		CPS7702	CPS7702T	CPS7500	CPS7500T
36" (91)	32" (81)	CPS7703	CPS7703T		
42" (107)	36" (91)	CPS7704	CPS7704T		
48" (122)	42" (107)	CPS7705	CPS7705T		
—	48" (122)	CPS7706	CPS7706T		

Note: 7500 door closers are set at midpower range from the factory and can be adjusted for door sizes noted above.

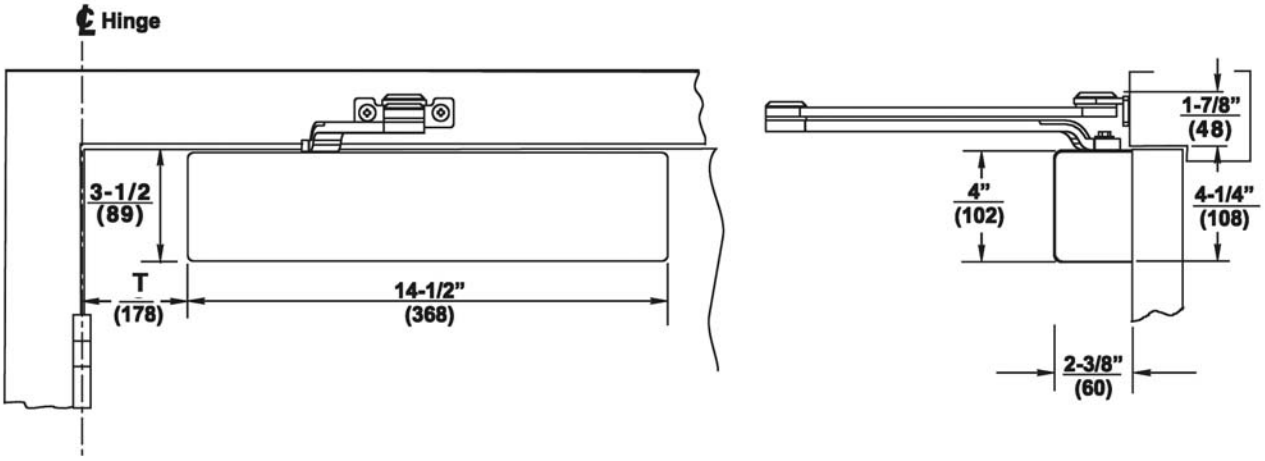

Mounting holes for closer body are spaced 2-3/8" (60mm) vertically x 6-3/4" (171mm) horizontally.

Door Opening	Dimensions T Inches (mm)
to 100°	6-3/8" (182)
100° to 120°	5-3/8" (137)
121° to 150°	3-3/8" (86)
151° to 180°	3-1/8" (79)

Maximum Door Width Inches (cm)		Model Number - Non Hold Open Only	
Interior	Exterior	Sized Closers	Multi-Sized Closers
36" (91)	30" (76)	R7702	R7500
42" (107)	36" (91)	R7703	
46" (122)	42" (107)	R7704	
54" (137)	48" (122)	R7705	
—	52" (132)	R7706	

Note: 7500 door closers are set at midpower range from the factory and can be adjusted for door sizes noted above.

UNITROL® PARALLEL ARM

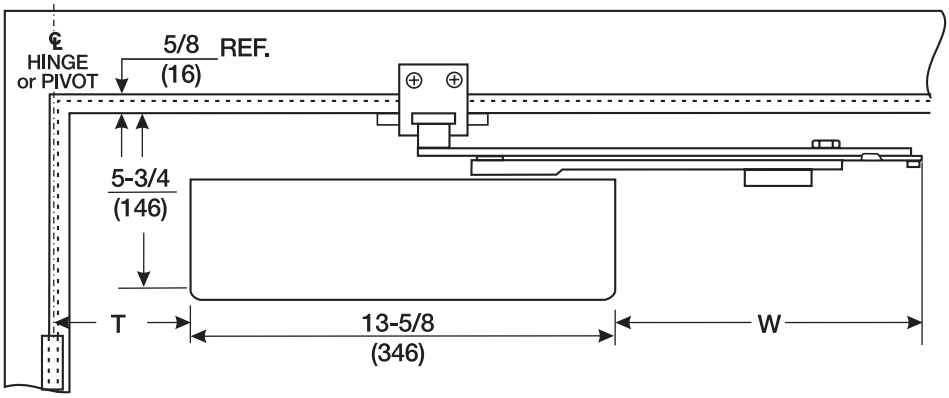

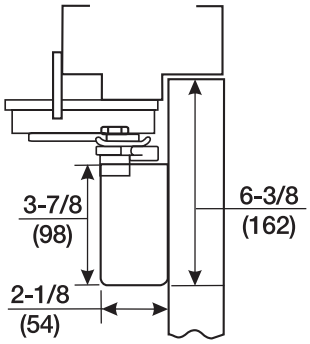

Mounting holes for closer body are spaced 2-3/8" (86mm) vertically x 6-3/4" (171mm) horizontally.
Door width must be specified when ordering.

Use 6190 bracket for reveals 1-7/8" - 4-5/8" (48 to 117mm). Reveals in excess of 4-5/8" (117mm) requires use of 6191 reinforcing kit. Reveals to 1/8" (3mm) require use of a 589L angle bracket.

Door Width Inches (cm)	Dimensional Information Shown in Inches (mm)						
	T Template Position for Hold Open at Listed Angle or Dead Stop at Listed Angle Plus 5°						W Arm Extension Beyond Closer
	85°	90°	95°	100°	105°	110°	
28-32" (71-81)	4" (102)	3-3/8" (86)	2-7/8" (73)	2-1/2" (64)	2-1/8" (54)	1-3/4" (44)	8-5/8" (219)
33-41" (84-104)	6-3/8" (162)	5-3/4" (146)	5-1/8" (130)	4-5/8" (117)	4-1/8" (105)	3-3/4" (95)	10-1/8" (257)
42-48" (107-122)	8-5/8" (219)	7-7/8" (200)	7-1/4" (184)	6-5/8" (168)	6-1/8" (156)	5-5/8" (143)	11-1/2" (292)

Maximum Door Width Inches (cm)		Model Number			
		Sized Closers		Multi-Sized Closers	
Interior	Exterior	Non Hold Open	Hold Open	Non Hold Open	Hold Open
30" (76)		UNI7702	UNI7702H	UNI7500	UNI7500H
36" (91)	30" (76)	UNI7703	UNI7703H		
42" (107)	36" (91)	UNI7704	UNI7704H		
48" (122)	42" (107)	UNI7705	UNI7705H		
—	48" (122)	UNI7706	UNI7706H		

Note: 7500 door closers are set at midpower range from the factory and can be adjusted for door sizes noted above.

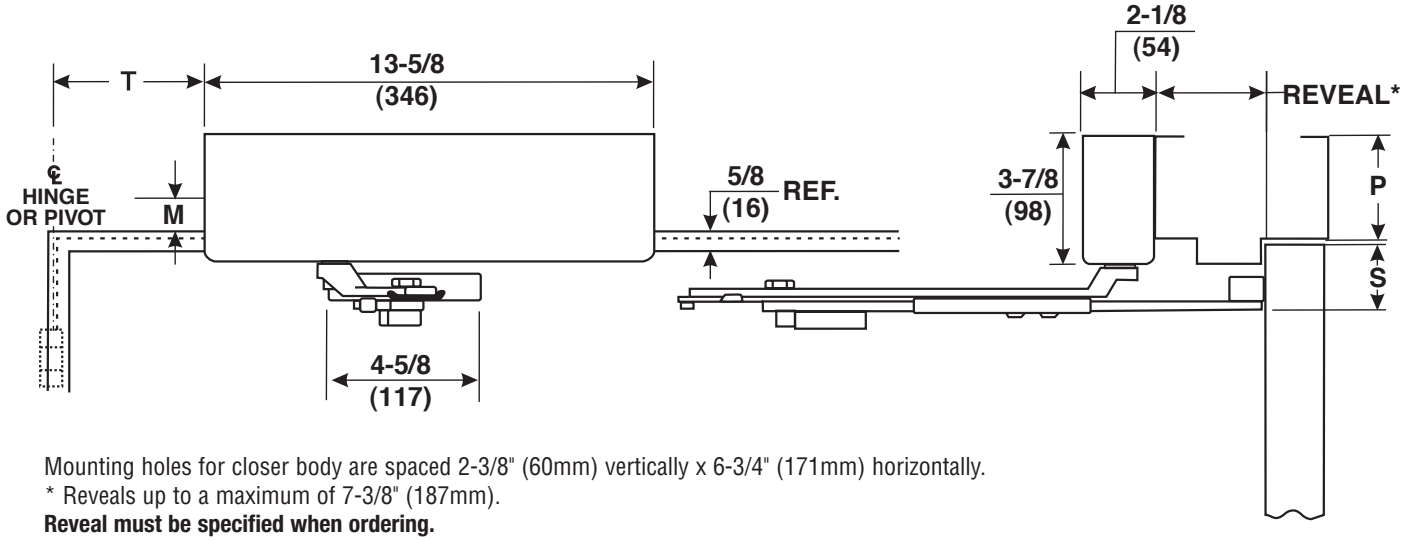

Mounting holes for closer body are spaced 2-3/8" (60mm) vertically x 6-3/4" (171mm) horizontally.
* Reveals up to a maximum of 7-3/8" (187mm).
Reveal must be specified when ordering.

Dimensional Information Shown in Inches (mm)											
M[1] Minimum Frame Face		P Minimum Ceiling Clearance		S Minimum Top Rail Clearance		T Template Position for Hold Open at Listed Angle or Hold Open at Listed Angle Plus 5°					
WITH 7786 BACK PLATE	WITH 7787 BACK PLATE	WITH 7786 BACK PLATE	WITH 7787 BACK PLATE	WITH 7786 BACK PLATE	WITH 7787 BACK PLATE	85°	90°	95°	100°	105°	110°
1-5/8" (41)	1-7/8" (48)	3-1/8" (79)	1-7/8" (48)	2-1/4" (57)	3-1/2" (89)	9-1/8" (232)	8-1/2" (216)	7-7/8" (200)	7-3/8" (187)	7" (178)	6-5/8" (168)

1. 7786 Back plate supplied standard with closer.

Maximum Door Width Inches (cm)		Model Number			
		Sized Closers		Multi-Sized Closers	
Interior	Exterior	Non Hold-Open	Hold-Open	Non Hold-Open	Hold-Open
34" (86)		UNIJ7702	UNIJ7702H	UNIJ7500	UNIJ7500H
42" (107)	34" (86)	UNIJ7703	UNIJ7703H		
48" (122)	42" (107)	UNIJ7704	UNIJ7704H		
54" (137)	48" (122)	UNIJ7705	UNIJ7705H		
—	54" (137)	UNIJ7706	UNIJ7706H		

Note: 7500 door closers are set at midpower range from the factory and can be adjusted for door sizes noted above.

PULL SIDE SLIDE TRACK

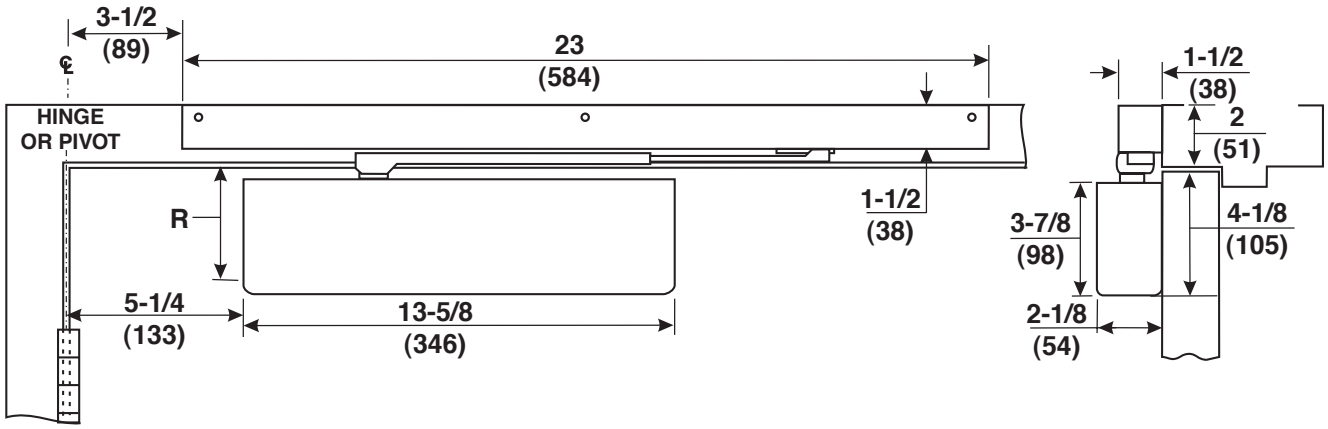

Mounting holes for closer body are spaced 2-3/8" (86mm) vertically x 6-3/4" (171mm) horizontally.

R Minimum Top Rail of Door with Frame Stop	
Without Drop Plate	**With 7786 Drop Plate**
3-1/2" (111mm)	2-5/8" (70mm)

Maximum Door Width Inches (cm)		Model Number [1, 2]					
		Sized Closers			Multi-Sized Closers		
		Non Hold Open		Hold Open	Non Hold Open		Hold Open
Interior	**Exterior**	**85°-100°**	**85°-180°**	**85°-100°**	**85°-100°**	**85°-180°**	**85°-100°**
32" (81)	—	7704ST 7704MST	7704ST-180 7704MST-180	7704STH 7704MSTH	7500ST 7500MST	7500ST-180 7500MST-180	7500STH 7500MSTH
38" (97)	32" (81)	7705ST 7705MST	7705ST-180 7705MST-180	7705STH 7705MSTH			
48" (122)	38" (97)	7706ST 7706MST	7706ST-180 7706MST-180	7706STH 7706MSTH			

Note: 7500 door closers are set at midpower range from the factory and can be adjusted for door sizes noted above.

1- Units can also be mounted with the closer body on the jamb. Prefix the model number with a "J". Where the frame face is less than 3-3/8" (86mm) a number 7786JP backplate will be required.

2- Units can also be installed on double egress doors using a handed arm that will accommodate the frame profile. Suffix the model number with "DE".

PUSH SIDE SLIDE TRACK

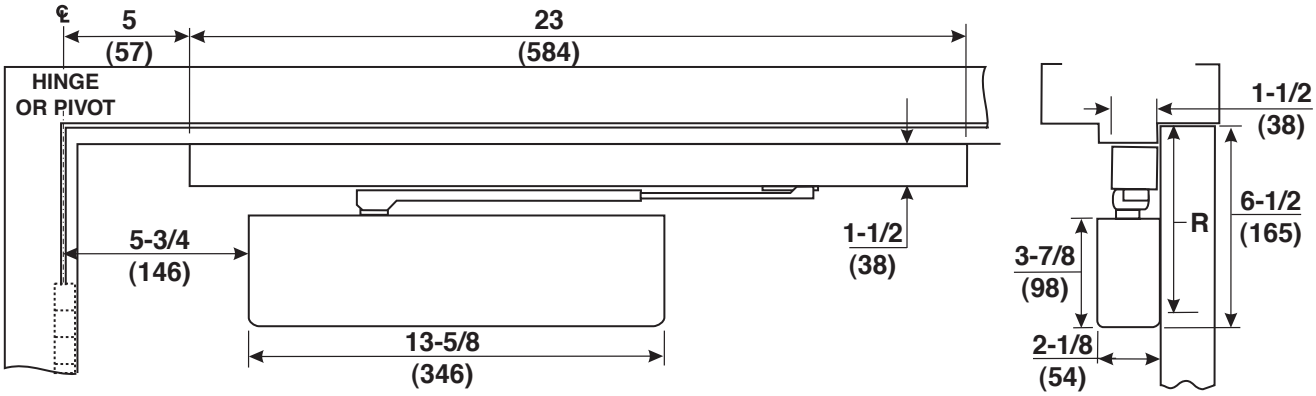

Mounting holes for closer body are spaced 2-3/8" (86mm) vertically x 6-3/4" (171mm) horizontally.

R Minimum Top Rail of Door with Frame Stop	
Without Drop Plate	**With 7786 Drop Plate**
6" (152mm)	2-5/8" (67mm)

Maximum Door Width Inches (cm)		Model Number			
		Sized Closers		Multi-Sized Closers	
Interior	**Exterior**	**Non Hold Open 85°-180°**	**Hold Open 85°-180°**	**Non Hold Open 85°-100°**	**Hold Open 85°-100°**
32" (81)	—	PS7704ST PS7704MST	PS7704STH PS7704MSTH	PS7500ST PS7500MST	PS7500STH PS7500MSTH
38" (97)	32" (81)	PS7705ST PS7705MST	PS7705STH PS7705MSTH		
48" (122)	38" (97)	PS7706ST PS7706MST	PS7706STH PS7706MSTH		

Note: 7500 door closers can be adjusted for door sizes noted. Multi-size closers are set at mid power range from the factory.

LOW PROFILE PULL SIDE SLIDE TRACK

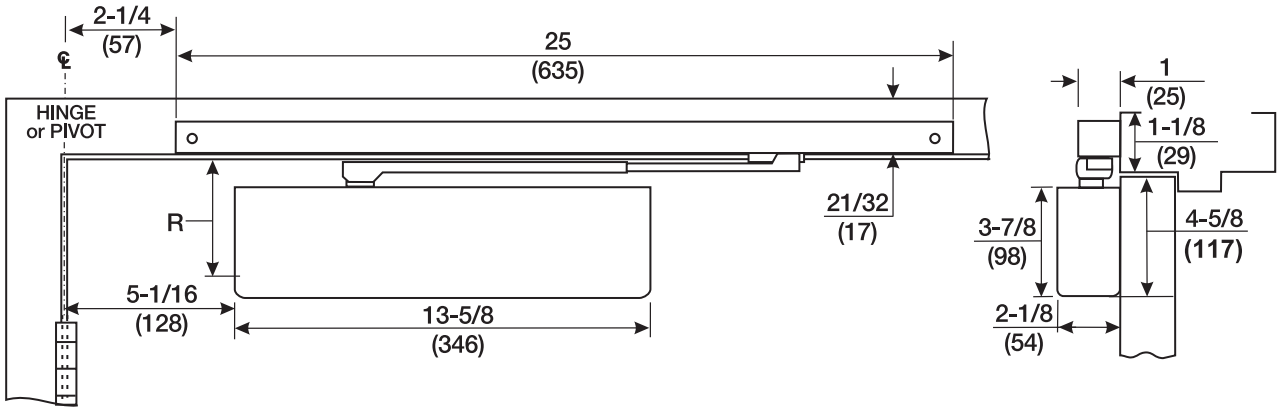

Mounting holes for closer body are spaced 2-3/8" (60mm) vertically x 6-3/4" (171mm) horizontally.

R Minimum Top Rail of Door with Frame Stop	
Without Drop Plate	**With 7786 Drop Plate**
3-1/2" (89mm)	2" (51mm)

Maximum Door Width Inches (cm)	Model Number			
	Sized Closers		Multi-Sized Closers	
Interior	**Non Hold Open**	**Hold Open**	**Non Hold Open**	**Hold Open**
32" (81)	P7744ST	P7754ST	P7540ST	P7550ST
38" (97)	P7745ST	P7755ST		
48" (122)	P7746ST	P7756ST		

Note: 7500 door closers can be adjusted for door sizes noted. Multi-size closers are set at mid power range from the factory.

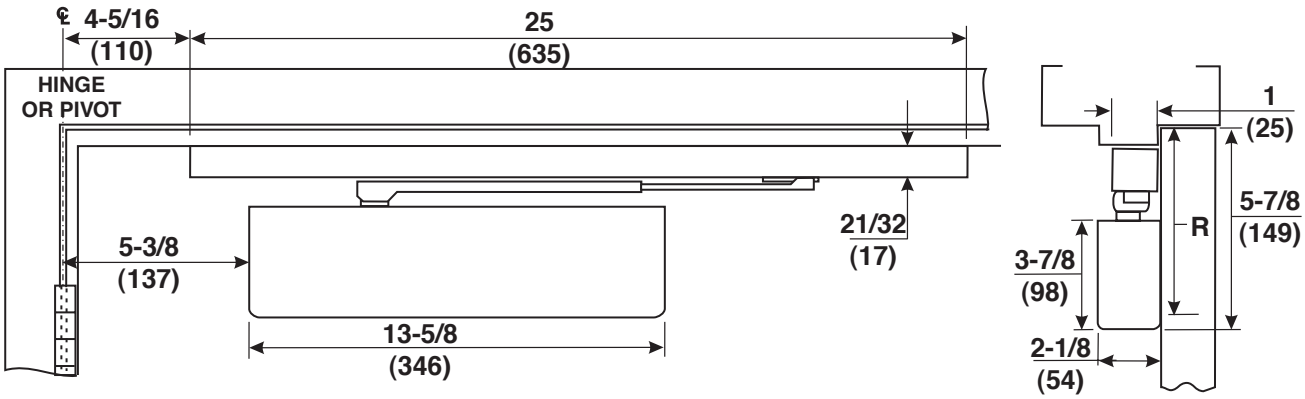

Mounting holes for closer body are spaced 2-3/8" (60mm) vertically x 6-3/4" (171mm) horizontally.

R Minimum Top Rail of Door with Frame Stop	
Without Drop Plate	**With 7786 Drop Plate**
5-1/4" (133mm)	3-5/8" (92mm)

Maximum Door Width Inches (cm)	Model Number			
	Sized Closers		Multi-Sized Closers	
Interior	**Non Hold Open**	**Hold Open**	**Non Hold Open**	**Hold Open**
32" (81)	7744ST	7754ST	7540ST	7550ST
38" (97)	7745ST	7755ST		
48" (122)	7746ST	7756ST		

Note: 7500 door closers can be adjusted for door sizes noted. Multi-size closers are set at mid power range from the factory.

POCKET DOOR 7706STP

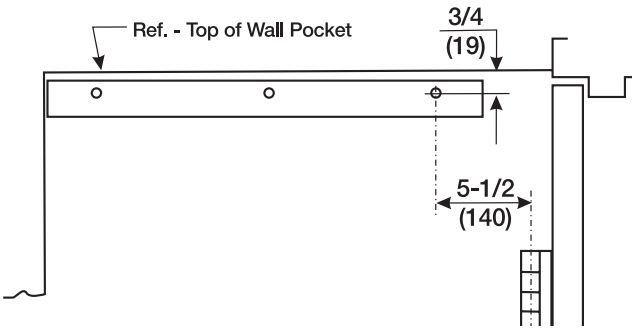

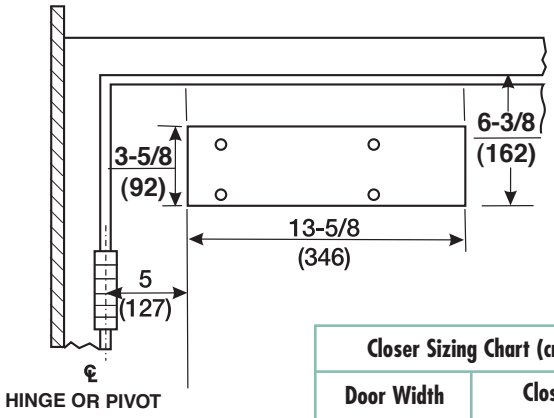

IMPORTANT
Wall Reinforcement (by others)
Must Be Sufficient to Withstand Door Action

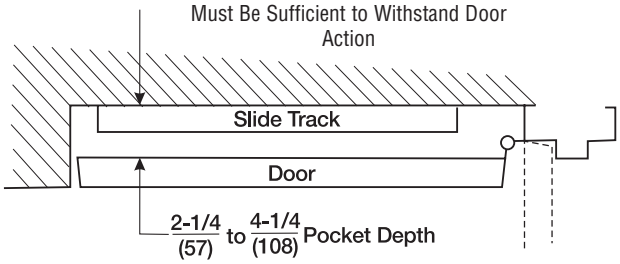

Closer Sizing Chart (cm)	
Door Width	**Closer**
42" (107)	7706STP
48" (122)	7706EP-STP

7706STP or 7706EP-STP Series Closers
Slide Track Closer for 90° Wall Pocket Installation
For Pocket Depths 2-1/4" to 4-1/4" (57mm to 108mm)
(See Chart for Closer Sizing)

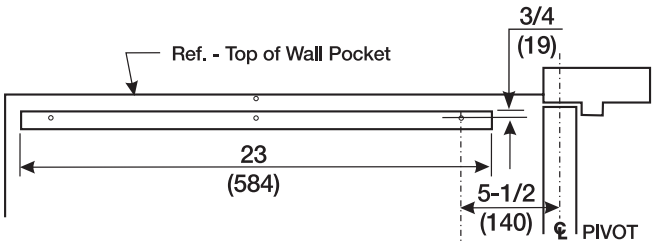

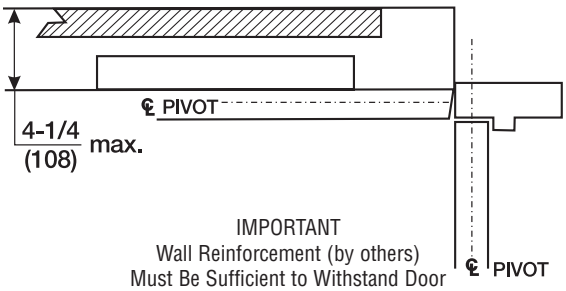

IMPORTANT
Wall Reinforcement (by others)
Must Be Sufficient to Withstand Door Action

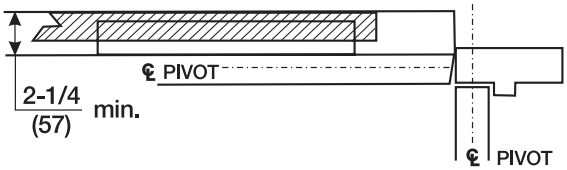

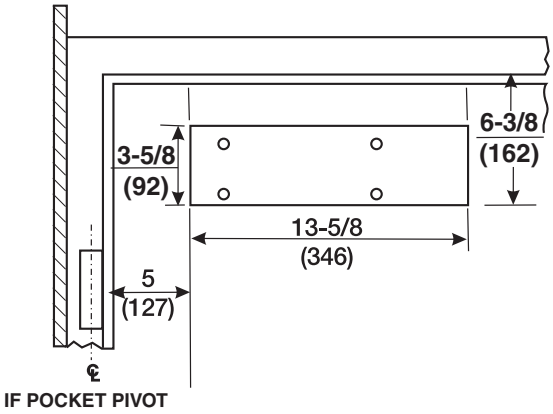

See chart (above) for closer sizing.

Norton®

RETROFIT PLATE

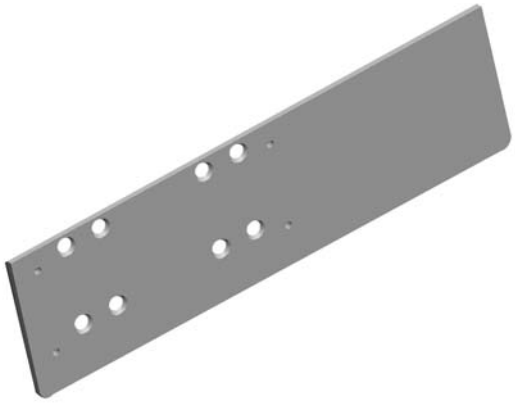

The retrofit plates allow a 7500 institutional Door Closer to replace 4040 or 4010 closer without modifying the existing hole pattern in the door. The plates will work with regular and parallel arm applications.

Note: The location of the arm shoe on the frame will change, therefore the fame must be patched.

Model Number	Replaces
RP75-4040	LCN-4040
RP75-4010	LCN-4010
RP75-M2020	Rixson M2020

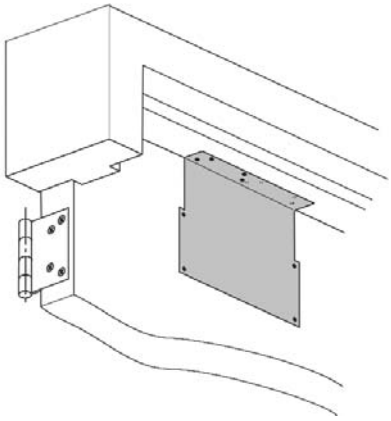

Norton Door Controls offers optional metal templates for the 7500 series door closers. These patented templates help the installer locate the correct mounting holes for several parallel arm applications.

Model Number	For Use With	Arm Applications
P77MT	7500 series closers	Parallel Arm (NHO only) Parallel Rigid, CloserPlus®, CloserPlus Spring™

REGULAR ARM

Closer Mounting Plate

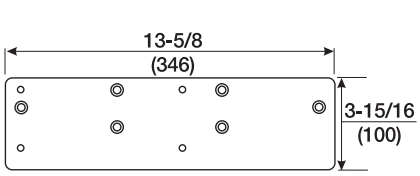

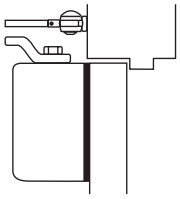

Narrow Top Rail - #7786 Drop Plate: For use where the narrow top rail of the door prevents the closer from being mounted directly to the door surface. This drop plate must be used for closer mounted on a top rail between 1-7/8" and 3-3/8" (48mm and 86mm) in height.

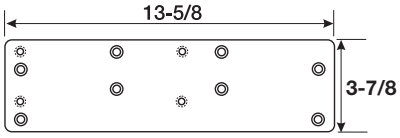

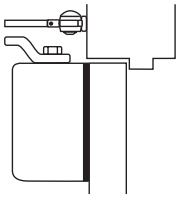

Overhead Door Holder - #7786OH Drop Plate: For use where a surface or concealed overhead door holder prevents normal arm mounting screws to clear the bottom of the door holder. This places the centerline of the arm mounting screws at 2-7/8" (73mm) from the top of the door.

Brackets for Non Hold Open Arms

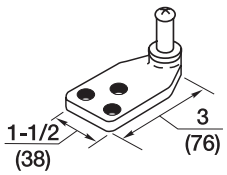

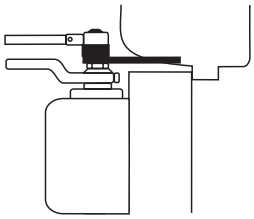

Molded/Bull Nose Trim - #2403 Bracket: For use where the door frame has molded or bull nose trim which will not accept a standard non-hold open shoe. The bracket is mortised into the frame rabbet, and projects beyond the face of the frame. It will accommodate a frame rabbet up to 2" (51mm) deep.

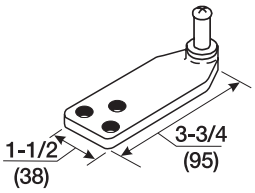

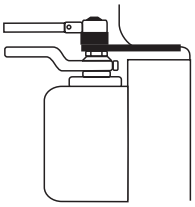

Molded/Bull Nose Trim - #2403-3/4 Bracket: This bracket is similar to - but longer than - the 2403 bracket. It is designed to accommodate frame rabbets from 2" to 2-7/8" (51mm to 73mm) deep.

Brackets for Hold Open Arms

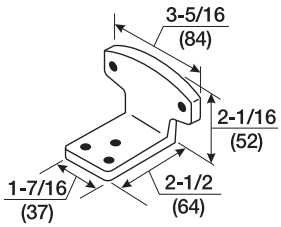

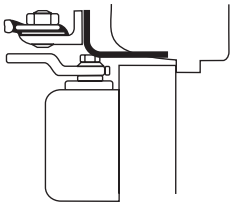

Molded/Bull Nose Trim - #80 Bracket: For use where the door frame has molded or bull nose trim which will not accept a standard hold open shoe. It is mortised into the frame rabbet, and projects beyond the face of the frame. It will accommodate a rabbet up to 2" (51mm) deep. This bracket is used in combination with the standard hold open mounting shoe.

Norton®

REGULAR ARM

Corner Brackets for Closer Mounting

For closer sizing information use the Parallel Arm Sizing Chart on page 15. The use of a corner bracket requires a door closer of the opposite hand from that of the door when ordering handed closers.

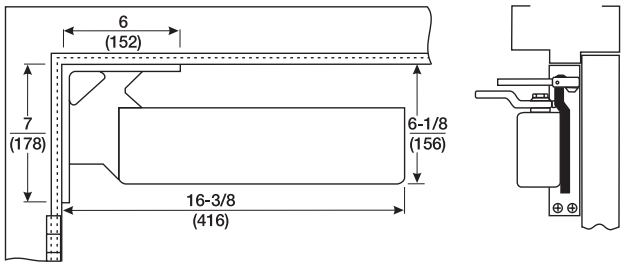

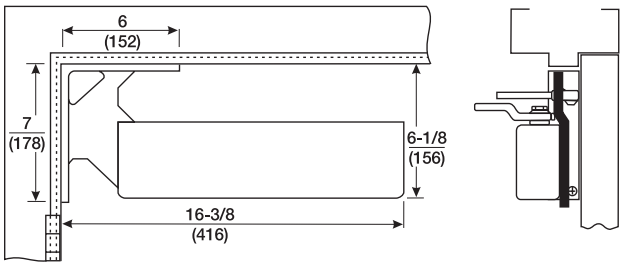

Mounting Opposite Hinge Side - #7798 Standard Drop Corner Bracket: For use where it is desired to mount a regular arm non-hold open closer.

Extra-Drop Mounting Opposite Hinge Side - #7797 Corner Bracket: For use where it is desired to mount a regular arm hold open closer, or where it is necessary for a regular arm non-hold open closer to clear a separate overhead door holder. This bracket drops the closer 1-1/8" (29mm) lower than the #7798 Corner Bracket.

TOP JAMB

Closer Mounting Plates

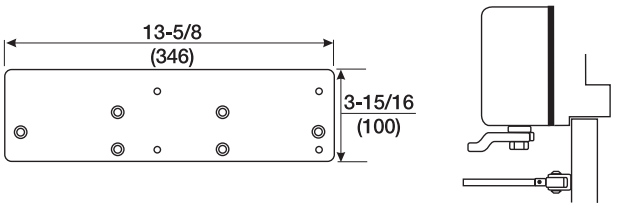

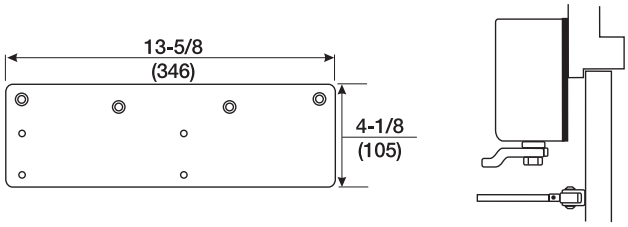

Narrow Frame - #7786 Back Plate: For use where a narrow frame face prevents the closer from being mounted directly to the frame. This back plate must be used for closer mounted on a frame between 1-7/8" and 3-1/8" (48mm and 79mm) in height.

Low Ceiling Clearance - Overhead Door Holder - #7787 Drop Plate: For use where the ceiling clearance is between 1-7/8" and 3-7/8" (48mm and 98mm) or where a surface or concealed overhead door holder prevents normal top jamb mounting. This plate drops the closer and allows the arm mounting screws to clear the bottom of the door holder. This places the centerline of the arm mounting screws at 3-1/8" (79mm) from the top of the door.

PARALLEL ARM

Closer Mounting Plate

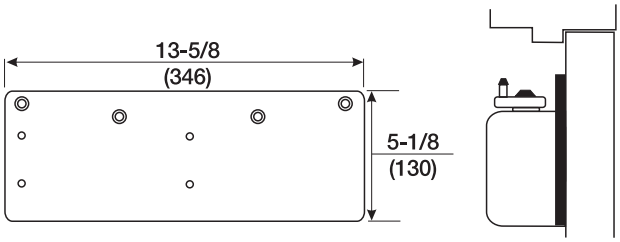

Narrow Top Rail - #7788 Drop Plate: For use where a narrow top rail prevents the closer from being mounted directly to the door surface. This drop plate can be used to mount a closer on a top rail as narrow as 2-1/2" (64mm) in height.

Brackets for Non Hold Open Arms

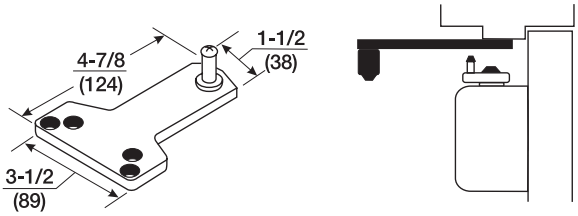

Standard Installation - #1618 Soffit Plate: This soffit plate is supplied standard with parallel arm closers. It can be mounted where the frame soffit is as narrow as 1" (25mm). Specify 1618A-SS for stainless steel soffit plate.

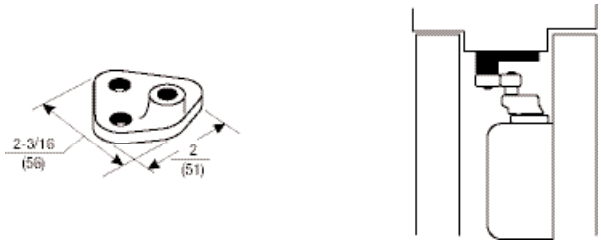

Mounting between Doors - #2018 Soffit Bracket: For use where insufficient space between companion doors does not permit use of other soffit plates. This bracket permits mounting of the closer between doors with as little as 3" (76mm) of header space. Permits closer arm to clear up to 5/8" (16mm) high stop.

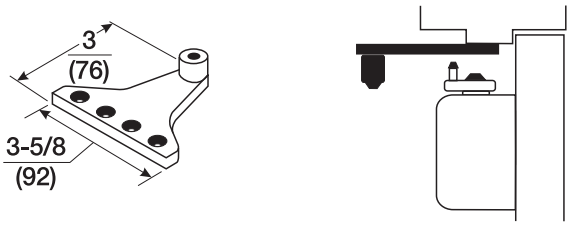

Narrow Frame/Removable Stop - #2018B Soffit Plate: For use where a narrow frame or frame with removable stop does not permit use of the standard soffit plate. This soffit plate may be mounted on the frame soffit or the frame rabbet where the stop does not exceed 5/8" (16mm) in height. All of the screw holes are in a straight line, requiring as little as 1-1/4" (32mm) of frame reveal to mount bracket and maintain good closer arm geometry. Where the frame soffit is as wide as 2" (51mm), this soffit plate may be used to clear weather-stripping that is up to 1-3/8" (35mm) wide and 5/8" (16mm) in height.

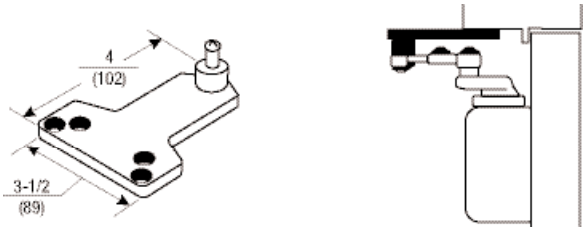

Blade/Applied Stop - #2018D Soffit Plate: For use where a blade or applied stop does not permit installation of the standard soffit plate. Mounts to either the frame soffit or rabbet. Since this soffit plate projects 7/8" (22mm) less than a standard soffit plate, it requires a minimum frame reveal of 1-1/2" (38mm). Permits closer to clear up to a 5/8" (16mm) stop.

Brackets for Non Hold-Open Arms (continued)

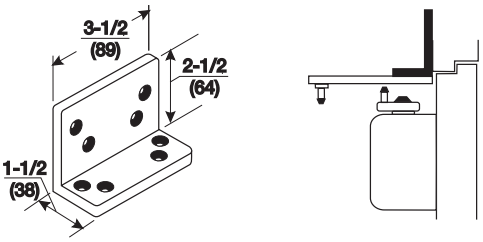

Flush Transom - #2022 Angle Bracket: For use where rabbeted or flush transom conditions prevent installation of a soffit plate. Used in combination with the 1618 soffit plate, or may be used in combination with the 2018S soffit plate when it is necessary for the closer arm to clear a separate overhead door holder.

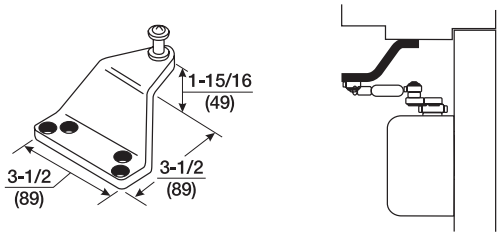

Extra-clearance - #2018S Offset Soffit Plate: For use where the need for additional clearance prevents use of the standard soffit plate. This plate mounts to the frame soffit to provide up to 2" (51mm) of clearance when a separate overhead door holder is used. Standard mounting requires a 2-5/8" (67mm) wide frame soffit. It may also be used where unusually high frame stops or weather-stripping prevent the use of other soffit plates.

Brackets for Hold-Open Arms

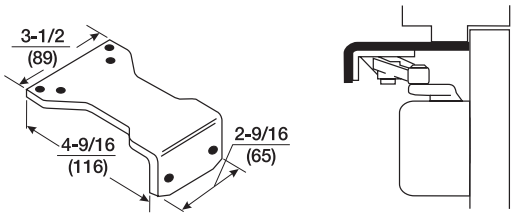

Parallel Hold-Open - #1628H Adapter Plate: This Adapter Plate is supplied standard with all parallel arm hold-open closers. It can also be used to convert regular arm or top jamb hold-open arms to parallel arm installation. It can be mounted where the frame soffit is as narrow as 1" (25mm).

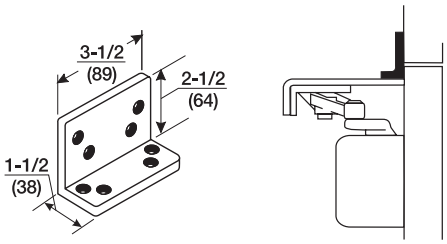

Flush Transom Hold-Open - #2022 Angle Bracket: For use where rabbeted or flush transom conditions prevent installation of the standard 1628H hold-open adapter plate. It is used in combination with the 1628H adapter plate.

PARALLEL RIGID ARM

Closer Mounting Plate

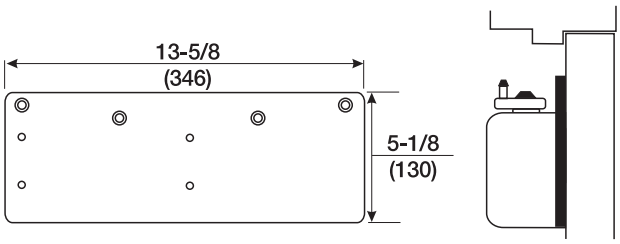

Narrow Top Rail - #7788 Drop Plate: For use where a narrow top rail prevents the closer from being mounted directly to the door surface. This drop plate can be used to mount a closer on a top rail as narrow as 2-1/2" (64mm) in height.

Brackets for Non-Hold Open Arms & Hold Open Arms

Standard - #2019S Spacer Block: For use where a narrow frame soffit does not provide adequate support for the soffit plate. Supplied as standard with all parallel rigid arm closers.

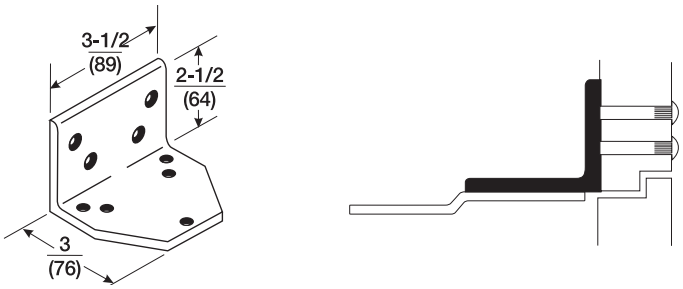

Flush Rabbeted Transom - #2019L Angle Bracket: For use where flush transom conditions prevent mounting of the standard soffit plate. This bracket is used in combination with the standard soffit plate.

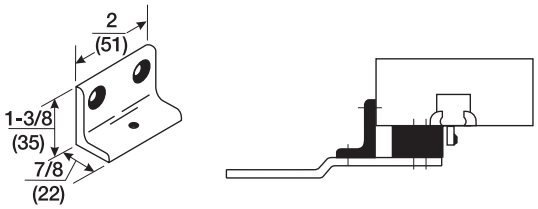

Narrow Frame - #6890 Support Bracket: For use where the frame is narrow, and the soffit plate cannot be mounted directly to the frame soffit or rabbet. Used in combination with the #6891 Spacer Block on blade stop frames to provide extra support and needed clearance of the blade stop.

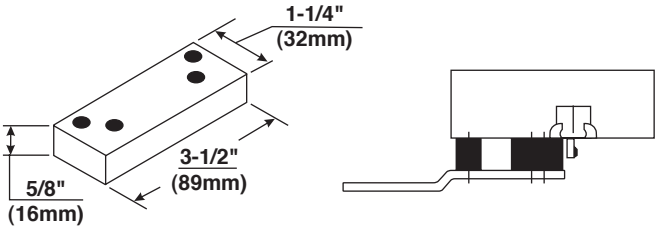

Clearance/Support Blade Stop - #6891 Spacer Block: For use where the door frame has a blade stop and the soffit plate must be mounted on the frame rabbet. This accessory is used in combination with the standard spacer block to provide clearance of the blade stop.

Closer Mounting Plate

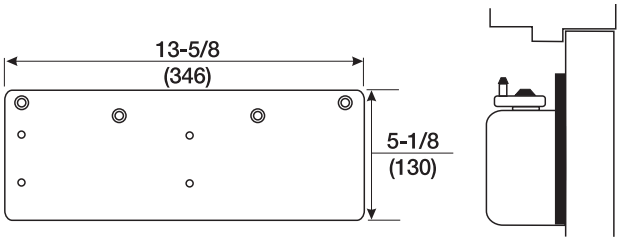

Narrow Top Rail - #7788 Drop Plate: For use where a narrow top rail prevents the closer from being mounted directly to the door surface. This drop plate can be used to mount a closer on a top rail as narrow as 2-1/2" (64mm) in height.

Brackets for Non-Hold Open Arms & Hold Open Arms

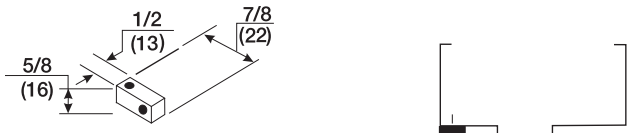

Standard - #2019S Spacer Block: For use where a narrow frame soffit does not provide adequate support for the soffit plate. Supplied as standard with all parallel rigid arm closers.

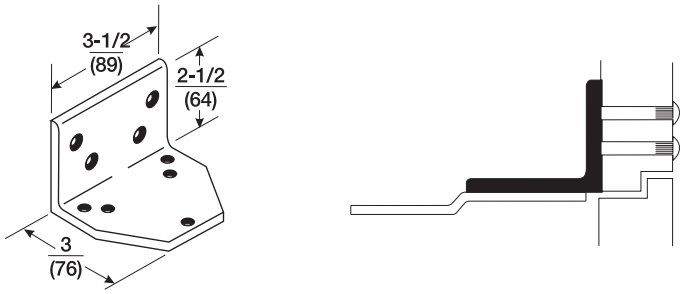

Flush Rabbeted Transom - #2019L Angle Bracket: For use where flush transom conditions prevent mounting of the standard soffit plate. This bracket is used in combination with the standard soffit plate.

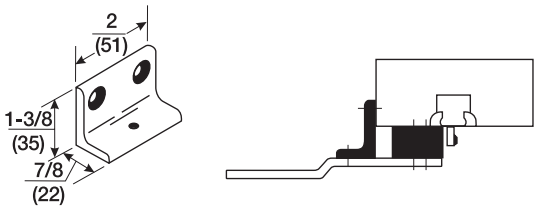

Narrow Frame - #6890 Support Bracket: For use where the frame is narrow, and the soffit plate cannot be mounted directly to the frame soffit or rabbet. Used in combination with the #6891 Spacer Block on blade stop frames to provide extra support and needed clearance of the blade stop.

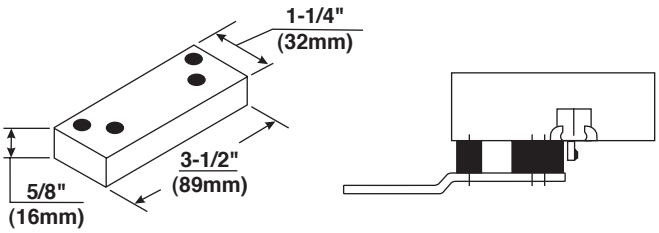

Clearance/Support Blade Stop - #6891 Spacer Block: For use where the door frame has a blade stop and the soffit plate must be mounted on the frame rabbet. This accessory is used in combination with the standard spacer block to provide clearance of the blade stop.

UNITROL® ARM

Closer Mounting Plate (for Parallel Arm)

Narrow Top Rail - #7788 Drop Plate: For use where a narrow top rail prevents the closer from being mounted directly to the door surface. This drop plate can be used to mount a closer on a top rail as narrow as 2-3/8" (60mm) in height.

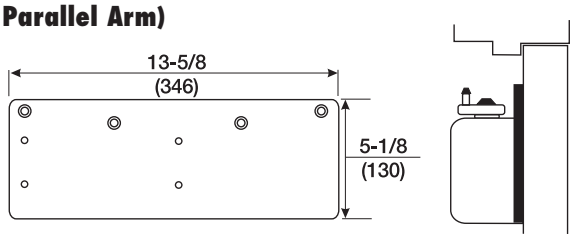

Soffit Plate Reinforcing Brackets (for Parallel Arm)

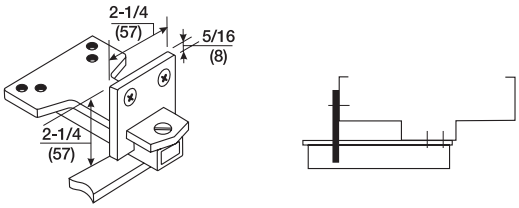

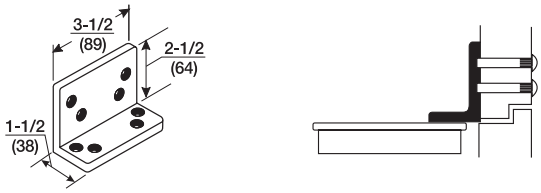

Additional Support - #6190 Reinforcing Bracket: Standard for use with all Parallel Arm *Unitrol* Door Controls. Provides additional support to the soffit plate on installations with door frame reveals from 1-7/8" to 4-5/8" (48mm to 117mm).

Flush Rabbeted Transom - #2022 Angle Bracket: Optional for use with all Parallel Arm *Unitrol* Door Controls. For use where rabbeted or flush transom conditions prevent installation of the soffit plate assembly. This bracket fastens to the overhead transom to provide a mounting surface for the soffit plate assembly.

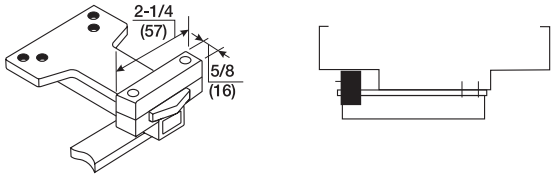

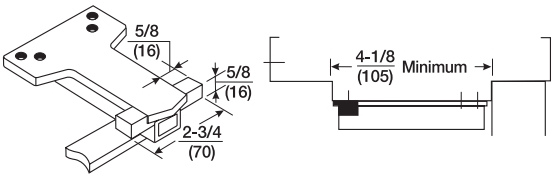

Wide Frame - #6191 Reinforcing Kit: Optional for use with all Parallel Arm *Unitrol* Door Controls. Used to support the soffit plate on installations with wide frames. Clamps may be used with or without the spacer block, depending on frame conditions.

Closer Mounting Plate (for Top Jamb)

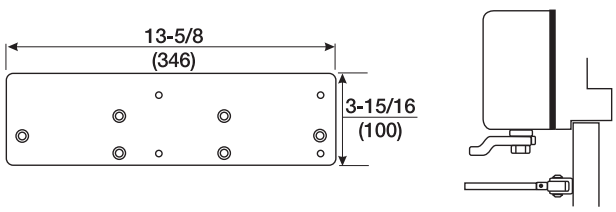

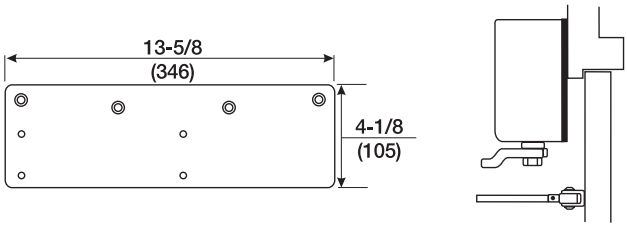

Standard Installation - #7786 Back Plate: Can be mounted where a frame face is as narrow as 1-5/8" (41mm) in height.

Minimum Ceiling Clearance - #7787 Drop Plate: For use where the ceiling clearance is as little as 1-7/8" (48mm).

Slide Track

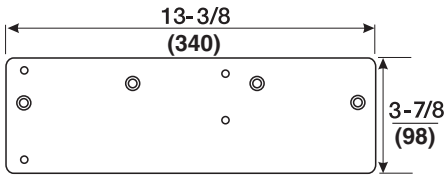

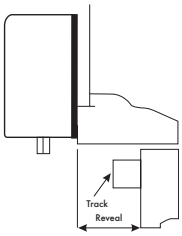

Slide Track - #7786JP Back Plate: Required for frames with standard 2" (51mm) profile face. Without plate, minimum 4" (102mm) face frame required.

DOOR CLOSER BODY ASSEMBLIES

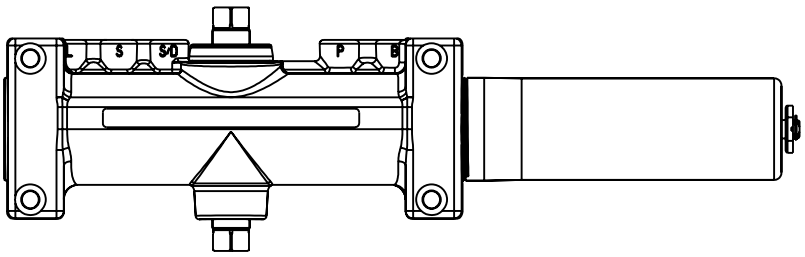

Model Number	Description
7500LAP	Multi-Size Closer Body
7500DALAP	With Delayed Action
770*LAP	Sized Closer Body
770*DALAP	With Delayed Action
J770*MLAP	Top Jamb Closer with Metal Cover
7706EPLAP	Closer with Extra Power
J7706EPMLAP	Top Jamb Closer with Metal Cover and Extra Power

LAP = Less All Parts
* Specify Size When Ordering

Torx© Screw Pack	
Arm Type	**Model Number**
Reg., Par. & Top Jamb	TX47
Parallel Rigid, CloserPlus® CloserPlus® Spring	PRTX47
Regular Rigid Heavy-Duty	RTX47
Unitrol® Arm	UNITX47

Closer Series	Closer Covers (Material)	Model Number
7700 7500 J7700 J7500	Plastic	7700P
7700 7500	Metal	7700M
J7700 J7500	Metal	J7700M x Hand

Steel Door Application

Sex Nut/Sleeve Nut: "SN" (4 per pack)
or
Sex Nut/Sleeve Nut & Screw: "SNB" (4 per pack)

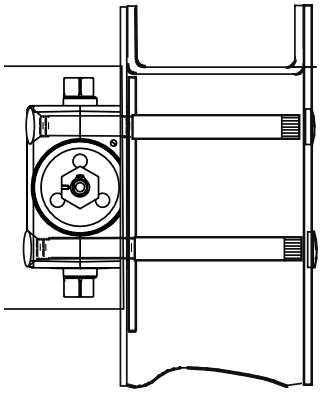

Door Thickness	SN's	SNB's
1-3/8"	SN-138	SNB138-47
1-3/4"	SN-134	SNB134-47
2-1/4"	SN-214	SNB214-47
S.S. SNB'S 1-3/4" (Stainless Steel)	SN-134SS	SNB134SS-47

Aluminum and Wood Door Application (Aluminum Door Shown)

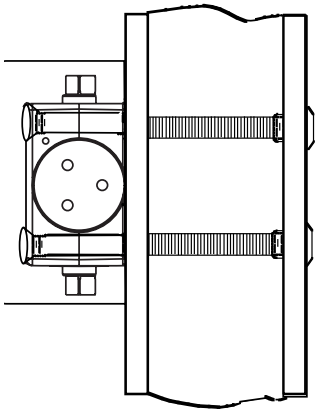

Through-Bolt & Grommet Nut: "TBGN" (4 per pack)

Door Thickness	TBGN's
1-3/8"	TBGN138-47
1-3/4"	TBGN134-47

Norton®

NON-HOLD OPEN ARM ASSEMBLIES

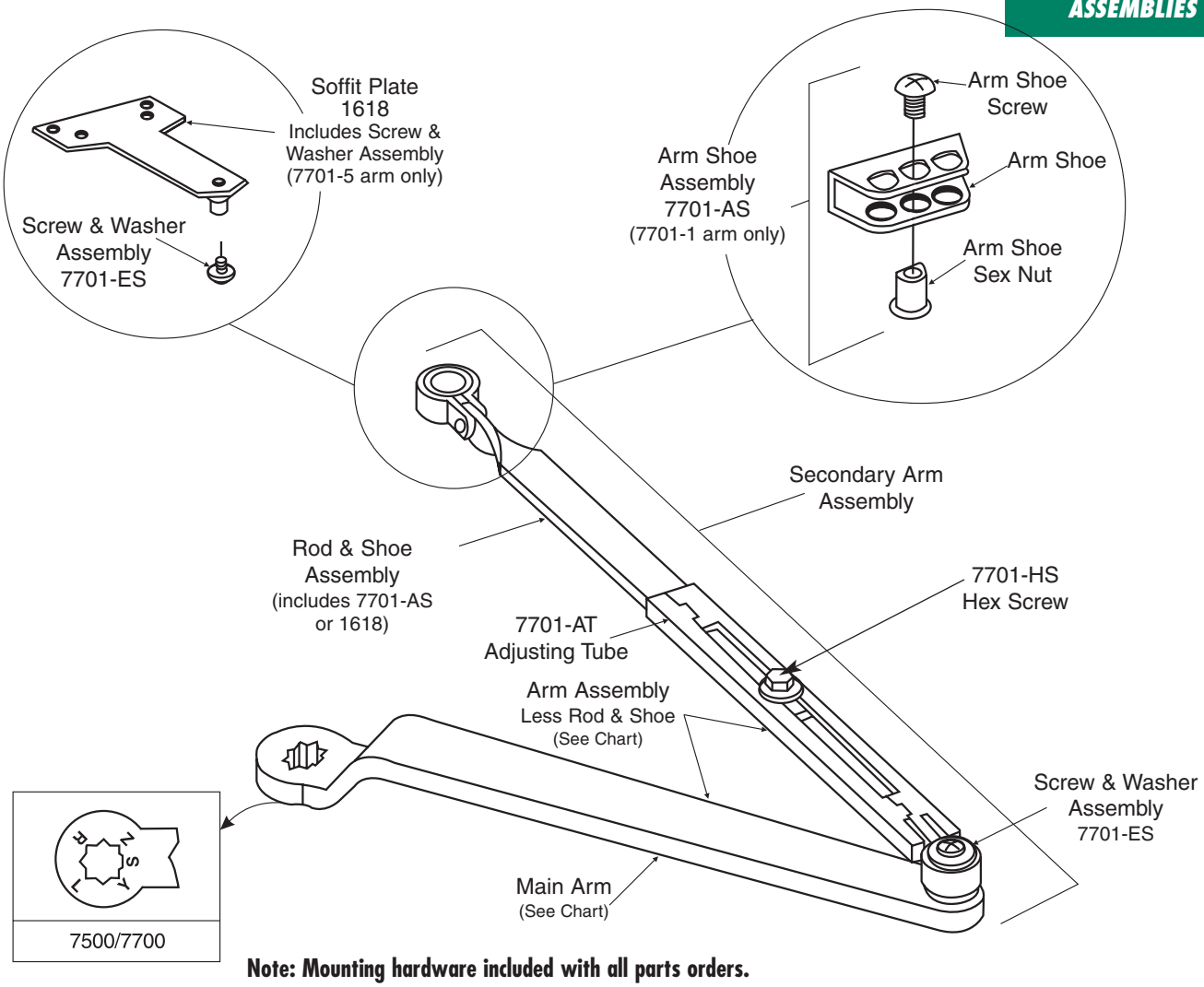

Note: Mounting hardware included with all parts orders.

Closer Series	Complete Arm Assembly	Main Arm Assembly[1] (length)(mm) (includes 7701-ES)	Secondary Arm Assembly (includes 7701-ES)	Arm Assembly Less Rod and Shoe	Rod & Shoe Assembly[2] (length) (mm)
7500/7700	7701-1	7701-1M (11)(279)	7701-111	7701-1W	7701-11 (8-7/8)(225)
J7500/J7700	7701-1A		7701-121		7701-11A (12-9/16)(319)
JL7500/JL7700	7701-1B	7701-2M (13-1/2)(343)	7701-131	7701-2W	7701-11B (15-3/16)(386)
P7500/P7700	7701-5	7701-1M (11)(279)	7701-115		7701-15 (8-7/8)(225)
P7500/P7700[3]	7701-5A		7701-115A	7701-1W	7701-15A (12-9/16)(319)
7500	7701-25 (tri pack includes 7701-1 plus 1618 plate)	① C to C length shown in parentheses. ② C of connecting link to end of rod shown in parentheses. ③ For 180° door swing when using a special template for doors hung on 6" to 8" (152mm to 203mm) wide throw hinges.			

STAINLESS STEEL ARM ASSEMBLIES

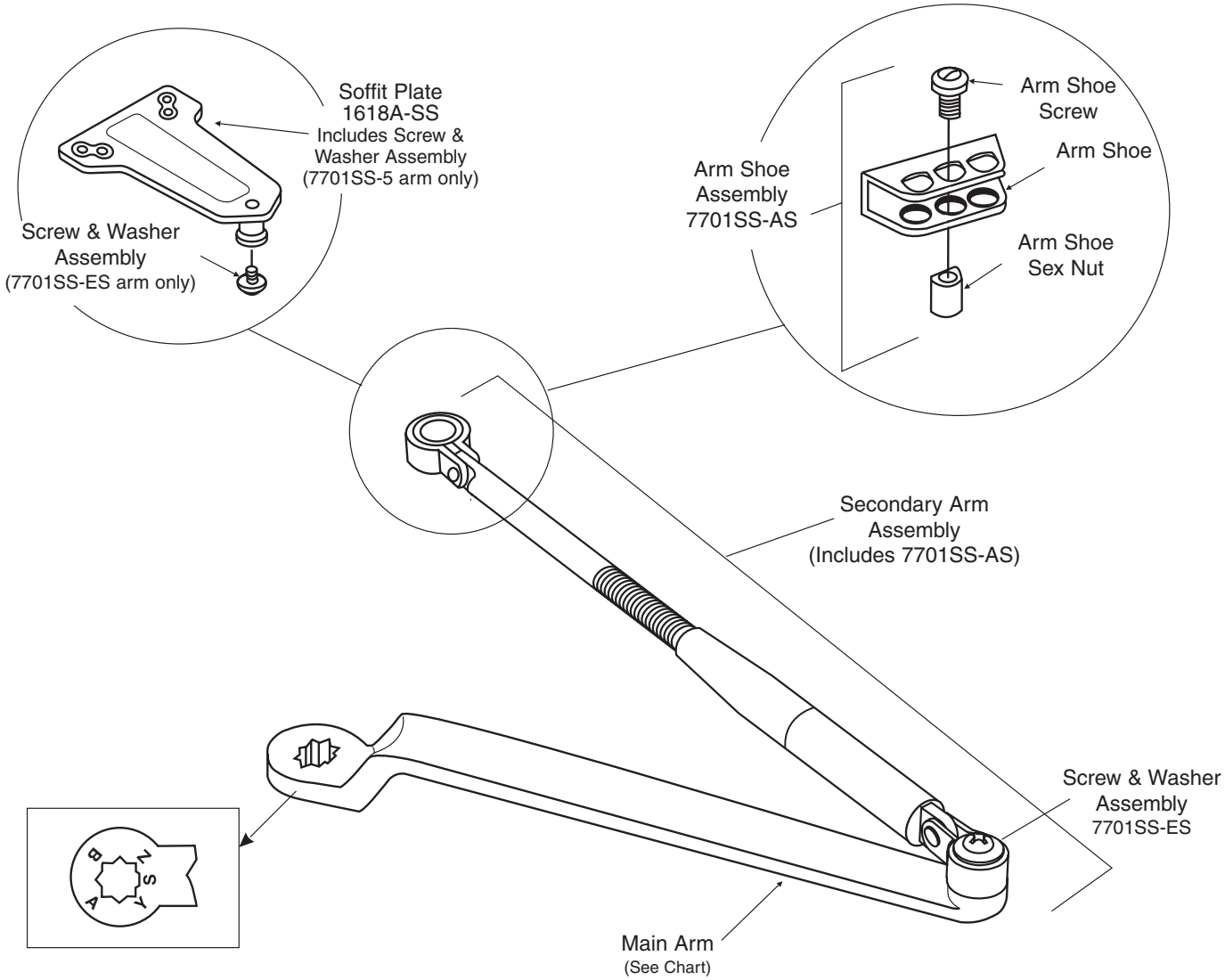

Closer Series	Complete Arm Assembly	Main Arm Assembly (length)(mm) (includes 7701SS-ES)	Secondary Arm Assembly (includes 7701SS-ES)
7500SS	7701SS-1	7701SS-1M (11)(279)	7701SS-111
J7500SS	7701SS-1A		7701SS-121
P7500SS	7701SS-5		7701SS-115

Note: Mounting hardware included with all parts orders.

① C to C length shown in parentheses

HOLD OPEN ARM ASSEMBLIES

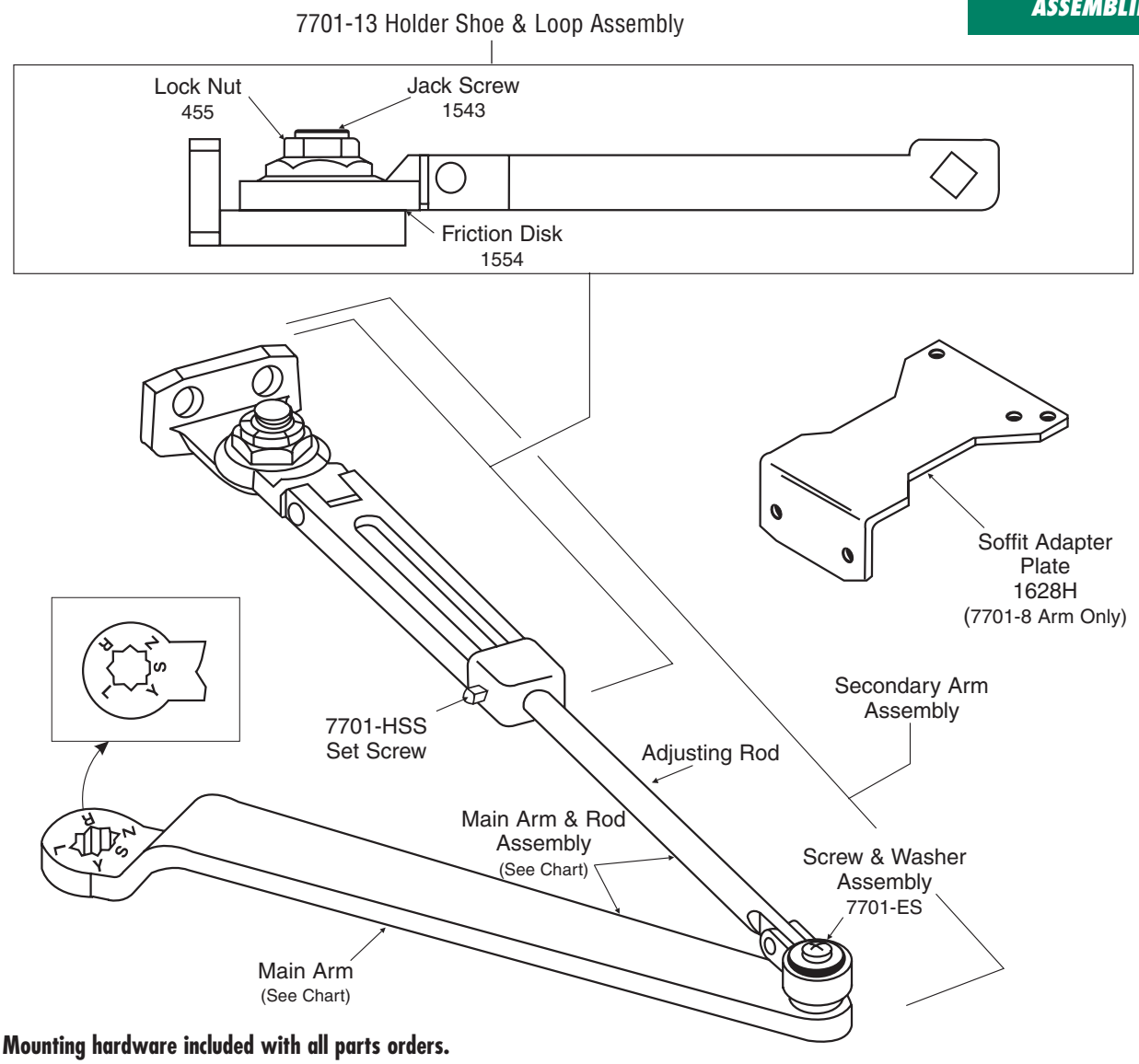

Note: Mounting hardware included with all parts orders.

Closer Series Assembly	Complete Arm Assembly	Main Arm[1] (Length)(mm) (includes 7701-ES)	Secondary Arm (includes 7701-ES)	Main Arm & Rod Assembly	Holder Shoe & Loop Assembly	Adjusting Rod[2] (Length)(mm)
7500H/7700H	7701-3/7701-8[3]	7701-1M (11)(279)	7701-113/7700-118 (Reg.) / (Par.)	7701-3W	7701-13	7701-31 (7-3/8)(187)
J7500H/J7700H	7701-3A		7701-123	7701-3WA		7701-31A (10-13/16)(275)
JL7500H/JL7700H	7701-3B	7701-2M (13 -1/2)(343)	7701-133	7701-3WB		7701-31B (12-7/8)(327)

① C to C length shown in parentheses.
② C of connecting link to end of rod shown in parentheses.
③ Same as 7701-3 but includes #1628H soffit adapter plate.

PARALLEL RIGID ARM ASSEMBLIES

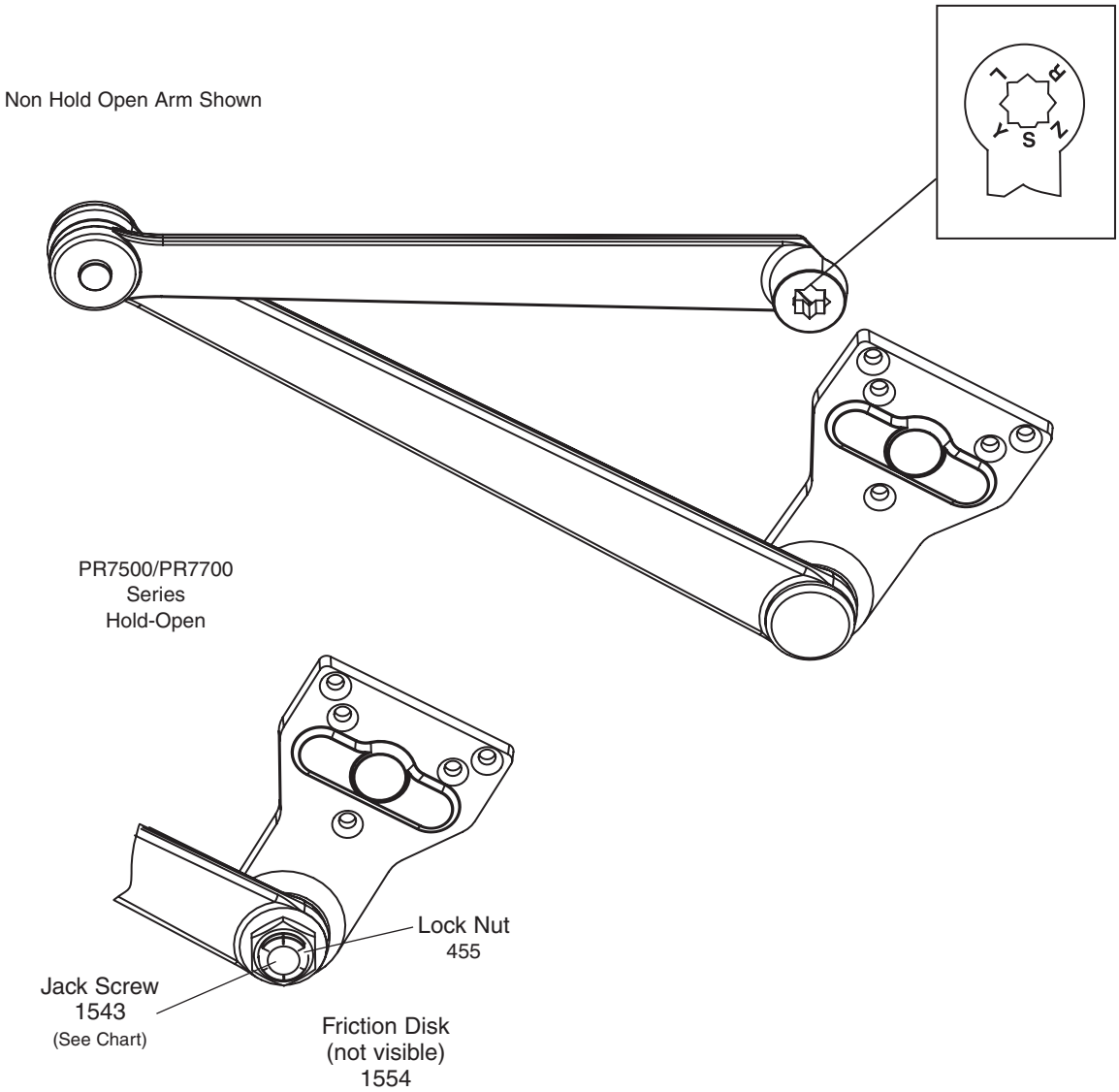

Closer Series PR7500/PR7700	Complete Arm Assembly	Jack Screw
NHO	PR7701-5	N/A
HO	PR7701-8R (Right Hand)	1543R
	PR7701-8L (Left Hand)	1543L

Note: Mounting hardware included with all parts orders.

Hold Open Arm Shown (CLP-T)

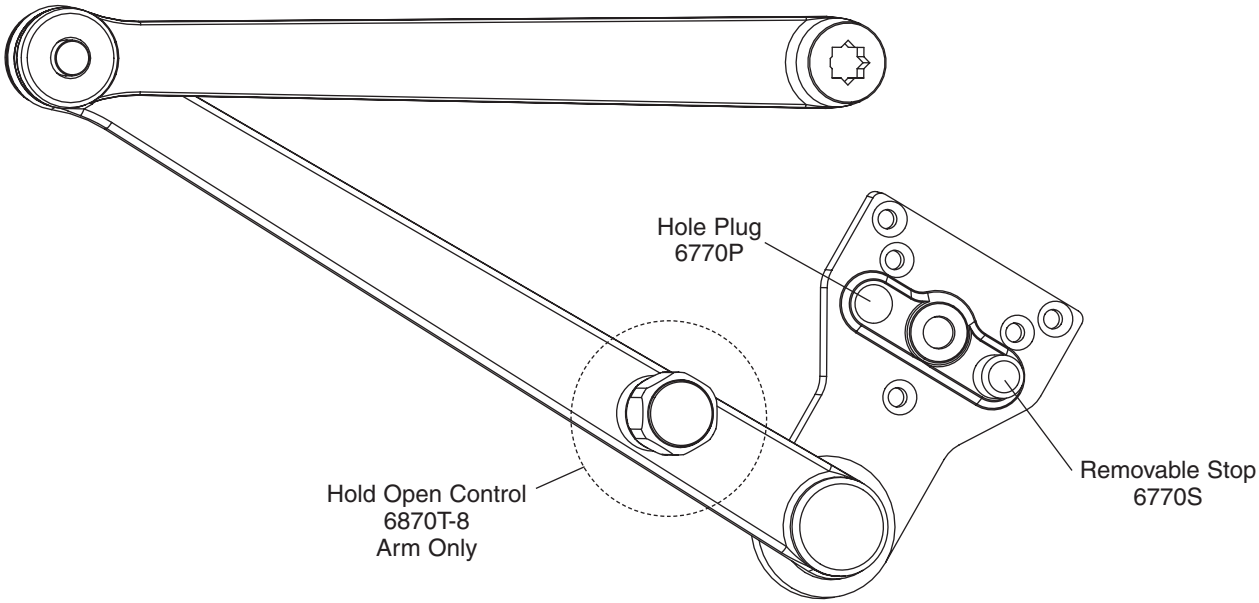

Note: Mounting hardware included with all parts orders.

Closer Series	Arm Function	Complete Arm Package
CLP7500 / CLP7700	Non Hold Open	6770-5
CLP7500T / CLP7700T	Thumbturn Hold Open	6870T-8

CLOSERPLUS SPRING™ ARM ASSEMBLIES

Non Hold Open Arm Shown

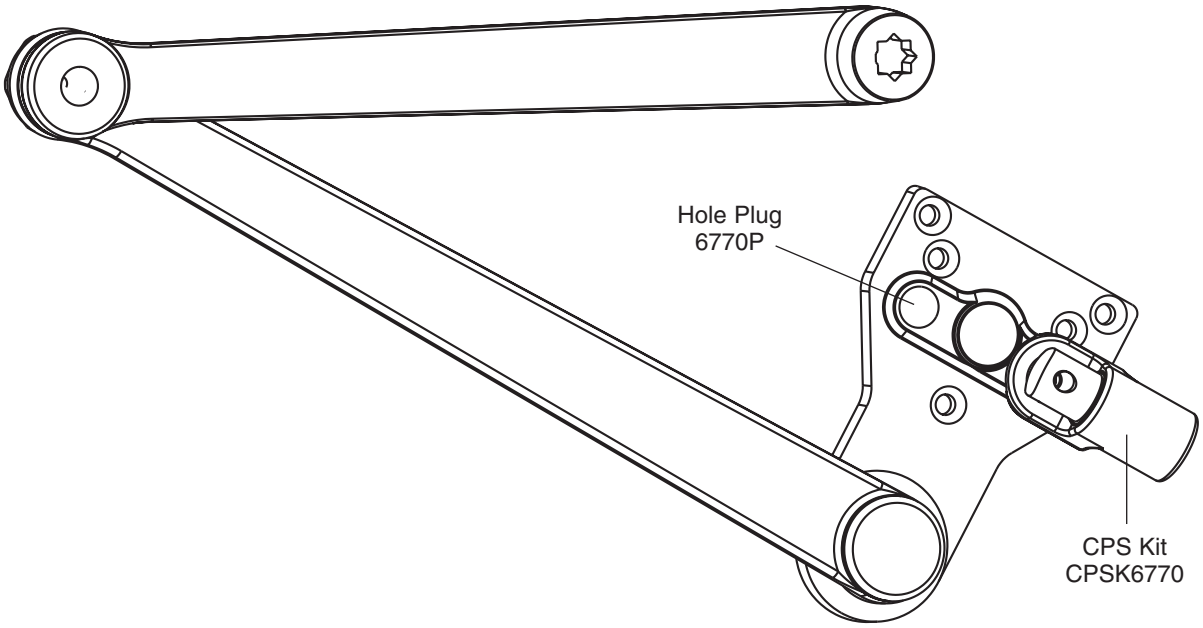

Note: Mounting hardware included with all parts orders.

Closer Series	Arm Function	Complete Arm Package
CPS7500 / CPS7700	Non Hold Open	CPS6770-5
CPS7500T / CPS7700T	Thumbturn Hold Open	CPS6870T-8

REGULAR RIGID HEAVY-DUTY ARM

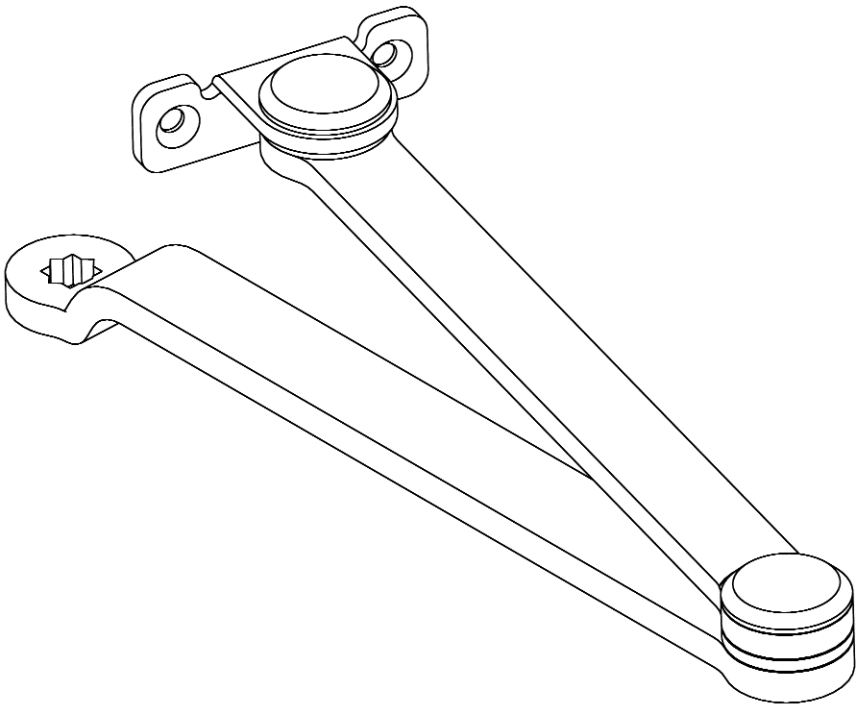

Note: Mounting hardware included with all parts orders.

Closer Series	Arm Function	Complete Arm Package
R7700 / R7500	Non-Hold Open	R7701-1 Furnished with standard fasteners
7770 / 7570*		7771-1 Furnished with Torx fasteners

*** Refer to Norton's Security Closer Catalog.**

UNITROL® ARM ASSEMBLIES

Parallel Arm Hold Open & Non Hold Open Series

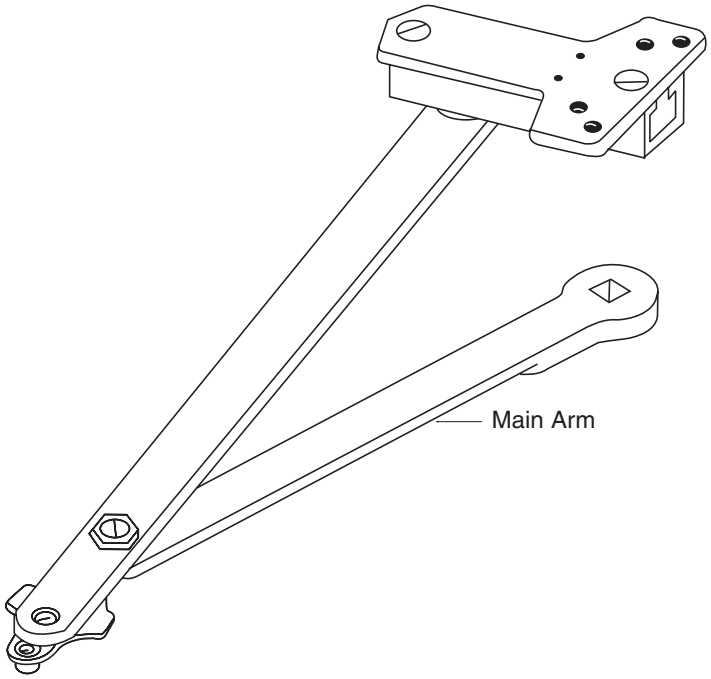

Non Hold Open

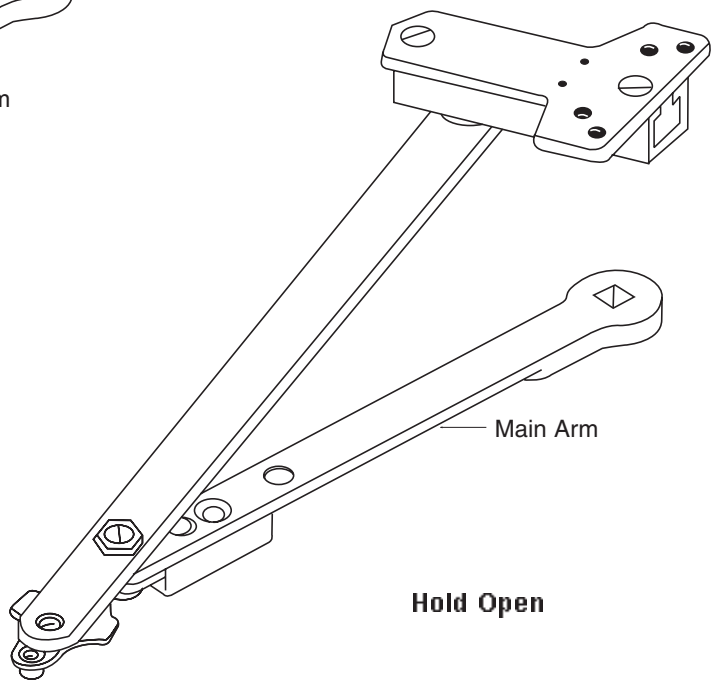

Hold Open

Door Width (cm)	Main Arm Length* (mm)	Complete Arm Assembly	
		Non Hold Open	Hold Open
28" - 32" (71- 81)	9-1/2" (241)	6100-11	6100-1
33"- 41" (84 - 104)	11" (279)	6100-13	6100-3
42" - 48" (107 - 122)	12-1/2" (318)	6100-14	6100-4

* Center to center length.

Note: Mounting hardware included with all parts orders.

Top Jamb Hold Open & Non Hold Open Series

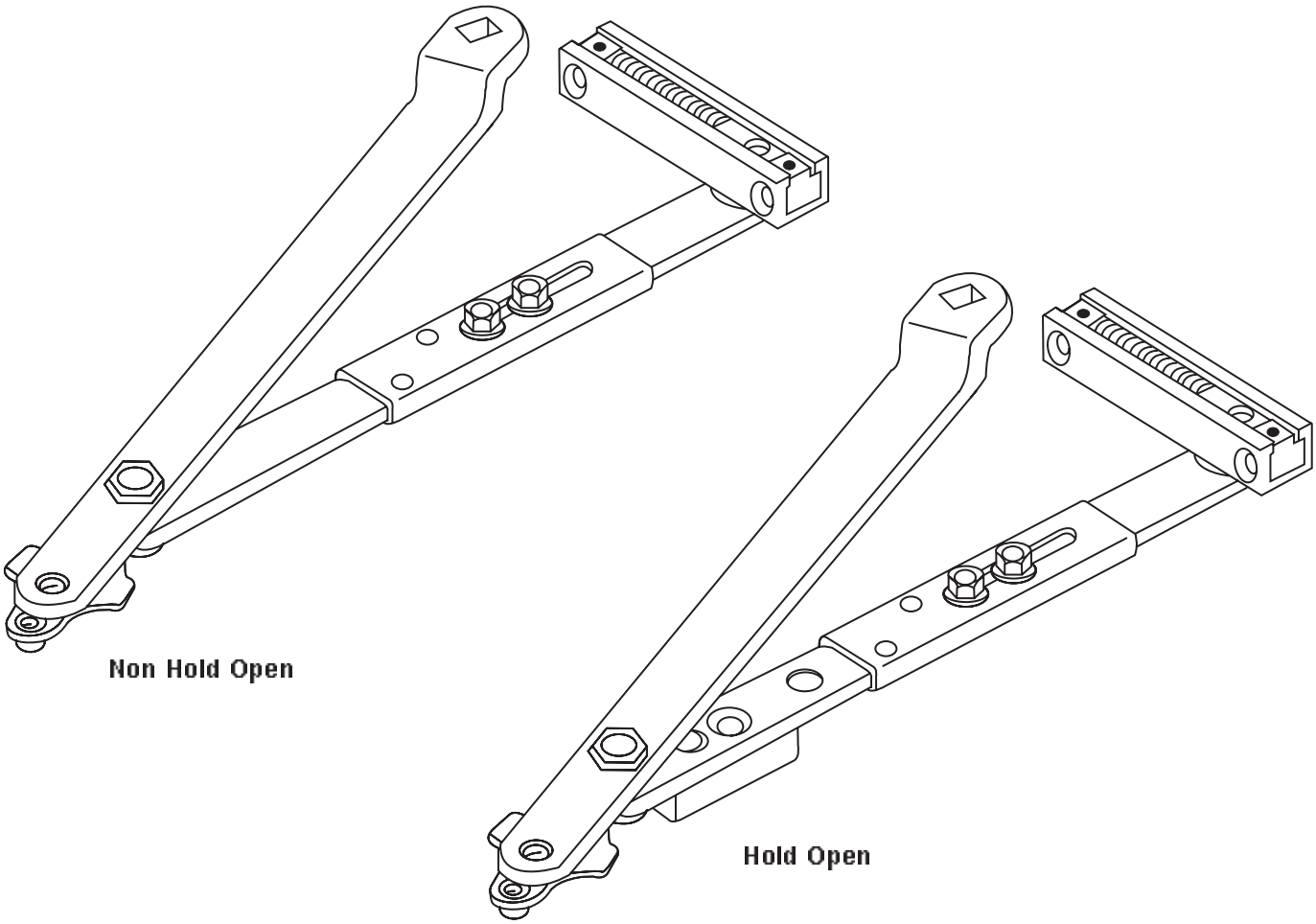

For Frame Reveals (mm)	Complete Arm Assembly	
	Non Hold Open	Hold Open
2-1/8" - 3-1/4" (54 - 83)	J6100-4	J6100-7
1/2" - 2" (13 - 51)	J6200-4	J6200-7
3-3/8" - 4-1/4" (86 - 108)	J6400-4	J6400-7
4-3/8" - 5-3/8" (111 - 137)	J6500-41	J6500-71
5-1/2" - 6-3/8" (140 - 162)	J6500-42	J6500-72
6-1/2" - 7-3/8" (165 - 187)	J6500-43	J6500-73
0" - 3/8" (0 - 10)	J6600-4	J6600-7

Note: Mounting hardware included with all parts orders.

LOW PROFILE ARM ASSEMBLIES

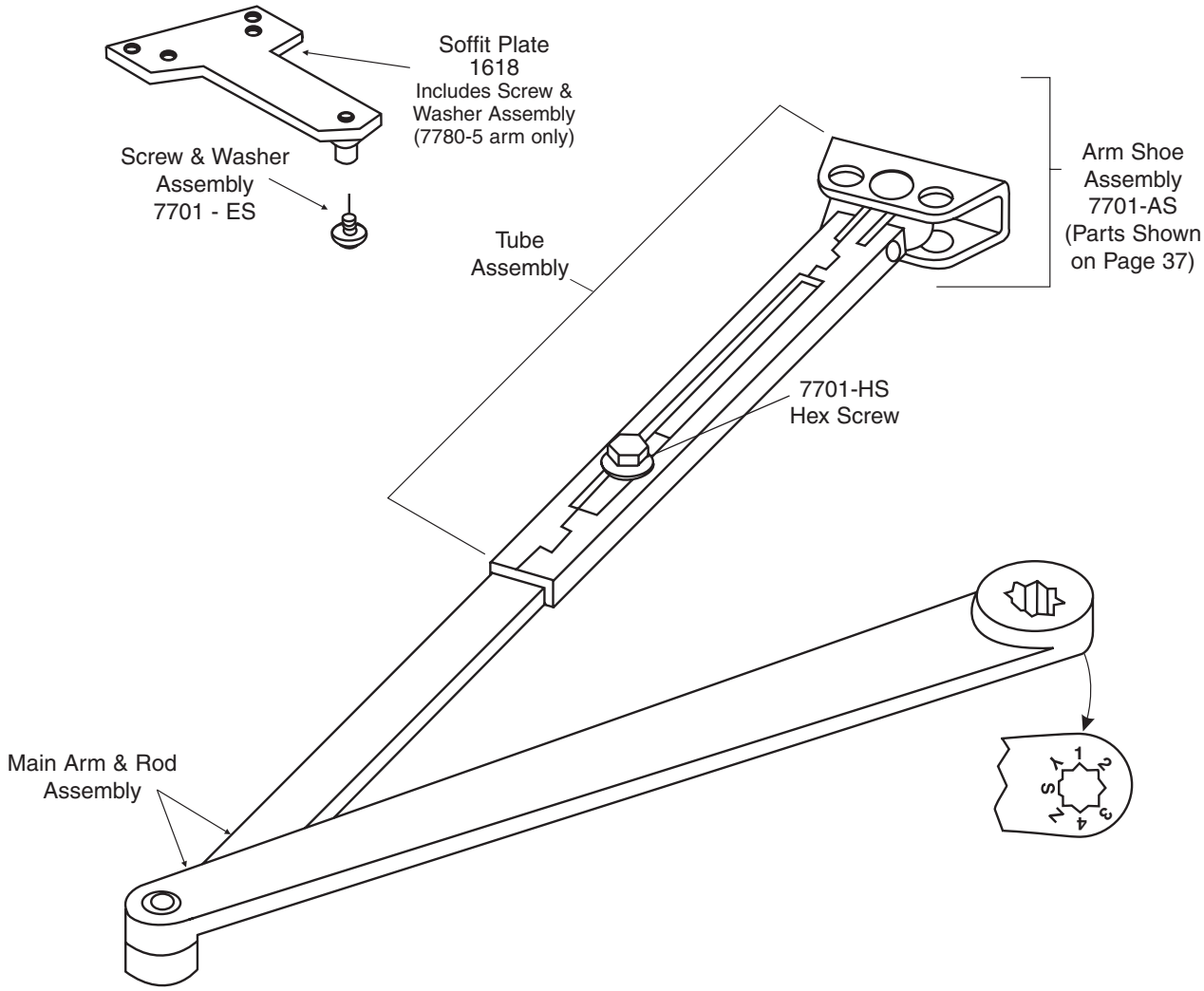

Arm Application	Complete Arm Assembly	Main Arm & Adjusting Rod Assembly	Tube & Shoe/Soffit Assembly
Regular Arm	7780-1	7780-1MR	7780-1TS (With 7701-AS)
Parallel Arm	7780-5		7780-5TS (With 1618)
Tri-pack	7780-25		

Note: Mounting hardware included with all parts orders.

Non Hold Open	
Model	**Slide Track Assembly**
Pull-side mounted	7701ST-1T
Push-side mounted	7701ST-5T
Pull-side mounted (180°)	7701ST-1T180[3]

Hold Open	
Model	**Slide Track Assembly**
Pull-side mounted	7701ST-3T
Push-side mounted	7701ST-8T

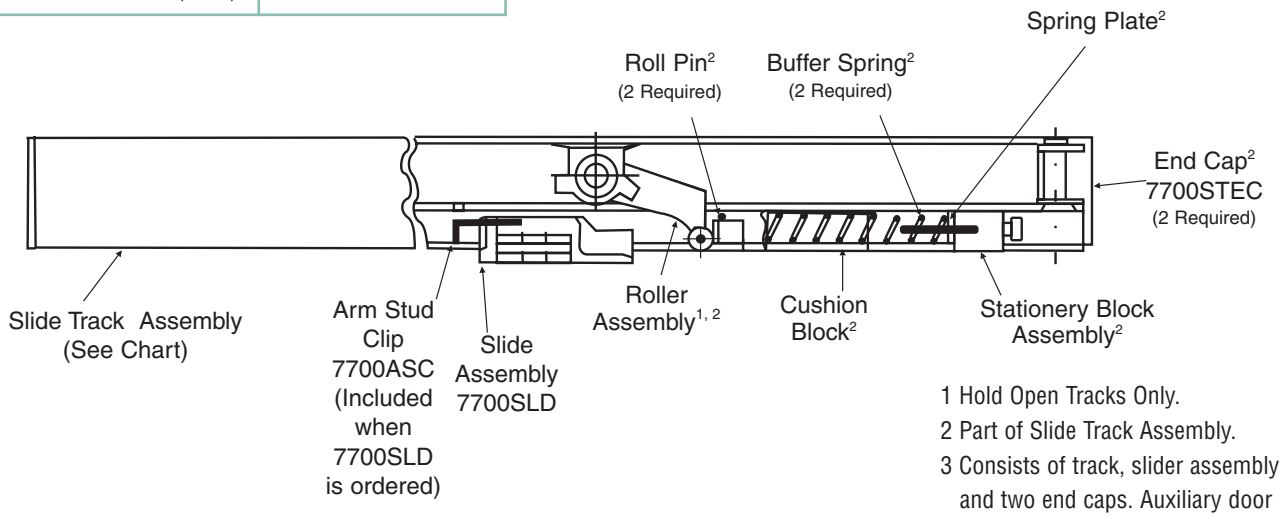

1 Hold Open Tracks Only.
2 Part of Slide Track Assembly.
3 Consists of track, slider assembly and two end caps. Auxiliary door stop required.

Note: Mounting hardware included with all parts orders

TRACK ASSEMBLIES 7700/7500ST & STP

STANDARD ARM ASSEMBLY

7701ST-1A[1,2]

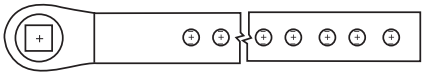

Arm Tube Assembly
7701ST-1AT [1]

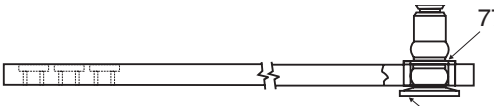

Adjusting Rod Assembly
7701ST-1AR[1]

DOUBLE EGRESS ARM ASSEMBLY

7701PT-DE-1R (Right Hand)[1, 2]
7701PT-DE-1L (Left Hand)[1, 2]

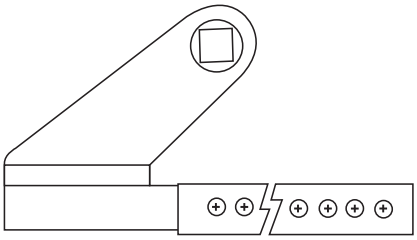

Arm Tube Assembly
7701ST-1ATR[1] (right hand)
7701ST-1ATL[1] (left hand)

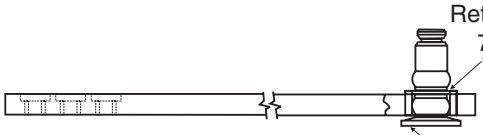

Adjusting Rod Assembly
7701ST-1AR[1]

STP ARM ASSEMBLY

7701STP-1A[1,2]

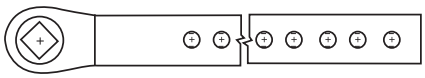

Arm Tube Assembly
7701STP-1AT[1]

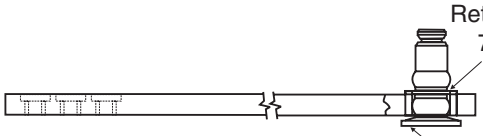

Adjusting Rod Assembly
7701ST-1AR[1]

1 Includes arm length adjusting screw #7700ALAS
2 Includes arm tube & adjusting rod assembly

Note: Mounting hardware included with all parts orders.

Norton®

TRACK ASSEMBLIES 7740/7540ST

Non Hold Open	
Model	**Slide Track Assembly**
Pull-side mounted	7740ST-1T
Push-side mounted	7740ST-5T

Hold Open	
Model	**Slide Track Assembly**
Pull-side mounted	7740ST-3T
Push-side mounted	7740ST-8T

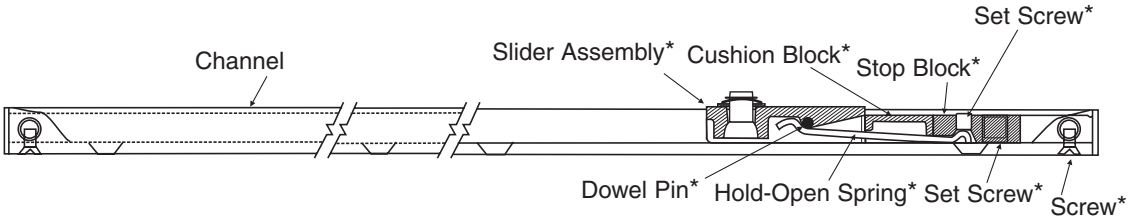

*Part of an Assembly Pack
NHO= 7740SLD
HO= 7740HSLD

ARM ASSEMBLY
7740ST-1A[1, 2]

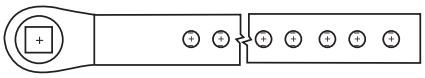

Arm Tube Assembly
7701ST-1AT [2]

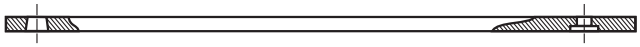

Adjusting Rod Assembly
7740ST-1AR [2]

1 Includes arm length adjusting screw.
2 Includes arm tube & adjusting rod assembly.

Note: Mounting hardware included with all parts orders.

NOTES

NOTES

Norton®

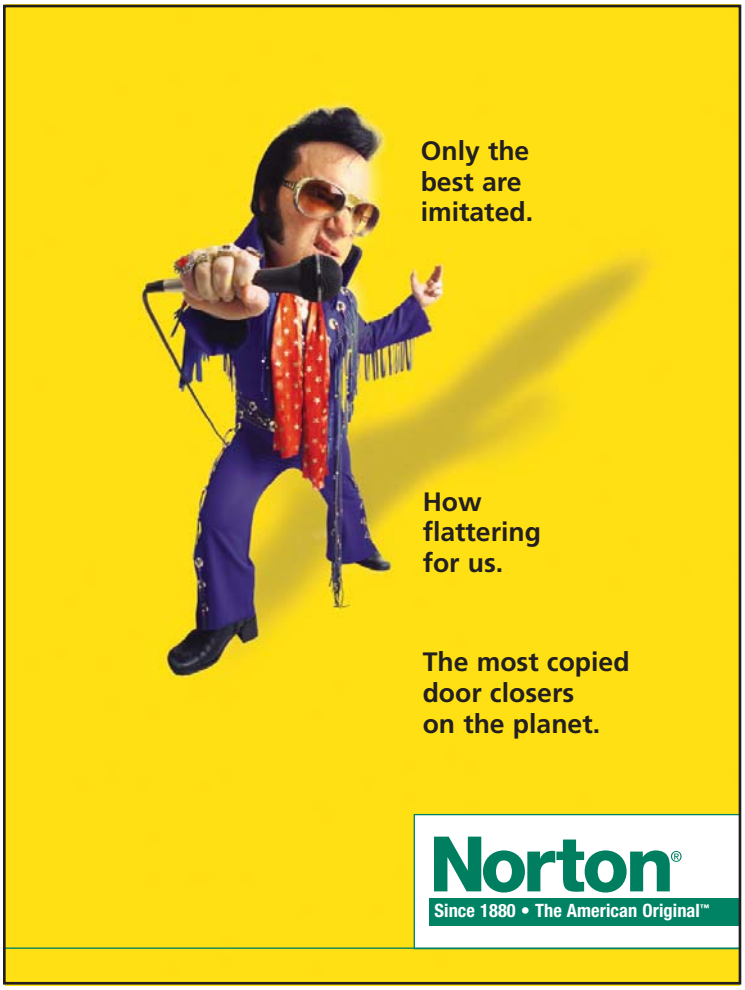

Norton Door Controls
1902 Airport Road
Monroe, NC 28110
Telephone: 1.800.438.1951
Fax: 1.800.338.0965

Yale-Corbin Canada Ltd
6940 Edwards Boulevard
Mississauga, Ontario, Canada L5T 2W2
Telephone: 1.800.461.3007
Fax: 1.800.461.8989

For a complete listing of products and applications please visit our web site.
www.nortondoorcontrols.com
www.yalecorbin.on.ca

Norton® closers...still proudly manufactured in the United States with more than 75% U.S. content.

Norton®, Tri-Style®, NorGlide®, UniTrol®, CloserPlus Spring™ and CloserPlus® are registered trademarks of Yale Security Inc. These materials are protected under U.S. copyright laws. All contents current at time of publication. Yale Security Inc. reserves the right to change availability of any item in this catalog, its design, construction, and/or its materials. Other products brand names may be trademarks or registered trademarks of their respective owners and are mentioned for reference purposes only. Copyright© 2001, 2005, Yale Security Inc. All rights reserved.

The ASSA ABLOY Group is the world's leading manufacturer and supplier of locking solutions, dedicated to satisfying end-user needs for security, safety and convenience.

An ASSA ABLOY Group company

ASSA ABLOY

43095-HP-10.0-3/05R