SINCE 1880

Norton®

THE AMERICAN ORIGINAL

6900

PowerMatic® Low Energy Power Operator

Complies with A.D.A. Accessibility Guidelines

An ASSA ABLOY Group company

ASSA ABLOY

INTRODUCTION

Norton's 6900 PowerMatic® is a “low energy” power door operator designed to automatically open and close doors with a lower energy opening force. Unlike high energy operators that require guide rails, safety mats and sensors, low energy operators only require signage.

The *PowerMatic* is easy to adjust, available for push or pull side mounting and offers obstruction detection during both opening and closing cycles.This operator is ideal for executive offices, retirement homes, educational and assisted living facilities, office/warehouse corridor doors, etc.

TABLE OF CONTENTS

Overview, Functions 3
Guide, Features, Electrical Data, Certifications 4
How to Order 5
Standard Applications 6-7
Drop Applications 8-9
Typical System Applications 10-11
Architectural Specifications 12
Technical Details 13-14
Operational Signs 15
Accessories 15-16
Parts List 17

OVERVIEW

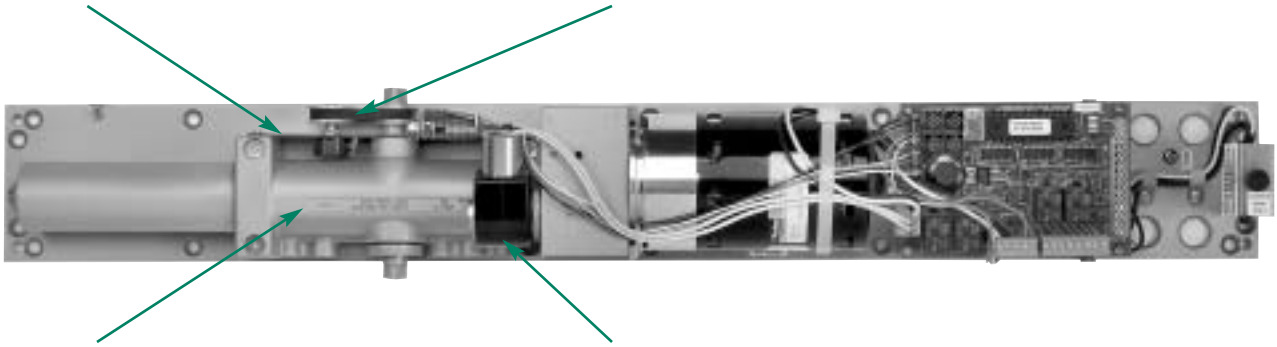

FUNCTIONS

Norton's PowerMatic fully complies with ADA requirements and is BHMA/ANSI A156.19 certified. The unit functions using an A/C motor and hydraulic pump to activate a heavy duty hydraulic door closer controlled by an Electronic Control Module (ECM) board. The *PowerMatic* is an excellent choice in a low energy power door operator with its:

- Ease of installation and setup
  - Simple instructions
  - Uses push-button settings for door open and door close positions
- Application versatility and ease of adjustment
  - Handed units
  - Push or pull side mounting
  - Interfaces with electric hardware and integrates with access control systems
- Operates as mechanical surface closer during close cycles or if power is turned off
  - Critical for fire rated doors
  - Springs force provides the feel of a normal manual door closer
  - Door can be opened manually if desired
- Operation startup options
  - Wall switches
  - Motion sensor
  - Radio frequency device
  - Push and Go
- Hold Open options
  - 0-30 seconds (5 seconds minimum required for ADA and ANSI A156.19)
  - Choice of infinite hold open features
- Obstruction Detection
  - Door closes if it hits an obstruction while opening
  - Door re-opens once if it hits an obstruction while closing
- Power Operator
  - When unit is activated door travels to open position
- Power Assist
  - When unit is activated, pump and motor allow door to be manually opened with a force less than 5 lbs.

GUIDE

Operator Type	Safety Equipment Required to be BHMA Compliant	Common Applications
Low Energy	Signage (included with unit)	(LOW TO MODERATE TRAFFIC) Executive Offices, ADA Dorm Rooms, ADA Hotels, Retirement Homes, Educational or Assisted Living Facilities, Office/Warehouse Corridor Doors, ADA Auxiliary Entrances, ADA Accessible Restrooms, Fire Doors
High Energy	Guide Rails, Safety Mats, Sensors & Signage	(HIGH TRAFFIC) Hospital Emergency Entrances & Operating Rooms, Airport Entrances, Large Office Building or Department Store Entrances

FEATURES

- *Norton* 7500 series door closer
  - ❑ Adjustable spring power
  - ❑ Backcheck valve
  - ❑ Backcheck position valve
  - ❑ Sweep valve
  - ❑ Latch valve
  - ❑ Speed control valve
  - ❑ Pressure adjustment valve
- Left or right hand
- Drop plate for low ceiling applications
- Push side or pull side applications
- Power Assist selector switch
- Push and Go selector switch
- Open/close obstruction detection
- Motor startup delay adjustment
- Vestibule function delay adjustment (For sequencing two or more units)
- Door hold open delay adjustment
- Single Pole Double Throw (SPDT) relay output
- SPDT relay output time adjustment
- SPDT alarm output
- Blow open function for smoke ventilation
- Infinite hold open function
- Presence detector Input
- 24 VDC @ .5A output
- Selector mode switch (3 position)
  - ❑ OFF – Disables signal inputs except blow open. Unit still powered.
  - ❑ ON – Activates signal inputs for normal use
  - ❑ HOLD OPEN – Activates the unit to the hold open position indefinitely

ELECTRICAL DATA

- Power Input 120 VAC, 60 Hz (+10%, -15%)
- Current Draw 1.5A
- Auxiliary Output 24 VDC @ .5A
- SPDT relay output for controlling electric strikes or electric locks not to exceed 1 amp @ 30 VDC

CERTIFICATIONS

- C-UL US listed for use on fire and smoke barrier doors
- Meets requirements for UL10C and UBC 7.2 for positive pressure
- 2-year warranty (refer to current price list, terms and conditions)
- Americans with Disabilities Act (ADA)
- BHMA certified A156.19 for Low Energy and Power Assist operated doors

SINCE 1880 Norton® THE AMERICAN ORIGINAL

HOW TO ORDER

Note: All transmitters (door switches or key fob) must be ordered separately.

69	2	0	HAND	SUFFIX	X FINISH

- L= Left hand
- R= Right hand

FIRST TWO DIGITS
Product Series
PowerMatic

FOURTH DIGIT
Closer Power Size
0 – Adjustable for sizes 1 thru 6
2 – Auxiliary closing mechanism required

SUFFIXES (options)
RF1 – Radio Frequency Control
- Factory Wired
- Requires 574, 576 door switch or 577 switch post (433MHz)

D – Drop Application for less than 5" minimum ceiling clearance.

FINISHES
Product will be sprayed with a combination of waterborne acrylic and polyester powder coat.

THIRD DIGIT
Identifies Type of Application

HINGE (PULL) SIDE OF DOOR*

1 – Rigid Arm & Slide Track
110° Maximum Door Swing
Maximum Reveal 1/8" (3mm)

5 – Double Egress Arm & Slide Track
110° Maximum Door Swing for
Reveals 1/8" to 3" (3 to 76mm)
(Specify hand when ordering)

STOP (PUSH) SIDE OF DOOR

2 – Standard Duty Double Lever Arm
110° Maximum Door Swing
Reveals 2-3/4" to 6-7/8" (70 to 175mm)

†**3** – Standard Duty Double Lever Arm
180° Maximum Door Swing
Reveals 2-3/4" to 6-7/8" (70 to 175mm)

††**6** – Heavy Duty Double Lever Arm
110° Maximum Door Swing Reveals
2-1/4" to 4-3/4" (57 to 121mm)

7 – Heavy Duty Double Lever Arm
110° Maximum Door Swing Reveals
4-13/16" to 7-3/8" (122 to 187mm)

Description	Specify *Norton* Designation (BHMA)	Complements the following finishes	Old Designation
Aluminum	689	628, 625, 629, 630, 651, 625	AL
Statuary Bronze	690	640, 613	STAT
Dull Bronze	691	612, 637, 639	DB
Black	693	315	315
Medium Amber	694	312	312
Gold	696	605, 606, 632, 633	GB
Prime Coat*	600		SRI

* Special rust inhibitor (Beige) available at extra cost. Closers can be ordered prime coated only, i.e. (SRI) or prime coated with finish, i.e. SRI x 690. Finishes other than those listed above may be available on special order. Sample chips will be required.

† Models will be power operated to 110° but can be manually opened to 180°
†† Reveals less than 2-1/4" (57mm) may be achieved by field cutting the adjusting rod
* Consult Technical Support Department when door is hung on offset pivots

For application assistance, Norton offers complete services from specifying product to engineering a door system which includes riser and wiring diagrams. Consult Norton Technical Product Support for additional information.

STANDARD APPLICATIONS

LH Shown

6910/6950

HINGE (PULL) SIDE OF DOOR

- Spring buffered stop assembly in slide track

6910 RIGID ARM AND SLIDE TRACK

- 85° to 110° templated door openings in 5° increments
- 1/8" (3mm) maximum frame reveal

6950 DOUBLE EGRESS ARM AND SLIDE TRACK

- From 1/8" to 3" (3 to 76mm) frame reveal
- Specify hand when ordering

An auxiliary stop is suggested where severe conditions exist.

LH Shown

6920/6930

STOP (PUSH) SIDE OF DOOR

STANDARD DUTY DOUBLE LEVER ARM

- Frame reveals 2-3/4" to 6-7/8" (70 to 175mm)
- An auxiliary door stop is required for these applications

SERIES	DOOR OPENING
6920	Up to 110°
6930	From 110° to 180°

LH Shown

6960/6970

STOP (PUSH) SIDE OF DOOR

HEAVY DUTY DOUBLE LEVER ARM

- Maximum frame reveals (see chart)
- 85° to 110° templated door openings in 5° increments
- Spring buffered stop in arm shoe assembly

SERIES	REVEAL RANGE	
6960	2-1/4" to 4-3/4"*	(57 to 121mm)*
6970	4-13/16" to 7-3/8"	(122 to 187mm)

*** Reveals less than 2-1/4" (57mm) may be achieved by field cutting the adjusting rod**

NOTE: Contact factory for use on doors exceeding 250 lbs.

SINCE 1880 Norton® THE AMERICAN ORIGINAL

STANDARD APPLICATIONS

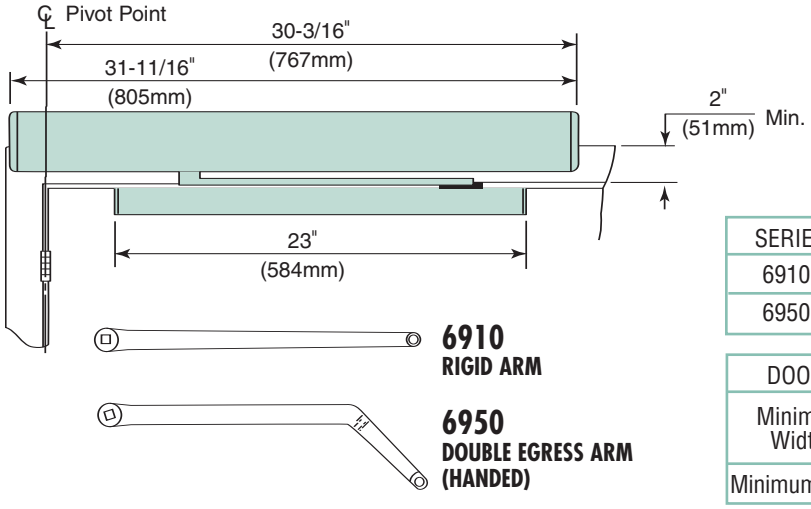

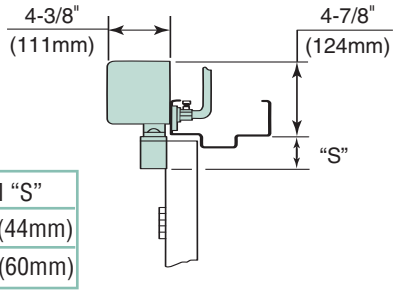

SERIES	DIM "S"
6910	1-3/4" (44mm)
6950	2-3/8" (60mm)

DOOR SWING	85°	90°	95°	100°	105°	110°
Minimum Door Width (mm)	32" (813)	31" (787)	30" (762)	30" (762)	29" (737)	29" (737)

Minimum door width for all double egress applications is 29" (737mm).

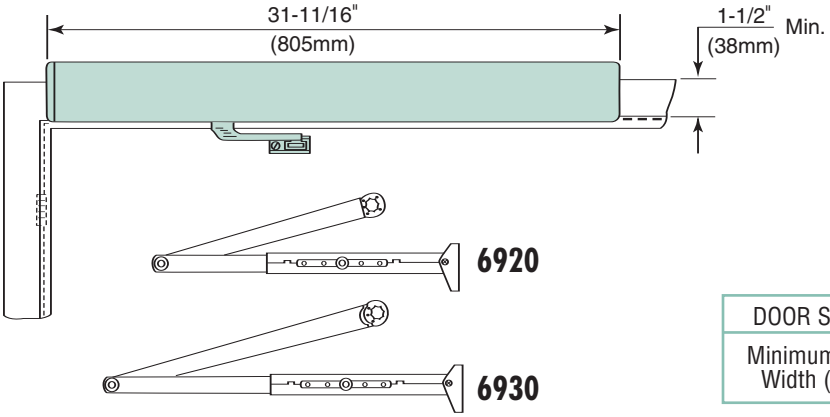

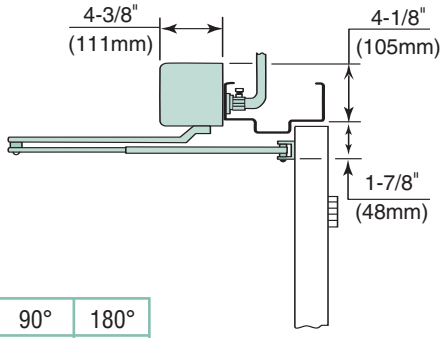

DOOR SWING	90°	180°
Minimum Door Width (mm)	32" (813)	29" (737)

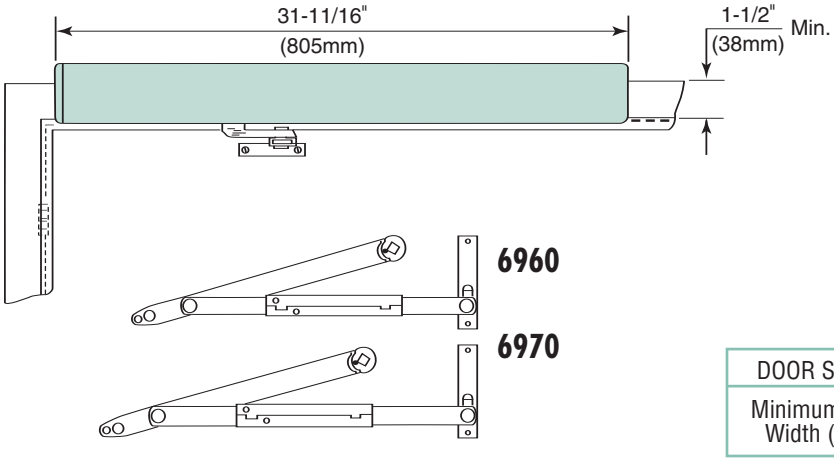

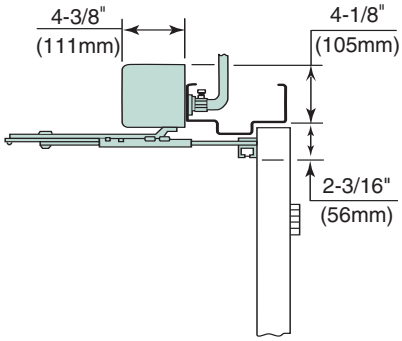

DOOR SWING	85°	90°	95°	100°	105°	110°
Minimum Door Width (mm)	34" (864)	33" (838)	33" (838)	32" (813)	32" (813)	31" (787)

DROP APPLICATIONS

NOTE: Drop application for less than 5" minimum ceiling clearance.

LH Shown

6920-D

STOP (PUSH) SIDE OF DOOR – UP TO 110° DOOR OPENING
STANDARD DUTY DOUBLE LEVER ARM

- Frame reveals 2-3/4" to 6-7/8" (70 to 175mm)
- 110° maximum door opening. See 6930-D for openings to 180°
- Auxiliary door stop is required for this application
- Minimum door width is 33" (84cm)

LH Shown

6930-D

STOP (PUSH) SIDE OF DOOR – OVER 110° TO 180° DOOR OPENING
STANDARD DUTY DOUBLE LEVER ARM

- Frame reveals 2-3/4" to 6-7/8" (70 to 175mm)
- Over 110° to 180°
- Auxiliary door stop is required for this application
- Minimum door width is 31" (79cm)

LH Shown

6960-D/6970-D

STOP (PUSH) SIDE OF DOOR
HEAVY DUTY DOUBLE LEVER ARM

- Maximum frame reveals (see chart)
- 85° to 110° templated door openings in 5° increments
- Spring buffered stop assembly in arm shoe

SERIES	REVEAL RANGE	
6960D	2-1/4" to 4-3/4"*	(57 to 121mm)*
6970D	4-13/16" to 7-3/8"	(122 to 187mm)

*** Reveals less than 2-1/4" (57mm) may be achieved by field cutting the adjusting rod**

NOTE: Contact factory for use on doors exceeding 250 lbs.

SINCE 1880 Norton® THE AMERICAN ORIGINAL

DROP APPLICATIONS

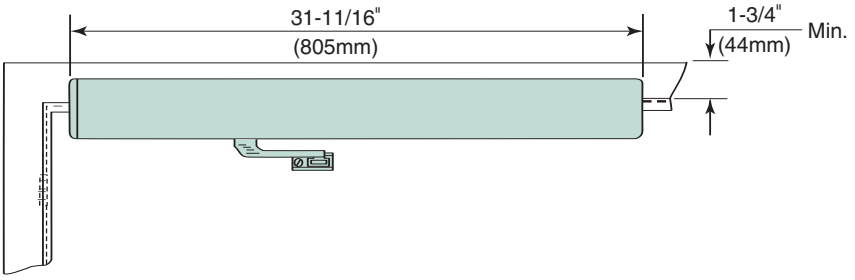

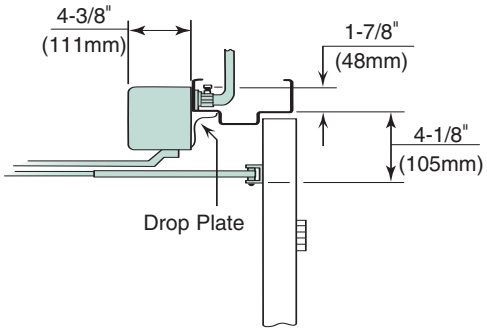

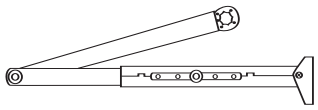

6920
110° Maximum Door Opening
Minimum Door Width 33" (84cm)

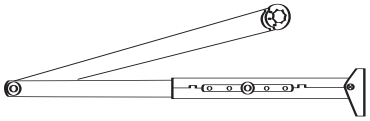

6930
Over 110° to 180° Door Opening
Minimum Door Width 31" (79cm)

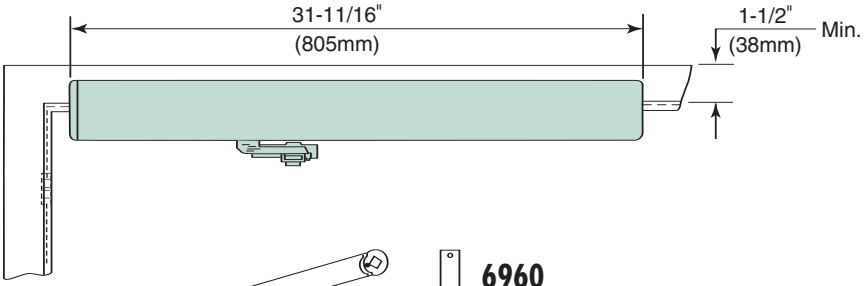

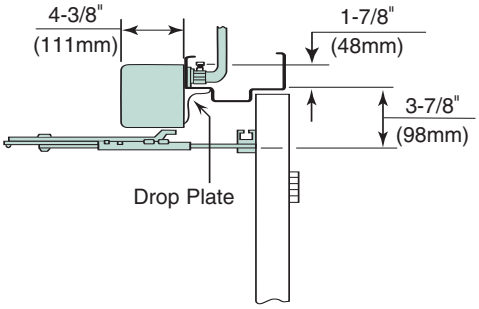

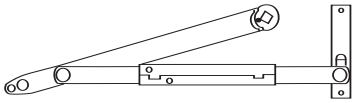

6960

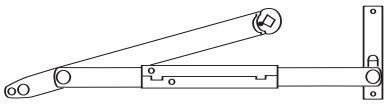

6970

DOOR SWING	85°	90°	95°	100°	105°	110°
Minimum Door Width (mm)	36" (914)	35" (889)	34" (864)	34" (864)	33" (838)	33" (838)

TYPICAL SYSTEM APPLICATIONS

6900 *POWERMATIC* WITH MAGNETIC LOCK

Opening Description: Fail Safe ADA Opening – Magnetic Lock & Door Operator

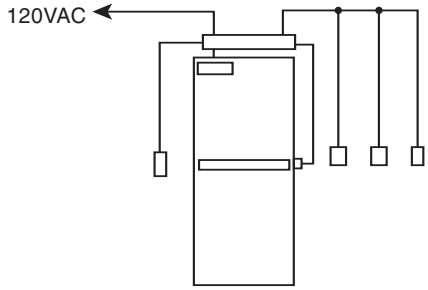

Application
Non-Fire Rated Glass Door - Interior or Exterior Office or Main Entrance Openings

Operation
- Lock or unlock system by a key control switch at all times.
- Free ingress & egress using the door operator or manually when unlocked.
- Outside door switch will be inactive, denying ingress other than by card when locked.
- To exit, inside door switch will unlock magnetic lock and open the door or manually push bar to exit.
- Door operator acts as standard door closer when entering or exiting manually.

Material
Door Operator • Electromagnetic Lock • Electrified Pivot • Mechanical Touch Bar with Switch • 2 Door Switches • Maintained Key Switch • Card Reader

6900 *POWERMATIC* WITH ELECTRIC STRIKES

Opening Description: Fail Secure ADA Opening – Double Electric Strike & Door Operators on Pair of Doors

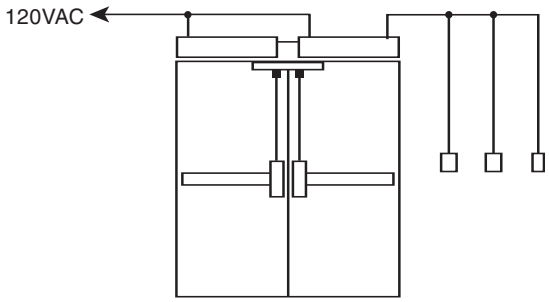

Application
Interior, Non-Fire Rated Wood or Metal Doors – Corridor or Emergency Room Openings

Operation
- Doors are to be closed and latched at all times.
- Key switch activates and deactivates door switches to signal door operators.
- Active door switch will energize the electric strike and automatically open doors.
- Access manually from the push side only when door switches are inactive.
- Door operators will act as standard door closers when door switches are inactive.

Material
2 Door Operators • Double Electric Strike • 2 Surface Vertical Rod Exit Devices • 2 Door Switches • Maintained Key Switch

6900 *POWERMATIC* WITH VESTIBULE

Opening Description: Vestibule – Two Single Doors & Operators

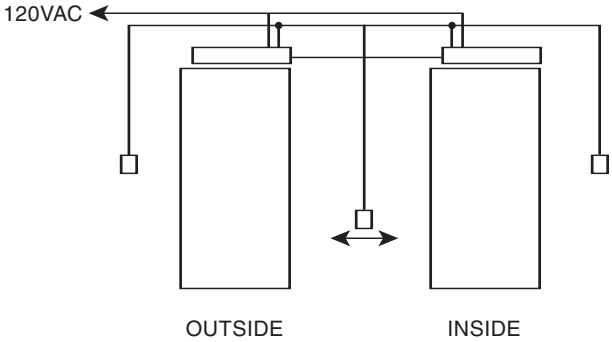

Application
Interior or Exterior Non-Rated Glass, Wood or Metal Doors – Hospitals, College Dorms, Hotels and other Public Buildings

Operation
- Doors are closed but not latched at all times when not activated.
- 2 door switches outside of vestibule operate closest door first, then second door.
- 2 door switches inside vestibule operate closest door only.

Material
2 Door Operators • 4 Door Switches

6900 *POWERMATIC* WITH VESTIBULE (TWO PAIR)

Opening Description: Vestibule – Two Pairs of Doors & Operators

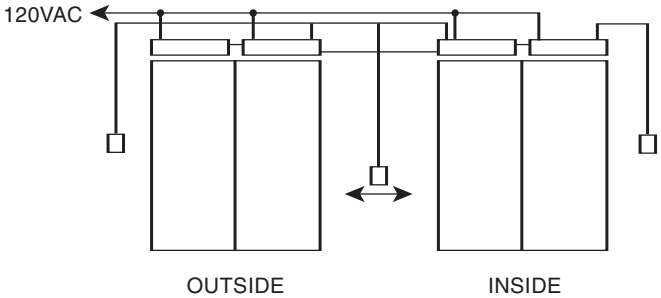

Application
Exterior Non-Rated Glass Doors – Hospitals, College Dorms, Large Hotels, Convention Centers and other Public Buildings

Operation
- Doors are closed but not latched at all times when not activated.
- 2 door switches outside of vestibule operate closest door first then other door.
- 2 door switches inside vestibule operate closest door only.

Material
4 Door Operators • 3 Door Switches

SINCE 1880 Norton® THE AMERICAN ORIGINAL

TYPICAL SYSTEM APPLICATIONS

6900 *POWERMATIC* WITH ACCESS CONTROL FOR ENTRY

Opening Description: Fail Secure ADA Opening – Electric Strike & Door Operator

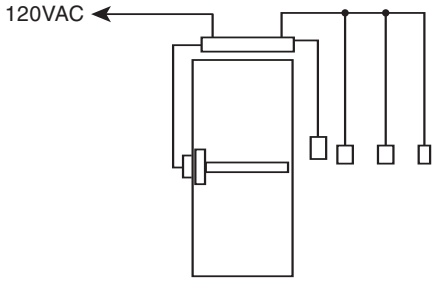

Application
Rated or Non-Fire Rated Metal Door – Interior or Exterior Office, Main Entrance or Stairwell Openings

Operation
- Activate or deactivate system by a key control switch.
- When outside, door switch is inactive, ingress will be by card only.
- Inside door switch will unlock and open the door automatically.
- Push exit device bar to exit at all times.
- Door operator acts as standard door closer when entering or exiting manually.
- Recommend: Folger Adam® Electric Strikes.

Material
Door Operator • 2 Door Switches • Maintained Key Switch • Card Reader • Electric Strike

6900 *POWERMATIC* WITH SMOKE VENTILATION

Opening Description: Fail Secure "Blow Open" Opening – Latch Retraction & Door Operators on Pair of Doors

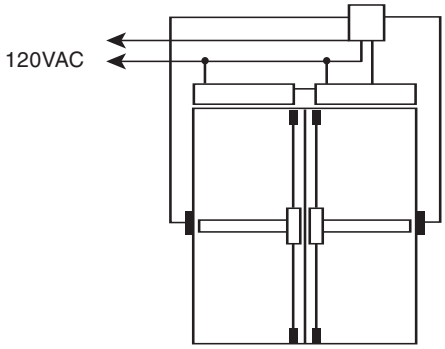

Application
Exterior Metal Doors – Emergency Ventilation Type Openings

Operation
- Doors are to be closed and latched at all times.
- Fire Alarm system sends signal to activate door operators and latch retraction devices.
- Doors open when activated and stay open until loss of power or until fire alarm is reset.
- Door operators act as standard door closers during normal use.
- Recommend: Folger Adam® Electric Strikes.

Material
2 Door Operators • 2 SVR Latch Retraction Exit Devices • 1 Controller • 2 Electric Hinges

6900 *POWERMATIC* WITH LATCH RETRACTION

Opening Description: Vestibule – Two Single Doors & Operators

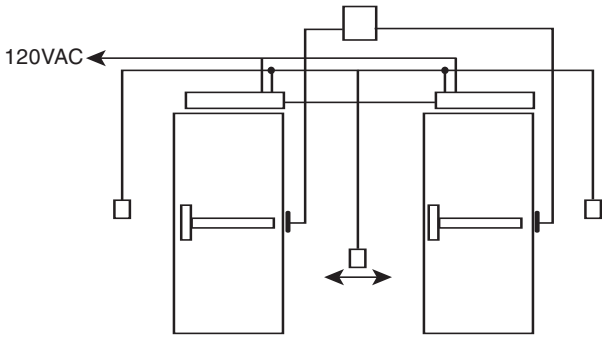

Application
Interior or Exterior Rated & Non-Rated Glass, Wood or Metal Doors – Hospitals, College Dorms, Hotels and other Public Buildings

Operation
- Doors are closed and latched at all times.
- When activated, latch bolts are retracted and door(s) will automatically open.
- 2 door switches outside of vestibule operates closest door first then second door.
- 1 door switch inside vestibule operate closest door only.
- Recommend: Yale® or Corbin Russwin Exit Devices.
- Non-rated devices can be dogged for push/pull operation.

Material
2 Door Operators • 4 Door Switches • 1 - 781N Controller • 2 Electric Hinges • 2 Rim Latch • Retraction Exit Devices

6900 *POWERMATIC* WITH MAGNETIC LOCKS (INTERLOCK)

Opening Description: Vestibule Interlock – Two Pairs of Doors & Operators

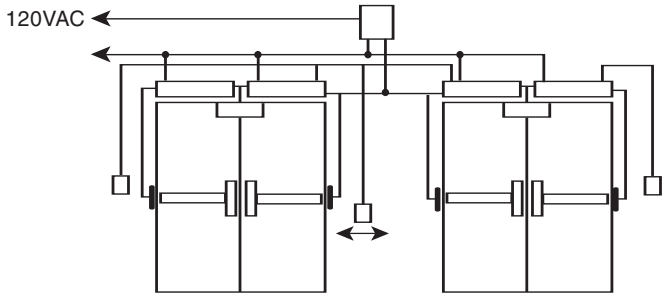

Application
Interior or Exterior Rated & Non-Rated Glass, Wood or Metal Doors – ICU Rooms at Hospitals, Research Labs, Clean Rooms & other Environmentally Controlled Applications

Operation
- Doors are closed and secure by electromagnetic locks.
- Only one pair of doors may be open at a time before the opposite doors can open.
- When activated, magnetic locks unlock and door(s) will automatically open.
- Door switch outside of vestibule operates closest pair of doors.
- Either door switch in vestibule operates closest pair of doors when all doors are closed.
- Recommend: Folger Adam® or Securitron® Magnetic Locks.

Material
4 Door Operators • 3 Door Switches • 2 Double Electromagnetic Locks with Door Position Switch • 4 Electric Hinges • 4 Non-latching Touch Bars with Switch • 1 Power Supply

General Specifications

Door Controls (interior)(exterior) swinging door(s) shall be of rack and pinion design contained within a precision cast aluminum housing. Door closing force shall be adjustable to ensure adequate closing control. Door closing speed shall be controlled by independent hydraulic adjustment valves in the sweep and latch range of the closing cycle. Door Operator shall provide conventional door closer opening and closing forces unless the power operator motor is activated. Door Operator opening force and speed shall be adjustable by independent hydraulic valving to ensure adequate opening control per accessibly codes. Door Operator shall have an adjustable hydraulic back-check valve to cushion the door speed if opened violently. Door Operator shall utilize two on-board push buttons to establish door closed and door open positions. [(Door Operator shall be AUTOMATICALLY ACTIVATED by either a slight push or pull in the direction of opening swing – Push and Go.) (Door Operator shall be SELECTIVELY ACTIVATED by external initiating device i.e. wall switch etc.) (Door Operator shall be both AUTOMATICALLY ACTIVATED and SELECTIVELY ACTIVATED.)] Unit shall have delay switches for motor activation, electric lock interfacing, and hold open time. Units shall have SPDT relay for interfacing latch retraction exit devices or similar products and have 24VDC @ .5A output for connection of electric strike, lock, radio frequency receiver, etc. Units shall have Vestibule sequencing input for operation of two or more units. Unit shall have smoke ventilation inputs to power open doors when activated by fire or smoke alarm. Unit shall have a three position Selector Mode Switch that will permit the unit to be switched “ON” to monitor for function inputs, switched to “H/O” for indefinite hold open function or switched “OFF” which will disable function inputs allowing unit to be used as a manual door closer. Unit shall be U.L. Listed for automatic closing door. The Unit shall be adjustable to provide compliance with the requirements of the Americans With Disabilities Act (ADA). Unit shall be certified by BHMA to meet ANSI A117.1 and A156.19 requirements. Unit shall meet UL, cUL, UL10C and UL10B standards.

Additional Specifications for Functions

For Power Operator Function:

When activated, the unit shall, by means of an integral motor and pump, power open the door at both a speed and force that are adjustable to accessibility codes. The door shall be powered from a door closed position to a full door open position and remain in momentary hold open for 5 seconds minimum (adjustable 0 to 30 seconds in 5 second increments). [(Unit shall power open door to full open position up to 110°.) (Unit shall be capable of opening door manually from 110° – 180°.)] Once unit reaches full hold open position, if reinitiated, unit’s momentary hold open time shall restart from the maximum set time. If unit is initiated during the closing cycle, unit shall revert to opening cycle beginning at that door position. Unit shall have a toggled hold open input that upon first initiation will power door to a maintained hold open position; a second initiation will allow door to close. Unit shall have obstruction detection on closing which will reverse the closing door to the full open position than re-attempt to close door after momentary hold open time has elapsed. Obstruction detection on opening shall shut motor off, allowing door to close under spring force. These obstruction detection features shall be integral to unit. During closing cycle, the unit shall close door under full spring power not to exceed a closing force of 15 lbf.

For Power Assist Function:

When activated, the unit shall, by means of an integral motor and pump, assist in opening the door by reducing the amount of force required to open door. The required opening force shall be adjustable to comply with A.D.A. Standards. The unit shall maintain its motorized assist cycle for __seconds (adjustable from 0 to 30 seconds in 5 second increments). During the motor assist cycle, the unit shall hold the door open at any position at which door is stopped up to full open position. If unit is initiated during the motor assist cycle, the units assist cycle time shall be reset to the maximum set time. Once motor assist has terminated, the unit shall close door under full spring power not to exceed a closing force of 15 lbf.

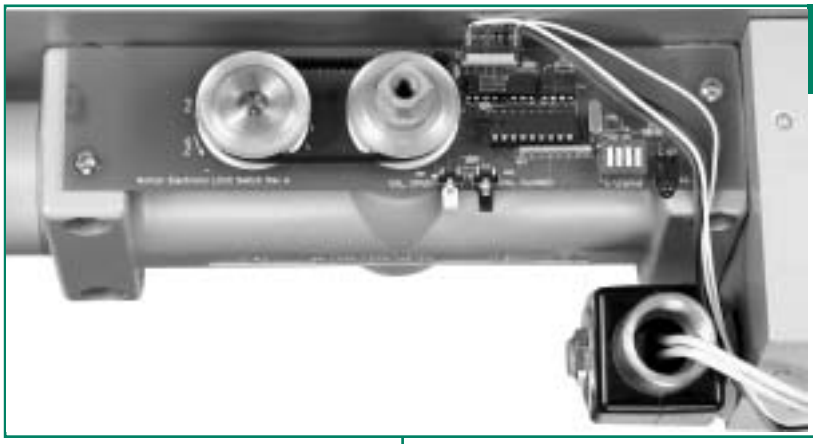

ELS – ELECTRONIC LIMIT SWITCH:

Used for open/closed door setting, push and go selection, obstruction timing and Power Operator/Power Assist Function.

- WHT Button – Used for Door Open setting
- BLK Button – Used for Door Closed setting

Dip Switch Settings

1 – Obstruction Detection Delay
2 – Obstruction Detection Delay
3 – Activation Mode (Push and Go)
4 – Power Assist/Power Operator Mode

See close-up on page 14

SW1 DIP SWITCHES

1 – P/A – Door Operator Function Switch – OFF position selects Operator Mode. ON position selects the Assist Mode.
2 – A/D – Alarm Delay Timer – OFF = 30 second delay. ON = 60 second delay. Used with terminal JP1-1
3 – Not used – OFF
4 – Not used – OFF

TIMER ADJUSTMENTS

- SW2 – Motor Delay – Delays motor start up to allow unlocking of electric hardware.
- SW3 – Solenoid Delay – sets the length of time that the relay will stay energized or de-energized. Used for JP4-3, 4 and 5 relay. Allows electric hardware to stay energized long enough for automatic door opening.
- SW4 – Vestibule Delay – Sets the length of time between receipt of the IN Vestibule signal and the motor start up.
- SW5 – Hold Open Delay/Assist Delay – Sets length of time door holds open at the fully open position for operator function. Sets length of time motor and pump assembly will operate to reduce opening force of door for assist function. When time elapses the door will operate as a standard door closer.

TECHNICAL DETAILS

6900 CONTROL BOARD JP1 TERMINAL: (INPUT CONTROLS) – WALL SWITCHES, MOTIONS SENSORS, 2ND POWERMATIC®, ETC.

1 – O/O – Override Open – Input for blow open or smoke ventilation application – Upon initiation of a closed signal from a fire/smoke alarm panel, the door will open and remain open until signal is terminated. Use with any JP1 ground.
2 – RES 1 – Not Used
3 – AUX2 – Auxiliary Two – This is one of two secondary initiating switch input contacts (JP1-10 is the other.) Use with any JP1 ground to initiate operation.
4 – GND – Ground
5 – INV – IN Vestibule – Used for vestibule function. This contact must be connected to the JP1-6 terminal from another unit to receive an initiating signal. Use this contact with any JP1 ground.
6 – OUTV – Out Vestibule – Used for vestibule function – This contact must be connected to terminal JP5 of another unit to send an initiating signal. Use this contact with any JP1 ground.
7 – GND – Ground
8 – RFT – Toggle (Maintained Hold Open) This input can be used with any normally open switch. The first initiation of this contact will open door and hold it open. A second initiation of this contact will release and close the door. Use with any JP1 ground.
9 – GND – Ground
10 – AUX2 – Auxiliary Two – Same as JP1-3 above.
11 – GND – Ground
12 – PDET – Presence Detector – Permits wiring of a sensor to prevent a closed door from opening or a door that is fully open from closing. Use with any JP1 ground.
13 – GND – Ground
14 – AUX1 – Auxiliary One – Primary initiating switch contact. Initiates door power cycle. For vestibule function, the switch on the initiating side of door is connected to this terminal. Use with any JP1 ground.

JP4 TERMINAL: (OUTPUT CONTROLS) – ELECTRIC STRIKES, LATCH RETRACTION EXIT DEVICES, MAG LOCKS, ETC.

1 – GND – Ground
2 – + 24VDC
3 – NO1 – Relay Contact – Normally open relay dry contact that is switched when any auxiliary inputs are initiated. Switched contact can be maintained up to 12 seconds. Use with JP4-4 CO-1.
4 – CO1 – Relay Contact – Common relay contact for use with terminals JP4-3 and JP4-5.
5 – NC1 – Relay Contact – Normally closed relay contact that is switched when any auxiliary inputs are initiated. Switched contact can be maintained up to 12 seconds.Use with JP4-4 CO1.
6 – NO2 – Alarm Delay – Normally open dry relay contact that is switched when O/O Override Open input is initiated. Relay will stay switched for 30 or 60 seconds (selected by dip switch SW1-2 A/D).
7 – CO2 – Alarm Delay – Common contact for use with terminals JP4-6 and JP4-8.
8 – NC2 – Alarm Delay – Normally closed dry contact that is switched when O/O Override Open input is initiated. Relay will stay switched for 30 or 60 seconds (selected by dip switch SW1-2 A/D).

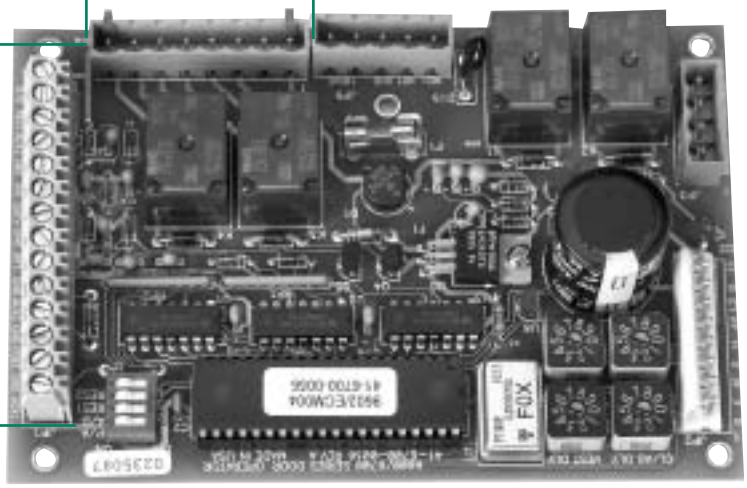

OPERATIONAL SIGNS

#679 Operational Signs
(kit contains 8 signs) Packed with 6900

#425 (1 per)

#426 (1 per)

#427 (2 per)

#430 (1 per)

#431 (1 per)

#428 (2 per)

#682 Signage Kit
(Packed with 576, 660, 672, 674, 676 switches)

#432 (1 per switch)

#433 (1 per switch)

#681 Signage Kit
(Packed with 574, 661, 662, 673, 675, 685 switches)

#424 (1 per switch)

#429 (1 per switch)

ACCESSORIES

Motion Sensor #663

- Unidirectional
- Black cover
- SPDT relay
- Adjustable angle pattern
- 24 VDC input
- Must not be placed where motion of door can be sensed

Switch Post #577 & #578

#577 – Radio Frequency Transmitter (4" x 4" face plate)

#578 – Hard Wired Switch (4" x 4" face plate)

- 5" square steel 1/8" wall thickness
- Durable exterior grade powder coat 42" high
- Finish in aluminum or dark bronze. Specify when ordering.
- Standard formed plastic cap
- Surface mounted (above ground)

Note: For additional accessories consult factory.

Miscellaneous Parts

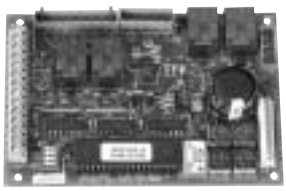
#6700PCB – Control Board

#6900ELS – Repair Kit

#668 Security Plate – Conceals the ON/OFF/HOLD OPEN switch to deter tampering. Packed standard with the *PowerMatic*.

ACCESSORIES

660

661

660, 661
4" x 4" Face Plate

- 4-1/2" x 4-1/2" SS Back Plate
- 15 amp @ 125 VAC
- Flush Mounted – Hard wired
- Fits single or 2 gang electrical box
- **660** – Stainless Steel with Black Letters
- **661** – Blue Powder Coat with White Letters

574, 685

575, 576

574, 575, 576, 685
6" x 6" Face Plate

- 15 amp @ 125 VAC
- Hard wired or Radio Frequency
- Flush or surface** mounted
- Stainless Steel with Blue Letters
- **574** and **576** – Radio Frequency. Used with RF1 option and 687KIT.
- **575*** and **685*** – Hard wired

*Switches may also be installed with single or double gang electrical box using fasteners included.

** When surface mounted switches project 2" from wall.

662

672

662, 672
1-11/16" x 4-1/2" Face Plate

- 1-11/16" x 4-1/2" Back Plate
- SPDT UL listed Switch-Mom.
- 15 amp @ 125 VAC
- Fits 1-3/4" Frame
- **662** – Blue Powder Coat with White Letters
- **672** – Stainless Steel with Black Letters

Note: All hard wired switches are Momentary Contact SPDT, UL Listed.

Activating Door Switches

673

674

- 2-3/4" Round SS Face Plate
- 6-3/4" Round Polycarbonate Trim
- SPDT UL listed Switch-Mom.
- 15 amp @ 125 VAC
- Fits 2-gang electrical box
- **673** – Stainless Steel with Blue Letters
- **674** – Stainless Steel with Black Letters
- Slope design eliminates snagging

Vestibule Switches

675

676

- 2 – 1-1/16" x 4-1/2" Face Plates
- 4-1/2" x 4-1/2" SS Black Plate
- 2 – SPDT UL listed Switches-Mom.
- 15 amp @ 125 VAC
- Fits 2-gang electrical box
- **675** – Blue Powder Coat with White Letters
- **676** – Stainless Steel with Black Letters

RF1 – Radio Frequency Option
A Radio Frequency receiver factory wired and mounted, used to control the *PowerMatic* from a remote location. Wireless. Requires the 572, 574, 576 or 577 (sold separately).

687 KIT – Radio Frequency Option
A Radio Frequency receiver (Field Installed) used to control the *PowerMatic* from a remote location. Wireless. Requires the 572, 574, 576 or 577 (sold separately).

572 – Key Fob Transmitter
Used with RF1 Radio Frequency Option or 687KIT.
(1-1/2"w x 2-3/16"h x 9/16"d)

Body Pump and Motor Assembly

Model Number	Hand	Part Number
6910, 6950	Left	6910LAP-L
6920, 6930, 6960, 6970		6920LAP-L
6910, 6950	Right	6910LAP-R
6920, 6930, 6960, 6970		6920LAP-R

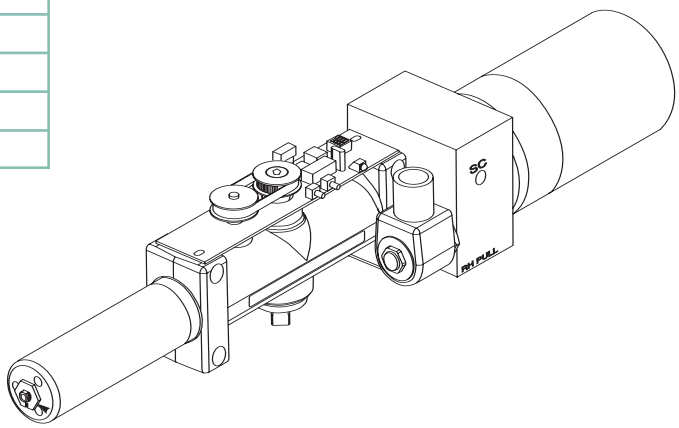

Arm and Track Assemblies

#6610-1 – Arm and Track Assembly
#7210-1A – Arm Assembly
#6610-1T – Track Assembly

#6620-1 – Arm Assembly
#6620-1W – Main Arm & Rod
#6620-12 – Adjusting Tube & Shoe

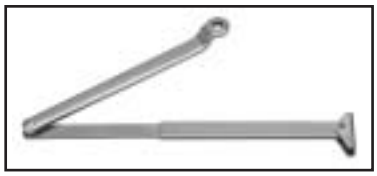

#6630-1 – Arm Assembly
#6630-1W – Main Arm & Rod
#6620-12 – Adjusting Tube & Shoe

#6650-1L – Arm and Track Assembly (LH)
#6650-1R – Arm and Track Assembly (RH)
#7250-1L – Arm Assembly (LH)
#7250-1R – Arm Assembly (RH)
#6610-1T – Track Assembly

#6660-1 – Arm Assembly
#6660-11 – Rod & Snubber Assembly

#6670-1 – Arm Assembly
#6670-11 – Rod & Snubber Assembly

NOTES

NOTES

SINCE 1880

Norton®

THE AMERICAN ORIGINAL

For a complete listing of products and applications please visit our web site.

www.nortondoorcontrols.com

www.yalecorbin.on.ca

Or contact us at:

Norton Door Controls
3000 Highway 74 East
Monroe, NC 28112
Telephone: 800.438.1951
Fax: 800.338.0965

Yale-Corbin Canada Ltd
6940 Edwards Boulevard
Mississauga, Ontario, Canada L5T 2W2
Telephone: 800.461.3007
Fax: 800.461.8989

Norton® PowerMatic® and Yale Security Inc.® are registered trademarks of Yale Security Inc. These materials are protected under U.S. copyright laws. All contents current at time of publication. Yale Security Inc. reserves the right to change availability of any item in this catalog, its design, construction, and/or its materials. Other products' brand names may be trademarks or registered trademarks of their respective owners and are mentioned for reference purposes only.

Copyright 2002, 2005 Yale Security Inc. All rights reserved.

The ASSA ABLOY Group is the world's leading manufacturer and supplier of locking solutions to satisfy end-user needs for security, safety and convenience.

An ASSA ABLOY Group company

ASSA ABLOY

43061-7/05