Norton®

A member of the Yale Security Group

SECURITY DOOR CLOSERS

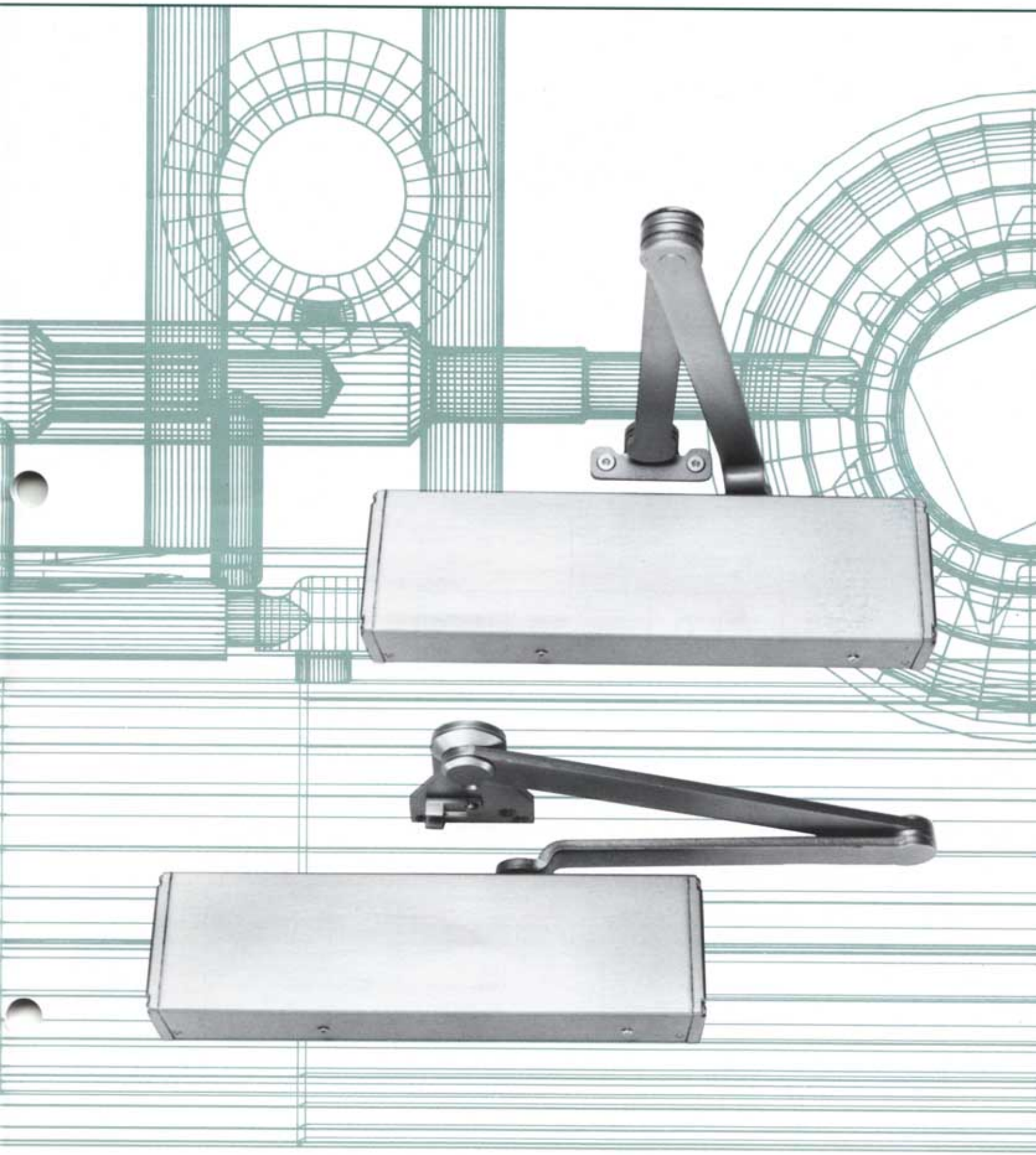

Norton®

A member of the Yale Security Group

GENERAL INFORMATION

Norton's high security closers are designed for use in prisons, other correctional facilities, government buildings, schools, financial institutions, or any installation where vandalism, abuse, escape, personal injury, or damage to doors, walls, and hardware are major concerns.

The Security Closer line uses Norton's top of the line 7700 and 7500 Series closers with a variety of rigid arm options as well as track installations and closer plus arms with hold-open. Fixed link arm assemblies, permanent joints, orbital riveted elbows, arm shoe/soffit joints and TORX screws with thread lock prevent disassembly.

Only the extruded heavy duty metal cover is handed. The arm attaches to the frame with TORX security pin screws, and a 4-point security TORX fastening system resists tampering with the cover and closer body.

Norton's 7500, 7700 and 8000 Series Door Closers are also offered with some of the same arm options as the 7770/7570 Series, but without the security cover. TORX screws are available standard for tamper resistance. These closers are utilized in schools and industrial environments where heavy abuse and vandalism may occur.

The Norton Series 7970 Overhead Concealed Closer is installed in the header of hollow-metal, aluminum, or wood frames.

It is highly tamper resistant and completely concealed when the door is closed. The Series 7970DPS version features a door position switch which is designed to communicate a "door open" and/or "door closed" situation to remote locations. 1/4" movement of the door causes a lever arm to actuate a switch. Movement may be adjusted. The cover plate attaches with TORX screws. The closer is especially useful in detention facilities, warehouses, or other controlled access environments. It may also be used to activate security cameras and alarms.

Ordering Information:

Series 7570/7770 Surface Closer

Prefixes - Designate the Type of Installation
- No Prefix - Closer can be installed regular arm. Frame reveal on hinge side cannot exceed 1/8"
- **PR** - Closer installs parallel arm
- **CLP** - CloserPlus installs parallel arm; built-in door stop effective at one point. Selected at installation from the range 85° - 110° in 5 degree increments.
- **PS** - Closer with Slide Track installs push side.

First 2 digits Identify Series
- **77** - Sized closer w/50% Spring Power Adjustment
- **75** - Multi-sized 2-6 Spring Power Adjustment or 1-4 Spring Power Adjustment

Third Digit Identifies Type of Application
- **7** - Security Arm and Cover with lobular drive TORX screws
- **6** - Security Arm with lobular drive TORX screws. Security Cover not provided. (see page 9)

Fourth Digit Identifies Closer Power
- **2, 3, 4, 5 or 6** - (7700) Sized Closer
- **0** - (7500) Multi-sized closer
- **0BF** - (7500BF) Multi-sized closer

— (prefixes)	75 (1st & 2nd)	7 (third)	0 (fourth)	Options — (suffix)	Hand	Finishes (see p. 3)

Options (suffix)
- **EBC** - Optional feature. Backcheck begins at 15° instead of normal 72°
- **BF** - Accessibility Code Power Range for multi-size door closers (sizes 1-4)
- **DA** - Optional feature. Delayed Action Closing
- **K** - Hold-open CloserPlus arm; hex-key controlled
- **T** - Hold-open CloserPlus arm; thumb-turn controlled
- **ST** - Arm and track

Series 7900/7900DPS Overhead Concealed Closer

797	5	DPS-	—	—	x hand	x finish (see p. 3)
First, Second & Third Digits Overhead Concealed Security Screw	**Fourth Digit** - This digit specifies the closer size i.e. 4, 5 or 6. See sizing chart on page 4 for correct size closer for door width. To order Accessibility Code closer specify **"0BFI"** for interior doors or **"0BFE"** for exterior doors.	Door Position Switch (optional feature)	Hanging Suffix Specifies type of Door Hanging Hardware **"B"** For installation on butt hung door **"OP"** For installation on offset pivot hung door	Options Suffix **"DA"** Adjustable Delayed action closer **"H"** Hold-Open (not used with CLP prefix)		

CONTENTS — PAGE

General 2
Ordering Information 2
Guide Specifications 3
Finishes 3
7570 Series Features 4
7570 Installation Dimensions ..... 6&7
7770 Series Features 5
7770 Installation Dimensions ..... 6&7
7570ST/7770ST Installation 8
Security Arms/Cover 9
7500, 7700, 8000 Series 10
Security Arm Closers 10
7970/7970DPS Series Features 11
7970/7970DPS Series Installation 12
Accessories 13

Norton®

A member of the Yale Security Group

SPECIFICATIONS / FINISHES

GUIDE SPECIFICATIONS

7770

Suggested Specification

Closers for _____ interior (and) exterior doors shall be full rack-and-pinion type with cast aluminum alloy shell. Arm and Closer shall be secured to the frame with TORX security fasteners. Closer shall be surface-mounted and shall project no more than 2- 3/8" (60mm) from the surface of the door. Hydraulic fluid shall be non-gumming, and non-freezing. Closer shall have two non-critical valves, hex-key-adjusted, to independently regulate sweep and latch speed. Closer shall have backcheck cushioning controlled by a hex-key-adjusted valve. Closer shall have backcheck positioning controlled by a hex-key-adjusted valve. Closer shall have adjustable backcheck beginning at 15°. Closer shall have delayed action closing controlled by a hex-key-adjusted valve. Closer shall have power adjustment to permit a 50% increase in power over the minimum closing force for any size. Closer shall be enclosed in a metal cover fastened to the housing at four points with TORX security fasteners. Closer finish to be _____Norton finish. Closers to be Norton Series 7770 or 7770EBC.

ANSI/BMHA/Federal Specs

The Series 7770 door closers have been designed and are manufactured to meet or exceed Grade 1 requirements of ANSI Standard A156.4.

7570

Suggested Specification

Closers for_____interior (and) exterior doors shall be full rack-and-pinion type with cast aluminum alloy shell. Arm and Closer shall be secured to the frame with TORX security fasteners. Closer shall be surface-mounted and shall project no more than 2-3/8" (60mm) from the surface of the door. Hydraulic fluid shall be non-gumming, and non-freezing. Closer shall have multi-size spring power adjustment to permit setting of spring power from size (1-4)(2-6) with additional spring power available. Closer shall have two non-critical valves, hex-key-adjusted, to regulate sweep and latch speed. Closer shall have backcheck cushioning controlled by a hex-key-adjusted valve. Closer shall have backcheck positioning controlled by a hex-key-adjusted valve. Closer shall have adjustable backcheck beginning at 15°. Closer shall have adjustable delayed action closing controlled by a hex-key-adjusted valve. Closer shall be enclosed in a metal cover fastened to the housing at four points with TORX security fasteners. Closer finish to be _____ Norton finish. Closers to be Norton Series 7570, 7570BF, 7570EBC or 7570BF-EBC.

U.L. Listing

All Norton Series 7560/7570/7760/7770 Closers with non-hold-open arms are listed by Underwriters' Laboratories, Inc. for use on labeled fire doors.

7970/7970DPS

Suggested Specification

Closers for _____ interior (and) exterior doors shall be full rack-and-pinion type with cast aluminum alloy shell. Closer shall be concealed in 4" (102mm) high frame header.The slide track shall be concealed in the top rail of the door. Closer shall be provided with a fire-blocking door liner to permit installation in 20 minute fire door assemblies. Closer arm and slide track shall be completely concealed when the door is closed. Hydraulic fluid shall be non-gumming, and non-freezing. Closer shall have (four) (five) non-critical valves, hex-key-operated, to independently regulate closing speed, latch speed, backcheck position and backcheck cushioning and delayed action closing. Closer shall have power adjustment to permit a 50% increase in power over the minimum closing force for any size. Closer shall conform with Accessibility Code Specifications. Hold-open mechanism shall be capable of disengagement when holding function is not required. Hold-Open mechanism shall be fully adjustable as to degrees of door opening and shall release with a manual pressure on the edge of the door in the direction of close. Slide track shall have built-in cushioning shock absorber mechanism. Closer to be Norton 7900 Series with 790 Fire Block. Closer to be Norton 7900BFI 7900 BFE.

7970 DPS

Closer to have a door position switch to per indication of "Door Open"/"Door Closed condition."

Available Finishes

Sprayed Finishes - All Norton Series 7570/7770 Door Closers and Accessories are available in the following sprayed finishes. Order sprayed finishes by Norton Symbol.

Finish Description	Norton Symbol	BMHA Symbol
Aluminum	AL	689
Dull Bronze	DB	691
Dark Statuary Bronze	STAT	690
Black	315	693
Gold	GB	696

Finish Description	Norton Symbol	BMHA Symbol
To complement Durodonic		
Medium Amber	312	694
Dark Amber	313	695
Black	315	693
Corrosion Inhibitor		
Prime Coat*	SRI	600

* Available at extra cost. Beige in color. Closers can be ordered prime coated only. i.e. (SRI), or prime coated with finish coat, i.e. (SRI) x (DB).

Norton®

A member of the Yale Security Group

SERIES 7570 FEATURES

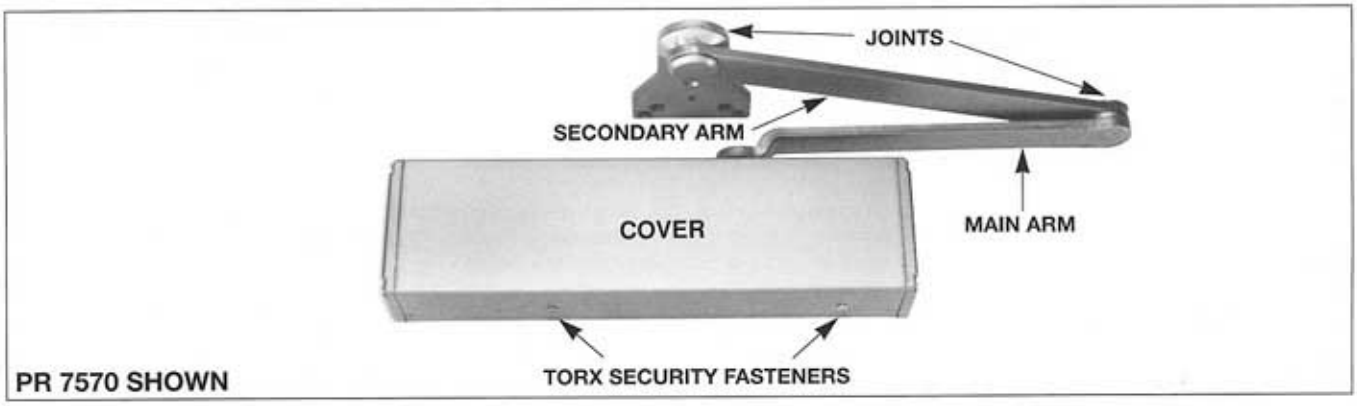

PR 7570 SHOWN

Multi-Size Power: The closer spring assembly can be adjusted through a wide power range. A high shouldered adjustment nut accepts a standard 11/16" socket or wrench.

Two Power Ranges: Each series can be adjusted through a range of sizes: Series 7570 Normal Power Range Closers, sizes 2 thru 6; Series 7570BF Accessibility Code Closers, sizes 1 thru 4.

Rack & Pinion Operation: Provides a smooth transmission of power for control of the door through its full opening and closing cycle.

Adjustable Sweep Speed: An independent regulating valve, hex-key-operated, permits adjustment of the general closing speed.

Adjustable Latch Speed: An independent regulating valve, hex-key-operated, permits adjustment of the door's speed for approximately the last 5° of the closing cycle.

Adjustable Backcheck Cushioning: An independent regulating valve, hex-key-operated, provides an adjustable hydraulic cushioning to the door opening speed toward the end of the opening cycle.

Adjustable Backcheck Positioning: An independent valve, hex-key-operated, allows adjustment of the point, in the door's opening cycle, at which backcheck cushioning takes effect. It provides a range of 20° within which backcheck can be set. The exact range is dependent upon the arm application and templated position of the closer.

Non-Critical Valves: All control valves for sweep speed/latch speed and backcheck control are non-critical and are adjusted by a standard 1/8" hex-key.

Security Arms: Main arm is 3/8" thick heavy steel stamping with a rectangular cross section. Material is 1-1/8' wide with each end flared to 1-3/8". 11" center to center length.

Secondary arm is 5/16' thick heavy steel stamping with a rectangular cross section Material is 1" wide with each end flared to 1-3/8".

Joints feature permanent, orbital riveted elbow and arm shoe/soffit plate joints which prevent disassembly. All joints pivot on large 5/8" diameter stud shafts. The round, low profile, orbital rivet head deters removal with ordinary hand tools. Oilite bronze bushings are pressed into the bearing surface areas at the arm shoe or soffit plate joint and at the elbow joint to reduce frictional load and prevent wear.

The shallow track mount option can be installed on either the push side or the pull side of the door. It's slim line minimizes vandalism and abuse

CloserPlus arm also available.
Door Stop: Steel arm stop riveted to the soffit plate, permits a door swing to within 2° of nominal template opening.

Door Holder: Optional feature. Spring loaded cup pointed plunger in the holder mechanism mates with the ball stud on the soffit plate within 2° of nominal template opening.

Thumbturn Operated Hold-Open: Thumbturn actuated mechanism to engage/disengage optional hold-open. Suffix "T" to the catalog number.

Key Operated Hold-Open: Hex-key actuated mechanism to engage/disengage optional hold-open. Hex-key control provides a deterrent to unauthorized actuation of the hold-open mechanism. Suffix "K" to the catalog number.

Security Cover: Extruded heavy duty metal cover fastens with 4 security mounting screws. Cover is handed.

Security Attachments: All fasteners are lobular drive TORX screws with center security pin.

Closer Body and Arm Assembly are Non-Handed

Closer Adjustment Decal: A decal is permanently affixed to the inside of the closer cover. This decal fully details all closer adjustments.

Warranty

The Series 7570 Door Closer is backed by a 10-year limited warranty. The aluminum shell is warranted for the lifetime of the building in which it is originally installed.

Special Feature Closers

Adjustable Delayed Action Closing: An optional hydraulic feature that adds a third speed range to the closing control cycle. This feature becomes effective when the door is opened and released at any point beyond 70°. This delayed closing enables traffic to clear the opening before the normal closing cycle starts. This feature is advantageous to the handicapped and elderly. It is also valuable for wheeled or other traffic where delayed closing is desirable. Backcheck cushioning and backcheck positioning are standard with all closers including closers with Adjustable Delayed Action Closing. **Order Series 7570DA.**

Enhanced Backcheck (EBC): initiates backcheck at 15° instead of the normal 72°. This optional feature is especially useful in prison installations where the door presents a potential threat for bodily injury. The intensity of enhanced backcheck is fully adjustable. It is available in place of the standard adjustable backcheck and backcheck position features.

Mounting Plate No. 7778: Available for a narrow top rail. Attachments are TORX head screws. See accessories, page 13.

Norton®

A member of the Yale Security Group

SERIES 7770 FEATURES

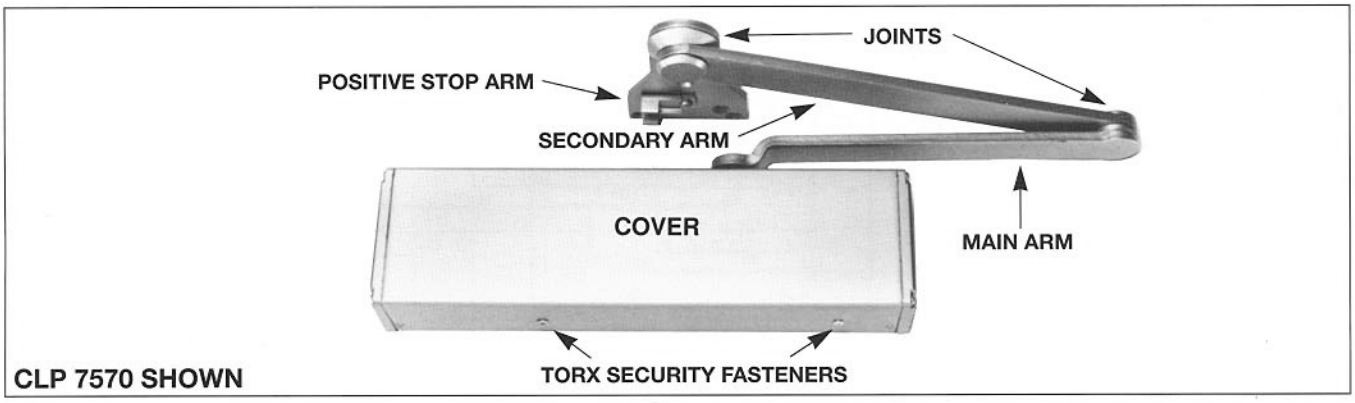

CLP 7570 SHOWN

The Norton Series 7770 Door Closer is available in sizes 2 thru 6.

50% Power Adjustment: Closer power can be increased by 50% over the minimum closing force for each closer size by rotating the 11/16" high-shouldered nut on the end of the closer spring tube.

Rack & Pinion Operation: Provides a smooth transmission of power for control of the door through its full opening and closing cycle.

Adjustable Sweep Speed: An independent regulating valve, hex-key-operated, permits adjustment of the general closing speed.

Adjustable Latch Speed: An independent regulating valve, hex-key-operated, permits adjustment of the door's latch speed for approximately the last 5° of the closing cycle.

Adjustable Backcheck Cushioning: An independent regulating valve, hex-key-operated, provides an adjustable hydraulic cushioning to the door opening speed toward the end of the opening cycle.

Adjustable Backcheck Positioning: An independent valve, hex-key-operated, allows adjustment of the point, in the door's opening cycle, at which backcheck cushioning takes effect. It provides a range of 20° within which backcheck can be set. The exact range is dependent upon the arm application and templated position of the closer.

Non-Critical Valves: All control valves for sweep speed/latch speed and backcheck control are non-critical and are adjusted by a standard 1/8" hex-key.

Security Arms: Main arm is 3/8" thick heavy steel stamping with a rectangular cross section. Material is 1-1/8" wide with each end flared to 1-3/8'. 11" center to center length.

Secondary arm is 5/16" thick heavy steel stamping with a rectangular cross section. Material is 1" wide with each end flared to 1-3/8".

Joints feature permanent, orbital riveted elbow and arm shoe/soffit plate joints which prevent disassembly. All joints pivot on large 5/8" diameter stud shafts. The round, low profile, orbital rivet head deters removal with ordinary hand tools. Oilite bronze bushings are pressed into the bearing surface areas at the arm shoe or soffit plate joint and at the elbow joint to reduce frictional load and prevent wear.

The shallow track mount option can be installed on either the push side or the pull side of the door. It's slim line minimizes vandalism and abuse

CloserPlus arm also available.
Door Stop: Steel arm stop riveted to the soffit plate, permits door swing to within 2° of nominal template opening.

Door Holder: Optional feature. Spring loaded cup pointed plunger in the holder mechanism mates with the ball stud on the soffit plate within 2° of nominal template opening.

Thumbturn Operated Hold-Open: Hex-key actuated mechanism to engage/disengage optional hold-open. Suffix "T" to the catalog number.

Key Operated Hold-Open: Hex-key actuated mechanism to engage/disengage optional hold-open. Hex-key control provides a deterrent to unauthorized actuation of the hold-open mechanism. Suffix "K" to the catalog number.

Security Cover: Extruded heavy duty metal cover fastens with 4 security mounting screws. Cover is handed.

Security Attachments: All exposed fasteners are lobular drive TORX screws with center security pin.

Closer Body and Arm Assembly are Non-Handed

Closer Adjustment Decal: A decal is permanently affixed to the inside of the closer cover. This decal fully details all closer adjustments.

Warranty

The Series 7770 Door Closer is backed by a 10-year limited warranty. The aluminum shell is warranted for the lifetime of the building in which it is originally installed.

Special Feature Closers

Adjustable Delayed Action Closing: An optional hydraulic feature that adds a third speed range to the closing control cycle. This feature becomes effective when the door is opened and released at any point beyond 70°. This delayed closing enables traffic to clear the opening before the normal closing cycle starts. This feature is advantageous to the handicapped and elderly. It is also valuable for wheeled or other traffic where delayed closing is desirable. Backcheck cushioning and backcheck positioning are standard with all closers including closers with Adjustable Delayed Action Closing. **Order Series 7770DA.**

Enhanced Backcheck (EBC): initiates backcheck at 15° instead of the normal 72°. This optional feature is especially useful in prison installations where the door presents a potential threat for bodily injury. The intensity of enhanced backcheck is fully adjustable. It is available in place of the standard adjustable backcheck and backcheck position features.

Mounting Plate No. 7778: Available for a narrow top rail. Attachments are TORX head screws. See accessories, page 13.

Norton®

A member of the Yale Security Group

SERIES 7570 / 7770 INSTALLATION / SIZING CHART

Installed Regular Arm

Door Opening	Dimensions "T"	
	Inches	mm.
To 100°	6-3/8	182
101° to 120°	5-3/8	137
121° to 150°	3-3/8	86
151° to 180°*	3-1/8	79

*Wall conditions permitting

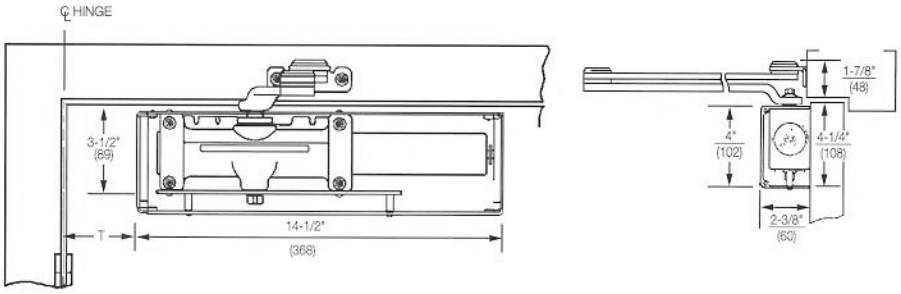

Installed Parallel Arm

Door Opening	Dimensions "T"	
	Inches	mm.
To 100°	7-3/8	167
101° to 120°	6-5/8	168
121° to 180°	5-1/2	140

Maximum Hinge width 5" (127) for doors swinging beyond 150°

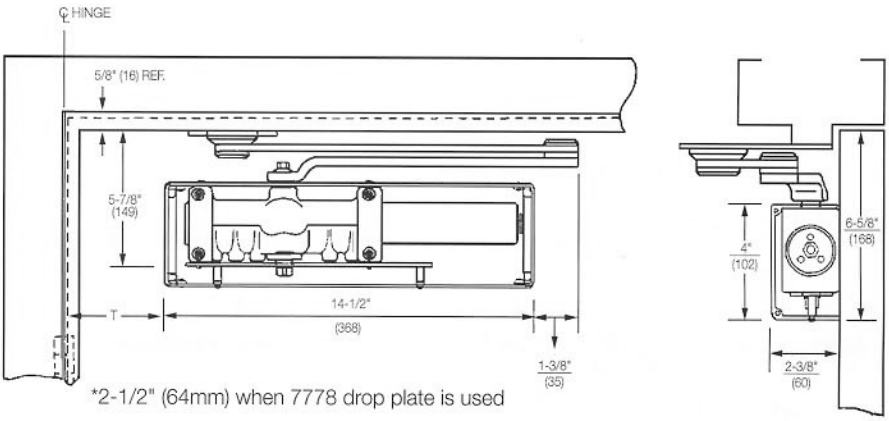

*2-1/2" (64mm) when 7778 drop plate is used

DOOR CLOSER SIZING CHARTS

SERIES 7570 CLOSER
Normal Power Range Closer ❶

MAXIMUM DOOR SIZE WOOD OR METAL INCHES (METERS)		*POWER ADJUSTMENT FULL 360° TURNS	NORTON CATALOG NUMBER FOR CLOSER NON HOLD OPEN
INTERIOR	EXTERIOR		
32 (0.81)	—	0	7570 or PR7570
38 (0.97)	30 (0.76)	2	
44 (1.12)	36 (0.91)	5	
50 (1.27)	42 (1.07)	8	
—	48 (1.22)	11	
*MAXIMUM TURNS AVAILABLE		15	

❶ Power of closer can be adjusted to conform to the conventional sizing requirements outlined in ANSI A156.4, Standards for Door Controls-Closer.

SERIES 7570BF CLOSER
Accessibility Code Closers with low opening resistance ❷

MAXIMUM DOOR SIZE WOOD OR METAL INCHES (METERS)		*POWER ADJUSTMENT FULL 360° TURNS	NORTON CATALOG NUMBER FOR CLOSER NON HOLD OPEN
INTERIOR	EXTERIOR		
36 (0.91)	—	2	7570BF or PR7570BF
42 (1.07)	—	5	
—	36 (0.90)	6	
48 (1.22)	36 (0.90)	8	
—		12	
*MAXIMUM TURNS AVAILABLE		15	

❷ Power of closer can be adjusted to conform to the sizing requirements outlined in ANSI A117.1. Specifications for Making Buildings and Facilities Accessible To and Usable By Physically Handicapped People.

SERIES 7770 CLOSER

MAXIMUM DOOR SIZE WOOD OR METAL INCHES (METERS)		NORTON CATALOG NUMBER FOR CLOSER NON HOLD OPEN	
INTERIOR	EXTERIOR	REG. ARM	PARA. ARM
30 (0.76)	—	—	PR7772
36 (0.91)	30 (0.76)	7772	PR7773
42 (1.07)	36 (0.91)	7773	PR7774
46 (1.22)	42 (1.07)	7774	PR7775
54 (1.37)	46 (1.22)	7775	PR7776
—	52 (1.32)	7776	—

All dimensions are for reference only. Dimensions in parentheses are millimeters unless noted otherwise. Door sizing information based on installation on standard weight doors, 7'0" (2.13m) high 1-3/4" (44mm) thick; hung on anti-friction hinges and operating under normal conditions.

Norton®

A member of the Yale Security Group

SERIES CLP7570 / CLP7770 INSTALLATION / SIZING CHART

Parallel Arm CloserPlus

Door Opening	Dimensions "T"	
	Inches	mm.
85°	8-7/8	225
90°	8	203
95°	7-3/8	187
100°	6-5/8	168
105°	6-1/8	156
110°	5-1/2	140

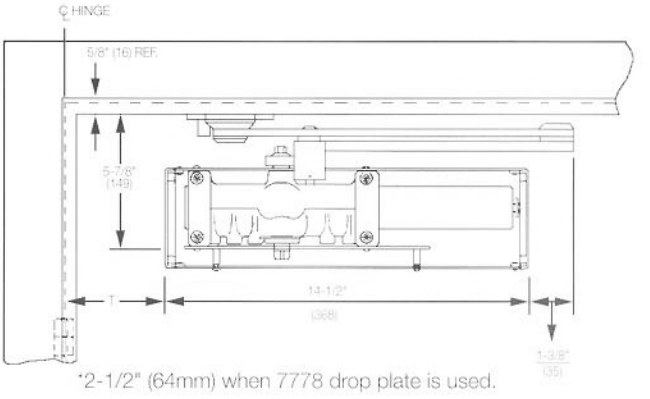

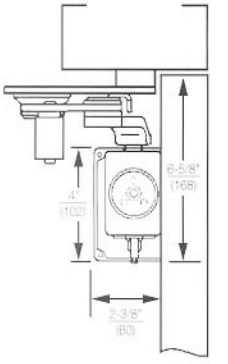

CLP-7570/7770 – STOP ONLY

CLP-7570T/7770T – THUMBTURN HOLD-OPEN & STOP

CLP7570K/7770K – HEX-KEY HOLD-OPEN & STOP

SERIES CLP7770

DOOR SIZE WOOD OR METAL INCHES (METERS)		NORTON CATALOG NUMBER FOR CONTROL		
INTERIOR	EXTERIOR	STOP ONLY	THUMBTURN HOLD-OPEN	HEX-KEY HOLD-OPEN
28-32 (0.70-0.80)	——	CLP-7772	CLP-7772-T	CLP-7772-K
33-36 (0.85-0.90)	28-32 (0.70-0.80)	CLP-7773	CLP-7773-T	CLP-7773-K
37-42 (0.95-1.05)	33-36 (0.85-0.90)	CLP-7774	CLP-7774-T	CLP-7774-K
43-48 (1.10-1.20)	37-42 (0.95-1.05)	CLP-7775	CLP-7775-T	CLP-7775-K
——	43-48 (1.10-1.20)	CLP-7776	CLP-7776-T	CLP-7776-K

SERIES CLP-7570 –Normal Power Range ❶

DOOR SIZE WOOD OR METAL INCHES (METERS)	POWER ADJUSTMENT FULL 360° CLOCKWISE TURNS OF ADJUSTMENT NUT		NORTON CATALOG NUMBER FOR CONTROL		
	INTERIOR	EXTERIOR (OUTSWING)	STOP ONLY	THUMBTURN HOLD-OPEN	HEX-KEY HOLD-OPEN
28-32 (0.70-0.80)	0	2	CLP-7570	CLP-7570-T	CLP-7570-K
33-36 (0.85-0.90)	2	5			
37-42 (0.95-1.05)	5	8			
43-48 (1.10-1.20)	8	11			
Maximum Turns Available	15				

❶ Closer power can be adjusted to conform to conventional sizing requirements outlined in ANSI A156.4-1986. Standards for Door Controls – Closers.

SERIES CLP-7570BF –Accessibility Code Power Range ❷

DOOR SIZE WOOD OR METAL INCHES (METERS)	POWER ADJUSTMENT FULL 360° CLOCKWISE TURNS OF ADJUSTMENT NUT		NORTON CATALOG NUMBER FOR CONTROL		
	INTERIOR	EXTERIOR (OUTSWING)	STOP ONLY	THUMBTURN HOLD-OPEN	HEX-KEY HOLD-OPEN
28-30 (0.70-0.75)	1	2	CLP-7570BF	CLP-7570BF-T	CLP-7570BF-K
31-36 (0.80-0.90)	3	6			
37-42 (0.95-1.05)	5				
43-48 (1.10-1.20)	8				
Maximum Turns Available	15				

❷ Closer power can be adjusted to conform to sizing requirements outlined in ANSI A117.1.4-1986. Specifications for Making Buildings and Facilities Accessible to and Usable By Physically Handicapped People.

Norton®

A member of the Yale Security Group

Series 7570ST/7770ST INSTALLATION / SIZING CHART

Pull Side Track Installation

- Door Opening to 110° with cushion stop 180° without cushion stop
- Minimum Door Width 26" (66)
- Maximum Hinge Width 5" (127)
- For doors swinging 150°
- Minimum top rail 3-7/8" (98)

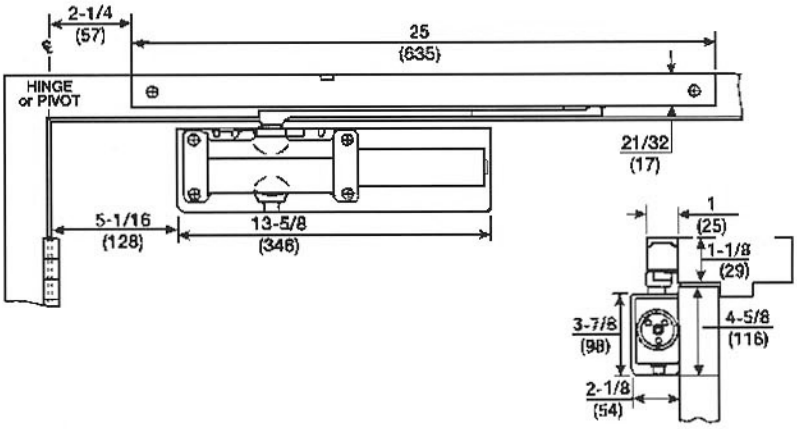

Push Side Track Installation

- Door Opening to 120°
- Minimum Door Width 29" (74)
- Maximum Hinge Width 5" (127)
- Use of auxiliary stop may be required to prevent damage to door and frame

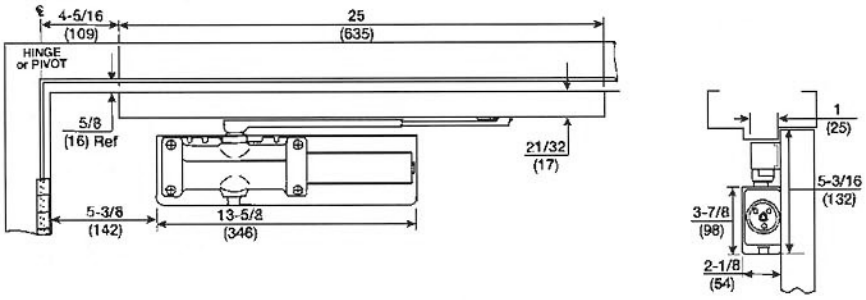

SERIES 7570BFST CLOSER
Normal Power Range Closer ❶

MAXIMUM DOOR SIZE WOOD OR METAL INCHES (METERS)		*POWER ADJUSTMENT FULL 360° TURNS	NORTON CATALOG NUMBER FOR CLOSER
INTERIOR	EXTERIOR		
32 (0.80)	—	0	7560ST 7570ST PS7570ST PS7560ST
36 (0.90)	32 (0.80)	2	
42 (1.05)	36 (0.90)	5	
48 (1.20)	42 (1.05)	8	
—	48 (1.20)	11	

SERIES 7570ST CLOSER
Accessability Code Closers With Low Opening Resistance ❷

MAXIMUM DOOR SIZE WOOD OR METAL INCHES (METERS)		*POWER ADJUSTMENT FULL 360° TURNS	NORTON CATALOG NUMBER FOR CLOSER
INTERIOR	EXTERIOR		
32 (0.80)	—	1	7570ST 7560ST PS7570ST PS7560ST
36 (0.90)	—	3	
—	32 (0.80)	4	
42 (1.05)	—	5	
—	36 (0.90)	6	
—	42 (1.05)	8	
48 (1.20)	48 (1.20)	12	

SERIES 7770ST CLOSER

MAXIMUM DOOR SIZE WOOD OR METAL INCHES (METERS)		NORTON CATALOG NUMBER FOR CLOSER
INTERIOR	EXTERIOR	
30	—	7772ST PS7772ST 7762ST PS7762ST
36	30	7773ST PS7773ST 7763ST PS7763ST
42	36	7774ST PS7774ST 7764ST PS7764ST
48	42	7775ST PS7755ST 7765ST PS7765ST
—	48	7765ST PS7765ST 7766ST PS7766ST

All dimensions are for reference only. Dimensions in parentheses are millimeters unless noted otherwise. Door sizing information based on installation on standard weight doors, 7'0" (2.13m) high 1-3/4" (44mm) thick; hung on anti-friction hinges and operating under normal conditions.

Norton®

A member of the Yale Security Group

SECURITY ARMS

Security Door Closer Application No. 7771-1 Rigid Regular Arm Non Hold-Open

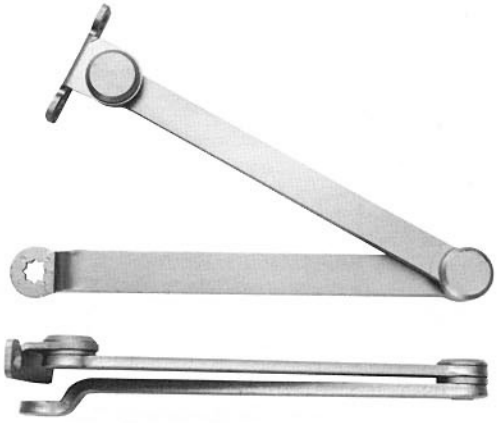

Regular Arm 7771-1

Security Door Closer Application No. CLP-7771-8K Key Hold-Open CloserPlus Hold-Open Arm

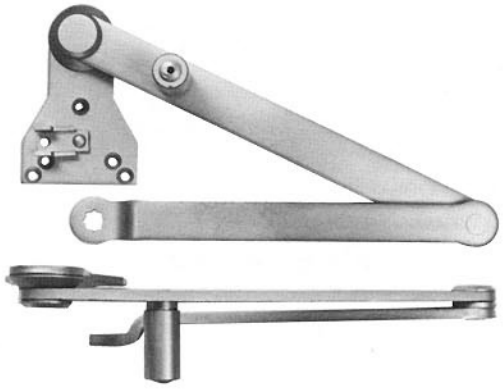

CloserPlus CLP-7771-8K

Security Door Closer Application No. 7771-5 Rigid Parallel Arm

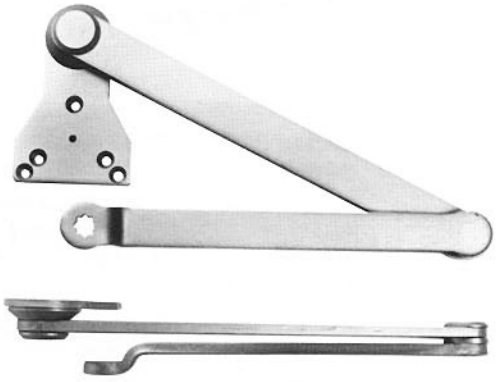

Parallel Arm 7771-5

Security Door Closer Application No. CLP-7771-8T Thumbturn Hold-Open CloserPlus Hold-Open Arm

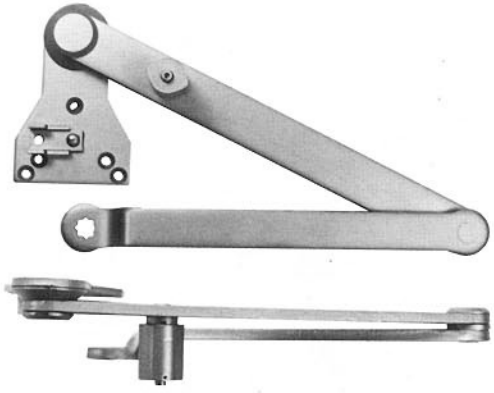

CloserPlus CLP-7771-8T

Security Door Closer Application No. CLP-7771-5 CloserPlus Arm Stop Only Non Hold-Open

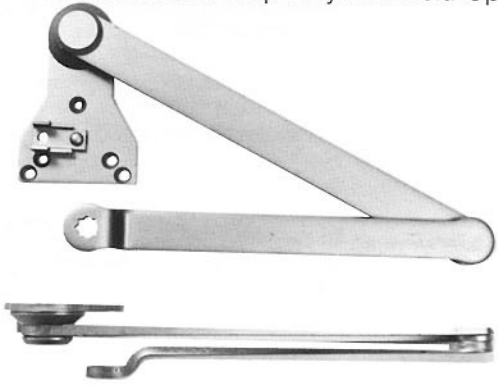

CloserPlus CLP-7771-5

Security Door Closer Application Slide Track

7771-ST-1 Pull Side NHO Arm & Track Assy
7771-ST-5 Pull Side NHO Arm & Track Assy

Norton®

A member of the Yale Security Group

SECURITY ARM CLOSERS

The Norton® 7500/7700/8000 Series closers are also available for extra heavy duty requirements in schools and industrial environments where vandalism and heavy abuse may occur. The closers feature the same arms and TORX screw attachments as provided with the security closers, but do not offer security covers. Designate "6" in the third digit when ordering.

Note: Standard screw attachments are also available. Example: 7560 x standard screw attachments.

Series 7760

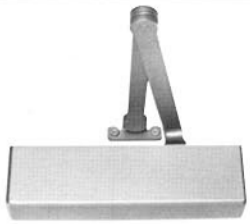

7760 Regular Arm Shown

Closer Sizes 2, 3, 4, 5 & 6
- Control of 7700 Series closer
- 50% Spring Power Adjustment
- Full Cover, 2-1/8" projection
- Non-Handed
- Adjustable Backcheck Cushioning
- Adjustable Backcheck Positioning
- Two Valve Control, Sweep and Latch Speeds
- ANSI Grade 1, UL Listed
- 10 Year Warranty
- Security Arm & Security TORX Screw Attachments
- CLP Arms Optional
- Slide Track Arm Optional (push or pull side)

Series 7560/7560BF

CLP 7560 Shown

Multi-Size Closer
- Control of 7500/7500BF Series Closer
- Power: 7500 sizes 2 thru 6 Plus 50%; 7500BF sizes 1 thru 4
- Full Cover, 2-1/8" projection
- Non-Handed
- Adjustable Backcheck Cushioning
- Adjustable Backcheck Positioning
- Two Valve Control, Sweep and Latch Speeds
- ANSI Grade 1, UL Listed
- 10 Year Warranty
- Security Arm & Security TORX Screw Attachments
- CLP Arms Optional
- Slide Track Arm Optional (push or pull side)

Series 8260/8260BC
Series 8460/8460BC

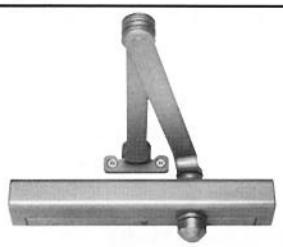

8260 Regular Arm Shown

Closer Sizes 2, 3, 4, 5 & 6
- Control of 8200/8400 Series Closer
- Slim Cover 8260 (shown above)
- Full cover 8460
- Non-Handed
- Two Valve Control, Sweep and Latch Speeds
- Backcheck - Suffix BC i.e.: 8400BC
- ANSI Grade 1, UL Listed
- 10 Year Warranty
- Security Arm & Security TORX Screw Attachments
- CLP Arms Optional only when Closer is ordered with Backcheck (Suffix BC)

Series 8360/8560

PR 8560 Shown

Closer Sizes 2, 3, 4, 5 & 6
- Control of 8300/8500 Series Closer
- 50% Spring Power Adjustment
- Slim Cover, 8360
- Full Cover, 8560 (shown above)
- Non-Handed
- Two Valve Control, Sweep and Latch Speeds
- ANSI Grade 1, UL Listed
- 10 Year Warranty
- Security Arm & Security TORX Screw Attachments
- Adjustable Backcheck Cushioning
- CLP Arms Optional

Series 8361/8361BF
Series 8561/8561BF

CLP 8561-K Shown

- Control of 8301/8501 Series Closer
- Power: 8361/8561 Sizes 2 thru 6 Plus 50%; 8361BF/8561BF sizes 1 thru 4
- Slim Cover, 8361/8361F
- Full Cover, 8561/8561BF (shown above)
- Non-Handed
- Adjustable Backcheck Cushioning
- Two Valve Control, Sweep and Latch Speeds
- ANSI Grade 1, UL Listed
- 10 Year Warranty
- Security Arm & Security TORX Screw Attachments
- CLP Arms Optional

Norton®

A member of the Yale Security Group

SERIES 7970 / 7970 DPS

STANDARD FEATURES

Concealed Transom Mounting: closer mounts in header of wood, aluminum or hollow metal frames; minimum 4" (102mm) header required. (A 2" x 4" dust/grout box and a removable stop, provided by the door and frame supplier, is required.) Wood frame installation will generally require special offset templating.

Concealed Top Rail Mounted Slide Track: requires a minimum 2" (51mm) top rail depth and a 1-3/4" (44mm) minimum door thickness.

Concealed Arm: when door is closed: requires a 3/8" deep door cutout for arm clearance.

Accommodates Most Door Hanging Methods: closer can be installed on doors hung on either butt hinges, offset or center pivots. Offset and center pivots supplied by others.

Shock Absorbing Door Stop: non-hold-open closers have an adjustable position stop block. However, use of an auxiliary door stop is always recommended.

Dress Plates: supplied with all 7970 Series closers are secured to bottom of closer with TORX screws. Prevents tampering and offers streamlined appearance.

Security Fasteners: (TORX screws with security pin) furnished standard on all 7970 Series closers

Aluminum Alloy Shell: lightweight with proven durability.

Rack & Pinion Operation: assures smooth power transmission thru entire opening and closing cycles.

50% Spring Power Adjustment: power is adjustable up to 50% over minimum closing force for each closer size; spring adjustment gear assembly adjusted by a standard screwdriver.

Adjustable Closing Speed: independent regulating valve; hex-key operated.

Adjustable Latch Speed: independent regulating valve; hex-key operated.

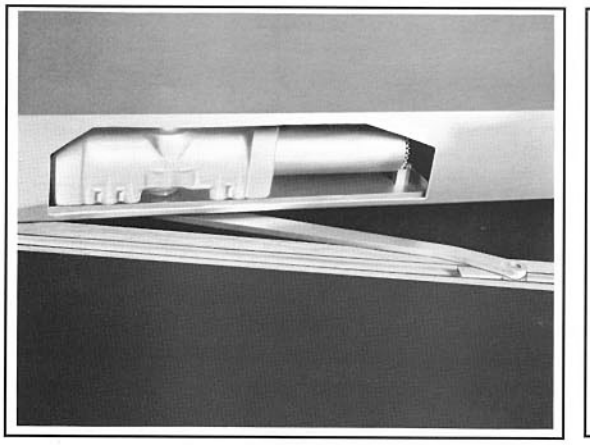

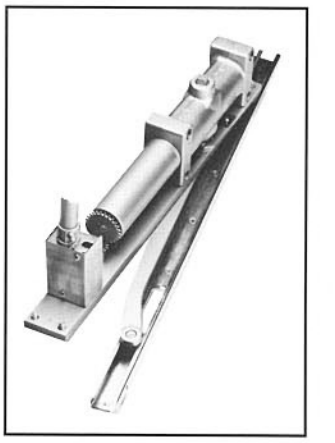

Non-Critical Valves: all control valves are non-critical; operated by a 1/8" hex-key.

Non-Hold-Open Arm: 13" (330mm) long with offset bend to permit 180° door opening; handed.

Separate Hinges/Pivots: hinges or pivots supplied by others therefore not packaged with door closers; no early jobsite opening of closer package until closer is installed, no lost hardware.

Optional Features

790 Fire Block Door Liner: for use in 20 minute fire door assemblies where recognized by local authorities having jurisdiction.

Adjustable Delayed Action Closing: delays closing at any point beyond 70° of door opening; for handicapped or wheeled traffic.

Accessibility Code Closer: available as 7970BFI Series for interior doors, 7970BFE Series for exterior doors, with low opening resistance to conform to the requirements of ANSI A117.1 Specifications. These closers provide reduced opening forces to conform with barrier code requirements for the handicapped and still provide acceptable door control. Consult the Norton Marketing Department for application details of this closer.

Security Option 7970 DPS

Door Position Switch (DPS): this switch is Single Pole Double Throw (SPDT) momentary contact, with one (1) normally open and one (1) normally closed set of contacts. The three switch terminals are wired to the integral conduit box for connection to incoming wiring. The switch and wiring are for operation with 6 to 24 VAC/VDC systems.

Door Position Switch Adjustment: Can be made at the opening without removing the closer from the frame, The door position adjustment test socket is accessible, during installation for easy adjustment of the switch cam. Test probes from a volt meter are inserted into the test socket while using a 1/8" hex wrench to adjust the "Position Switch Adjustment".

Test Socket: Volt meter or test light may be connected to test socket to test normally open circuit or normally closed circuit at the door opening. The door position switch may be adjusted at the same time without removal of closer from door.

Norton®

A member of the Yale Security Group

SERIES 7970DPS INSTALLATION

Installation Dimensions:

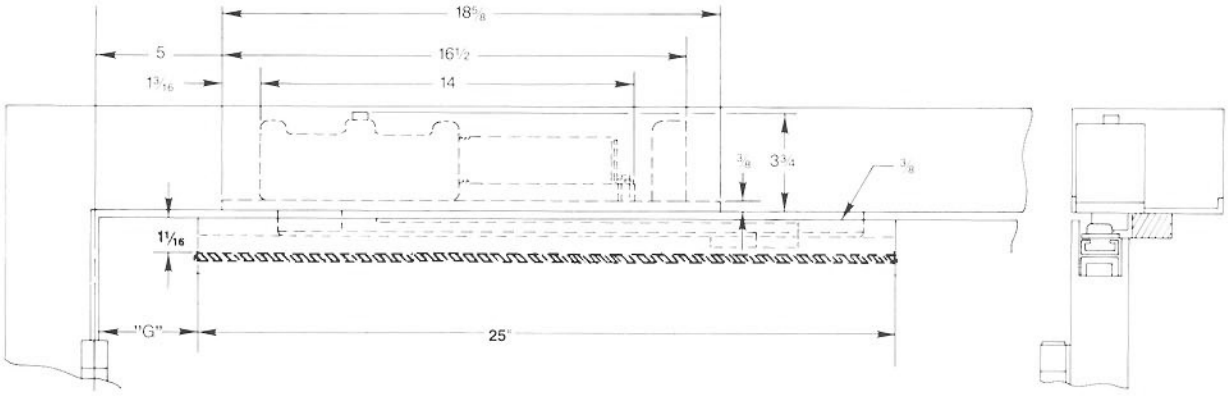

All dimensions are for reference only. Dimensions in parentheses are millimeter unless noted otherwise. Door sizing information is based on installation on standard weight doors 7'0" (2.13m) high, 1-3/4" (44mm) thick, hung and operating under normal conditions.

All Series 7970 closers are shipped with a slide track 25" (635mm) long.

For narrower doors a shorter length slide track is required. The track may be cut to desired length at the time of installation. This provides versatility and assures proper length track. The template position for the slide track must always be measured form the centerline of the door's pivot point.

Butt Hinge Installation

Non-Hold Open

Minimum door width 27". Track 25" long. Use of stop and cushion block up to 110°. Use of auxiliary door stop is required for openings greater than 110°, up to 180° conditions permitting.

3/4" Offset Pivot Installation

Non Hold-Open

Openings to 95° when separate door stop (not supplied) is used. For doors less than 29" wide, contact Factory.

Wiring: Switch rating 5 amps @ 30 VDC/250 VAC. Switch is momentary contact single pole double throw.

a. **Red lead from switch is open contact.** Power is OFF when door is in fully closed position but is ON when door is opened more than 1/4". Used to communicate "open door" situation.

b. **Black lead from switch is closed contact.** Power is ON when door is in fully closed position but power is OFF when door is opened more than 1/4". Used to communicate "closed door" situation.

c. **White lead from switch connects to power input.**

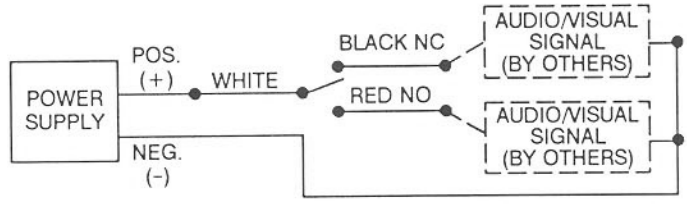

Wiring of switch must be in compliance with N.E.C. Class 2 wiring specifications.

Series 7970 Door Sizing		
Maximum Door Width		Closer Size
Interior	Exterior	
32 (0.81)	——	4
38 (0.97)	32 (0.81)	5
48 (1.22)	38 (0.97)	6

Door sizing information is based on installation on standard weight doors hung on anti-friction hinges or pivots and operating under normal conditions. Use next larger size closer where draft conditions exist oar where door swings beyond 150°.

Accessibility Code Compliance

Maximum Door Width Wood or Metal		Closer Size
Interior	Exterior	
48 (1.22)	——	OBFI
——	36 (0.91)	OBFE

Norton®

A member of the Yale Security Group

COVER / ACCESSORIES FOR SURFACE CLOSERS

Drop Plates & Brackets for Parallel Arm Installation

Parallel Arm Drop Plate

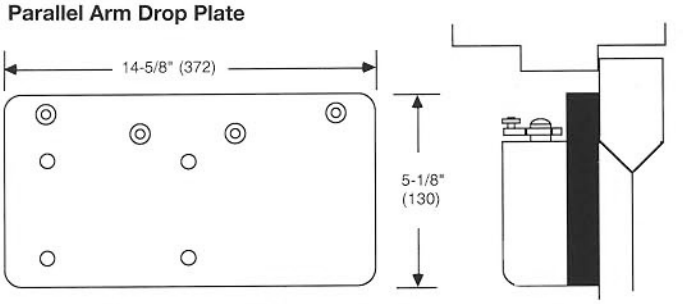

Narrow Top Rail #7778 – Drop Plate: For use where a narrow top rail prevents the closer from being mounted directly to the door surface. This drop Plate can be used to mount a closer on top rail as narrow as 2-1/2" (64mm) in height.

Spacer Block #6891

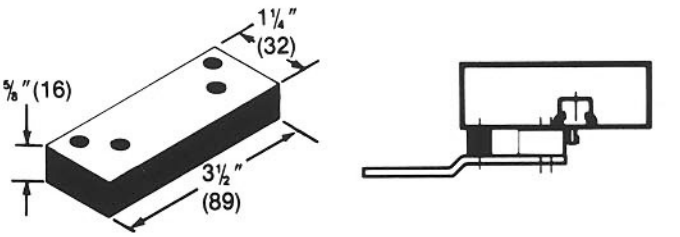

Clearance/Support Blade Stop – # 6891 Spacer Block: For use where the door frame has a blade stop and the soffit plate must be mounted on the frame rabbet. This accessory is used in combination with the standard Spacer Block to provide clearance of the blade stop.

Spacer Block #2019S

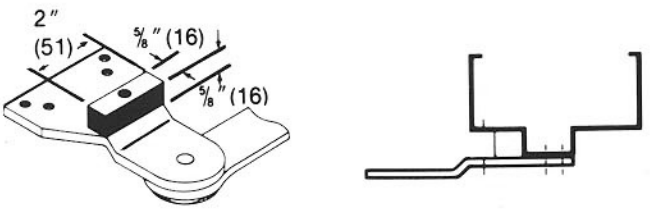

Standard – #2019S Spacer Block: For use where a narrow frame soffit does not provide adequate support for the soffit plate. Supplied as standard with all parallel rigid arm closers.

Angle Bracket #2019L

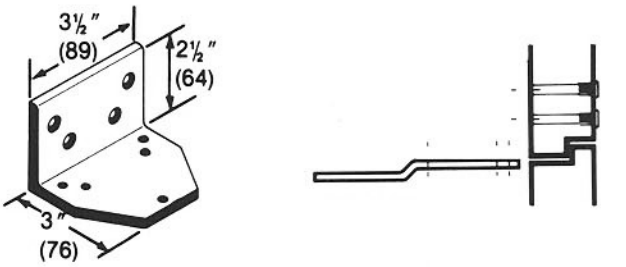

Flush Rabbeted Transom – #2019L Angle Bracket: For use where flush transom conditions prevent mounting of the standard soffit plate. This bracket is used in combination with the standard soffit plate.

6890 Angle Bracket

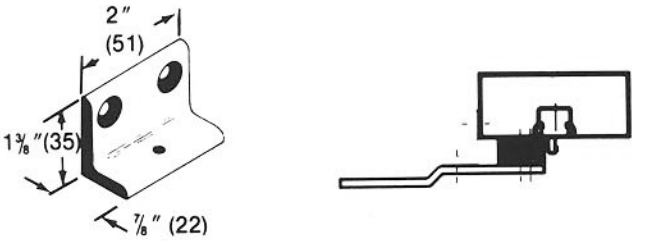

Narrow Frame – #6890 Support Bracket: For use where the frame is narrow, and the soffit plate cannot be mounted directly to the frame soffit or rabbet. Used in combination with the #6891 Spacer Block on blade stop frames to provide extra support and needed clearance of the blade stop.

TORX Screwdriver Kit

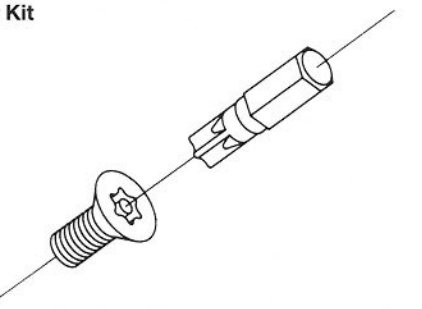

TORX screw fasteners are highly tamper-resistant. They are provided with all security closers and closers with security arms only. Screws require a hex-lobular drive which mates to security pin in screw head. Three different size bits are available along with a TORX handle. A TORX tool kit is available that contains a handle and six bits: T10, T15, T20, T25, T27 and T30.

TORX® is a registered trademark of Textron, Inc.

7770M Cover

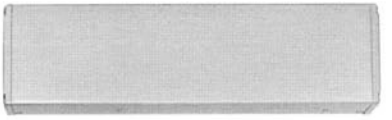

Security Series Door Closers Extruded Cover

Norton®

A member of the Yale Security Group

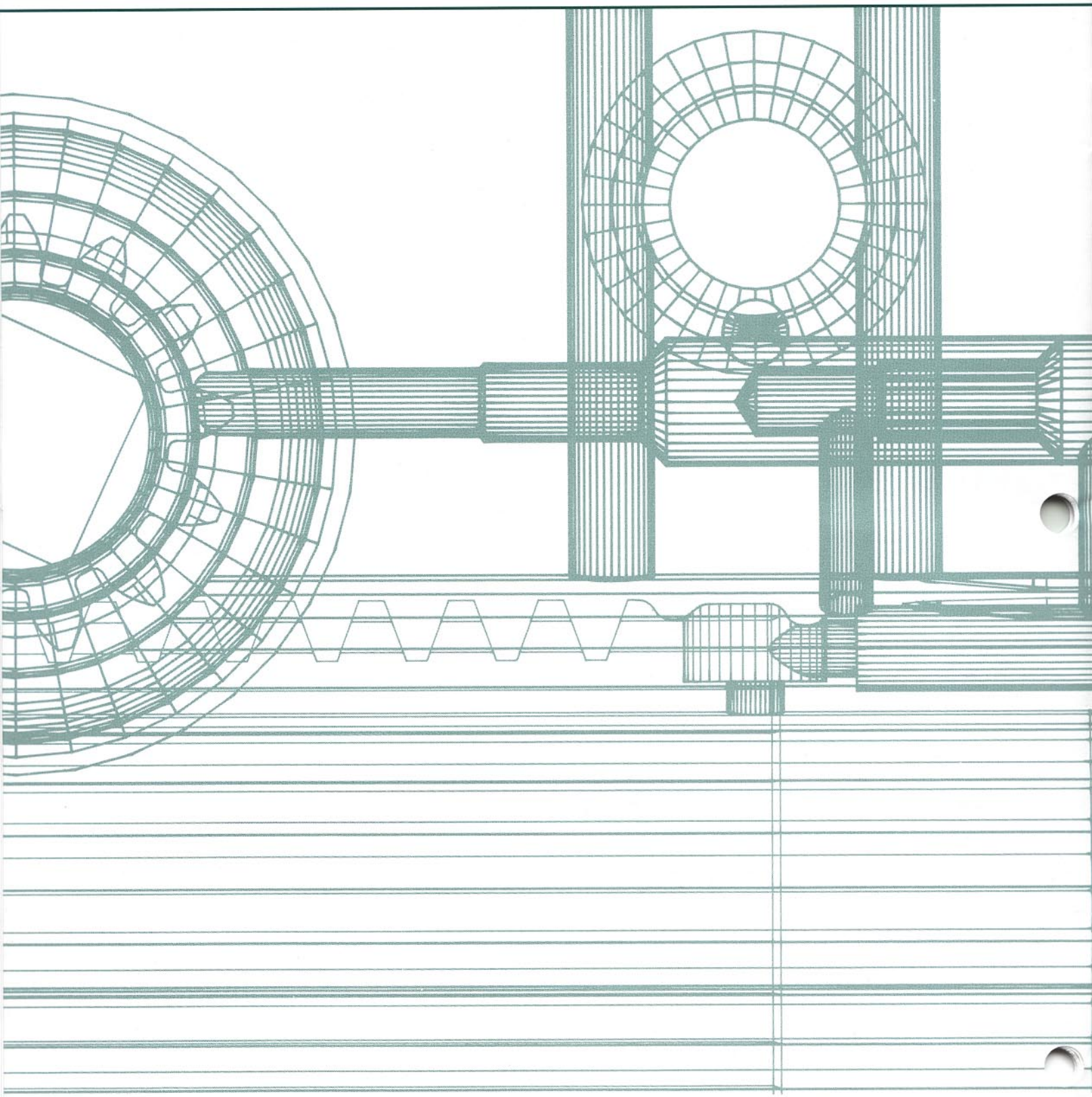

For more information contact your Norton Representative or Norton® Door Controls, A Division of Yale Security Inc., P.O. Box 25288, Charlotte, NC 28229-8010. Telephones (800) 438-1951. In North Carolina: (704) 283-2101. FAX (704) 289-2875.

In Canada, 3160 Orlando Drive, Mississauge, Ontario, Canada L4V 1R5. Telephone: (905) 672-6220. FAX (905) 672-9022.

These materials are protected under U.S. copyright laws. All contents current at time of publication. Norton reserves the right to change availability of any item in this catalog, its design, construction and/or its materials.

#43039-C-3.0-06/01