Norton®

Yale Security Inc.

SERIES 7200 ELECTROMECHANICAL CLOSER-HOLDER RELEASING DEVICE

INTRODUCTION / CONTENTS

Introduction

The Series 7200 Electromechanical Closer-Holders combine the functions of an electromechanical door holder with one of our finest door controls, the Series 7700 door closer. The 7200 features a choice of two types of hold-open functions:

- **Infinite Hold-Open (I suffix):** The door will hold-open at any degree of opening up to 175° with a maximum allowable door opening of 180°.
- **Selective Hold-Open (S suffix):** The door will hold open at any degree of opening, beyond a pre-set hold-open point, up to 175°, with a maximum allowable door opening of 180°. Factory set at 80°, but is adjustable to virtually any degree of door opening desired.

The Series 7200 Electromechanical Closer-Holders are available as four basic units for controlling fire/smoke doors.

Support Unit Series 7200MP (I or S): The Support Unit contains a door closer with internal holder only. These units install on either single doors or on both leafs of a pair of doors. Its hold-open function is controlled by compatible UL listed smoke detection equipment such as area/ceiling smoke detectors.

Support Unit Overhead Concealed Series 7290MP (I or S): Pull side only.

Master Unit Series 7200MPD (I or S): This unit contains an integral smoke detector, and a door closer with internal holder. The Master Unit can be used to control a single door or a pair of doors when used in conjunction with either a Slave Unit or a Tandem Unit.

Units with Integral Smoke Detectors Feature:

- Dual Chamber Ionization Sensor
- Momentary Contact Test Switch
- Green LED "Power-On"
- Red LED "Alarm"
- Latching Alarm
- 1 set Normally Open dry alarm contacts.
- 1 set Normally Closed dry trouble contacts.

Slave Unit Series 7200MPS (I or S): The Slave Unit contains a door closer with internal holder only. The Slave Unit hold-open function is controlled by the detector in the Master Unit. 24VDC only.

Tandem Unit Series 7200MPT (I or S): The Tandem Unit contains a door closer with internal holder only. A Master Unit signals to a control panel. The panel controls both the Master and Tandem. 120VAC only.

Additional applications include:

Connected Free Swing Releasing Device: For health care applications to allow doors with 7200 Fire/Smoke controls to be opened and closed without closer spring force. Pull side only.

Executive™ Door Holder/Release: RF (I) (S) Catalog Suffix. A modified Electromechanical Closer-Holder for executive offices or any door where remote RF wireless door-closing control is desired. Not intended for use on labeled doors.

Contents — Page

Introduction 2
Features 5
ANSI Specification 5
U.L. Listing 5
Electromechanical Closer-Holder Releasing Device
Master Units With Integral Smoke Detector
Pull side mounting Series 7210MPD/7250MPD 6
Push side mounting Series 7220 MPD/7230MPD 8
Slave Units Controlled By Master Unit
Pull side mounting Series 7210MPS/7250MPS 7
Push side mounting Series 7220MPS/7230MPS 9
Tandem Units Controlled By Signal From Alarm Panel
Pull side mounting Series 7210MPT/7250 MPT 7
Push side mounting Series 7220MPT/7230MPT 9
Support Units Controlled By Signal From Area/Ceiling Detectors
Pull side mounting Series 7210MP/7250MP 10
Push side mounting Series 7220MP/7230MP 11
Closer-Holder
Connected Free Swing-Arm & Track
Master Unit With Integral Smoke Detector
Pull side mounting Series 7240 MPD 12
Support Unit Controlled By Signal From Area/Ceiling Detectors
Pull side mounting Series 7240MP 12
Closer-Holder
Overhead Concealed Rigid Slide Arm & Track
Pull side mounting Series 7290MP 13
Executive™ Door Holder/Release Unit Released By Radio Frequency From Hand Held Remote
Pull side mounting Series 7210RF 6
Push side mounting Series 7220RF/7230RF 8
Connected Free Swing
Pull side mounting Series 7240RF 12
Wiring 14-16
Suggested Specification 4
Finishes 4
How To Order 3

How to Order

The Norton Series 7200 Electromechanical Closer-Holder is available with a wide variety of options. Use the outline below to select the correct Catalog Number for the type of Closer-Holder you require.

Closer/Holder x Door Hand x Voltage x Finish

72	1	4	MPDI

"72" First and Second Digits — Define the 7200 Series Closer-Holder

Third Digit — This digit specifies the side of the door the unit is mounted and the type of arm.

- "1" - Pull Side; Rigid Slide Arm & Track [Maximum Reveal 1/8" (3mm), for greater reveal see "5" below.]
- "2" - Push Side: Double Lever Arm [Reveals: 2-3/4"-4" (70-120mm) to 180°; 4"-7" (102-179mm) to 165°]
- "3" - Push Side: Double Lever Arm [Reveals: 4"-7" (102-179mm) to 180°]
- "4" - Pull Side; Connected Free Swing Slide Arm and Track
- "5" - Pull Side; Double Egress Slide Arm and Track [Reveals: 1/8"-3" (3-76mm) to 110°]
- "9" - Pull Side; Overhead Concealed Door Closer with Rigid Slide Arm & Track.

Suffix: Specifies the type of Unit and the type of Hold-Open.

- **MPI** - Support Unit; Infinite Hold-Open
- **MPS** - Support Unit; Selective Hold-Open
- **MPDI** - Master Unit; Infinite Hold-Open
- **MPDS** - Master Unit; Selective Hold-Open
- **MPSI** - Slave Unit; Infinite Hold-Open (24VDC only)
- **MPSS** - Slave Unit; Selective Hold-Open (24VDC only)
- **MPTI** - Tandem Unit; Infinite Hold-Open (120VAC only)
- **MPTS** - Tandem Unit; Selective Hold-Open (120VAC only)
- **RFI** - Executive Door Holder/Release; Infinite Hold-Open
- **RFS** - Executive Door Holder/Release; Selective Hold-Open

Fourth Digit — This digit specifies the closer size.

Closer Size	Maximum Door Size
Slide Arm & Track	
"3"	3'-4" (1.00 meters)
"4"	3'-8" (1.10 meters)
"5"	4'-0" (1.20 meters)
Overhead Concealed	
"4"	2'-8" (0.80 meters)
"5"	3'-2" (1.00 meters)
"6"	4'-0" (1.20 meters)
Double Lever Arm	
"3"	3'-6" (1.05 meters)
"4"	4'-0" (1.20 meters)

SPECIFICATIONS / FINISHES / PACKING

Suggested Specification

Closer for_____doors shall be electro-mechanical (with integral smoke detector having a dual ionization chamber) and completely enclosed in a metal cover. (Units shall be surface mounted to the frame face [on the pull (hinge side) on the push (opposite hinge side)] of the door [and shall project no more than 2-9/16" (65mm) from the surface of the frame]. (Closer shall be installed in the header of the frame, and the slide track mortised into the door's top rail). Closer unit shall be hydraulic, full rack and pinion type with a cast aluminum alloy shell. Hydraulic fluid shall be non-gumming and non-freezing. Closer unit shall have two non-critical valves to independently regulate closing and latch speed. It shall also have an adjustable backcheck cushioning valve. All valves shall be adjustable with a hex-key. Closer unit shall have spring power adjustment to permit a 50% increase in closing power over the minimum closing force for any size.

Electromechanical Closer shall have (Infinite) (Selective) Hold-Open (Free Swing Operation) and shall be able to attain a maximum opening of 180° (with Hold-Open to 175°). Unit to be fail safe and must close the door during any electrical power interruption to the unit. (Closer-Holder to be Executive Door Holder/Release with release actuated by battery operated hand-held controller).

Unit(s) to operate on (_____VAC, 60 Hz) (_____VDC) and will accept (surface) (concealed) wiring. Amperage draw shall not exceed (.086 Amps for 24 VAC/DC) (.051 Amps for 120 VAC) units. Supplier to coordinate electrical requirements with electrical and alarm system engineers. Wiring (and conduit) by others.

Electromechanical Units to be Norton Series 7200 (Closer-Holder) (Free Swing Releasing Device), (Executive Door Holder/Release).

Available Finishes

Sprayed Finishes—All Norton Series 7200 Electro-mechanical Closer-Holders are available in the following sprayed finishes. Order sprayed finishes by the Norton Symbol.

Finish Description	BHMA Symbol	Norton Symbol
Aluminum	689	AL
Dull Bronze	691	DB
Black	693	315
Gold	696	GB
Dark Statuary Bronze	690	STAT
To Complement Duranodic		
Medium Amber	694	312
Dark Amber	695	313
Black	693	315
Corrosion Inhibitor		
Prime Coat*	600	SRI

*Available at extra cost. Color is beige. Closer-Holders can be ordered prime coated only, i.e. (SRI), or prime coated with finish coat, i.e. (SRI) x (DB).

Packing

All Norton Series 7200 Closer-Holders are packed one to a box with the appropriate arm or arm and slide track, a hex-key for adjusting control valves, installation instructions and machine screws for mounting. Units with slide tracks also include sex nuts.

Special Fasteners

Thru-bolts and grommet nuts (TBGN) or sex nuts (SN) are available to order.

Norton®

Yale Security Inc.

SERIES 7200 GENERAL INFORMATION

Features

Handed: Specify when ordering. Closer sizes: 3, 4 or 5.

Rack and Pinion Operation: Provides a smooth transmission of power for control of the door through its full opening and closing cycle.

Aluminum Alloy Shell: Closer bodies are constructed of a special aluminum alloy, carefully selected to accommodate individual closer characteristics and operating conditions.

Adjustable Closing Speed: An independent regulating valve, hex-key-operated, permits adjustment of the general closing speed.

Adjustable Latch Speed: An independent regulating valve, hex-key-operated, permits adjustment of the door's speed for approximately the last 10° of the closing cycle.

Adjustable Backcheck Cushioning: An independent regulating valve, hex-key-operated, provides an adjustable hydraulic cushion to the door's opening speed toward the end of the opening cycle.

Adjustable Backcheck Position: An independent valve, hex-key-operated, allows adjustment of the point, in the door's opening cycle, at which backcheck cushioning takes effect.

Non-Critical Valves: All control valves for sweep/latch speed and backcheck cushioning are non-critical and are adjusted by a standard 1/8" hex-key.

Adjustable Spring Power: Power can be adjusted up to 50% over the minimum closing force for each size of closer by rotating the 11/16" power adjustment nut on the end of the closer.

Closer Adjustment Decal: A decal is permanently affixed to the inside of the cover. This decal fully details sweep and latch speed adjustments, backcheck cushioning, backcheck position, and spring power adjustment.

Projection: Sprayed metal cover, conceals the entire unit and projects only 2-9/16" (65mm) from the frame face.

Infinite Hold-Open: The door will hold open at any degree of opening up to 175°, with a maximum allowable door opening of 180°.

Selective Hold-Open: The door will hold open at any degree of opening, beyond a pre-set hold-open point, up to 175°, with a maximum allowable door opening of 180°. Selective Hold-Open Units will be factory set for hold-open at 80° and beyond. Simple field adjustment will permit hold-open range to be increased or decreased.

Fail Safe: In the event of a power failure, the solenoid will deenergize and the Closer-Holder will then operate as a normal door closer.

Wiring Option: All Series 7200 Electromechanical Closer-Holders will accommodate either concealed or surface wiring.

U.L. Listing

All Norton Series 7200 Master Units with integral smoke detectors have been tested and evaluated for public safety by Underwriters Laboratories and are listed for application on labeled fire/smoke doors. Series 7200 Slave Units, Tandem Units and Support Units without integral smoke detector are listed for application with compatible labeled or listed fire/smoke detection equipment.

Norton Series 7200 CFS Closer Control with connected free-swing arm is U.L. listed as a Releasing Device for Fire/Smoke Barrier Doors.

Master Unit Illustrated

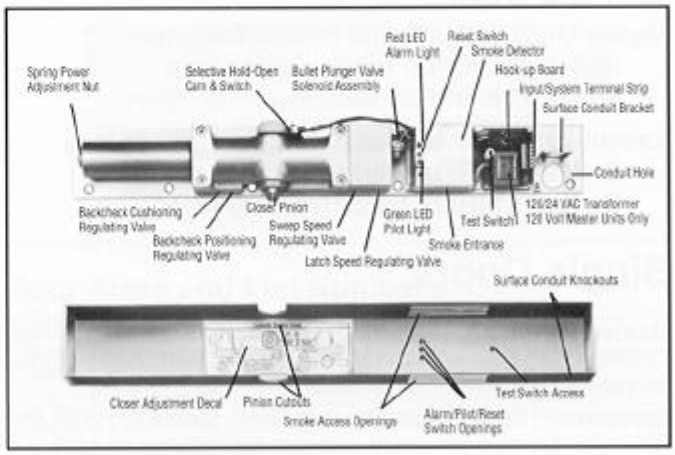

The Series 7200 is available in the most commonly used operating voltages of 24 Volts AC/DC or 120VAC, 60 Hz. Master Units are available in a combination of these two voltages.

Units with Integral Smoke Detectors

Dual Chamber Ionization Sensing: Detector employs dual ionization chambers to substantially reduce the probability of false alarms.

Fire/Smoke Control Circuit: Interprets the signal from the detector and provides switching contacts to interrupt hold-open solenoid, to sound alarms, etc.

Alarm (Relay) Contacts: Normally open in standby condition (operating and sensing for smoke condition). These contacts close during an alarm condition (smoke detected) and may be used to switch power from the solenoid to an optional local alarm.

Trouble (Relay) Contacts: Normally closed in standby condition, these supervisory contacts monitor the continuity of power within the detector circuit. Any power interruption within the detector circuit will open these contacts. They can then be used to simultaneously indicate a Trouble Condition to the Alarm Panel on a separate trouble circuit.

Locked-In Alarm: The unit which alarms must be manually reset. This can be accomplished by remote control from the alarm system panel or by the reset switch in the smoke detector module. Reset switch is accessible through a hole in the cover.

Alarm Light: A red LED illuminates when the detector goes into the Alarm Condition (smoke detected). This light is easily visible through an opening in the cover and makes an alarmed unit easy to identify.

Pilot Light: A green LED easily visible through an opening in the cover is illuminated at all times except when a Trouble Condition is sensed. Indicates at a glance whether or not the unit is operating normally.

Test Switch: Permits door to be released from hold-open without causing a "Trouble" condition at the alarm panel. Allows for periodic testing of the automatic door release function.

ANSI Specification

The Series 7200 Electromechanical Closer-Holders conform to ANSI A156.15; 2 year limited warranty on electrical components; 10 year limited warranty on mechanical components. Made in U.S.A.

Norton®

Yale Security Inc.

SERIES 7210/7250 MASTER UNITS

Pull (Hinge) Side Mounting Rigid Slide Arm and Track

Master Units with Integral Smoke Detector
- **Series 7210MPDI: Infinite Hold-Open**
- **Series 7210MPDS: Selective Hold-Open**

Executive™ Door Holder/Release
- **Series 7210RFI: Infinite Hold-Open**
- **Series 7210RFS: Selective Hold-Open**

Single Doors

Master Units with Integral Smoke Detector: Both Series 7210MPDI and Series 7210MPDS are self-contained and can be installed to control a single door.

Executive™ Door Holder/Release: Both Series 7210RFI and 7210RFS are self-contained and can be installed to control a single door.

Pairs of Doors

Master Unit x Slave Unit: Smoke Detector in the Master Unit controls its own closer-holder solenoid and the solenoid in the Slave Unit.

Master Unit x Tandem Unit: Smoke Detector in the Master Unit signals conditions (Stand-by, Trouble/Alarm) to an alarm systems panel. This panel controls the signal to the hold-open solenoids in both the Master Unit and the Tandem Unit.

Executive Door Holder x Slave Unit: Consult the factory for details of this installation.

These Closer-Holders are surface mounted to the pull (hinge) side frame face. These units require a minimum ceiling clearance of 4" (102mm) and a maximum frame reveal of 1/8" (3mm).† The slide track mounts directly to the door. Units can be installed as shipped to accommodate doors opening to 180° with a maximum hold-open point of 175°. The buffer block assembly in the track will accommodate doors opening to 125°. An auxiliary door stop is required for doors opening beyond 125°.

†Double Egress Frames (Deep Reveals): Where the pull (hinge) side frame reveal exceeds 1/8" (3mm), a special slide arm is available to order. This arm will accommodate frame reveals in excess of 1/8" (3mm) up to 3" (76mm) with a maximum allowable door swing of 110°. Order Series 7250MPD1,7250MPDS,7250RFI or 7250RFS.

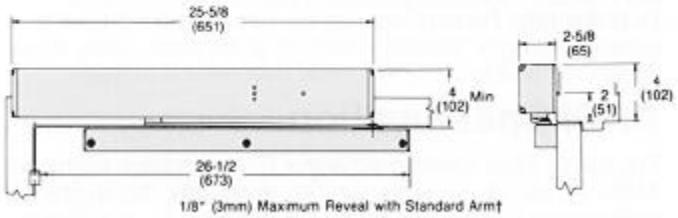

1/8" (3mm) Maximum Reveal with Standard Arm†

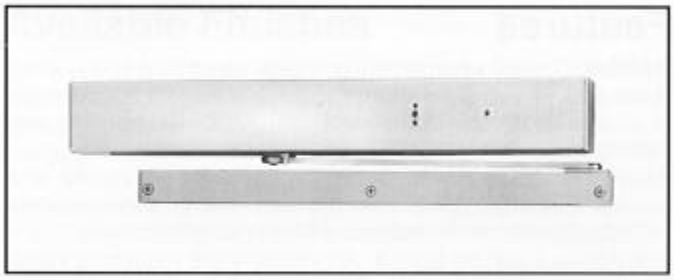

Door Sizes and List Numbers

Maximum* Door Size Ft. In. (meters)	NORTON CATALOG NUMBER			
	MASTER UNIT CLOSER-HOLDER		EXECUTIVE DOOR/RELEASE	
	INFINITE HOLD/OPEN	SELECTIVE HOLD/OPEN	INFINITE HOLD/OPEN	SELECTIVE HOLD/OPEN
3'-4" (1.00)	7213MPDI	7213MPDS	7213RFI	7213RFS
3'-8" (1.10)	7214MPDI	7214MPDS	7214RFI	7214RFS
4'-0" (1.20)	7215MPDS	7215MPDS	7215RFI	7215RFS

*Minimum Door Size is 2'-4" (.70 M)

Electrical Data Master Units

MASTER UNIT CATALOG NUMBER	NUMBER POWER INPUT LINES* (PAIRS)	OPERATING VOLTAGE (INPUT)	AMPERAGE DRAW (AMPERES)			(CAN BE) USED IN CONJUNCTION WITH
			SMOKE DETECTOR		SOLENOID COIL	
			STANDBY	ALARM		
7210MPDI-24 7210MPDS-24	1 1	7213MPDS	.016 @ 24VDC	.035 @ 24VDC	.070 @ 24VDS	Slave Unit 7210MPSI-24 Slave Unit 7210DMPSS-24
7210MPDI-120 7210MPDS-120	1 1	7214MPDS			.070 @ 24VDS	Slave Unit 7210MPSI-24 Slave Unit 7210MPSS-24
7210MPDI-24 7210MPDS-24	2 2	24VAC/DC for Detection Input & 120VAC for Solenoid Coil Input			.035 @ 24VDS	Tandem Unit 7210MPTI-120 Tandem Unit 7210MPTS-120

Electrical Data Door Holder/Release

EXECUTIVE DOOR HOLDER/RELEASE CATALOG NUMBER	NUMBER POWER INPUT LINES* (PAIRS)	OPERATING VOLTAGE (INPUT) 24VDC	AMPERAGE DRAW (AMPERES)	
			SOLENOID COIL	INTERRUPTING SWITCH
7210RFI-120	1	120VAC	.070 @. 24VDC	015 @ 210VAC
7210RFS-120	1			

*Pairs of input lines required to supply Operating Voltage or Voltages to the Unit. Pairs listed do not include signal wires to Alarm Panels nor control wires to other units' solenoids.
Maximum/Minimum Operating Voltage Parameters: +10%; -15%

Rigid Slide Arm Series 7210

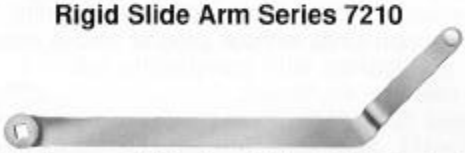

Double Egress Slide Arm (Handed) Series 7250

Norton®

Yale Security Inc.

SERIES 7210/7250 SLAVE/TANDEM UNITS

Pull (Hinge) Side Mounting Rigid Slide Arm and Track

Slave Units Controlled by Master Unit Smoke Detector

Series 7210MPSI: Infinite Hold-Open
Series 7210MPSS: Selective Hold-Open

Tandem Units Controlled by Signal from Alarm Panel

Series 7210MPTI: Infinite Hold-Open
Series 7210MPTS: Selective Hold-Open

Pairs of Doors:

Master Unit x Slave Unit: Smoke Detector in the Master Unit controls the closer-holder solenoids in both the Master Unit and the Slave Unit.

Master Unit x Tandem Unit: Smoke Detector in the Master Unit signals conditions (Stand-by, Trouble/ Alarm) to an alarm systems panel. This panel controls the signal to the closer-holder solenoids in both the Master Unit and the Tandem Unit.

These Closer-Holders are surface mounted to the Pull (hinge) side frame face. The standard mounting for these units requires a minimum ceiling clearance of 4" (102mm) and a maximum frame reveal of 1/8" (3mm) † The slide track mounts directly to the door. Units can be installed as shipped to accommodate doors opening to 180° with a maximum hold-open point of 175°. The buffer block assembly in the track will accommodate doors opening to 125°. An auxiliary door stop is required for doors opening beyond 125°.

†Double Egress Frames (Deep Reveals): Where the pull (hinge) side frame reveal exceeds 1/8" (3mm), a special slide arm is available to order. This arm will accommodate frame reveals in excess of 1/8" (3mm) up to 3" (76mm) with a maximum allowable door swing of 110°. Order Series 7250MPSI or 7250MPSS Slave Units; Series 7250MPTI or 7250MPTS Tandem Units.

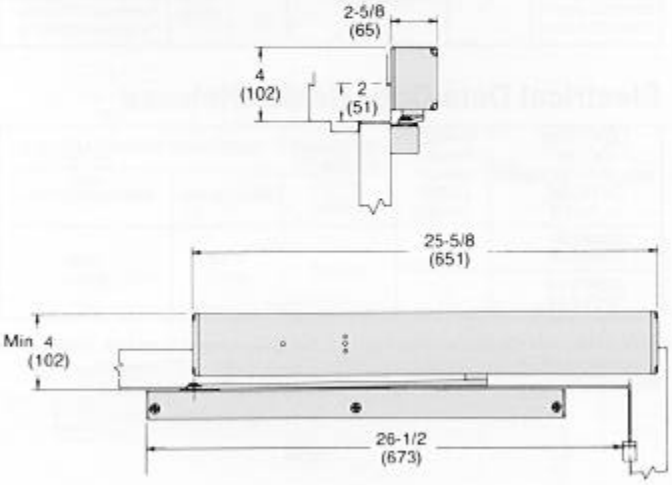

1/8" (3mm) Maximum Reveal with Standard Arm†

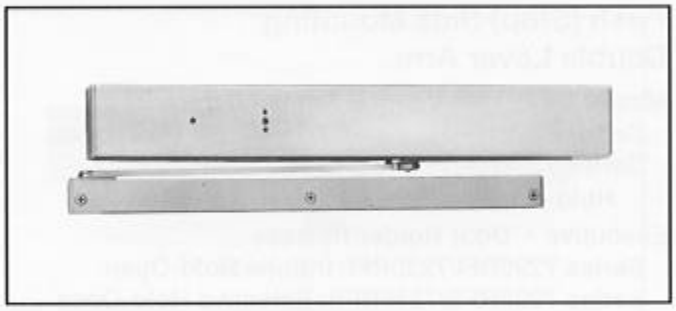

Door Sizes and List Numbers

Maximum* Door Size Ft. In. (meters)	NORTON CATALOG NUMBER			
	MASTER UNIT CLOSER-HOLDER		TANDEM UNITS	
	INFINITE HOLD-OPEN	SELECTIVE HOLD-OPEN	INFINITE HOLD-OPEN	SELECTIVE HOLD-OPEN
3'-4" (1.00)	7213MPSI	7213MPSS	7213MPTI	7213MPTS
3'-8" (1.10)	7214MPSI	7214MPSS	7214MPTI	7214MPTS
4'-0" (1.20)	7215MPSI	7215MPSS	7215MPTI	7215MPTS

*Minimum door size is 2'-4" (.70 M).

Electrical Data

TYPE OF UNIT & CATALOG NUMBERS	NUMBER POWER INPUT LINES* (PAIRS)	OPERATING VOLTAGE	AMPERAGE DRAW SOLENOID COILS (AMPERES)	(CAN BE) USED IN CONJUNCTION WITH MASTER UNIT
SLAVE 7210MPSI SLAVE 7210MPSS	1	(INPUT) 24VAC/DC for Detection Input AND 120VAC for Solenoid Coil Input	.070@ 24VDC	7210MPDI-24 7210MPDI-120 7210MPDS-24 7210MPDS-120
TANDEM 7210MPSI TANDEM7210MPSS	1	120VAC	.035@ 24VDC	7210MPDI-240 x120 7210MPDS-240 x120

Maximum/Minimum Operating Voltage Parameters: +10%; -15%

Rigid Slide Arm Series 7210

Double Egress Slide Arm (Handed) Series 7250

Norton®

Yale Security Inc.

SERIES 7220/7230 MASTER UNITS

Push (Stop) Side Mounting Double Lever Arm

Master Units with Integral Smoke Detector
- **Series 7220MPDI/7230MPDI : Infinite Hold-Open**
- **Series 7220MPDS/7230MPDS : Selective Hold-Open**

Executive™ Door Holder/Release
- **Series 7220RFI/7230RFI: Infinite Hold-Open**
- **Series 7220RFS/7230RFS: Selective Hold-Open**

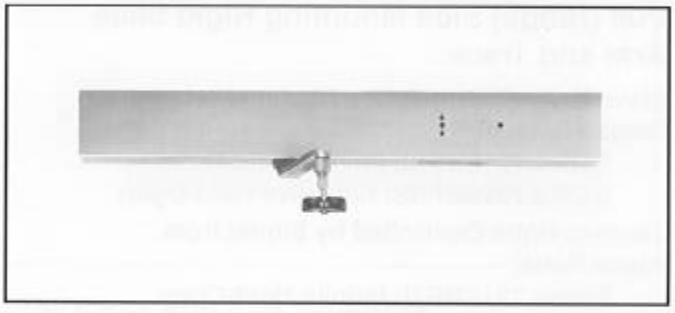

Single Doors

Master Units with Integral Smoke Detector: Both Series 7220MPDI/7230MPDI or Series 7220MPDS/7230MPDS are self- contained and can be installed to control a single door.

Executive™ Door Holder/Release: both Series7220RFI/7230RFI and Series 7220RFS/7230RFS are self-contained and can be installed to control a single door.

Pairs of Doors

Master Unit x Slave Unit: Smoke Detector in the Master Unit controls its own closer-holder solenoid and the solenoid in the Slave Unit.

Master Unit x Tandem Unit: Smoke Detector in the Master Unit signals conditions (Stand-by, Trouble/Alarm) to an alarm systems panel. This panel controls the signal to the hold-open solenoids in both the Master Unit and the Tandem Unit.

Executive Door Holder x Slave Unit: Consult the factory for details of this installation.

These Closer-Holders are surface mounted to the Push (stop) side frame face. The standard mounting for these units requires a minimum ceiling clearance of 3-1/2" (89mm). **Where ceiling clearance is between 2" and 3-1/2" (51mm and 89mm), the standard backplate for the Series 7220 or Series 7230 can be inverted to allow for a a drop application.** Use of a No. 7299 decorative backplate is recommended to conceal the exposed mounting holes on the standard backplate. Different mounting dimensions are required for the drop application. The double lever arm mounts directly to the door. These units can be installed to accommodate door openings to 180° with a 170° maximum hold-open point.

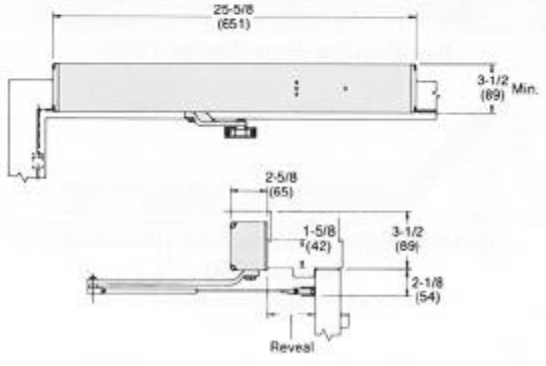

Door Sizes and List Numbers

Maximum* Door Size Ft. In. (meters)	MASTER UNIT CLOSER-HOLDER		EXECUTIVE DOOR HOLD/RELEASE		MAXIMUM DEGREE OF DOOR OPENING	REVEAL RANGE INCHES (MILLIMETER)
	INFINITE HOLD-OPEN	SELECTIVE HOLD-OPEN	INFINITE HOLD-OPEN	SELECTIVE HOLD-OPEN		
3'-6" (1.10)	7223MPDI	7223MPDS	7223RFI	7223RFS	180°	2 3/4-4 (70-102)
					165°	4-7 (102-179)
	7233MPDI	7233MPDS	7233RFI	7233RFS	180°	4-7 (102-179)
4'-0" (1.20)	7224MPDI	7224MPDS	7224RFI	7224RFS	180°	2 3/4-4 (70-102)
					165°	4-7 (102-179)
	7234MPDI	7234MPDS	7234RFI	7234RFS	180°	4-7 (102-179)

Minimum* Door Size Ft. In. (meters)	FOR DOOR OPENING OF
2'4" (.70)	180°
2'2" (.65)	100° to 180°

Electrical Data Master Units

MASTER UNIT CATALOG NUMBER	NUMBER POWER INPUT LINES* (PAIRS)	OPERATING VOLTAGE (INPUT)	AMPERAGE DRAW (AMPERES)			(CAN BE) USED IN CONJUNCTION WITH MASTER UNIT
			SMOKE DETECTOR		SOLENOID COIL	
			STANDBY	ALARM		
7220MPDI-24 7230MPDI-24	1	24VAC/DC	.016 @ 24VDC	.035 @ 24VDC	.070 @ 24VDC	Slave Unit 7220MPSI Slave Unit 7230MPSI
7220MPDS-24 7230MPDS-24						Slave Unit 7220MPSS Slave Unit 7230MPSS
7220MPDI-120 7230MPDI-120	1	120VAC			.070 @ 24VDC	Slave Unit 7220MPSI Slave Unit 7230MPSI
7220MPDS-120 7230MPDS-120						Slave Unit 7220MPSS Slave Unit 7230MPSS
7220MPDI-240x120 7230MPDI-240x120	2	24VAC/DC			.035 @ 24VDC	Tandem Unit 7220MPTI Tandem Unit 7230MPTI
7220MPDS-240x120 7230MPDS-240x120						Tandem Unit 7220MPTS Tandem Unit 7230MPTS

Electrical Data Door Holder/Release

EXECUTIVE DOOR HOLDER/RELEASE CATALOG NUMBER	NUMBER POWER INPUT LINES* (PAIRS)	OPERATING VOLTAGE (INPUT) 24VDC	AMPERAGE DRAW (AMPERES)	
			SOLENOID COIL	INTERRUPTING SWITCH
7220RFI-120 7230RFI-120	1	120VAC	.070 @ 24VDC	.015@ 210VAC
7220RFS-120 7230RFS-120	1			

*Pairs of input lines required to supply Operating Voltage or Voltages to the Unit. Pairs listed do not include signal wires to Alarm Panels nor control wires to other units' solenoids. Maximum/Minimum Operating Voltage Parameters: +10%; -15%

Norton®

Yale Security Inc.

SERIES 7220/7230 SLAVE/TANDEM UNITS

Push (Stop) Side Mounting Double Lever Arm

Slave Units Controlled by Master Unit Smoke Detector

- **Slave Unit Series7220MPSI/7230MPSI: Infinite Hold-Open**
- **Slave Unit Series 7220MPSS/7230MPSS: Selective Hold-Open**

Tandem Units Controlled by Signal from Alarm Panel

- **Tandem Unit Series 7220MPT/7230MPTI: Infinite Hold-Open**
- **Tandem Unit Series7220MPTS/7230MPTS: Selective Hold-Open**

Pairs of Doors

Master Unit x Slave Unit: Smoke Detector in the Master Unit controls the closer-holder solenoids in both the Master Unit and the Slave Unit.

Master Unit x Tandem Unit: Smoke Detector in the Master Unit signals conditions (Stand-by, Trouble/Alarm) to an alarm systems panel. This panel controls the signal to the closer-holder solenoids in both the Master Unit and the Tandem Unit.

These Closer-Holders are surface mounted to the Push (stop) side frame face. The standard mounting for these units requires a minimum ceiling clearance 3-1/2" (89mm). **Where ceiling clearance is between 2" and 3-1/2" (51mm and 89mm) the standard backplate for 7220 Series or 7230 Series can be inverted to allow for a drop application.** Use of a No. 7299 decorative backplate IS recommended to conceal the exposed mounting holes on the standard backplate. Different mounting dimensions are required for the drop application. The double lever arm mounts directly to the door. These units can be installed to accommodate door openings to 180° with a 170° maximum hold-open point.

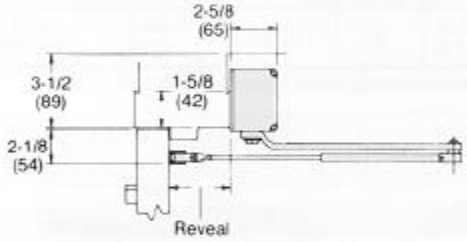

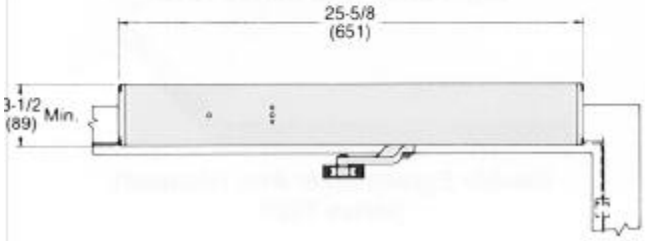

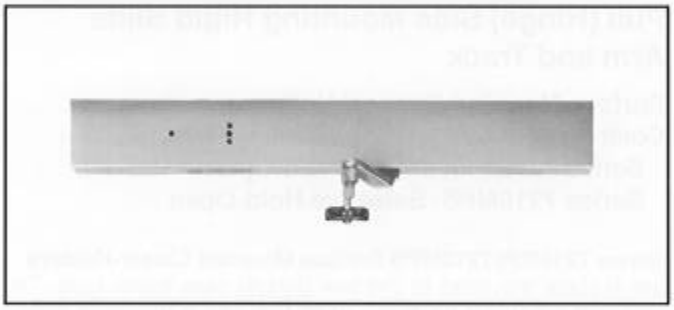

Door Sizes and Catalog Numbers

MAXIMUM DOOR SIZE FT. IN. (METERS)	NORTON CATALOG NUMBER				MAXIMUM DEGREE OF DOOR OPENING	REVEAL RANGE INCHES (MILLIMETERS)
	SLAVE UNITS		TANDEM UNITS			
	INFINITE HOLD-OPEN	SELECTIVE HOLD-OPEN	INFINITE HOLD-OPEN	SELECTIVE HOLD-OPEN		
3'-6" (1.10)	7223MPSI	7223MPSS	7223MPTI	7223MPTS	180°	2 3/4-4 (70-102)
					165°	4-7 (102-179)
	7233MPSI	7233MPSS	7233MPTI	7233MPTS	180°	4-7 (102-179)
4'-0" (1.20)	7224MPSI	7224MPSS	7224MPTI	7224MPTS	180°	2 3/4-4 (70-102)
					165°	4-7 (102-179)
	7234MPSI	7234MPSS	7234MPTI	7234MPTS	180°	4-7 (102-179)

Electrical Data

TYPE OF UNIT & CATALOG NUMBER	NUMBER POWER INPUT LINES* (PAIRS)	OPERATING VOLTAGE (INPUT)	AMPERAGE DRAW SOLENOID COIL (AMPERES)	(CAN BE) USED IN CONJUNCTION WITH MASTER UNIT
SLAVE 7220MPSI SLAVE 7230MPSI	1	24VDC (ONLY) 24VAC/DC SUPPLIED FROM MASTER UNIT	.070 @ 24VDC	7220MPDI-24 7230MPDI-24
				7220MPDI-120 7230MPDI-120
SLAVE 7220MPSS SLAVE 7230MPSS				7220MPDS-24 7230MPDS-24
				7220MPDS-120 7220MPDS-120
TANDEM 7220MPTI TANDEM 7230MPDI	1	120VAC	.035 @ 24VDC	7220MPDI-240x120 7230MPDI-240x120
TANDEM 7220MPTS TANDEM 7230MPTS				7220MPDS-240x120 7230MPDS-240x120

Maximum/Minimum Operating Voltage Parameters: +10%; -15%

MINIMUM DOOR SIZE FT. IN. (METERS)	FOR DOOR OPENING OF
2'-4" (.70)	100°
2'-2" (.65)	100° TO 180°

Norton®

Yale Security Inc.

SERIES 7210/7250 SUPPORT UNITS SURFACE MOUNTED

Pull (Hinge) Side Mounting Rigid Slide Arm and Track

Surface Mounted Support Units
Controlled Remotely by Area/Ceiling Detectors
Series 7210MPI: Infinite Hold-Open
Series 7210MPS: Selective Hold-Open

Series 7210MPI/7210MPS Surface Mounted Closer-Holders are surface mounted to the pull (hinge) side frame face. The standard mounting for these units requires a minimum ceiling clearance of 4" (102mm) and a maximum reveal of 1/8" (3mm).† The slide track mounts directly to the door.

Units can be installed as shipped to accommodate doors opening to 180° with a maximum hold-open point of 175°. The buffer block assembly in the track will accommodate doors opening to 125°. An auxiliary stop is required for doors opening beyond 125°.

The Series 7210MPI/7210MPS are intended for use with compatible U.L. listed ceiling alarm detection equipment.

†Double Egress Frames (Deep Reveals): Where the pull (hinge) side frame reveal exceeds 1/8" (3mm), a special slide arm is available to order. This arm will accommodate frame reveals in excess of 1/8" (3mm) up to 3" (76mm) with a maximum allowable door swing of 110°. Order Series 7250MPI or 7250MPS.

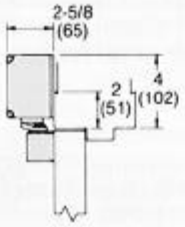

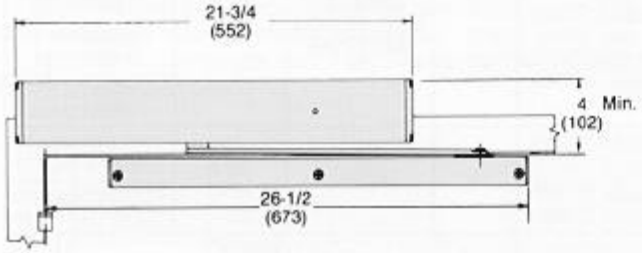

1/8" (3mm) Maximum Frame Reveal with Standard Arm†

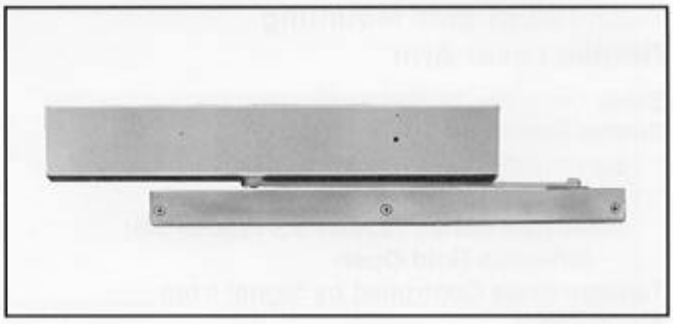

Door Sizes and List Numbers

MAXIMUM* DOOR SIZE FT. IN. (METERS)	NORTON CATALOG NUMBER SURFACE MOUNTED	
	INFINITE HOLD-OPEN	SELECTIVE HOLD-OPEN
3'-4" (1.00)	7213MPI	7213MPS
3'-8" (1.10)	7214MPI	7214MPS
4'-0" (1.20)	7215MPI	7215MPS

*Minimum door size is 28" (.70M).

Electrical Data

SUPPORT UNIT CATALOG NUMBER SURFACE MOUNTED	NUMBER POWER INPUT LINES* (PAIRS)	OPERATING VOLTAGE (INPUT)	AMPERAGE DRAW SOLENOID COIL (AMPERES)	(CAN BE) USED IN CONJUNCTION WITH
7210MPI-24 7210MPS-24	1	24VAC/DC	.070 @ 24VAC/DC	COMPATIBLE SMOKE DETECTION EQUIPMENT
7210MPI-120 7210MPS-120	1	120VAC	.035 @ 120VAC	COMPATIBLE SMOKE DETECTION EQUIPMENT

Maximum/Minimum Operating Voltage Parameters: +10%, -15%

Rigid Slide Arm Series 7210

Double Egress Slide Arm (Handed) Series 7250

Norton®

Yale Security Inc.

SERIES 7220/7230 SUPPORT UNITS

Push (Stop) Side Mounting Double Lever Arm

Units Controlled Remotely by Area/Ceiling Detectors

Support Unit Series 7220MPI/7230MPI: Infinite Hold-Open

Support Unit Series 7220MPS/7230MPS: Selective Hold-Open

These Closer-Holders are surface mounted to the Push (stop) side frame face. The standard mounting for these units requires a minimum ceiling clearance of 3-1/2" (89mm). **Where ceiling clearance is between 2" and 3-1/2" (51mm and 89mm), the standard backplate for the 7220 Series or 7230 Series can be inverted to allow for a drop application.** Use a No. 7298 decorative backplate is recommended to conceal the exposed mounting holes on the standard backplate. Different mounting dimensions are required for the drop application. The double lever arm mounts directly to the door. These units can be installed to accommodate door openings to 180° with a 170° maximum hold/open point.

The Series 7220MPI/7230MPI and 7220MPS/7230MPS, with double lever arm, are intended for use with compatible U.L. listed detection equipment.

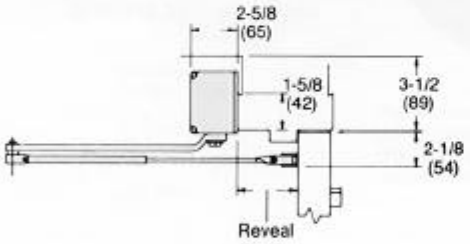

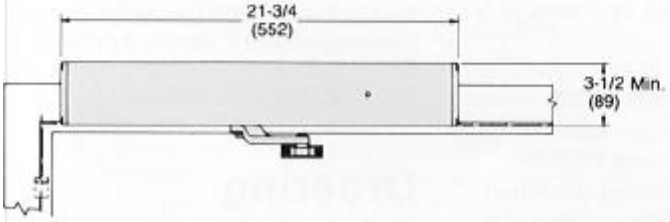

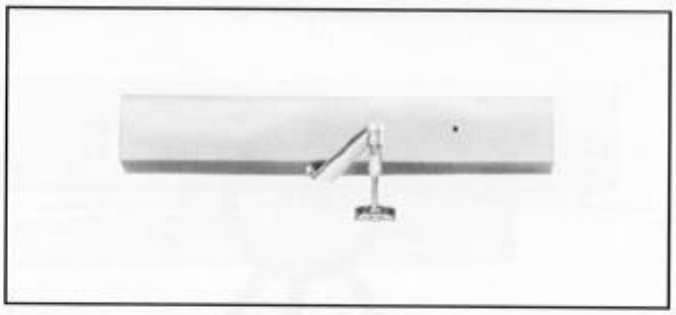

Door Sizes and List Numbers

MAXIMUM DOOR SIZE FT. IN. (METERS)	NORTON CATALOG NUMBER: INFINITE HOLD-OPEN	NORTON CATALOG NUMBER: SELECTIVE HOLD-OPEN	MAXIMUM DEGREE OF DOOR OPENING	REVEAL RANGE INCHES (MILLIMETERS)
3'-6" (1.10)	7223MPI	7223MPS	180°	2 3/4-4 (70-102)
			165°	4-7 (102-179)
	7233MPI	7233MPS	180°	4-7 (102-179)
4'-0" (1.20)	7224MPI	7224MPS	180°	2 3/4-4 (70-102)
			165°	4-7 (102-179)
	7234MPI	7234MPS	180°	4-7 (102-179)

Electrical Data

SUPPORT UNIT CATALOG NUMBER	NUMBER POWER INPUT LINES* (PAIRS)	OPERATING VOLTAGE (INPUT)	AMPERAGE DRAW SOLENOID COIL (AMPERES)	(CAN BE) USED IN CONJUNCTION WITH
7220MPI-24 7230MPI-24 7220MPS-24 7230MPS-24	1	24VAC/DC	.070 @ 24VAC/DC	COMPATIBLE SMOKE DETECTION EQUIPMENT
7220MPI-120 7230MPI-120 7220MPS-120 7230MPS-120	1	120VAC	.035 @ 120VAC	COMPATIBLE SMOKE DETECTION EQUIPMENT

Maximum/Minimum Operating Voltage Parameters: +10%; -15%

Norton®

Yale Security Inc.

SERIES 7240 CONNECTED FREE SWING RELEASING DEVICE

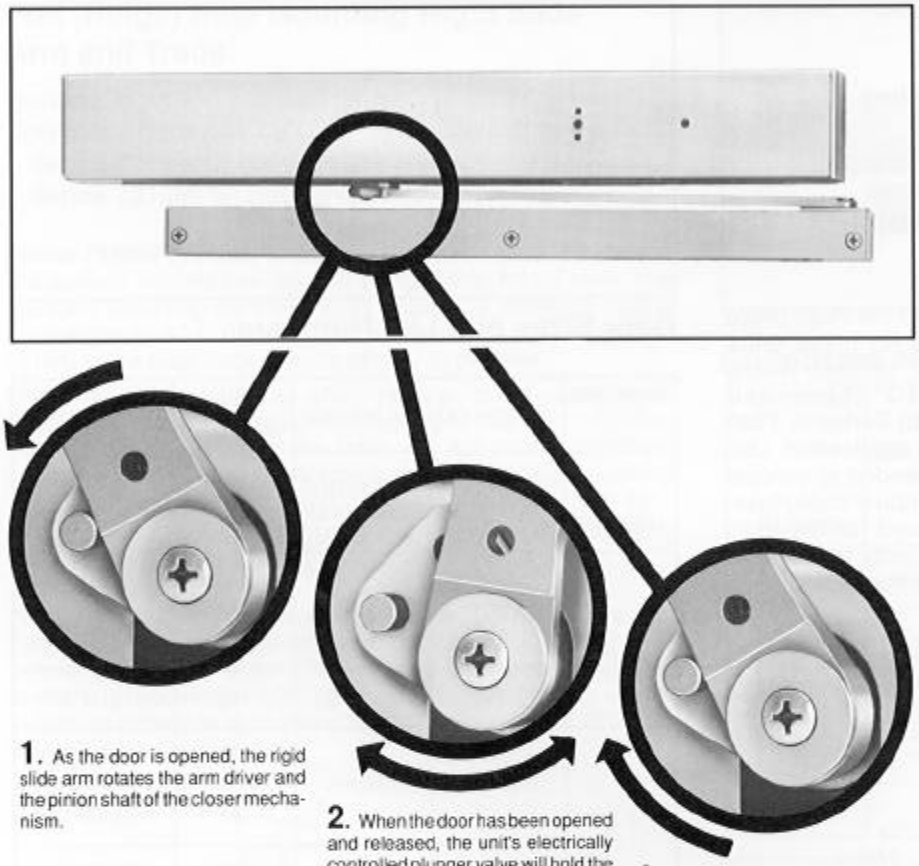

1. As the door is opened, the rigid slide arm rotates the arm driver and the pinion shaft of the closer mechanism.

2. When the door has been opened and released, the unit's electrically controlled plunger valve will hold the pinion shaft and arm driver at that degree of door opening. The door is then free to swing unhindered.

3. After Fire/Smoke detection alarm or any power interruption to the control, the pinion shaft and arm driver are released to close the door.

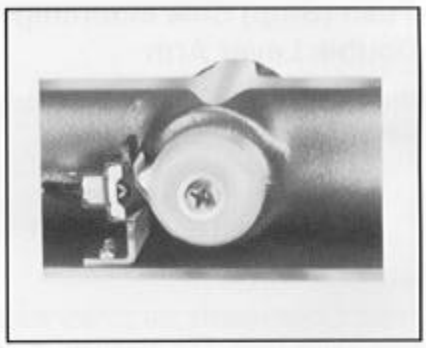

Optional Selective Hold-Open Switch and Cam: The Selective Hold-Open starting point is determined by a switch and adjustable cam assembly. The cam is attached to the upper pinion shaft by means of a machine screw. As the door is opened, the pinion shaft will rotate the cam and operate the switch to the "On" position to initiate hold-open. When the door is closed, the pinion cam will operate the switch to the "Off" position. The cam is factory set to operate at 80° of door opening. The cam can be easily field adjusted to operate at virtually any degree of door opening.

The Norton Connected Free Swing Arm Assembly provides convenient automatic closing fire door protection for the patients and staff of health care facilities.

An arm driver connected to the closer pinion drives the pinion when the door is opened and the slide arm rotates. When the unit is energized the pinion and arm driver are held in the position to which the door was initially opened, by means of a solenoid operated plunger valve.

The arm is connected to the pinion but is free to pivot. The door, in turn, is free to open, close or be set at any degree of opening unhindered by the closer spring.

When there is a Fire/Smoke alarm or any power interruption, the hold-open control valve is released, permitting the Connected Free Swing Arm Assembly to close the door.

Since there is no closer spring force on the door during the normal operation, patients, the handicapped and/or staff find the door easy to open, close or leave ajar. This is an ideal product for application in health care facilities, or other locations where it is desired to neutralize the effort required to open or close a door.

The Norton Connected Free Swing Arm Assembly is available for application with all Series 7200 Units. This top jamb, pull (hinge) side control with slide arm and track is for installation on patient room or similar doors.

The Connected Free Swing Arm is also available for application on the Executive Door Holder/Release.

U.L. Listed

Norton Series 7200 Closer Control with Connected Free Swing Arm is U.L. listed as a releasing device for Fire/Smoke Barrier doors.

Ordering Information

Order Master Unit 7240MPDI or Executive Door Holder/Release 7240RFI (closer size selected from page 4). Order Support Unit 7240MPI (closer size selected from page 8). Include voltage and hand of door.

Norton®

Yale Security Inc.

SERIES 7290 SUPPORT UNIT OVERHEAD CONCEALED

Pull (Hinge) Side Rigid Slide Arm and Track

Overhead Concealed Support Unit Controlled Remotely by Area/Ceiling Detectors
Series 7290MPI: Infinite Hold-Open
Series 7290MPS: Selective Hold-Open

Series 7290MPI/7290MPS Overhead Concealed Closer-Holders have the door closer and hold-open solenoid concealed in the header of the frame. Installation requires a 4" (102mm) high frame header. A 2" x 4" (51 mm x 1 02mm) dust/grout box and a removable frame stop, provided by the door and frame supplier, are required. The slide track is mortised in the door's top rail.

Units can be installed as shipped to accommodate doors opening to 180° with a maximum hold-open point of 175°. The buffer block assembly in the track will accommodate doors opening to 125°. An auxiliary stop is required for doors opening beyond 125°.

The Series 7290MP1/7290MPS are intended for use with compatible U.L. listed ceiling alarm detection equipment.

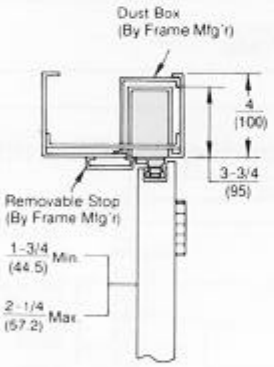

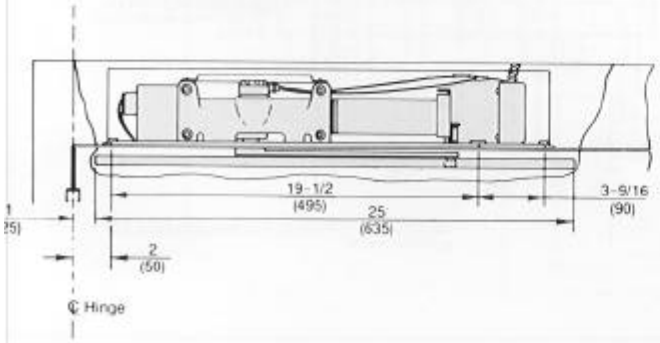

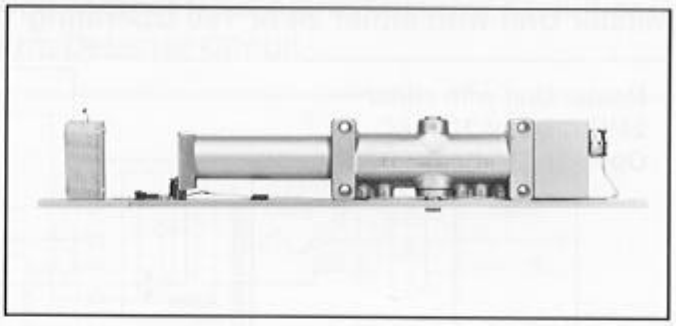

Door Sizes and List Numbers

MAXIMUM* DOOR SIZE FT. IN. (METERS)	NORTON CATALOG NUMBER OVERHEAD CONCEALED	
	INFINITE HOLD-OPEN	SELECTIVE HOLD-OPEN
2'-8" (0.80)	7294MPI	7294MPS
3'-2" (1.00)	7295MPI	7295MPS
4'-0" (1.20)	7296MPI	7296MPS

*Minimum door size is 28" (.70M).

Electrical Data

SUPPORT UNIT CATALOG NUMBER OVERHEAD CONCELAED	NUMBER POWER INPUT LINES* (PAIRS)	OPERATING VOLTAGE (INPUT)	AMPERAGE DRAW SOLENOID COIL (AMPERES)
7290MPI-24 7290MPS-24	1	24VAC/DC	.070 @ 24VAC/DC
7290MPI-120 7290MPS-120	1	120VAC	.035 @ 120VAC

Maximum/Minimum Operating Voltage Parameters: + 10%; -15%.

SERIES 7200 WIRING

Master Unit with either 24 or 120 Operating Voltage

Master Unit with either 24VAC/DC or 120VAC Operating Voltage

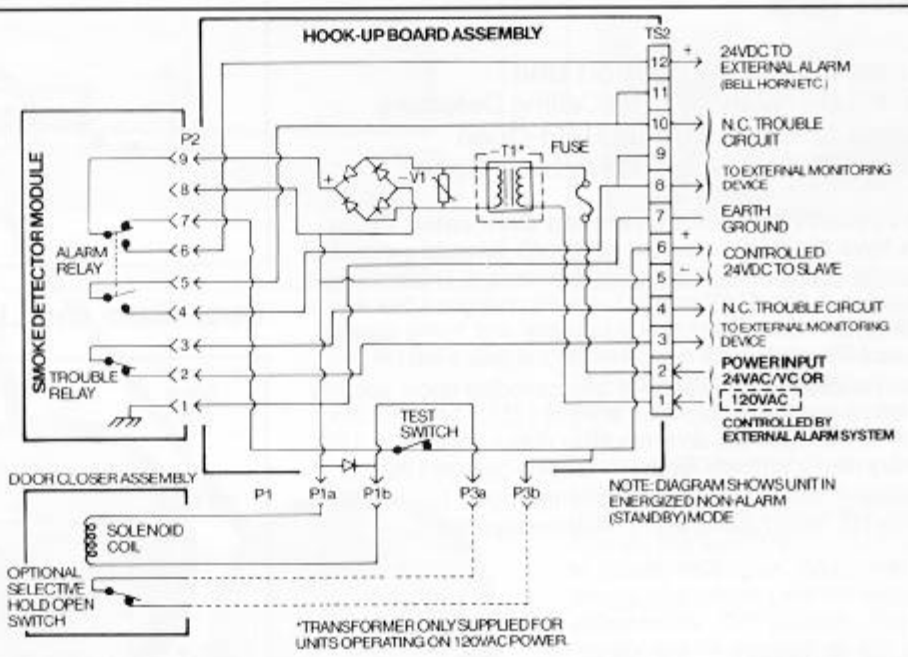

Master Unit with either 24 or 120 Operating Voltage

Master Unit with both 24VAC/DC Smoke Detector Input and 120VAC Solenoid Coil Input

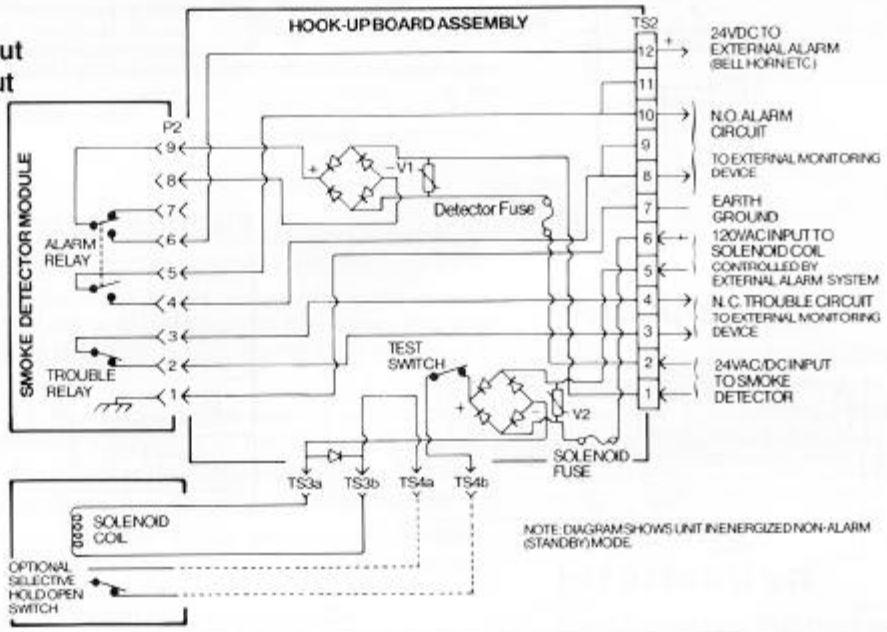

Notes:

All relay contacts rated 0.5 Amps @ 125VAC 60Hz; 2.0 Amps @ 30VDC.

Detector Sensitivity is factory set and can only be recalibrated by factory authorized personnel.

Detector Environmental Limits: 100°F (38°C); 95% Relative Humidity. Cannot be installed in environments with a high concentration of corrosive vapors or where air velocity exceeds 300 ft. per min. (91 M./min.).

Maximum wire size for Input/System Terminal Strip is 14 A.W.G.

Maximum/Minimum Operating Voltage Parameters: +10%, -15%.

SERIES 7200 WIRING

Support Unit with either 24VAC/DC or 120VAC Power Input from Alarm/Detector Circuit or Tandem Unit with 120VAC Power Input from Alarm/Detector Circuit

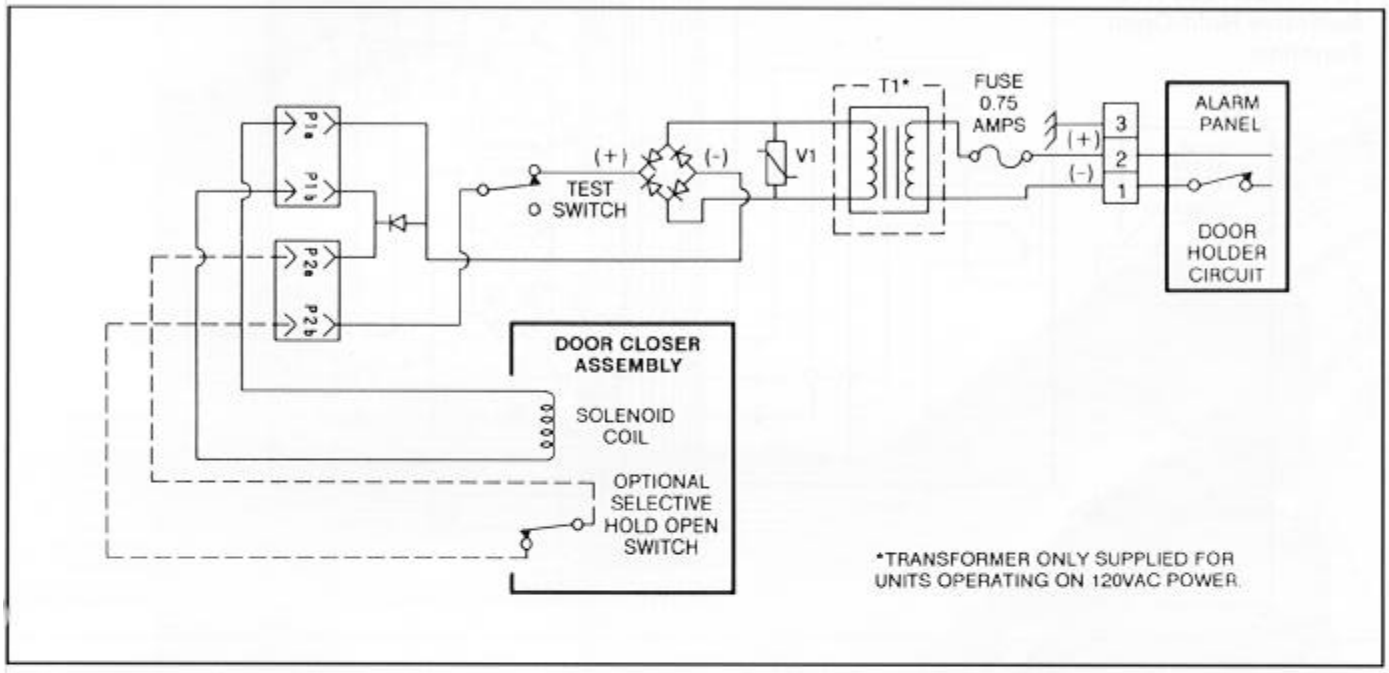

Slave Unit with 24VDC Input from Master Unit

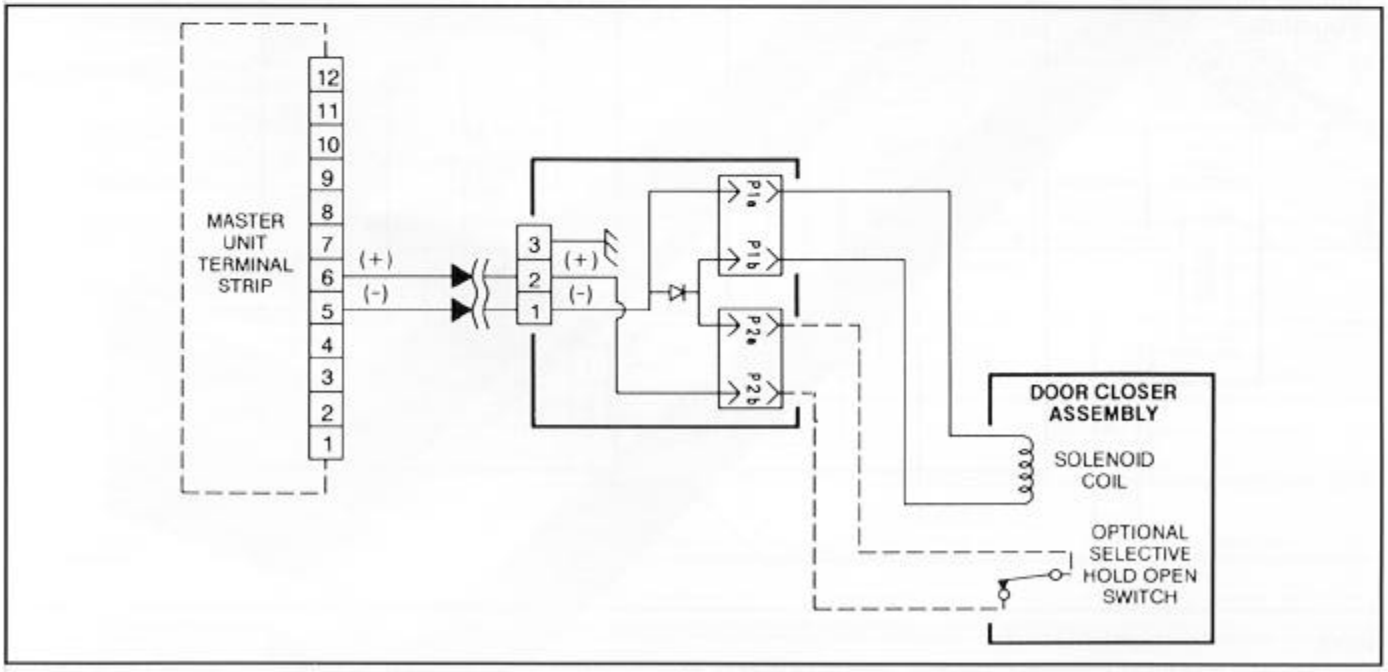

Notes:
Maximum wire size for Input/System Terminal Strip is 14 A.W.G.
Maximum/Minimum Operating Voltage Parameters: +10%, -15%.

Norton®

Yale Security Inc.

SERIES 7200 WIRING

Executive™ Door Holder/Release

7210/7220/7230 RFS Selective Hold-Open Function

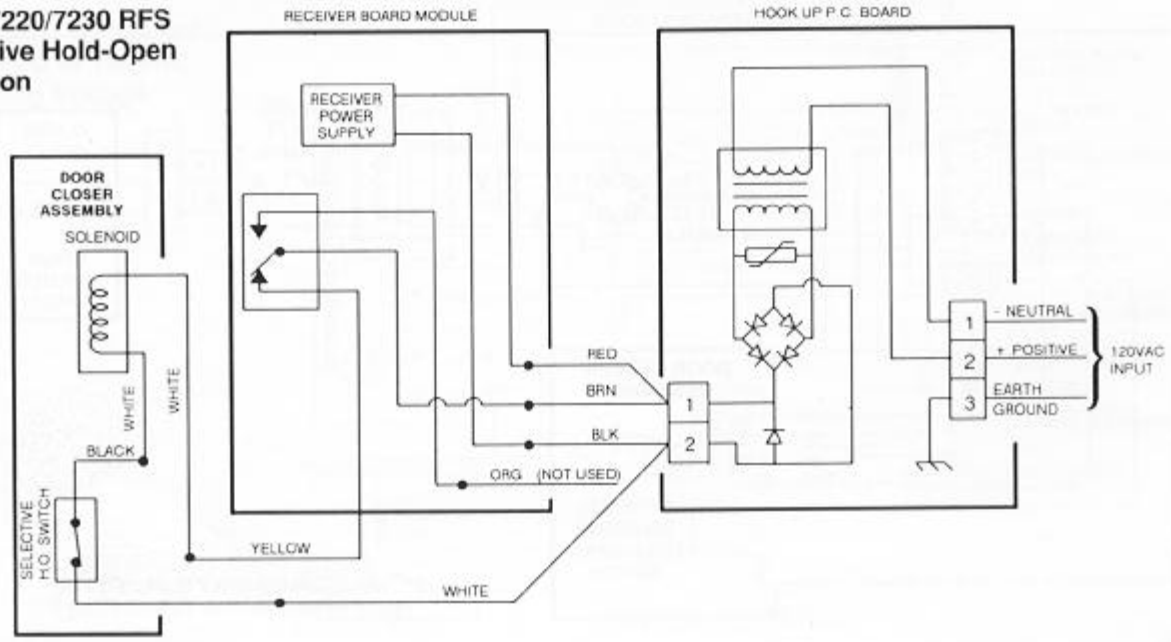

7210/7220/7230 RFI Infinite Hold-Open Function

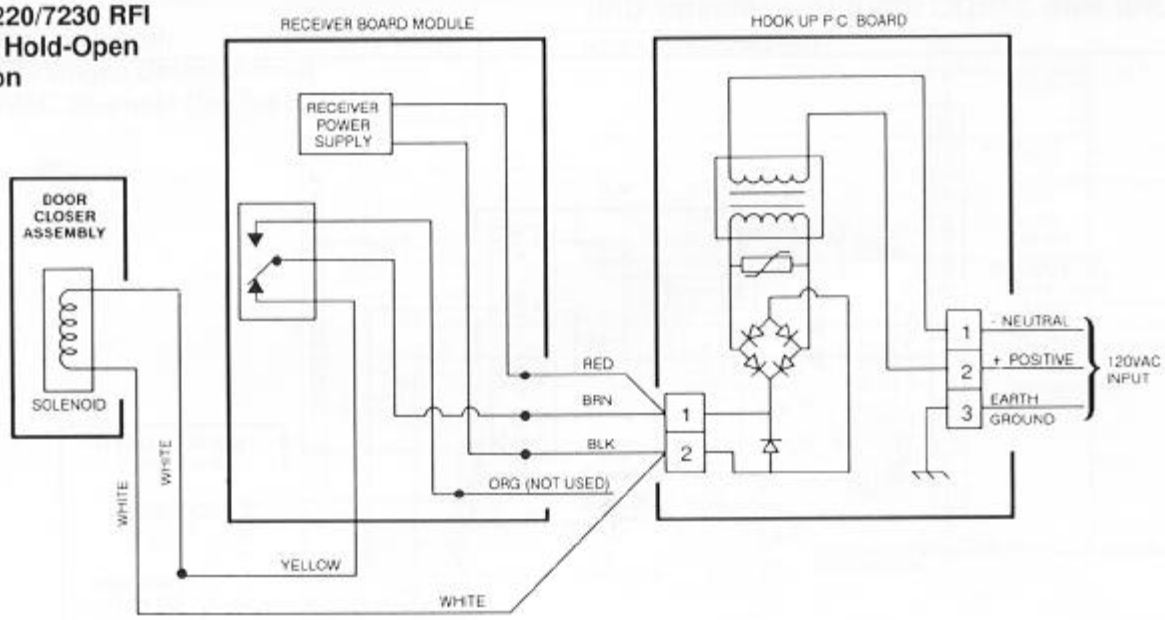

Notes:

Maximum wire size for Input/System Terminal Strip is 14 A.W.G. Maximum/Minimum Operating Voltage Parameters: +10%, -15%.

For more information contact your Norton Representative or Norton® Door Controls, P.O. Box 25288, Charlotte, NC 28229-8010. Telephones: (800) 438-1951. In North Carolina: (704) 283-2101. FAX: (704) 289-2875. Telex: 572356. In Canada, 3160 Orlando Drive, Mississauga, Ontario, Canada L4V 1R5. Telephone: (416) 672-6220. FAX: (416) 672-9022. WATS: (800) 461-3007.

These materials are protected under U.S. copyright laws. All contents current at time of publication. Norton reserves the right to change availability of any item in this catalog, its design, construction and/or its materials.

#43063-C-3.0-6/99U