Norton®

Since 1880 • The American Original™

9300BC Series Light Commercial Door Closers

An ASSA ABLOY Group company

ASSA ABLOY

GENERAL INFORMATION

The 9300BC is a light commercial door closer designed for exterior and interior doors such as condominiums, apartments, motels or hotels.

- Spring size 2, 3, 4, 5
- Separate and independent valve for sweep speed and latch speed
- Adjustable backcheck standard
- Regular and top jamb mount
- Parallel mount optional
- Friction hold open arm optional
- UL listed and compliant with UL10C for positive pressure
- 5-year limited warranty
- ANSI/BHMA A156.4 Grade 3

Note: See the Norton® Series 1600 catalog for ADA compliance of heavy-duty applications.

BUILDERS HARDWARE MANUFACTURES ASSOCIATION INC. BHMA CERTIFIED

Table of Contents

Overview 2
How to Order 3
Applications 4
Features / Finishes 5
Accessories 6
Technical Details 7-8
Parts List 9-11

HOW TO ORDER

No Prefix - 9300 series regular and top jamb mount **P** - 9300 parallel arm only	Defines closer series	"2" -ANSI size 2 "3" -ANSI size 3 "4" -ANSI size 4 "5" -ANSI size 5	Adjustable backcheck cushioning (Standard)	**H -** Hold open arm (Optional)
P **PREFIXES**	**930** **FIRST, SECOND & THIRD DIGIT**	**2** **FOURTH DIGIT** **Closer Power Sizing**	**BC**	**H** **SUFFIX**

COMPLIANCE STANDARDS

All series 9300BC closers comply with ANSI/BHMA A156.4 Grade 3 Specifications. All Norton® series 9300BC closers with non-hold open arms are listed by Underwriters' Laboratories UL for labeled fire doors. This includes compliance to UL10C and UBC-72 (1997) for 3-hour assemblies. The product is manufactured in an ISO 9001 facility. These closers are also listed by the New York City Board of Standards and Appeals; Materials and Equipment Acceptance Division.

APPLICATIONS

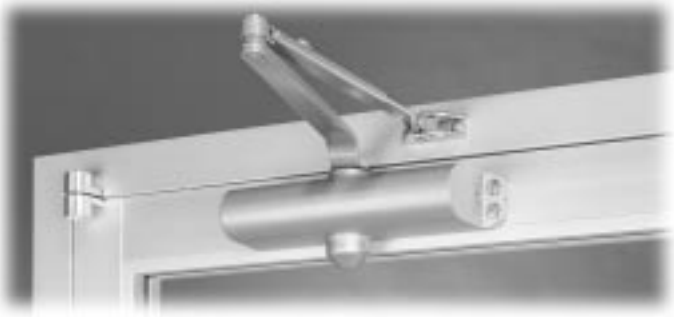

Regular Arm

This is the only pull-side application for the 9300BC series door closer. It is the most power-efficient application for a door closer. Sufficient frame, door and/or ceiling clearance must be considered.

Since the arm assembly projects directly out from the frame, this application may present an aesthetics issue or be prone to vandalism.

Parallel Arm

This application provides the most appealing design appearance for the 9300BC series door closer. It is on the push side of the door and the arm assembly extends almost parallel to the door. In the closed position, there is very little or no hardware projecting beyond the frame face in most situations.

Due to the geometry of the arm it is approximately 25% less power efficient than a regular arm application.

The entire closer and arm assembly are mounted below the frame stop, requiring a top rail clearance on the door of 5" (127mm), without using a drop plate. A 9388 drop plate requires a top rail clearance of just 2-5/8" (67mm).

Top Jamb

For efficiency reasons this application provides the best alternative to the regular arm application. There must be sufficient frame face and/or ceiling clearance for this application. It requires a top rail on the door of just 1-7/8" (48mm). This application provides the best door control for doors in exterior walls that swing out of a building. It will accommodate frame reveals to a maximum of 2-7/8" (73mm).

The entire door closer and arm assembly project from the frame, similar to the regular arm application, where matters of appearance can be of concern.

Norton®

FEATURES

Aluminum Alloy Housing
Closer bodies are constructed of a special aluminum alloy, carefully selected to accommodate interactive steel components and operating conditions.

Rack & Pinion Operation
Provides a smooth constant control of the door through its full opening and closing cycle. 180° door swing can be achieved when door, frame, hardware and arm function do not interfere.

Non-Handed
Pinion shaft extends vertically through the closer body in both directions. This permits the closer to be positioned on either right or left-hand doors for most applications.

Non-Critical Control Valves
All control valves for sweep speed, latch speed and backcheck cushioning are non-critical and are adjusted by a standard 1/8" (3mm) hex wrench.

Adjustable Backcheck Cushion Valve
Provides control of the door in the opening cycle, beginning at approximately 75° of door opening. It slows/cushions the door opening, when the door is forcibly opened beyond its pre-adjusted speed limitation.

Finishes
All door closers are painted in waterborne acrylics. All steel parts, mounting plates and brackets are powder coated. The closers will withstand 100 hours of salt spray. ANSI requires 25 hours.

Sprayed Finishes

Description	BHMA Designation	Complements the Following Finishes	Old Norton Designation
Aluminum	689	628, 625, 629, 630, 651, 652	AL
Statuary Bronze	690	640, 613	STAT
Dull Bronze	691	612, 637, 639	DB
Black	693	315	315
Medium Amber	694	312	312
Gold	696	605, 606, 632, 633	GB
Prime Coat (Beige)	600		SRI

Order by BHMA designation

Adjust Power Shoe
Supplied as standard for a 15% (±7-1/2%) power adjustment by relocating the forearm at the shoe, for regular arm and top jamb non-hold open installations.

OPTIONAL FEATURES

Hold Open Arm
Closer arm has adjustable hold open feature (90° to 180°). This arm is non-handed. Order by suffixing “H” to the catalog number.

Fasteners
All closers are shipped with self-drilling, self-tapping and machine screws.
- Sleeve nuts (SN) are available as an option for all closers, and should be used on steel doors to prevent dimpling or where proper door reinforcement has not been provided.
- Standard sleeve nuts are for 1-3/4" (44mm) doors. 1-3/8" (35mm) or 2-1/4" (57mm) door thicknesses are available and must be specified.
- Through bolts and grommet nuts (TBGN) are another fastener alternative for wood doors. Standard TBGN’s are for 1-3/4" (44mm) doors. 1-3/8" (35mm) or 2-1/4" (57mm) door thicknesses are available and must be specified.

TOP JAMB

Closer Mounting Plate

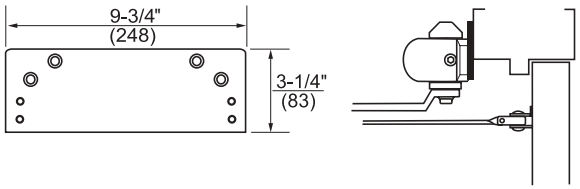

Top Jamb - #9388 Drop Plate: For use when the door closer interferes with the ceiling or the frame face is too narrow to mount a closer body. This drop plate can be used to mount a closer on a frame face as narrow as 1-1/2" (38mm).

PARALLEL ARM

Closer Mounting Plate

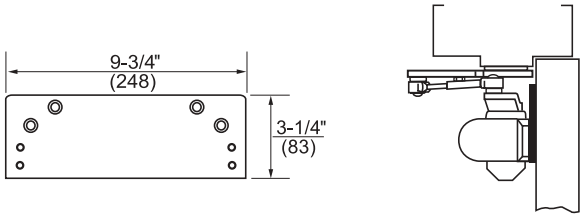

Parallel Arm - #9388 Drop Plate: For use where a narrow top rail prevents the closer from being mounted directly to the door surface. This drop plate can be used to mount a closer on a top rail as narrow as 2-5/8" (57mm).

Brackets for Non-Hold Open Arms

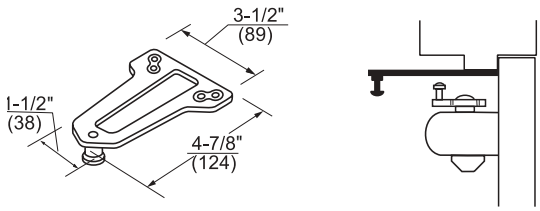

#9318A Soffit Plate: This soffit plate is supplied to permit parallel arm mounting. It can be mounted where the frame soffit is as narrow as 1" (25mm).

Brackets for Hold Open Arms

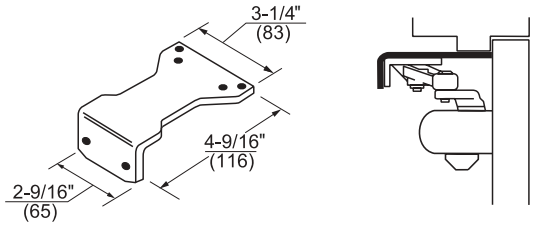

#9328H Adapter Plate: This adapter plate is supplied standard with parallel arm hold open closer. It can also be used to convert hold open arms for parallel arm installation. It can be mounted where the frame soffit is as narrow as 1" (25mm).

Norton®

REGULAR ARM

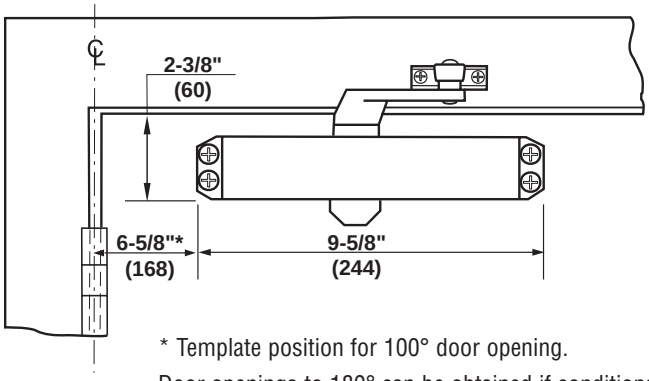

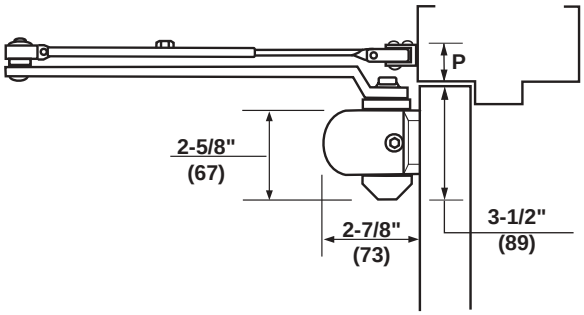

* Template position for 100° door opening.

Door openings to 180° can be obtained if conditions permit.

For selection of door closer sizing, see charts on page 8.

P Minimum Ceiling Clearance	
Non-Hold Open Inches (mm)	Hold Open Inches (mm)
1-1/2" (38)	1-5/8" (41)

Mounting holes on body are spaced centerline to centerline: 9-1/16" (230mm) horizontally x 3/4" (19mm) vertically.

TOP JAMB

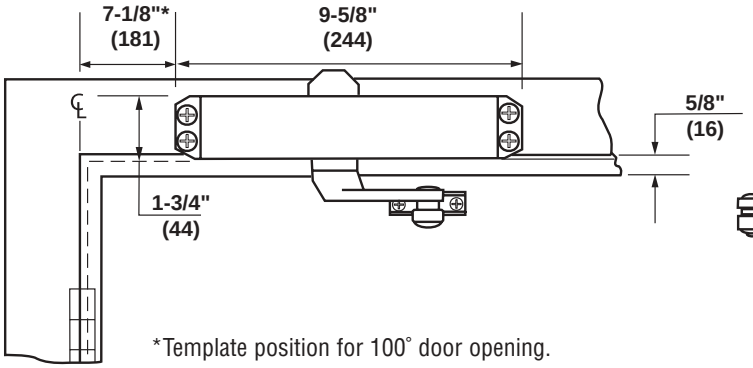

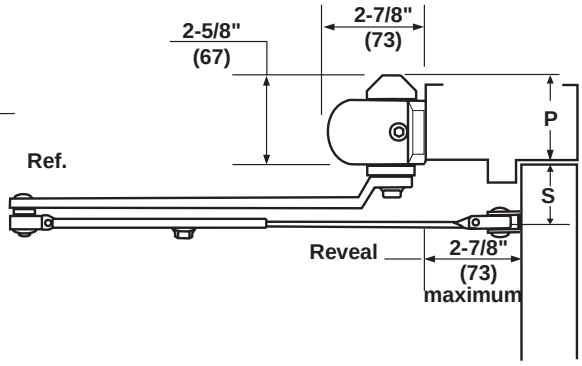

*Template position for 100° door opening.

For selection of door closer sizing, see charts on page 8.

P Minimum Ceiling Clearance		S Minimum Top Rail 5/8" (16mm) Frame Stop	
Without Drop Plate Inches (mm)	With 9388 Drop Plate Inches (mm)	Without Drop Plate Inches (mm)	With 9388 Drop Plate Inches (mm)
2-5/8" (67)	1-3/4" (44)	1-7/8" (48)	3-3/8" (86)

Mounting holes on body are spaced centerline to centerline: 9-1/16" (230mm) horizontally x 3/4" (19mm) vertically.

PARALLEL ARM

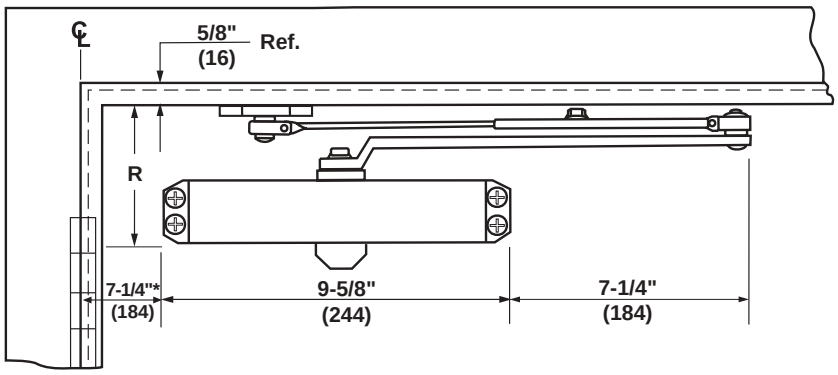

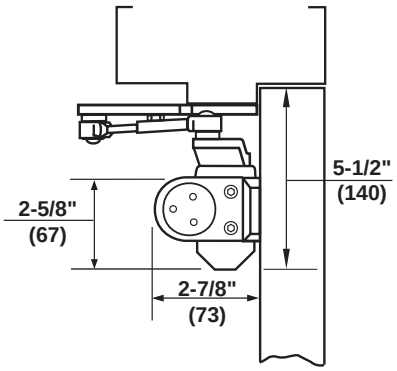

*Template position for 100° door opening.

Minimum Top Rail 5/8" (16) Frame Stop	
Without Drop Plate Inches (mm)	With 9388 Drop Plate Inches (mm)
5" (127)	2-5/8" (67)

Mounting holes on body are spaced centerline to centerline: 9-1/16" (230mm) horizontally x 3/4" (19mm) vertically.

DOOR CLOSER SIZE

Note: Door closing force is not adjustable. Correct size must be selected.

Interior Doors

Door Closer Size	Recommended Max. Door Width Inches (cm)		
	Regular Arm	Top Jamb	Parallel Arm
9302BC	34" (86)	34" (86)	32" (81)
9303BC	40" (102)	40" (117)	38" (97)
9304BC	48" (122)	48" (122)	46" (117)
9305BC	----	----	52 (132)

Exterior Doors

Door Closer Size	Recommended Max. Door Width Inches (cm)		
	Regular Arm	Top Jamb	Parallel Arm
9302BC	30" (76)	30" (76)	28" (71)
9303BC	34" (86)	34" (86)	32" (81)
9304BC	40" (102)	40" (102)	36" (91)
9305BC	48" (122)	48" (122)	42" (107)

All dimensions are for reference only and are in inches (mm) unless otherwise noted. Door sizing information is based on installation on standard weight doors, 7'0" (213cm) high x 1-3/4" (44mm) thick; hung on anti-friction hinges and operating under normal conditions. Doors in excess of 7'8" (234cm) high or 1-3/4" (44mm) thick, templated openings beyond 150° or doors subject to wind or draft conditions will generally require the next larger size closer.

Norton®

CLOSER BODY

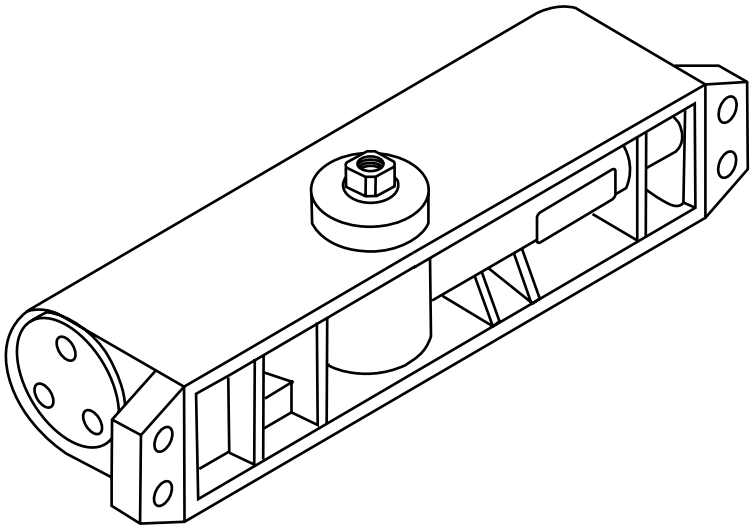

Model Number
9302BCLAP
9303BCLAP
9304BCLAP
9305BCLAP

NON-HOLD OPEN ARM ASSEMBLIES

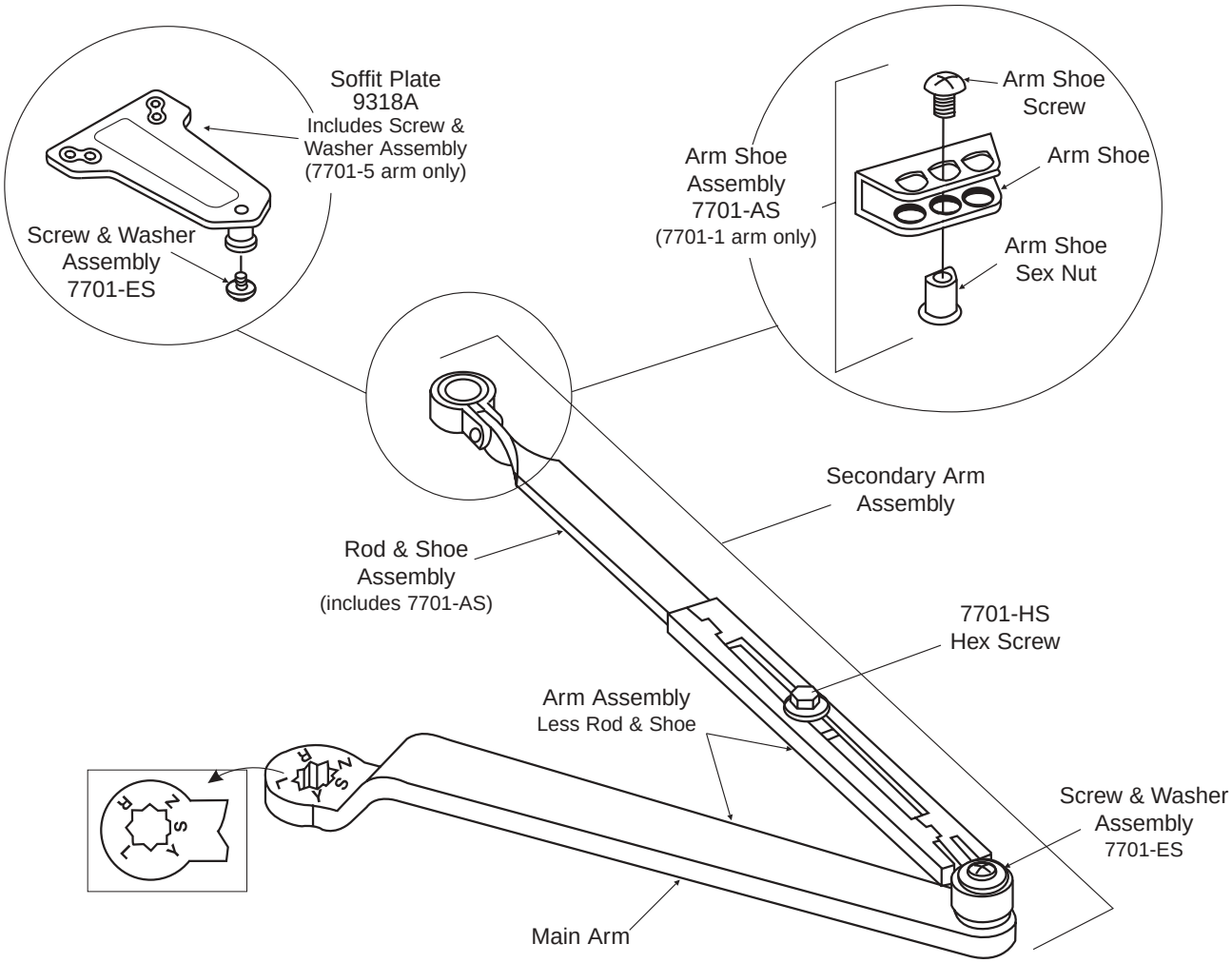

Closer Series	Complete Arm	Main Arm	Arm Assembly less Rod and Shoe	Secondary Arm Assembly	Rod & Shoe Assembly
9300BC	7701-1	7701-1M	7701-1W	7701-111	7701-11
P9300BC	7701-5			7701-115	7701-15

Norton®

HOLD OPEN ARM ASSEMBLIES

7701-13 Hold Open Bracket and Loop Assembly

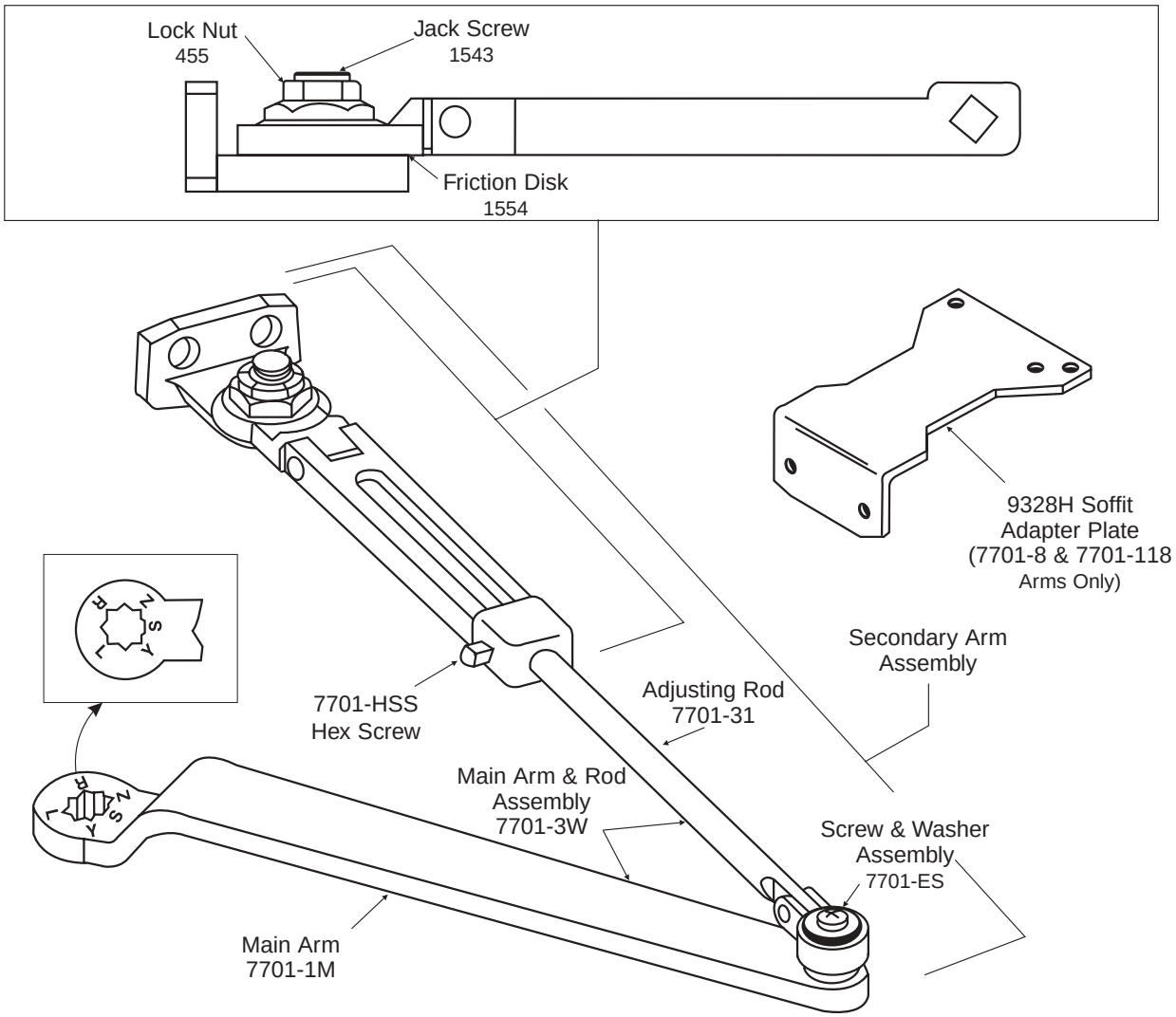

Closer Series	Complete Arm	Secondary Arm Assembly
9300BCH	7701-3	7701-113
P9300BCH	7701-8	7701-118

Norton®

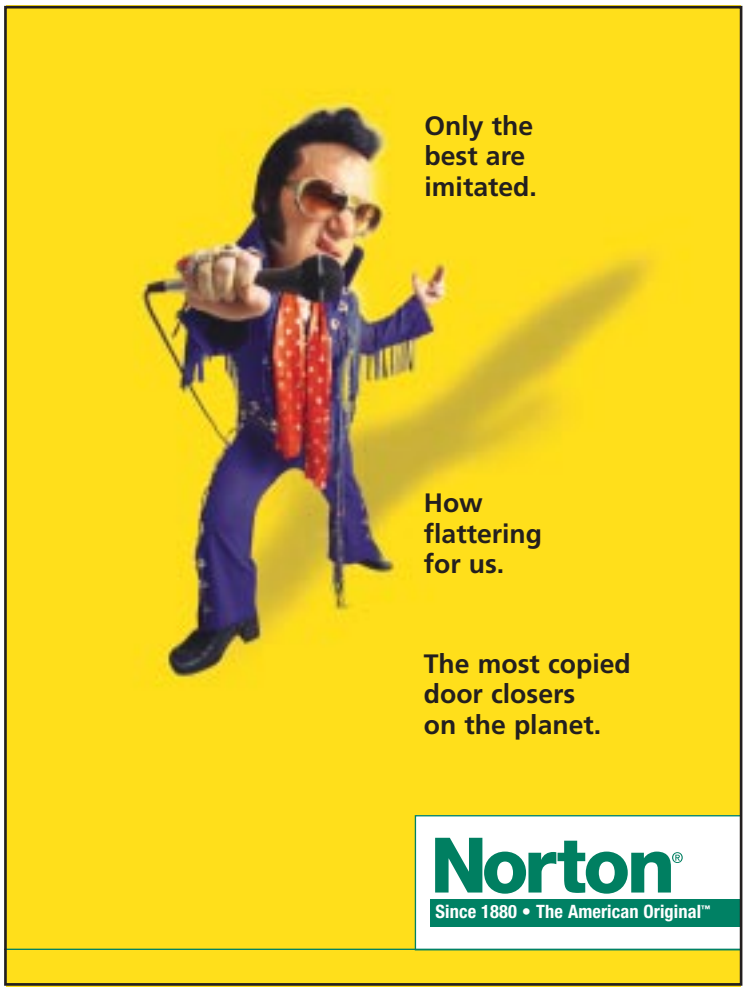

Norton Door Controls
1902 Airport Road
Monroe, NC 28110
Telephone: 1.800.438.1951
Fax: 1.800.338.0965

Yale-Corbin Canada Ltd
6940 Edwards Boulevard
Mississauga, Ontario, Canada L5T 2W2
Telephone: 1.800.461.3007
Fax: 1.800.461.8989

For a complete listing of products and applications please visit our web site.
www.nortondoorcontrols.com
www.yalecorbin.on.ca

Norton® closers...still proudly manufactured in the United States with more than 75% U.S. content.

Norton® is a registered trademark of Yale Security Inc. All contents current at time of publication. Yale Security Inc. reserves the right to change availability of any item in this catalog, its design, construction, and/or its materials. Other products brand names not referenced in this catalog may be trademarks or registered trademarks of their respective owners and are mentioned for reference purposes only. Copyright© 2001, 2004, Yale Security Inc. All rights reserved. These materials are protected under U.S. copyright laws.

The ASSA ABLOY Group is the world's leading manufacturer and supplier of locking solutions, dedicated to satisfying end-user needs for security, safety and convenience.

ASSA ABLOY

An ASSA ABLOY Group company

43090-MA-10.0-01/04R