FEATURES

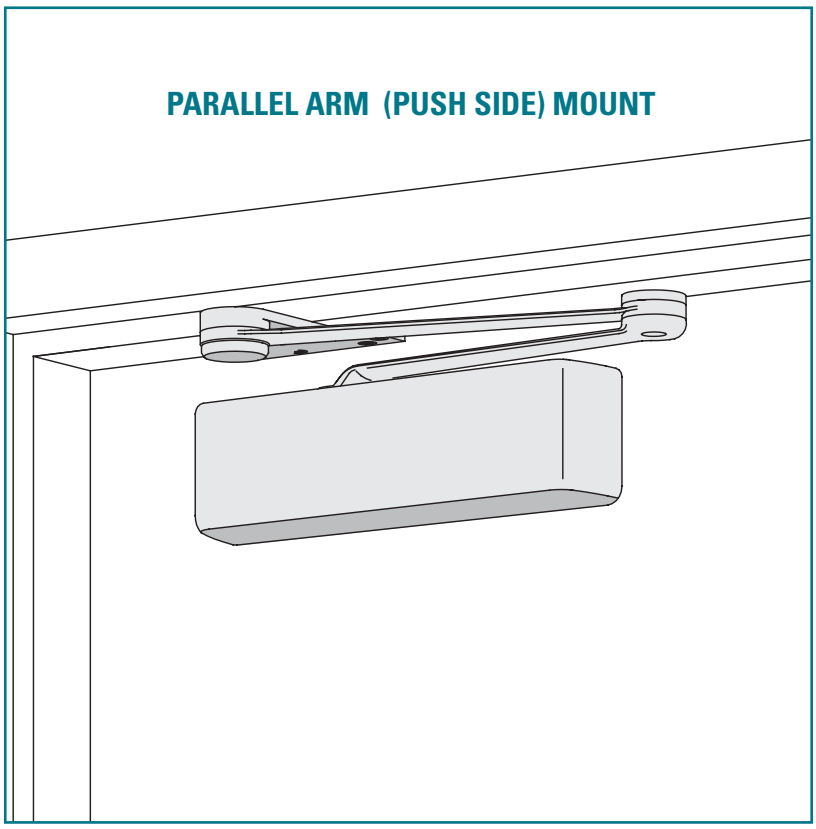

The 4210 SMOOTHEE® Series is a heavy duty, high security closer with special components to minimize tampering and vandalism . Forged steel parallel arms and heavy gauge metal security covers are designed for correctional, vandal prone, institutional and other high traffic applications. The closer has passed 10,000,000 cycles in independent testing.

A choice of finishes and cylinder functions meet correctional and vandal resistant requirements.

- Standard 4210 series closer shipped with EXTRA DUTY arm (non hold-open), metal security cover, and TORX Machine Screw pack. For options, see 4210 Series page 9.
- Sized cylinders for interior doors to 5'0" and exterior doors to 4'0".
- Non-sized cylinder adjustable for interior doors to 4'6" and exterior doors to 3'6".
- Closer mounts parallel arm, specify right or left swinging door.
- 4211 cylinder meets ADA requirements. See 4210 Series page 10.
- Standard or optional custom powder coat finish.
- Optional SRI primer for installations in corrosive conditions.
- The 4210 Series is UL listed with EDA or CUSH arms for self-closing doors.
- Tested and certified under ANSI Standard A156.4, grade one.

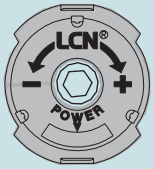

The 4211 includes the **LCN® FAST™ Power Adjust,** *a revolutionary visual indicator for Spring Power Adjustment.*

MOUNTING				FINISH		COVER		CYLINDER							*ARM FUNCTION		
HINGE (PULL) SIDE	PARALLEL ARM (PUSH)	STOP FACE	CONCEALED (FRAME)	POWDER COAT	PLATED	PLASTIC	METAL	HANDED	NON-SIZED	SIZED	ACCESSIBILITY	DELAYED ACTION	AVB**	DPS SWITCH	STANDARD (SINGLE)	EDA	CUSH/HCUSH
○	●	○	○	●	●	○	●	●	●	●	♿	●	●	○	○	180°	110°

● *Available*
○ *Not available*

♿ *Closer available with less than 5.0 lbs. opening force on 36" door.*
**Maximum opening with standard template. See individual closer series for degrees of opening per installation.*
*** Advanced Variable Backcheck*

LCN CLOSERS
121 W. RAILROAD AVE.
P.O. BOX 100
PRINCETON, IL, USA 61356-0100

PHONE 800-526-2400
FAX 800-248-1460
www.lcnclosers.com
3/04

LCN 4210 SERIES

MOUNTING DETAILS

PARALLEL ARM (PUSH SIDE) MOUNTING

MAXIMUM OPENING

EDA arm can be templated for
100°,
Ⓐ = 5 15/16" (151 mm)
Ⓑ = 7 1/4" (184 mm)
140°,
Ⓐ = 4 7/16" (113 mm)
Ⓑ = 5 3/4" (146 mm)
or 180°.
Ⓐ = 2 15/16" (75 mm)
Ⓑ = 4 1/4" (108 mm)
CUSH arm can be templated for maximum opening at
85°,
Ⓐ = 8 5/16" (211 mm)
Ⓑ = 9 5/8" (244 mm)
90°,
Ⓐ = 7 11/16" (195 mm)
Ⓑ = 9" (229 mm)
100°,
Ⓐ = 6 7/16" (164 mm)
Ⓑ = 7 3/4" (197 mm)
or 110°.
Ⓐ = 5 9/16" (141 mm)
Ⓑ = 6 7/8" (175 mm)
Hold-open point at maximum opening with H-CUSH arm.

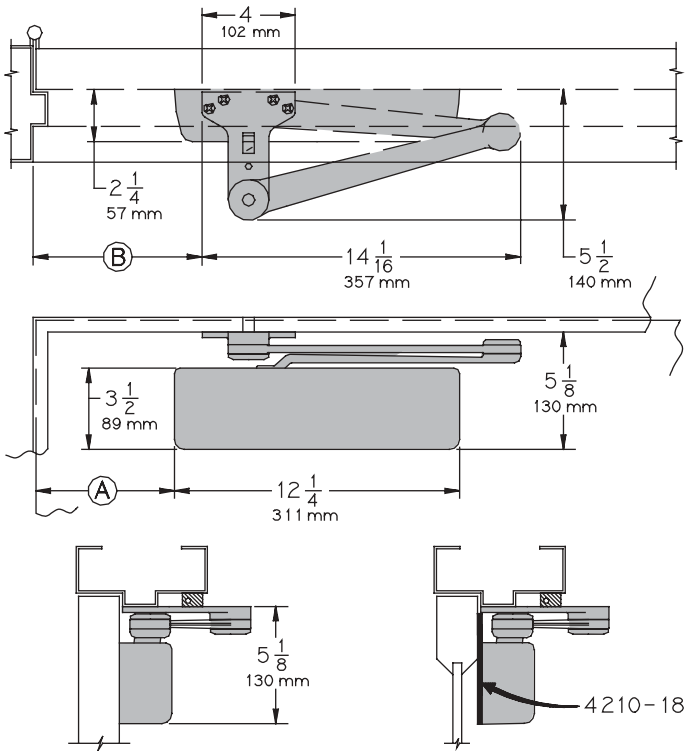

- **Butt Hinges** should not exceed 5" (127 mm) in width.
- **Auxiliary Stop** is recommended where the door cannot swing 180° or where CUSH arms not used.
- **Clearance** for EDA or Cush is 5 1/2" (140 mm) from push side of door.
- **Top Rail** less than 5 1/8" (130 mm) measured from stop, requires PLATE 4210-18. Plate requires 2" (51 mm) minimum top rail.
- **Stop Width** 2 3/4" (70 mm) recommended. Less than 1" (25mm), consult factory.
- **Delay Action** Add suffix "DEL" to selected cylinder (eg. 4213DEL). Not available with 4215 or 4216 cylinder. Delays closing from maximum opening to approximately 70°. Delays time adjustable up to approximately 1 minute.
- **Advanced Variable Backcheck** cylinder starts backcheck at approximately 45° instead of the normal 75°. Add suffix "AVB" to selected cylinder (eg. 4213 AVB). When combined with Delayed Action, consult factory for special template.

Options
- Sized or non-sized cylinder.
- Delayed Action and/or Advanced Variable Backcheck cylinder.
- CUSH or H-CUSH arm.

Special Templates
Customized installation templates or products may be available to solve unusual applications. Contact LCN for assistance.

LCN CLOSERS
121 W. RAILROAD AVE.
P.O. BOX 100
PRINCETON, IL, USA 61356-0100

PHONE 800-526-2400
FAX 800-248-1460
www.lcnclosers.com

3/04

CYLINDERS

CYLINDER, 4210-3071

Standard, handed cast iron cylinder assembly.
For various applications see "Table of Sizes" on 4210 Series page 10.

COVER

SECURITY COVER, 4210-72MC

Standard, handed heavy gauge metal security cover.
Four point mounting for extra security.
Closer adjustments not accessible with cover installed.

ARMS

EXTRA DUTY ARM, 4210-3077EDA

Non-handed parallel arm features solid forged steel main arm and forearm for potentially abusive installations.
Double slab arm/pinion attachment for maximum strength.

CUSH-N-STOP® (CUSH) ARM, 4210-3077CNS

Optional, handed parallel arm features solid forged steel main arm and forearm with built-in stop in soffit shoe.
Double slab arm/pinion attachment for maximum strength.

HCUSH ARM, 4210-3049CNS

Optional handed arm provides hold-open function with templated stop/hold-open points.
Handle controls hold-open function.
HCUSH arm not available with 4216 cylinder.
Double slab arm/pinion attachment for maximum strength.

INSTALLATION ACCESSORIES

PLATE, 4210-18, 4210-18CUSH

Required for push side mount where top rail is less than 5 1/8" (130 mm), measured from the stop.
Plate requires 2" (51 mm) minimum top rail measured from the stop. Plate also used with CUSH arm installations.

CUSH SHOE SUPPORT, 4210-30

Provide anchorage for fifth screw used with CUSH arms where reveal is less than 3 1/16" (78 mm).

BLADE STOP SPACER, 4210-61

Lowers parallel arm shoe to clear 1/2" (13 mm) blade stop.

CUSH FLUSH PANEL ADAPTER, 4210-419

Provides horizontal mounting surface for CUSH shoe on single rabetted or flush frame.

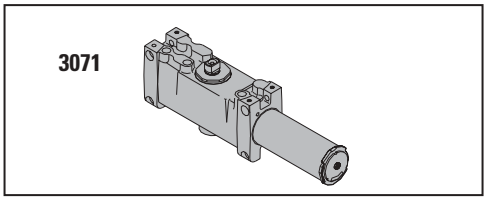

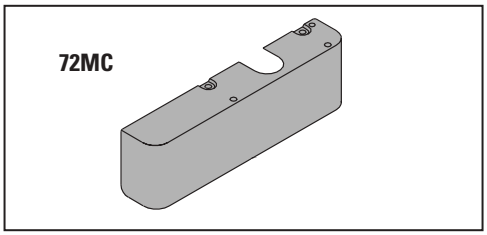

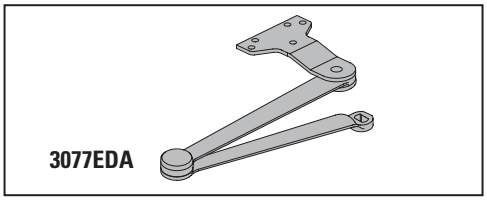

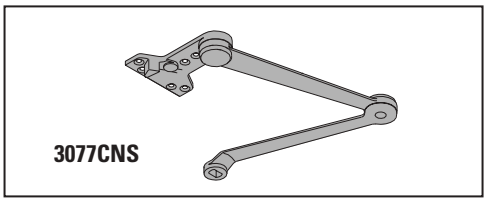

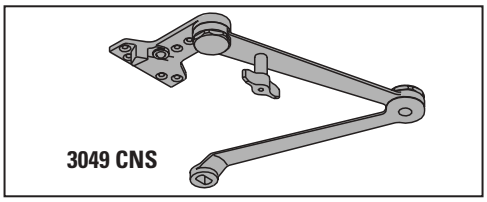

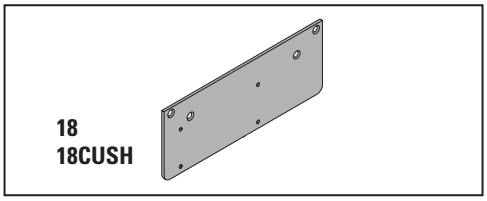

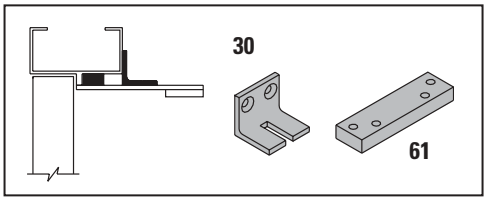

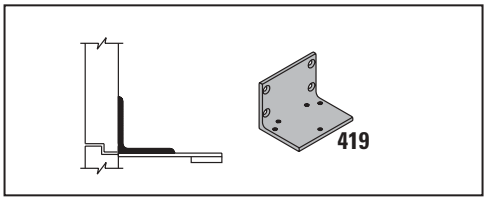

LCN CLOSERS
121 W. RAILROAD AVE.
P.O. BOX 100
PRINCETON, IL, USA 61356-0100

PHONE 800-526-2400
FAX 800-248-1460
www.lcnclosers.com
3/04

LCN 4210 SERIES

ORDERING INFORMATION

TABLE OF SIZES

Select closer based on width of door.
The spring power of non-sized 4211 cylinder is adjustable from size 1 through size 5 and is shipped set to size 3.
Sized 4210 series cylinders available in size 3, 4, 5, or 6.
Closing power of all 4210 Series closers may be increased 50%.
Specify next higher size closer where strong drafts exist.
Delayed action not available with 4215 or 4216 cylinder.

→ Indicates recommended range of door width for closer size

EXTERIOR (and VESTIBULE) DOOR WIDTH

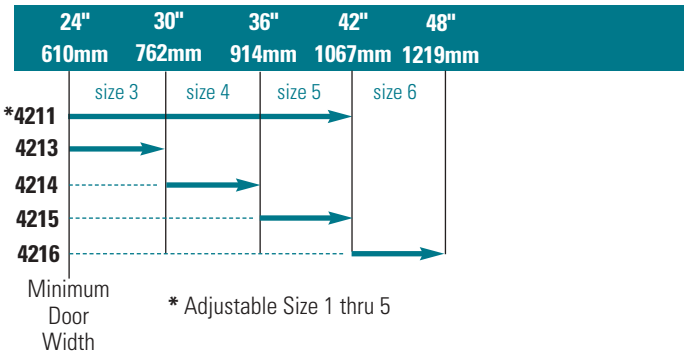

INTERIOR DOOR WIDTH

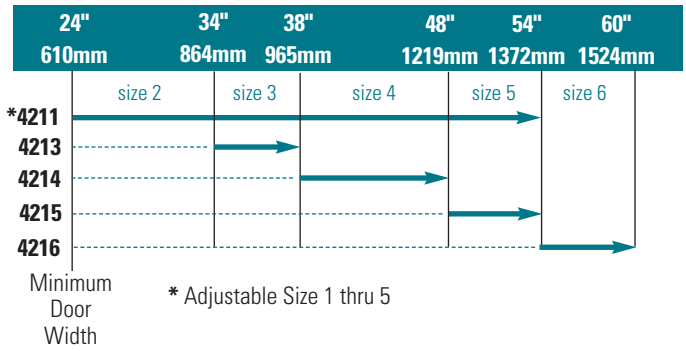

REDUCED OPENING FORCE 4210 CLOSERS

CAUTION ! Any manual door closer, including those certified by BHMA to conform to ANSI Standard A156.4, that is selected, installed and adjusted based on ADA or other reduced opening force requirements may not provide sufficient power to reliably close and latch a door.

Refer to POWER OPERATORS section for information on systems that meet reduced opening force requirements without effecting closing power.

DOOR WIDTH	36"	42"	48"
8.5* lbs.	4211	4211	4211
5.0* lbs.	4211	4211	4211

** Maximum opening force*

HOW-TO-ORDER 4210 SERIES CLOSERS

1. SELECT CYLINDER SIZE

- ☐ 4211 (adjustable from size 1 to 5)
- ☐ 4213
- ☐ 4214
- ☐ 4215 (DEL not available)
- ☐ 4216 (DEL or HCUSH arm not available)

2. SPECIFY HAND

- ☐ RH
- ☐ LH

3. SELECT FINISH

- ☐ Standard Powder Coat _____
  Aluminum, Dark Bronze , Tan, Statuary, Light Bronze, Black, Brass.

Closer will be shipped with:
- SECURITY COVER,
- EXTRA DUTY ARM,
- TORX MACHINE SCREW PACK,
unless options listed below are selected.

CLOSER OPTIONS

CYLINDER

- ☐ Delayed Action (DEL)
- ☐ Advanced Variable Backcheck (AVB)

FINISH

- ☐ Custom Powder Coat (RAL) _____
- ☐ Plated Finish, US _____
- ☐ SRI primer

ARMS

- ☐ Cush-N-Stop arm (CUSH)
- ☐ HCush-N-Stop arm (HCUSH)

SCREW PACK

- ☐ TB* and TORX Machine Screw (TBTRX)
  * Specify door thickness if other than 1 3/4".

INSTALLATION ACCESSORIES

- ☐ PLATE, 4210-18
- ☐ PLATE, 4210-18CUSH

SPECIAL TEMPLATE

- ☐ ST- _____

NOTE: Installation of this closer requires T-27 and T-25 driver bits for TORX machine screws with a security pin. Sold separately.

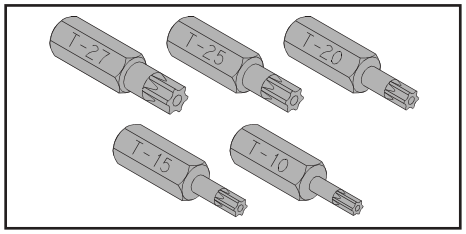

LCN CLOSERS
121 W. RAILROAD AVE.
P.O. BOX 100
PRINCETON, IL, USA 61356-0100

PHONE 800-526-2400
FAX 800-248-1460
www.lcnclosers.com

3/04