FEATURES

OPERATOR MOUNTS
INDEPENDENT PAIR, SURFACE MOUNT
***PULL SIDE**
PUSH SIDE
DOUBLE EGRESS

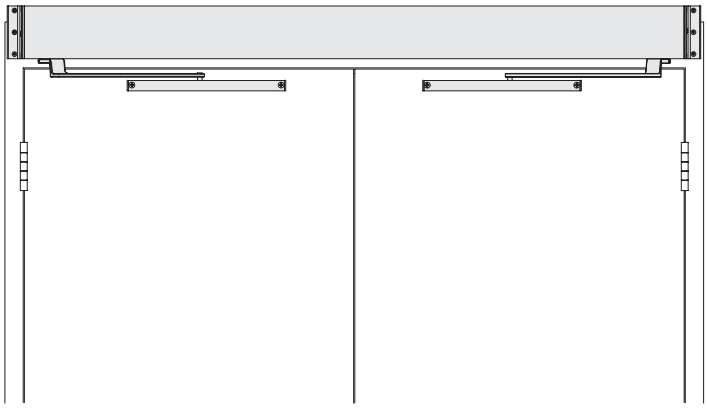

**PULL SIDE mount shown*

- 9560 series operator is shipped with motor gearboxes, control boxes, arms, header, and mounting hardware.
- Independent pair, surface mounted.
- Meets ADA requirements (power mode only).
- Handed product.
- Pull, Push or Double Egress applications available.
- 72" header length is standard. Specify other length 60" to 98". Consult factory regarding this option.
- Adjustable hold-open period of 2 to 30 seconds in automatic or manual mode.

The 9560 SENIOR SWING® by LCN is an ADA door operator that is a two-in-one swing door operator. SENIOR SWING® operators when activated, opens doors automatically for wheelchair access, yet allows for manual operation for regular pedestrian traffic.

- **Push 'N Go permits non-switch activation**
- **Power Boost provides additional latching force**
- **Electromechanical unit with microprocessor control**
- **Fast and easy installation**
- **Tested internally to over ten million cycles**
- **Meets International Building Code requirements and ANSI A156.19**
- **UL approved for fire doors**

9560 Series is fully compliant with UL 325 and meets the provisions of ANSI A156.19. The 9560 Series is UL listed for fire-rated applications. The 9560 Series also meets the provisions of the Americans with Disabilities Act.

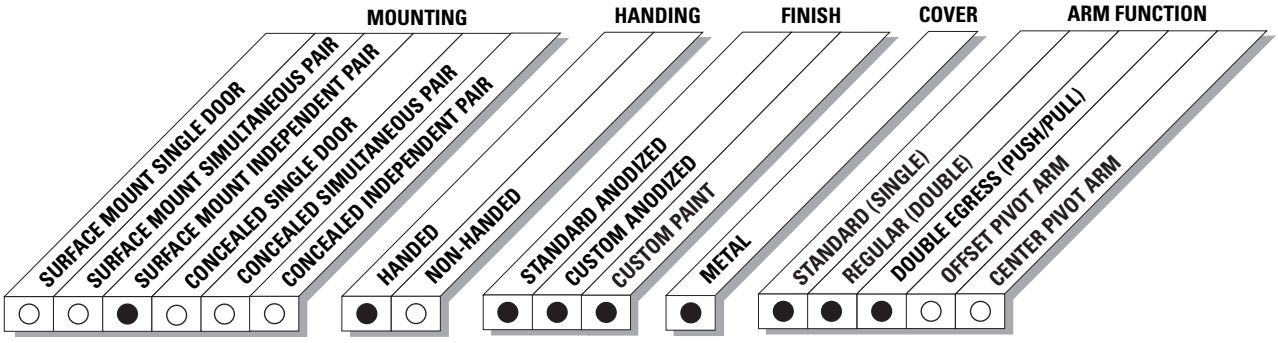

● AVAILABLE

○ NOT AVAILABLE

LCN CLOSERS
121 W. RAILROAD AVE.
P.O. BOX 100
PRINCETON, IL, USA 61356-0100

PHONE 800-526-2400
FAX 800-248-1460
www.lcnclosers.com
8/04

TOP JAMB INDEPENDENT PAIR (OFFSET PIVOT/BUTT HINGE, PUSH) MOUNTING

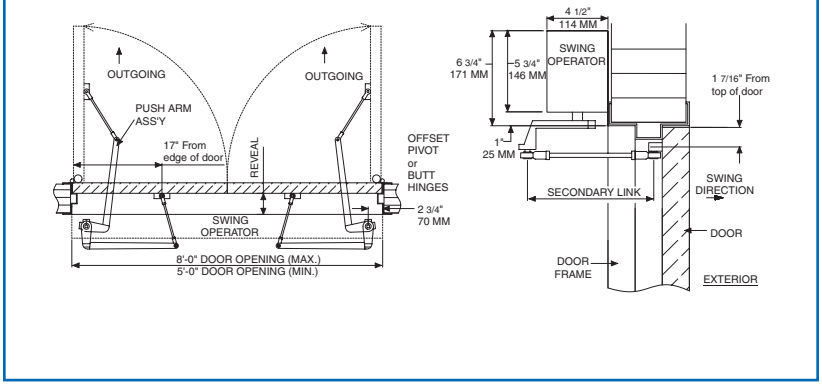

TOP JAMB INDEPENDENT PAIR (OFFSET PIVOT/BUTT HINGE, PULL) MOUNTING

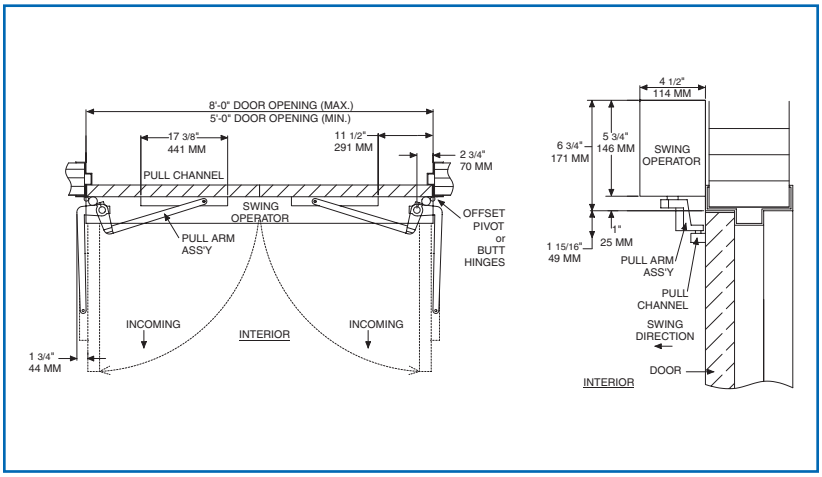

MAXIMUM OPENING

Template allows 90 degree power opening and 90 degree manual opening.

- **Butt Hinges** should not exceed 5" (127 mm) in width.
- **Reveal for push** installations should not exceed 10" (254 mm) for REGULAR ARM and 20" (508 mm) for LONG ARM.
- **Reveal for pull** installations should not exceed 4" (102 mm).
- **Reveal for double egress** installations should not exceed 4" (102 mm).
- **Head Frame** minimum 1 3/4" (44 mm). Face frame 6 3/4" (171 mm) total operator clearance.
- **Top Rail** minimum 2 3/4" (70 mm).
- **Opening & Closing Time** are variable by adjustments to the electronic control box. Maximum hold-open time adjustable up to approximately 30 seconds.
- **System Diagram** see "POWER OPERATORS" section pages 26-27 for typical system wiring and page 30 for electrical data.
- Please consult your local SSC representative or LCN for assistance with specific installations and material requirements.

Special Templates
Customized installation templates or products may be available to solve unusual applications. Contact LCN for assistance.

LCN CLOSERS
121 W. RAILROAD AVE.
P.O. BOX 100
PRINCETON, IL, USA 61356-0100

PHONE 800-526-2400
FAX 800-248-1460
www.lcnclosers.com
8/04

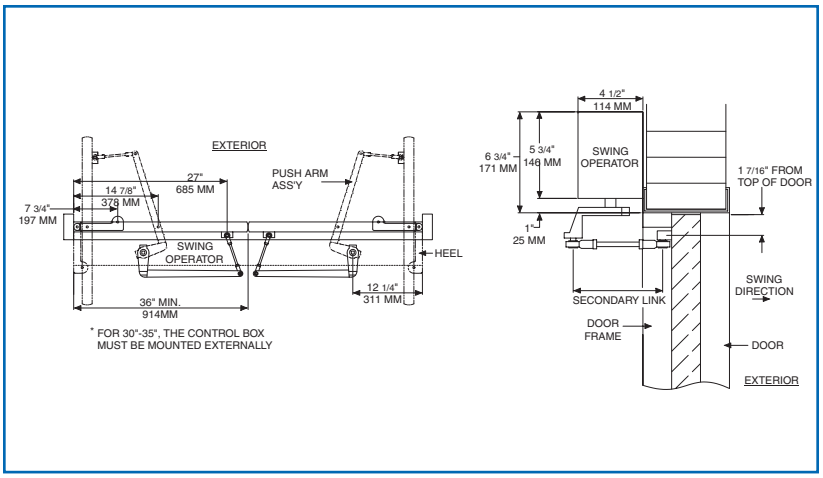

TOP JAMB INDEPENDENT PAIR (BALANCE DOOR, PUSH) MOUNTING

Consult factory for all balance door installations.

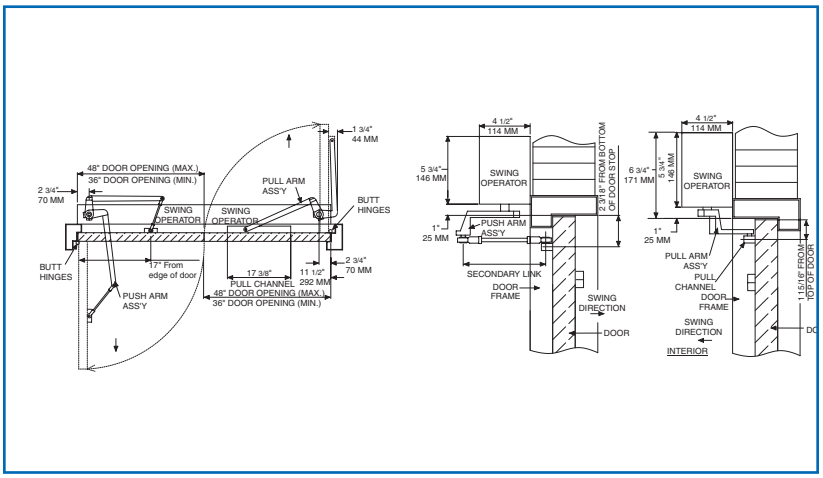

TOP JAMB INDEPENDENT PAIR (RH DOUBLE EGRESS) MOUNTING

- **Butt Hinges** should not exceed 5" (127 mm) in width.
- **Reveal for push** installations should not exceed 10" (254 mm) for REGULAR ARM and 20" (508 mm) for LONG ARM.
- **Reveal for pull** installations should not exceed 4" (102 mm).
- **Reveal for double egress** installations should not exceed 4" (102 mm).
- **Head Frame** minimum 1 3/4" (44 mm). Face frame 6 3/4" (171 mm) total operator clearance.
- **Top Rail** minimum 2 3/4" (70 mm).
- **Opening & Closing Time** are variable by adjustments to the electronic control box. Maximum hold-open time adjustable up to approximately 30 seconds.
- **System Diagram** see "POWER OPERATORS" section pages 26-27 for typical system wiring and page 30 for electrical data.
- Please consult your local SSC representative or LCN for assistance with specific installations and material requirements.

MAXIMUM OPENING

Template allows 90 degree power opening and 90 degree manual opening.

Special Templates
Customized installation templates or products may be available to solve unusual applications. Contact LCN for assistance.

LCN CLOSERS
121 W. RAILROAD AVE.
P.O. BOX 100
PRINCETON, IL, USA 61356-0100

PHONE 800-526-2400
FAX 800-248-1460
www.lcnclosers.com
8/04

LCN 9560 SERIES

MOTOR GEARBOX

MOTOR GEARBOX (STANDARD FORCE) – SENIOR SWING, 9560-3454
Driving mechanism for operator. Provides 15lbs opening force. Handed.
MOTOR GEARBOX (REDUCED FORCE) – SENIOR SWING, 9560-3454RF
Driving mechanism for operator. Provides 11lbs opening force. Handed.

MOUNTING BRACKETS

MOUNTING BRACKET – 2 3/4", 9560-275
Motor gearbox mounting bracket for 2 3/4" offset pivot or butt hinge installations. Front bracket.
REAR MOUNT BRACKET, 9560-3018
Motor gearbox mounting bracket. Rear bracket.
ANGLED BRACKET, 9560-334-1
Mounting bracket for surface applications.

CONTROL BOXES

CONTROL BOX – SENIOR SWING, 9560-3462
Electronic controlling device for Senior Swing

HEADERS

HEADER, 9560-72HL
Standard, mounting header. Pair door, two operators.
Specify length 60"to 98" maximum.

END CAPS

HEADER END CAPS, 9560-334
End cap with openings for wiring.
END DRESS PLATE, 9560-334-2
Metal finish end cap.

TRACKS

TRACK 9560-3038
Standard non-handed track.
TRACK END CAP 9560-73
Black plastic end caps.

ARMS

STANDARD ARM, 9530-3077T
Handed arm. Track roller not included.
REGULAR ARM, 9540-3077
Handed arm.
LONG ARM, 9540-3077L
Handed long arm.

INDIVIDUAL ARMS COMPONENTS

MAIN ARM, 9560-77
Handed arm attaches to motor gearbox
LINKAGE ASSEMBLY – 15", 9560-79
Threaded rod attaches to door. Extends from main arm.
LINKAGE ASSEMBLY – 32", 9560-79LR
Threaded long rod attaches to door. Extends from main arm.

LCN CLOSERS
121 W. RAILROAD AVE.
P.O. BOX 100
PRINCETON, IL, USA 61356-0100
PHONE 800-526-2400
FAX 800-248-1460
www.lcnclosers.com
8/04

INSTALLATION ACCESSORIES

ROLLER, 9560-3034
Quiet low friction roller assembly.

SPINDLE PLATE – 2 3/4", 9560-11A
Hides bottom of motor gearbox. Completes header box. Cutout allows for motor gearbox shaft. For 2 3/4" offset pivot or butt hinge installations.

FILLER PLATE BLANK, 9560-12
Completes length of header box.

MOUNTING PLATE, 9560-18
Optional mounting plate for standard hollow metal door frames. Specify length 30" to 98" maximum.

LCN CLOSERS
121 W. RAILROAD AVE.
P.O. BOX 100
PRINCETON, IL, USA 61356-0100

PHONE 800-526-2400
FAX 800-248-1460
www.lcnclosers.com
8/04

LCN 9560 SERIES

ORDERING INFORMATION

TABLE OF SIZES

→ Indicates recommended range of door width for operator.

Note: For all Senior Swing Series

Independent Pair – Width per leaf 30" minimum to 48" maximum

DOOR WIDTH

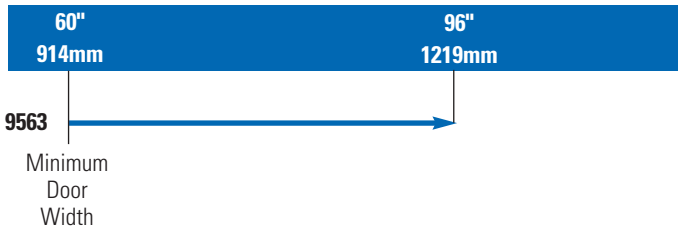

HOW-TO-ORDER 9560 SERIES OPERATORS

1. SPECIFY HAND

☐ RH

☐ LH

2. SPECIFY FINISH.

☐ Standard Anodized Finish _____
Aluminum or Dark Bronze

Operator will be shipped with:

-STANDARD MOTOR GEARBOX (SF) (2 ea)

-STANDARD CONTROL BOX (SC) (2 ea)

-72" METAL COVER (72HL)

-REGULAR ARM (2 ea)

-2 3/4" PIVOT POINT

-MACHINE SCREW PACK

Unless options listed below are selected.

OPERATOR OPTIONS

MOTOR GEARBOX

☐ Reduced Force Motor Gearbox (RF)

HEADER

☐ 72HL__ (Specify length 60" to 98")

MOUNTING PLATE

☐ Plate, ____ (Specify Length 30" to 98")

ARM

☐ Standard Arm (2 ea)
w/Standard Track (2 ea)

☐ Double Egress
Includes Standard Arm w/Track (1 ea)
& Regular Arm (1 ea)

☐ Long Arm (3077L)

FINISH

☐ Custom Anodized Finish _____

☐ Custom Painted Finish _____

SPECIAL TEMPLATE

☐ ST-_____

LCN CLOSERS
121 W. RAILROAD AVE.
P.O. BOX 100
PRINCETON, IL, USA 61356-0100

PHONE 800-526-2400
FAX 800-248-1460
www.lcnclosers.com

8/04