FEATURES

HINGE (PULL) SIDE MOUNT

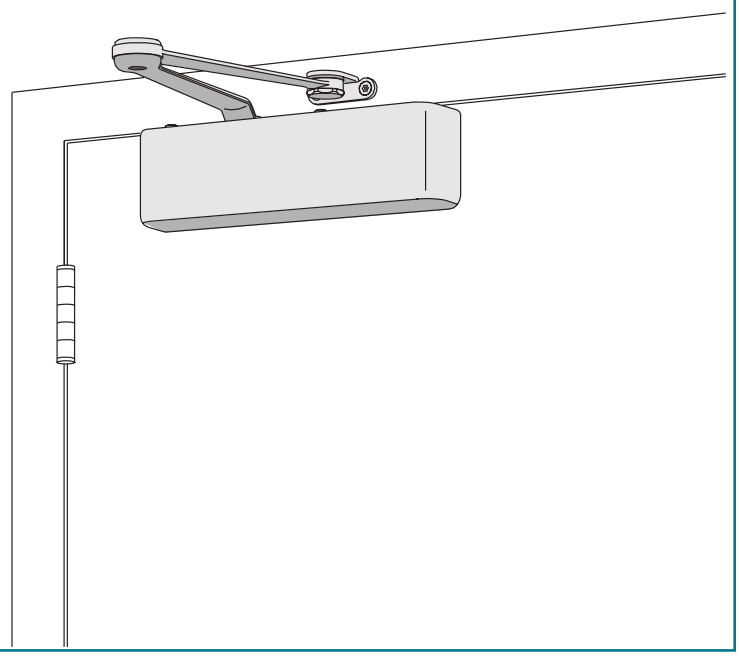

The 4510 SMOOTHEE® Series is a heavy duty, high security closer with special components to minimize tampering and vandalism. Forged steel double lever arms and heavy gauge metal security covers are designed for correctional, vandal prone, institutional and other high traffic applications. The closer has passed 10,000,000 cycles in independent testing. A choice of finishes and cylinder functions meet correctional and vandal resistant requirements.

- Standard 4510 series closer shipped with EXTRA DUTY arm (non hold-open), metal security cover, and TORX Machine Screw pack. See 4510 Series page 17 for options.
- Sized cylinders for interior doors to 5'0" and exterior doors to 4'0".
- Non-sized cylinder adjustable for interior doors to 4'6" and exterior doors to 3'6".
- Closer mounts hinge side, specify right or left swinging door.
- 4511 cylinder meets ADA requirements. See 4510 Series page 18.
- Standard or optional custom powder coat finish.
- Optional SRI primer for installations in corrosive conditions.
- The 4510 Series is UL listed for self-closing doors.
- Tested and certified under ANSI Standard A156.4, grade one.

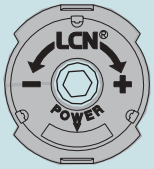

The 4511 includes the **LCN® FAST™ Power Adjust,** *a revolutionary visual indicator for Spring Power Adjustment.*

MOUNTING				FINISH		COVER		CYLINDER							*ARM FUNCTION		
HINGE (PULL) SIDE	PARALLEL ARM (PUSH)	STOP FACE	CONCEALED (FRAME)	POWDER COAT	PLATED	PLASTIC	METAL	HANDED	NON-SIZED	SIZED	ACCESSIBILITY	DELAYED ACTION	AVB**	DPS SWITCH	STANDARD (SINGLE)	EDA	CUSH/HCUSH
●	○	○	○	●	●	○	●	●	●	●	♿	●	●	○	○	140°	○

● *Available*
○ *Not available*

♿ *Closer available with less than 5.0 lbs. opening force on 36" door.*
**Maximum opening with standard template.*
*** Advanced Variable Backcheck*

LCN CLOSERS
121 W. RAILROAD AVE.
P.O. BOX 100
PRINCETON, IL, USA 61356-0100

PHONE 800-526-2400
FAX 800-248-1460
www.lcnclosers.com
3/04

LCN 4510 SERIES

MOUNTING DETAILS

HINGE (PULL) SIDE MOUNTING

MAXIMUM OPENING

Can be templated for 140°.

Ⓐ = 4 3/16" (106 mm)
Ⓑ = 9 7/8" (251 mm)

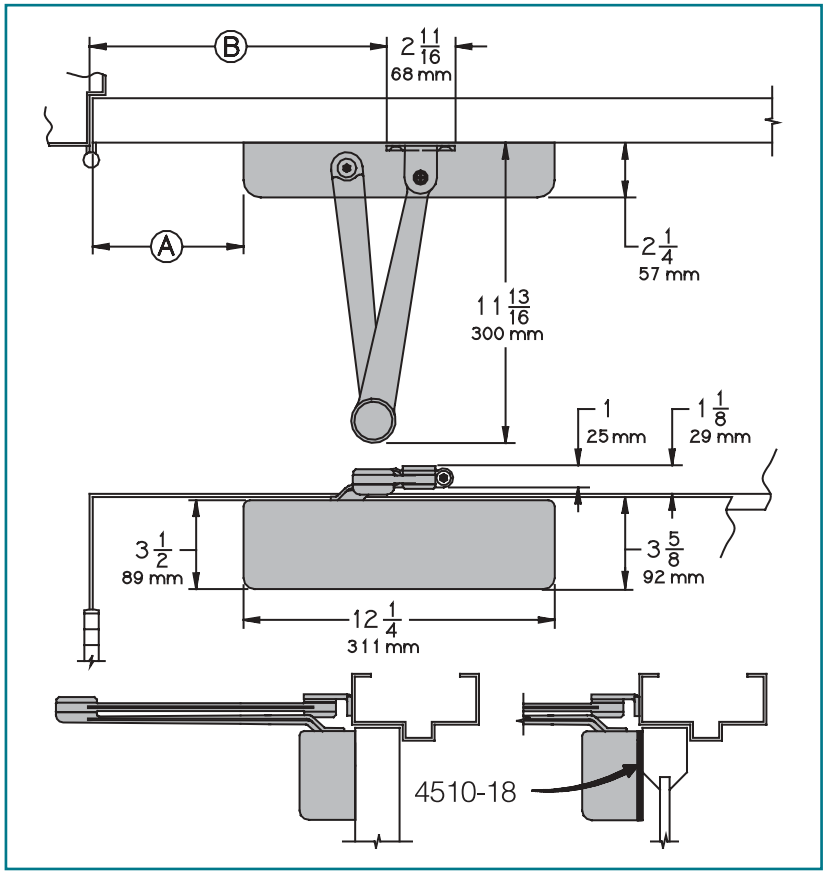

- **Butt Hinges** should not exceed 5" (127 mm) in width.
- **Auxiliary Stop** is recommended where a door cannot swing 140°.
- **Reveal** should not exceed 1/8" (3 mm).
- **Top Rail** less than 3 1/2" (89 mm), requires PLATE 4510-18. Plate requires 2" (51mm) minimum top rail.
- **Head frame** less than 1" (25 mm), consult factory.
- **Clearance** of 2 1/4" (57 mm) behind door required for installation.
- **Arm Clearance** above door 1 1/8" (29 mm) required.
- **Delay Action** Add suffix "DEL" to selected cylinder (eg. 4514 DEL). Not available with 4516 cylinder. Delays closing from maximum opening to approximately 70°. Delay time adjustable up to approximately 1 minute.
- **Advanced Variable Backcheck** cylinder starts backcheck at approximately 45° instead of the normal 75°. Add suffix "AVB" to selected cylinder (eg. 4514 AVB). When combined with Delayed Action, consult factory for special template.

Options

- Sized or non-sized cylinder.
- Delayed action and/or Advanced Variable Backcheck cylinder.

Special Templates

Customized installation templates or products may be available to solve unusual applications. Contact LCN for assistance.

LCN CLOSERS
121 W. RAILROAD AVE.
P.O. BOX 100
PRINCETON, IL, USA 61356-0100

PHONE 800-526-2400
FAX 800-248-1460
www.lcnclosers.com

3/04

CYLINDERS

CYLINDER, 4510-3071

Standard, handed cast iron cylinder assembly.
For various applications see "Table of Sizes" on 4510 Series page 18.

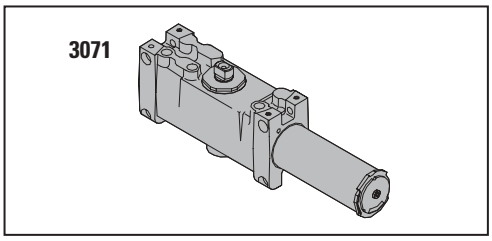

COVER

SECURITY COVER, 4510-72MC

Standard, handed, heavy gauge metal security cover.
Four point mounting for extra security.
Closer adjustments not accessible with cover installed.

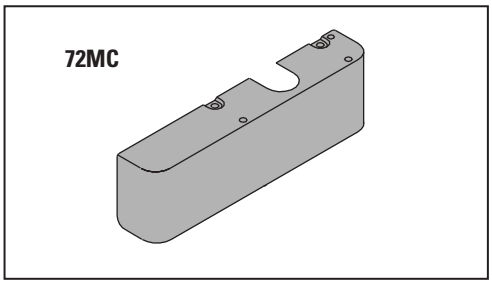

ARM

EXTRA DUTY ARM, 4510-3077EDA

Non-handed arm, features solid forged steel main arm and forearm for potentially abusive installations.
Double slab arm/pinion attachment for maximum strength.

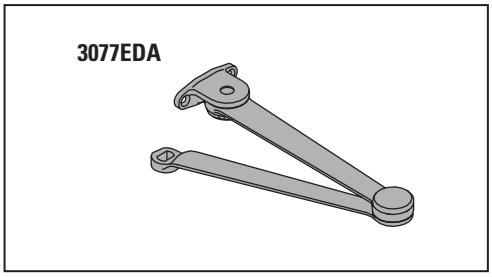

INSTALLATION ACCESSORIES

PLATE, 4510-18

Required where top rail is less than 3 1/2" (89 mm).
Plate requires minimum 2" (51 mm) top rail.

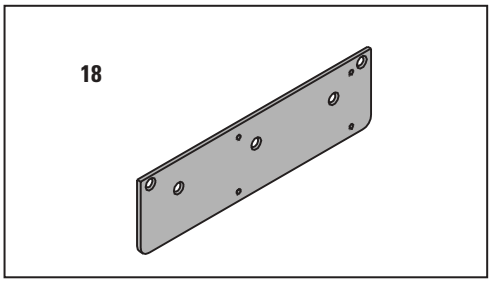

LCN CLOSERS
121 W. RAILROAD AVE.
P.O. BOX 100
PRINCETON, IL, USA 61356-0100

PHONE 800-526-2400
FAX 800-248-1460
www.lcnclosers.com
3/04

LCN 4510 SERIES

ORDERING INFORMATION

TABLE OF SIZES

Select closer based on width of door.
The spring power of non-sized 4511 cylinder is adjustable from size 1 through size 5 and is shipped set to size 3.
Sized 4510 series cylinders available in size 3, 4, 5, or 6.
Closing power of all 4510 Series closers may be increased 50%.
Specify next higher size closer where strong drafts exist.
Delayed action not available with 4516 cylinder.

→ Indicates recommended range of door width for closer size.

EXTERIOR (and VESTIBULE) DOOR WIDTH

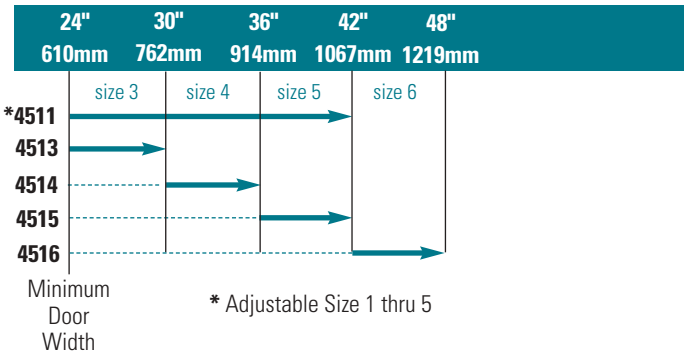

INTERIOR DOOR WIDTH

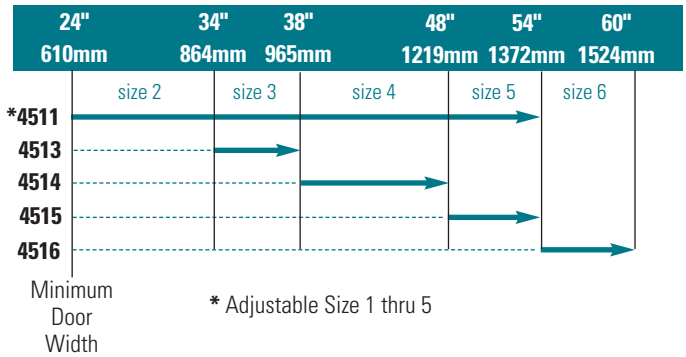

REDUCED OPENING FORCE 4510 CLOSERS

CAUTION ! Any manual door closer, including those certified by BHMA to conform to ANSI Standard A156.4, that is selected, installed and adjusted based on ADA or other reduced opening force requirements may not provide sufficient power to reliably close and latch a door.

Refer to POWER OPERATORS section for information on systems that meet reduced opening force requirements without effecting closing power.

DOOR WIDTH	36"	42"	48"
8.5* lbs.	4511	4511	4511
5.0* lbs.	4511	4511	4511

** Maximum opening force*

HOW-TO-ORDER 4510 SERIES CLOSERS

1. SELECT CYLINDER SIZE

- ☐ 4511 (adjustable from size 1 to 5)
- ☐ 4513
- ☐ 4514
- ☐ 4515
- ☐ 4516 (DEL not available)

2. SPECIFY HAND

- ☐ RH
- ☐ LH

3. SELECT FINISH

- ☐ Standard Powder Coat _____
  Aluminum, Dark Bronze , Tan, Statuary, Light Bronze, Black, Brass.

Closer will be shipped with:
- SECURITY COVER,
- EXTRA DUTY ARM,
- TORX MACHINE SCREW PACK,
unless options listed below are selected.

CLOSER OPTIONS

CYLINDER

- ☐ Delayed Action (DEL)
- ☐ Advanced Variable Backcheck (AVB)

FINISH

- ☐ Custom Powder Coat (RAL) _____
- ☐ Plated Finish, US _____
- ☐ SRI primer

SCREW PACK

- ☐ TB* and TORX Machine Screw (TBTRX)
  * Specify door thickness if other than 1 3/4".

INSTALLATION ACCESSORIES

- ☐ PLATE, 4510-18

SPECIAL TEMPLATE

- ☐ ST- _____

NOTE: Installation of this closer requires T-27 and T-25 driver bits for TORX machine screws with a security pin. Sold separately.

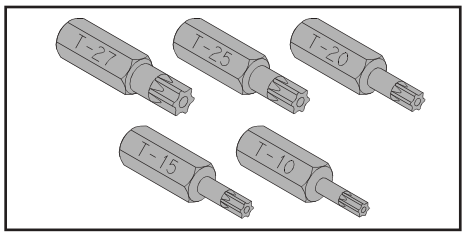

LCN CLOSERS
121 W. RAILROAD AVE.
P.O. BOX 100
PRINCETON, IL, USA 61356-0100
PHONE 800-526-2400
FAX 800-248-1460
www.lcnclosers.com
3/04