FEATURES

*PARALLEL ARM (PUSH SIDE) MOUNT

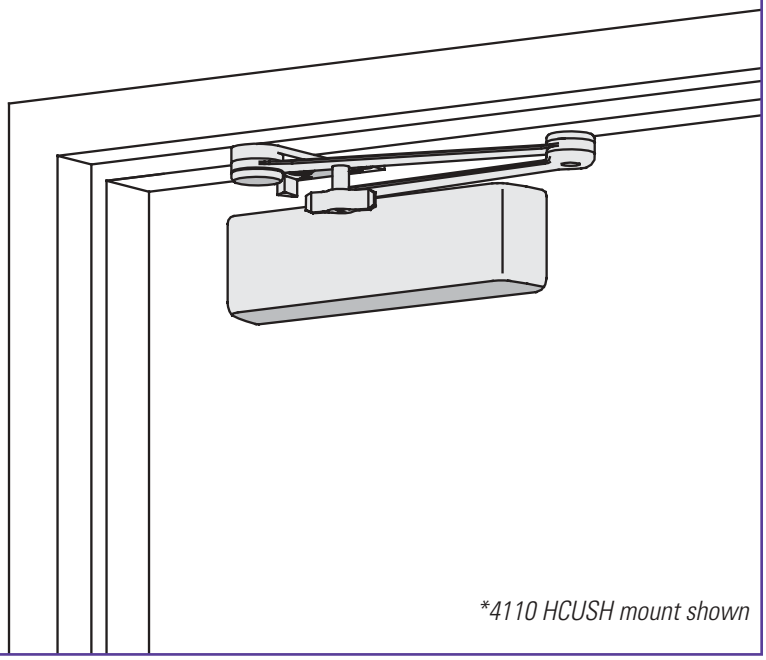

*4110 HCUSH mount shown

The 4110 SMOOTHEE® is LCN's best performing heavy duty closer designed specifically for institutional and other rugged high traffic applications.

- **Ten Million Cycles**
- **Cast Iron**
- **Extra Duty Forged Steel Arm Standard**
- **Double Heat Treated Steel Pinion**
- **All Weather Fluid**
- **LCN® Fast™ Power Adjust**
- **Fast & Accurate Installation**
- **UL & ULC Listed**

- Standard 4110 series closer shipped with EXTRA DUTY arm, standard plastic cover, 4110-201 FIFTH SCREW SPACER and self reaming and tapping screws. See 4110 Series pages 47 & 48 for options.
- Sized cylinders adjustable for interior doors to 5'0" and exterior doors to 4'0".
- Non-sized cylinder adjustable for interior doors to 4'6" and exterior doors to 3'6".
- Closer mounts parallel arm, specify right or left swinging door.
- 4111 cylinder meets ADA requirements. See 4110 Series page 49.
- Standard or optional custom powder coat finish.
- Optional plated finish on cover, arm and fasteners.
- Optional SRI primer for installations in corrosive conditions.
- The 4110 Series is UL and ULC listed for self-closing doors without hold-open.
- Tested and certified under ANSI Standard A156.4, grade one.

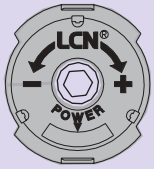

The 4111 includes the **LCN® FAST™ Power Adjust,** *a revolutionary visual indicator for Spring Power Adjustment.*

MOUNTING					FINISH		COVER			CYLINDER					**ARM FUNCTION						
HINGE(PULL)SIDE	TOP JAMB (PULL)	TOP JAMB (PUSH)	PARALLEL ARM	STOP FACE	POWDER COAT	PLATED	PLASTIC	METAL	DESIGNER METAL	NON-HANDED	NON-SIZED	ACCESSIBILITY	DELAYED ACTION	AVB***	REGULAR(DOUBLE)	STANDARD(SINGLE)	HOLD-OPEN	FUSIBLE LINK	EDA/HEDA	CUSH/HCUSH	SCUSH/SHCUSH
○	○	○	●	○	●	●	●	●	○	○	●	♿	●	●	○	○	○	180°	180°	110°	110°

● *Available*
○ *Not available*

♿ *Closer available with less than 5.0 lbs. opening force on 36" door.*
***Maximum opening/hold-open point with standard template.*
**** Advanced Variable Backcheck*

LCN CLOSERS
121 W. RAILROAD AVE.
P.O. BOX 100
PRINCETON, IL, USA 61356-0100

PHONE 800-526-2400
FAX 800-248-1460
www.lcnclosers.com
3/04

PARALLEL ARM (PUSH SIDE) MOUNTING

MAXIMUM OPENING

EDA or Fusible Link arm can be templated for
100°,
Ⓐ = 5 15/16" (151 mm)
Ⓑ = 7 1/4" (184 mm)
140°,
Ⓐ = 4 7/16" (113 mm)
Ⓑ = 5 3/4" (146 mm)
or 180°.
Ⓐ = 2 15/16" (75 mm)
Ⓑ = 4 1/4" (108 mm)
Hold-open points up to maximum opening with HEDA or Fusible Link arm.

CUSH arm can be templated for maximum opening at
85°,
Ⓐ = 8 5/16" (211 mm)
Ⓑ = 9 5/8" (244 mm)
90°,
Ⓐ = 7 11/16" (195 mm)
Ⓑ = 9" (229 mm)
100°,
Ⓐ = 6 7/16" (164 mm)
Ⓑ = 7 3/4" (197 mm)
or 110°.
Ⓐ = 5 9/16" (141 mm)
Ⓑ = 6 7/8" (175 mm)
Hold-open point at maximum opening with HCUSH arm.
Spring Cush hold-open points are approximately 5° less than templated stop point.

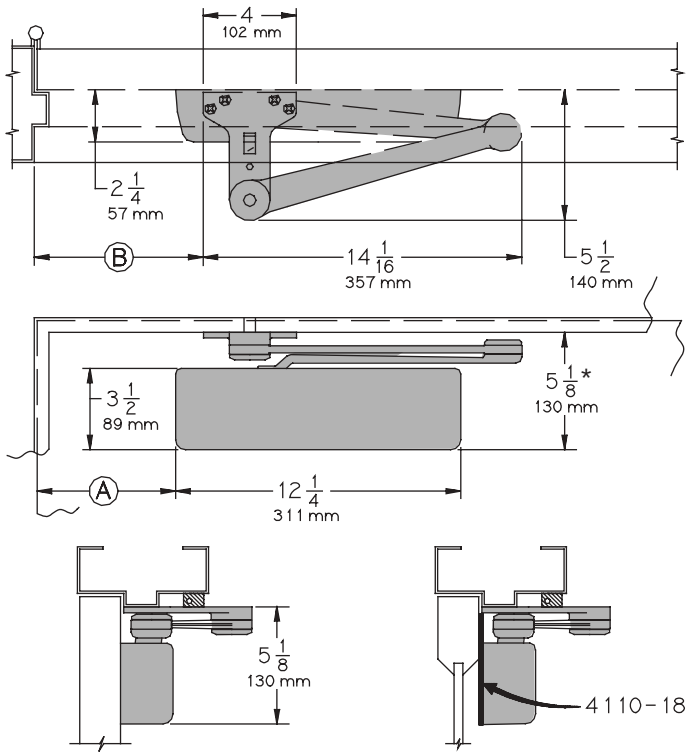

*5 11/16" (144 mm) For Fusible Link Arm applications

- **Butt Hinges** should not exceed 5" (127 mm) in width.
- **Auxiliary Stop** is recommended at hold-open point, where a door cannot swing 180°, or where CUSH-N-STOP arm is not used.
- **Clearance** for EDA, or CUSH shoe is 5 1/2" (140 mm) from door face.
- **Top Rail** less than 5 1/8" (130 mm) measured from stop requires PLATE, 4110-18. Plate requires 2" (51 mm) minimum measured from the stop.
- **Stop Width** minimum 1" (25 mm).
- **Head Frame** flush or rabetted requires 4110-145 arm or PA SHOE ADAPTER, 4110-418, Use CUSH FLUSH PANEL ADAPTER, 4110-419 with CUSH arms.
- **Reveal** less than 2 3/4" (70 mm), use CUSH SHOE SUPPORT, 4110-30 with CUSH arms.
- **Blade Stop Spacer**, 4110-61 required to clear 1/2" (13 mm) blade stop.
- **Cush Arm** requires CUSH SHOE SUPPORT, 4110-30 for fifth screw anchorage with CUSH arms.
- **Delayed Action** Add suffix "DEL" to selected cylinder (eg. 4115 DEL). Not available with 4115 or 4116 cylinder. Delays closing from maximum opening to approximately 70°. Delay time adjustable up to approximately 1 minute.
- **Advanced Variable Backcheck** cylinder starts backcheck at approximately 45° instead of the normal 75°. Add suffix "AVB" to selected cylinder. When combined with Delayed Action consult factory for special template.

Options

- Sized or non-sized cylinder.
- Delayed Action and/or Advanced Variable Backcheck cylinder.
- HEDA, CUSH, HCUSH, SPRING CUSH, SPRING HCUSH or Fusible Link arm.
- Metal or lead lined cover.

Special Templates

Customized installation templates or products may be available to solve unusual applications. Contact LCN for assistance.

LCN CLOSERS
121 W. RAILROAD AVE.
P.O. BOX 100
PRINCETON, IL, USA 61356-0100

PHONE 800-526-2400
FAX 800-248-1460
www.lcnclosers.com
3/04

CYLINDERS

CYLINDER, 4110-3071

Standard, handed cast iron cylinder assembly.

For various applications see "Table of Sizes" on 4110 Series page 49.

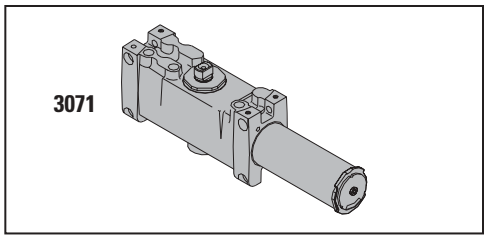

COVERS

COVER, 4110-72

Standard, non-handed plastic cover.

LEAD LINED COVER, 4110-72LL

Optional, non-handed cover.

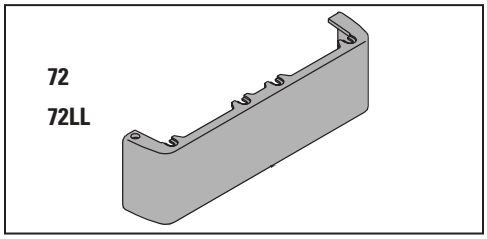

METAL COVER, 4110-72MC

Optional, handed cover. Required for plated finishes and custom powder coat finishes.

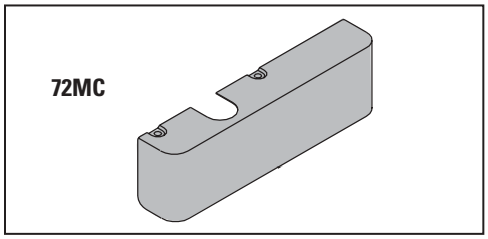

ARMS

EXTRA DUTY ARM, 4110-3077EDA

Non-handed parallel arm features forged, solid steel main and forearm for potentially abusive installations.
Optional 4110-62G thick hub shoe for blade stop clearance.
Optional 4110-145 flush transom shoe for single rabetted installations. Optional shoes require special templating.

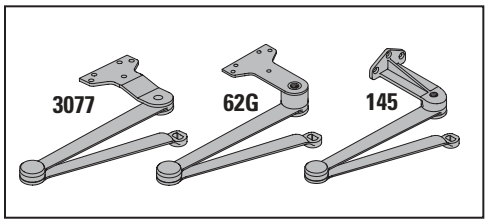

HOLD-OPEN ARM 4110-3049EDA

Optional handed arm provides hold-open function, adjustable at shoe.

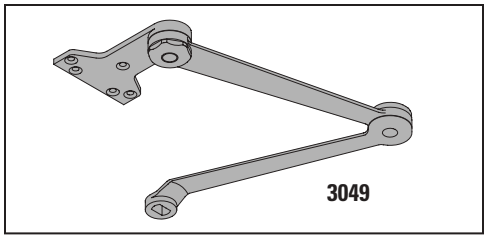

FUSIBLE LINK ARM, 4110-3049FL

Optional, handed arm releases hold-open function adjustable at shoe when exposed to temperatures above 165° F.
Optional link release at 135° F.

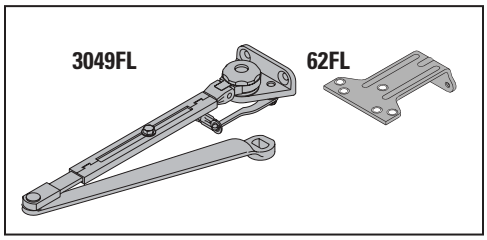

CUSH-N-STOP ARM, 4110-3077CNS

Optional, handed parallel arm features solid forged steel main arm and forearm with built-in stop in soffit shoe.

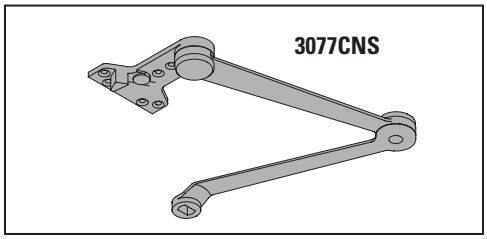

LCN CLOSERS
121 W. RAILROAD AVE.
P.O. BOX 100
PRINCETON, IL, USA 61356-0100

PHONE 800-526-2400
FAX 800-248-1460
www.lcnclosers.com
3/04

H-CUSH ARM 4110-3049CNS
Optional handed arm provides hold-open function with templated stop/hold-open points.
Handle controls hold-open function.

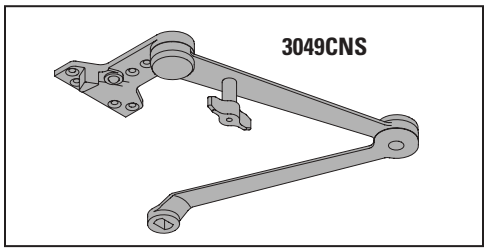

SPRING CUSH ARM, 4110-3077SCNS
Optional, non-handed parallel arm for abusive applications features solid forged steel main arm and forearm with spring loaded stop in the soffit shoe.

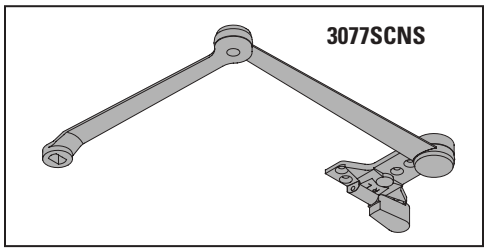

SPRING H-CUSH ARM, 4110-3049SCNS
Optional, non-handed parallel arm for abusive applications features solid forged steel main arm and forearm with spring loaded stop in the soffit shoe. Handle controls hold-open function.

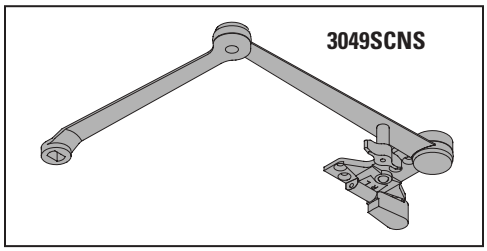

INSTALLATION ACCESSORIES

PLATE, 4110-18, 4110-18CUSH
Required for push side mount where top rail is less than 5 1/8" (130 mm), measured from the stop.
Plate requires minimum 2" (51 mm) minimum top rail.
Plate also used with CUSH Arm installations.

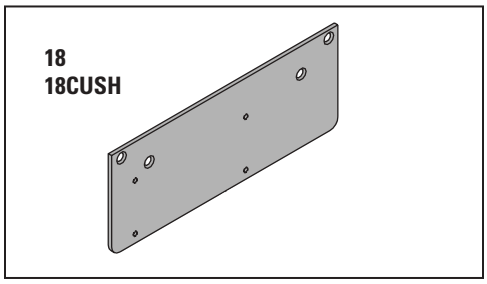

CUSH SHOE SUPPORT, 4110-30
Provides anchorage for fifth screw used with CUSH arm, where reveal is less than 3 1/16" (78 mm).

BLADE STOP SPACER, 4110-61
Lowers parallel arm shoe to clear 1/2" (13 mm) blade stop

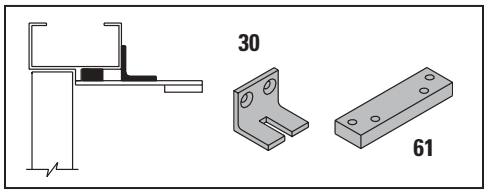

PA SHOE ADAPTER, 4110-418
Provides horizontal mounting surface for parallel arm shoe on single rabetted or flush frame.

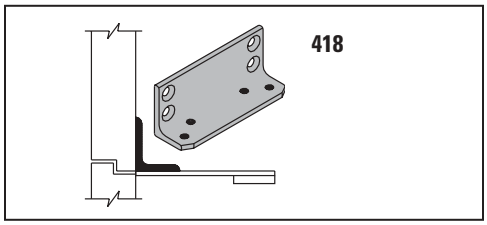

CUSH FLUSH PANEL ADAPTER, 4110-419
Provides horizontal mounting surface for CUSH shoe on single rabetted or flush frame.

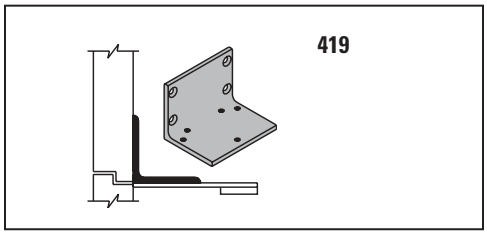

LCN CLOSERS
121 W. RAILROAD AVE.
P.O. BOX 100
PRINCETON, IL, USA 61356-0100

PHONE 800-526-2400
FAX 800-248-1460
www.lcnclosers.com
3/04

TABLE OF SIZES

Select closer based on width of door.
The spring power of non-sized 4111 cylinder is adjustable from size 1 through size 5 and is shipped set to size 3.
Sized 4110 series cylinders available in size 2, 3, 4, 5, or 6.
Closing power of all 4110 Series closers can be increased 50%.
Specify next higher size closer where strong drafts exist.
Delayed action not available with 4115 or 4116 cylinder
H - CUSH and SPRING H-CUSH arm not available with 4116 cylinder.

→ Indicates recommended range of door width for closer size

EXTERIOR (and VESTIBULE) DOOR WIDTH

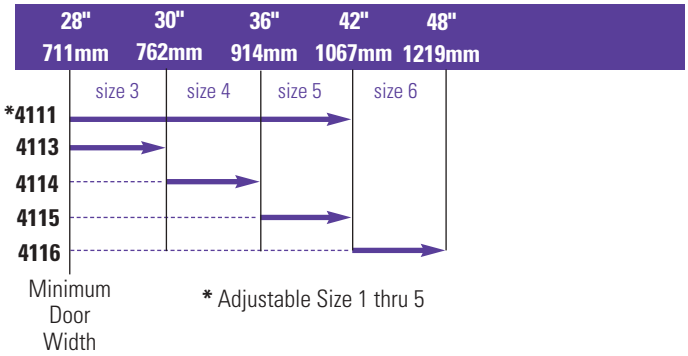

INTERIOR DOOR WIDTH

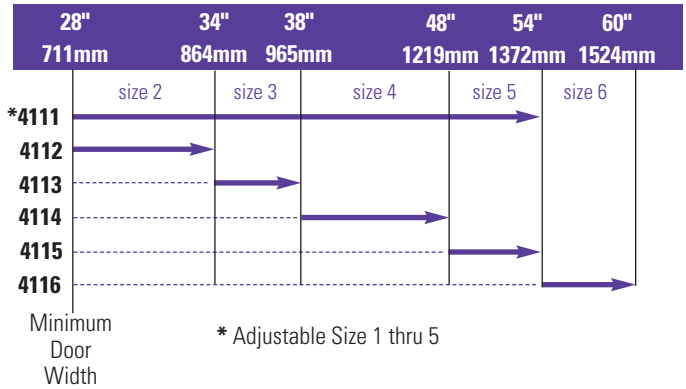

REDUCED OPENING FORCE 4110 CLOSERS

CAUTION ! Any manual door closer, including those certified by BHMA to conform to ANSI Standard A156.4, that is selected, installed and adjusted based on ADA or other reduced opening force requirements may not provide sufficient power to reliably close and latch a door.

Refer to POWER OPERATORS section for information on systems that meet reduced opening force requirements without effecting closing power.

	DOOR WIDTH	36"	42"	48"
♿	8.5* lbs.	4111	4111	4111
	5.0* lbs.	4111	4111	4111

** Maximum opening force*

HOW-TO-ORDER 4110 SERIES CLOSERS

1. SELECT CYLINDER SIZE

☐ 4111 (adjustable from size 1 to 5)
☐ 4112
☐ 4113
☐ 4114
☐ 4115 (DEL not available)
☐ 4116 (DEL or H- CUSH arm not available)

2. SPECIFY HAND

☐ RH
☐ LH

3. SELECT FINISH

☐ Standard Powder Coat _____
Aluminum, Dark Bronze , Tan, Statuary, Light Bronze, Black, Brass.

Closer will be shipped with:
- STANDARD COVER,
- FIFTH SCREW SPACER
- EDA ARM,
- SELF-REAMING and TAPPING SCREWS, unless options listed below are selected.

4110 CLOSER OPTIONS

CYLINDER

☐ Delayed Action ((DEL), not available with 4115 or 4116)
☐ Advanced Variable Backcheck (AVB)

COVER

☐ Lead Lined (LL)
☐ Metal (MC)

FINISH

☐ Custom Powder Coat (RAL) _____
(handed metal cover required)
☐ Plated Finish, US _____
(handed metal cover required)
☐ SRI primer

SPECIFY ARM

☐ Hold-Open Extra Duty (HEDA)
☐ Fusible Link,165° F* (FL)
* Optional link releases at 135° F.
☐ Cush-N-Stop (CUSH)
☐ H-Cush-N-Stop (n/a with 4116 cylinder) (HCUSH)
☐ Spring Cush (SCUSH)
☐ Spring H-Cush (n/a with 4116 cylinder) (SHCUSH)

SCREW PACK

☐ TB*, Self-Reaming & Tapping (TBSRT)
☐ Wood & Machine Screw (WMS)
☐ TB*, Wood & Machine Screw (TBWMS)
☐ TORX Machine Screw (TORX)
☐ TB* & TORX Machine Screw (TBTRX)
* Specify door thickness if other than 1 3/4".

INSTALLATION ACCESSORIES

☐ Plate, 4110-18
☐ CUSH Shoe Support, 4110-30
☐ Blade Stop Spacer, 4110-61
☐ PA Shoe Adapter, 4110-418
☐ CUSH Flush Panel Adapter, 4110-419

SPECIAL TEMPLATE

☐ ST- _____