FEATURES

CLOSER MOUNTS
***HINGE (PULL) SIDE**
TOP JAMB (PUSH SIDE)
PARALLEL (PUSH SIDE)

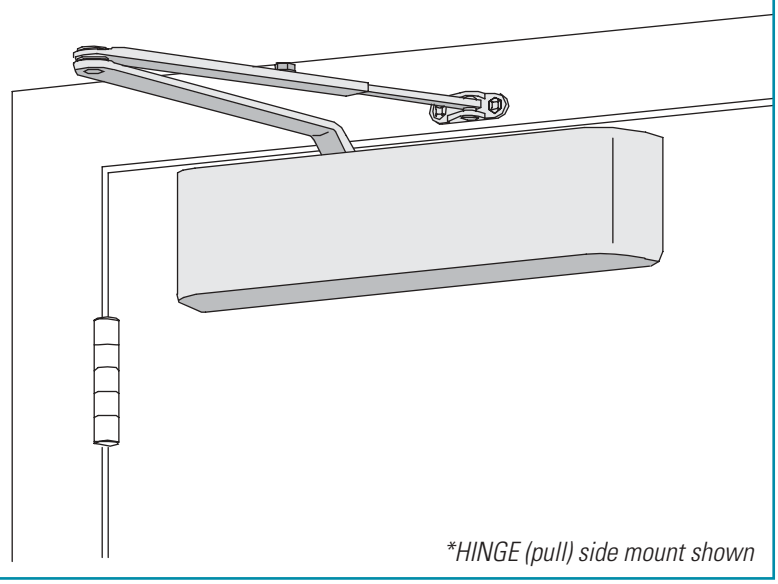

**HINGE (pull) side mount shown*

The 1520 is a versatile cast iron closer with a low profile cover designed to complement our heavy duty 4000 Series closers. This universal closer offers the choice of three mountings, multiple arm options, and a standard metal cover.

The 1520 Series is UL and ULC listed for self-closing doors without hold-open. Tested and certified under ANSI Standard A156.4, grade one.

- Standard 1520 series closer shipped with regular arm with PA shoe and wood and self-tapping machine screw pack. See 1520 Series page 35 for options.
- Non-sized 1521 cylinder for exterior doors to 36" (914 mm) and interior doors to 48" (1219 mm).
- Closer mounts hinge side, top jamb, and parallel arm, on either right or left swinging doors.
- Closer meets ADA requirements. See 1520 Series page 36.
- Standard or optional custom powder coat finish.
- Optional plated finish on cover, arm and fasteners.
- Optional SRI primer for installations in corrosive conditions.

MOUNTING					FINISH		COVER			CYLINDER				*ARM FUNCTION						
HINGE (PULL) SIDE	TOP JAMB (PULL)	TOP JAMB (PUSH)	PARALLEL ARM	STOP FACE	POWDER COAT	PLATED	PLASTIC	METAL	DESIGNER SERIES	NON-HANDED	NON-SIZED	ACCESSIBILITY	DELAYED ACTION	REGULAR (DOUBLE)	STANDARD (SINGLE)	HEAVY DUTY	HOLD-OPEN	EDA/HEDA	CUSH/HCUSH	SCUSH/SHCUSH
●	○	●	●	○	●	●	○	●	○	●	●	♿	○	180°	○	○	180°	○	○	110°

● *Available*
○ *Not available*
♿ *Closer available with less than 5.0 lbs. opening force on 36" door.*
* *Maximum opening/hold-open point with standard template.*

LCN CLOSERS
121 W. RAILROAD AVE.
P.O. BOX 100
PRINCETON, IL, USA 61356-0100

PHONE 800-526-2400
FAX 800-248-1460
www.lcnclosers.com
3/04

LCN 1520 SERIES

HINGE (PULL) SIDE MOUNTING

MAXIMUM OPENING

Can be templated for 180°.

Hold-open points up to maximum opening with hold-open arm.

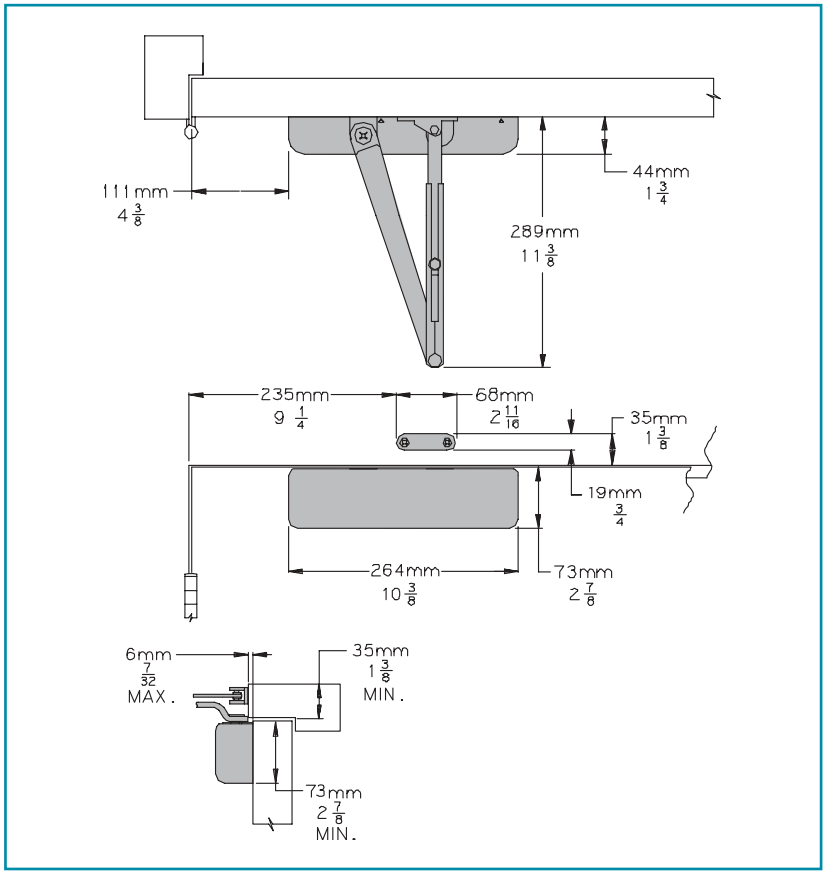

- **Butt Hinges** should not exceed 5" (127 mm) in width.
- **Auxiliary Stop** is recommended at hold-open point or where a door cannot swing 180°.
- **Reveal** should not exceed 3/16" (5 mm) for regular arm or 3/16" (5 mm) for hold-open arm.
- **Top Rail** requires 2 7/8" (73 mm) minimum.
- **Clearance** of 1 3/4" (44 mm), behind door required for installation.

Options

- Hold-open arm.

LCN CLOSERS
121 W. RAILROAD AVE.
P.O. BOX 100
PRINCETON, IL, USA 61356-0100

PHONE 800-526-2400
FAX 800-248-1460
www.lcnclosers.com
3/04

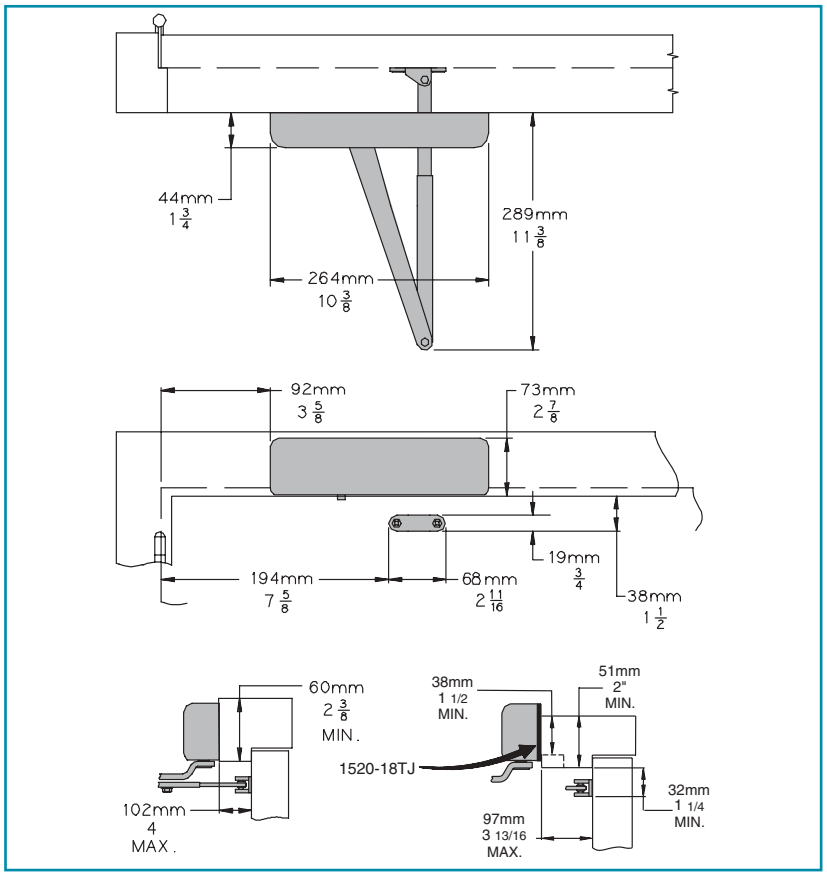

TOP JAMB (PUSH SIDE) MOUNTING

MAXIMUM OPENING

Can be templated for 180°.

Hold-open points up to maximum opening with hold-open arm.

- **Butt Hinges** should not exceed 5" (127 mm) in width.
- **Auxiliary Stop** is recommended at hold-open point or where the door cannot swing 180°.
- **Reveal** up to 3 1/2" (89 mm) allows 180° opening.
- **Top Rail** requires 1 1/2" (38 mm) minimum from stop.
- **Head Frame** less than 2 1/4" (57 mm) requires PLATE, 1520-18TJ. Plate requires 1 1/2" (38 mm) minimum.

Options

- Hold-open arm.
- Long arm.

LCN CLOSERS
121 W. RAILROAD AVE.
P.O. BOX 100
PRINCETON, IL, USA 61356-0100

PHONE 800-526-2400
FAX 800-248-1460
www.lcnclosers.com
3/04

PARALLEL ARM (PUSH SIDE) MOUNTING

Optional mounting requires PA SHOE, 1520-62PA for REGULAR or HOLD-OPEN arms. 1521 closer with PA SHOE includes 1520-201 FIFTH HOLE SPACER to support PA SHOE.

MAXIMUM OPENING

REGULAR or HOLD-OPEN arms can be templated for 180°.

Hold-open points up to maximum opening with hold-open arm.
SPRING CUSH arms an be templated for maximum opening/hold open point at
85°,
Ⓐ = 4" (102 mm)
Ⓑ = 10 1/2" (267 mm)
90°,
Ⓐ = 3 3/8" (86 mm)
Ⓑ = 9 3/4" (248 mm)
100°.
Ⓐ = 2 3/8" (60 mm)
Ⓑ = 8 3/4" (222 mm)
or 110°.
Ⓐ = 1 1/2" (28mm)
Ⓑ = 7 7/8" (200 mm)

SPRING HCUSH hold-open points are approximately 5° less than templated stop points.

- **Butt Hinges** should not exceed 5" (127 mm) in width.
- **Auxiliary Stop** is recommended at hold-open point or where a door cannot swing maximum opening.
- **Clearance** for 1520-62PA shoe is 4" (102 mm) from door face. SPRING CUSH arm is 5 1/2" (140 mm) from door face.
- **Top Rail** less than 5" (127 mm) measured from the stop requires PLATE, 1520-18PA. Plate requires 1 3/4" (44 mm) minimum.
- **Stop Width** minimum 1" (25 mm).

Options
- Hold-open arm.
- Spring Cush arm.
- Spring HCUSH arm.

1520 PARALLEL ARM MOUNT

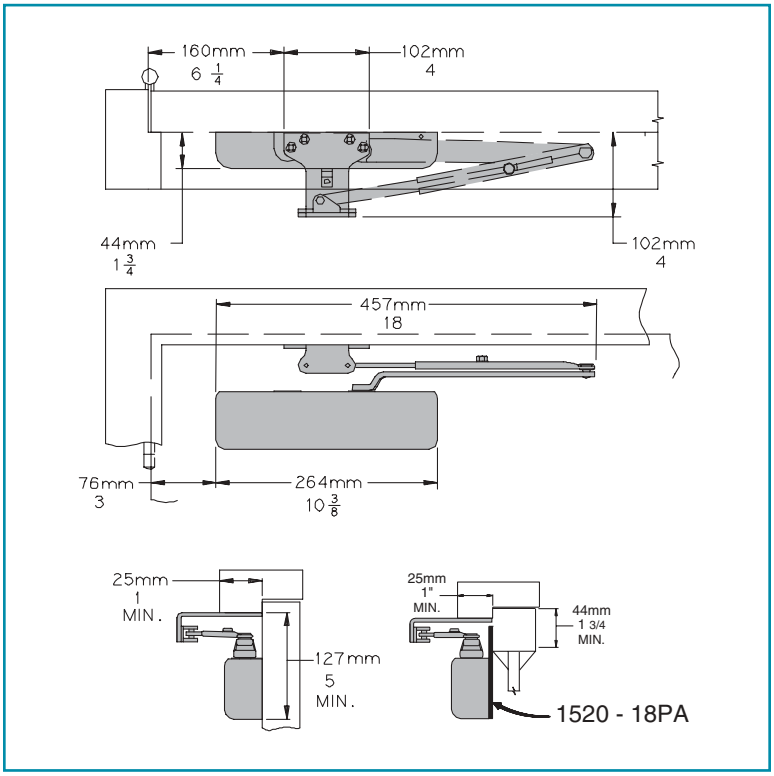

1520 SPRING CUSH MOUNT

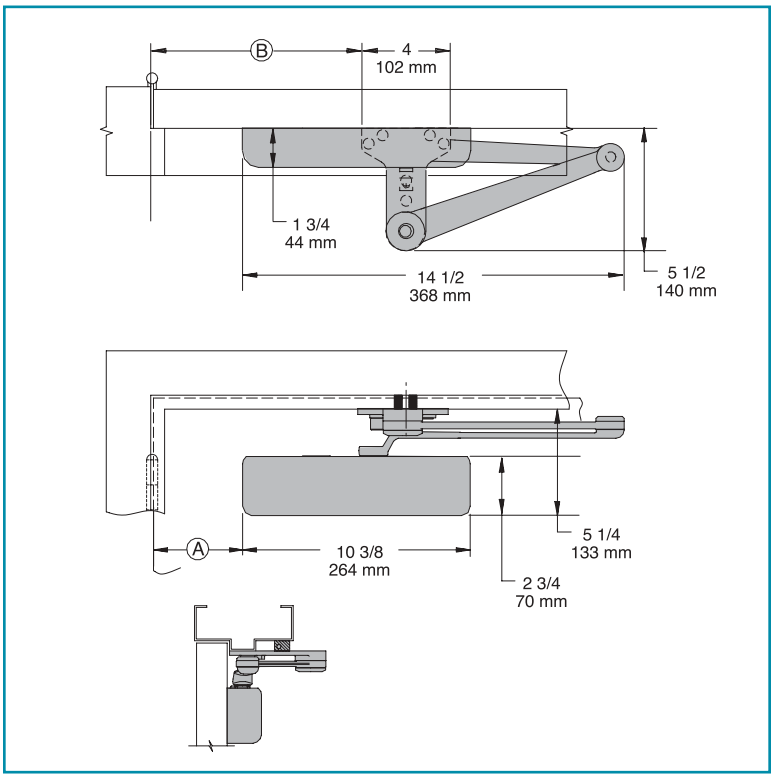

LCN CLOSERS
121 W. RAILROAD AVE.
P.O. BOX 100
PRINCETON, IL, USA 61356-0100
PHONE 800-526-2400
FAX 800-248-1460
www.lcnclosers.com
3/04

CYLINDERS

CYLINDER, 1520-3071
Standard, non-handed cast iron cylinder assembly.

COVERS

COVER, 1520-72MC
Non-handed metal cover.

ARMS

REGULAR ARM, 1520-3077
Non-handed arm mounts pull side or top jamb with shallow reveal. 1521 closer includes PA SHOE, 1520-62PA required for parallel arm mounting.

PA SHOE, 1520-62PA
Required for parallel arm mounting.

AUXILIARY SHOE, 1520-62A requires a top rail of 7" (178 mm). Optional shoe replaces -62PA for parallel arm mounting of regular arm with overhead holder/stop.
Special template required.

LONG ARM, 1520-3077L
Optional, non-handed arm includes LONG ROD AND SHOE, 1520-79LR for top jamb mount with deep reveals.

HOLD-OPEN ARM, 1520-3049
Optional, non-handed arm mounts pull side or top jamb with shallow reveal. Hold-open adjustable at shoe.
PA SHOE,1520-62PA required for parallel arm mounting.

SPRING CUSH ARM 1520-3077SCNS
Optional non-handed parallel arm for abusive applications features solid forged steel main arm and forearm with spring loaded stop in the soffit shoe.

SPRING HCUSH ARM, 1520-3049SCNS
Optional, non-handed parallel arm for abusive applications features solid forged steel main arm and forearm with spring loaded stop in the soffit shoe. Handle controls hold-open function.

INSTALLATION ACCESSORIES

PLATE, 1520-18TJ
Required for top jamb mounting where head frame is less than 2 1/4" (57 mm) or flush ceiling condition exists. Plate requires 1 1/2" (38 mm) minimum.

PLATE, 1520-18PA
Required for parallel arm mounting where top rail is less than 5" (127 mm), measured from the stop.
Plate requires 1 3/4" (44 mm) minimum.

CUSH SHOE SUPPORT, 1520-30
Provide anchorage for fifth screw used with CUSH arms where reveal is less than 3 1/16" (78 mm).

BLADE STOP SPACER, 1520-61
Lowers parallel arm shoe to clear 1/2" (13 mm) blade stop.

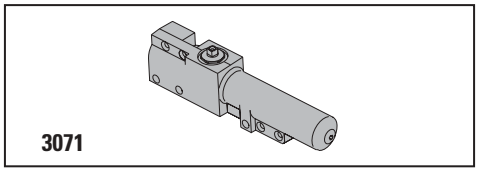

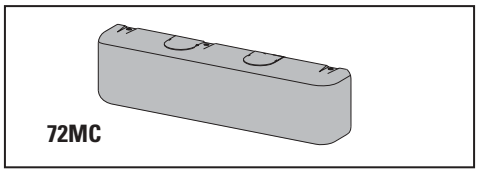

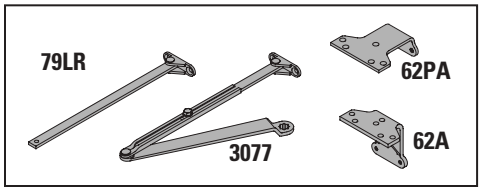

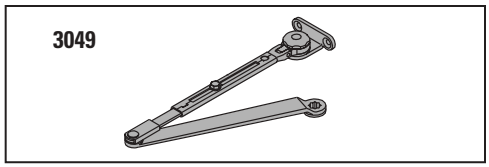

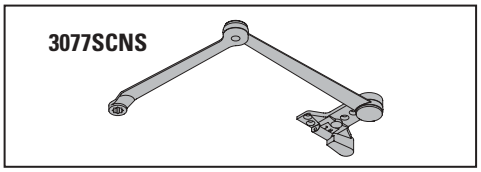

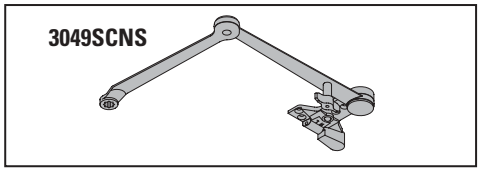

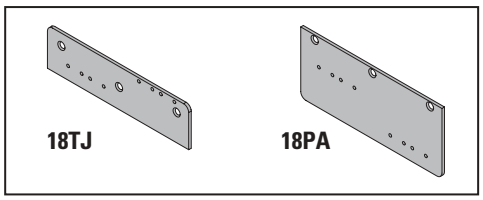

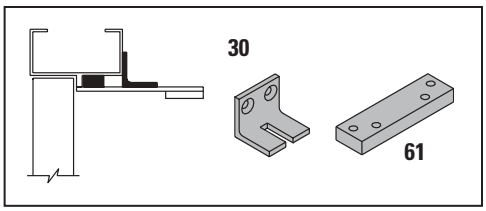

LCN CLOSERS
121 W. RAILROAD AVE.
P.O. BOX 100
PRINCETON, IL, USA 61356-0100

PHONE 800-526-2400
FAX 800-248-1460
www.lcnclosers.com
3/04

LCN 1520 SERIES

ORDERING INFORMATION

TABLE OF SIZES

Non-sized 1521 cylinder is adjustable from sizes 1 to 4 and is shipped set to size 3.

→ Indicates recommended range of door width for closer size.

EXTERIOR (and VESTIBULE) DOOR WIDTH

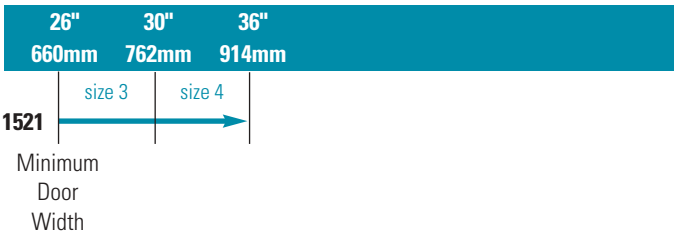

INTERIOR DOOR WIDTH

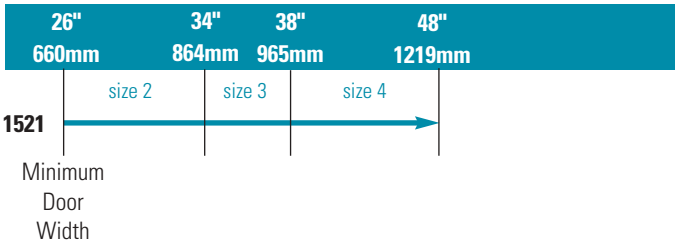

REDUCED OPENING FORCE 1520 CLOSERS

CAUTION ! Any manual door closer, including those certified by BHMA to conform to ANSI Standard A156.4, that is selected, installed and adjusted based on ADA or other reduced opening force requirements may not provide sufficient power to reliably close and latch a door.

Refer to POWER OPERATORS section for information on systems that meet reduced opening force requirements without affecting closing power.

	DOOR WIDTH	36"	42"	48"
♿	8.5* lbs.	1521	1521	1521
	5.0* lbs.	1521	1521	1521

** Maximum opening force*

HOW-TO-ORDER 1520 SERIES CLOSERS

1. SELECT FINISH

☐ Standard Powder Coat _____
Aluminum, Dark Bronze , Tan, Statuary, Light Bronze, Black, Brass.

Closer will be shipped with:
- STANDARD CYLINDER,
- STANDARD METAL COVER,
- REGULAR ARM (with PA SHOE)
- Wood and Self-tapping Machine screw pack unless options listed below are indicated.

CLOSER OPTIONS

ARM

☐ Long arm (LONG)
☐ Hold-Open (H)
☐ SPRING CUSH (SCUSH)
☐ SPRING HCUSH (SHCUSH)

FINISH

☐ Custom Powder Coat (RAL) _____
☐ Plated Finish, US _____
☐ SRI primer

SCREW PACK

☐ TB*, Wood & Machine Screws (TBWMS)

INSTALLATION ACCESSORIES

☐ Plate, 1520-18PA
☐ Plate, 1520-18TJ

LCN CLOSERS
121 W. RAILROAD AVE.
P.O. BOX 100
PRINCETON, IL, USA 61356-0100

PHONE 800-526-2400
FAX 800-248-1460
www.lcnclosers.com

3/04