FEATURES

CONCEALED (IN FRAME) MOUNTING

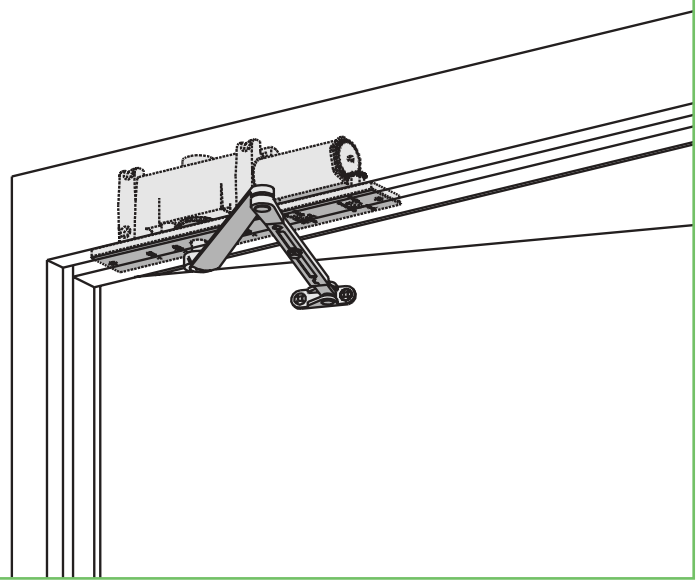

The concealed 5010 Series is a heavy duty closer designed for institutional, high traffic, or other applications exposed to weather or abuse. The double lever arm provides superior door control and a choice of finishes, cylinder functions, and arm functions that meet virtually all architectural requirements.

The 5010 Series is UL listed with regular arms for self-closing doors. Tested and certified under ANSI Standard A156.4.

- Standard 5010 series closer shipped with regular arm, metal finish plate, and wood and machine screw pack. See 5010 Series page 27 for options.
- Sized cylinders for interior doors to 5'0" and exterior doors to 4'0".
- Handed for right or left swinging doors.
- For hollow metal or wood, door and frame.
- Aluminum frame requires minimum 4" (102 mm) x 4" tube.
- Closers to meet ADA requirements. See 5010 Series page 28.
- Standard or optional custom powder coat finish.
- Optional plated finish on finish plate, arm, and fasteners.
- Optional SRI primer for installations in corrosive conditions.

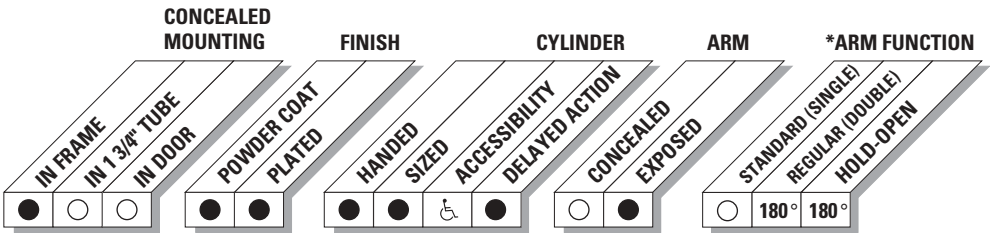

● *Available*
○ *Not available*

♿ *Closer available with less than 5.0 lbs. opening force on 36" door.*
**Maximum opening/hold-open point with standard template. See individual closer series for degrees of opening per installation.*

LCN CLOSERS
121 W. RAILROAD AVE.
P.O. BOX 100
PRINCETON, IL, USA 61356-0100

PHONE 800-526-2400
FAX 800-248-1460
www.lcnclosers.com
3/04

LCN 5010 SERIES

MOUNTING DETAILS

CONCEALED MOUNTING

For interior or exterior doors.
Single acting cylinder in head frame.
Exposed arm on push side of door.

MAXIMUM OPENING

Butt hung doors can be templated for 100°,

Ⓐ = 10 3/16" (259 mm)
Ⓑ = 12" (305 mm)

or 180°,

Ⓐ = 5 1/2" (140 mm)
Ⓑ = 7 5/16" (186 mm)
trim permitting.

Hold-open points up to maximum opening with hold-open arms.

Center pivot mounting restricts opening to 140°.

Offset pivot mounting allows up to 180°, trim permitting.

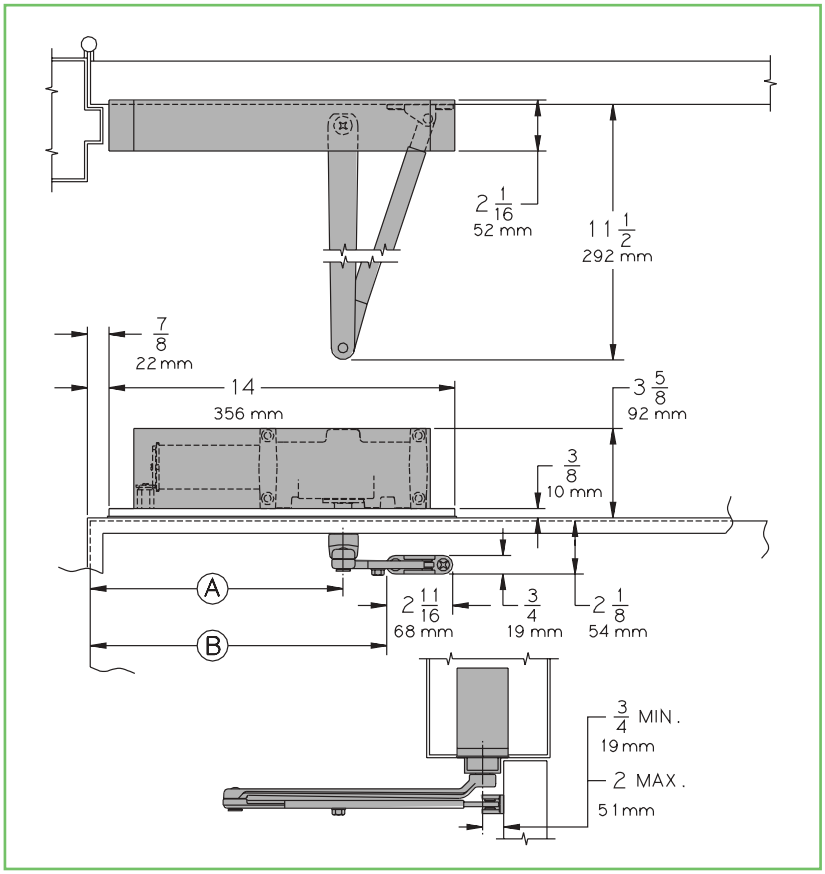

- **Butt Hinges** should not exceed 6" (152 mm) in width.
- **Auxiliary Stop** is recommended at hold-open point or where a door cannot swing 180°.
- **Top Rail** minimum 2 1/8" (54 mm) required.
- **Delay Action** Add suffix "DEL" to selected cylinder (eg. 5014 DEL).
  Not available with 5016 cylinder.
  Delays closing from maximum opening to approximately 70°.
  Delay time adjustable up to approximately 1 minute.

Options

- Delayed action cylinder.
- Hold-open, H180 hold-open.

Special Templates

Customized installation templates or products may be available to solve unusual applications. Contact LCN for assistance

LCN CLOSERS
121 W. RAILROAD AVE.
P.O. BOX 100
PRINCETON, IL, USA 61356-0100

PHONE 800-526-2400
FAX 800-248-1460
www.lcnclosers.com

3/04

CYLINDERS

CYLINDER, 5010-3071

Standard, handed, cast iron cylinder assembly with mounting plate. For various applications see "Table of Sizes" on 5010 Series page 28

.

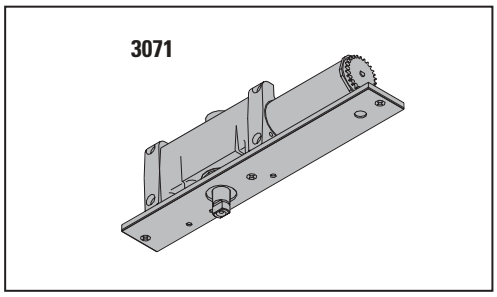

ARMS

REGULAR ARM, 5010-3077

Non-handed arm.

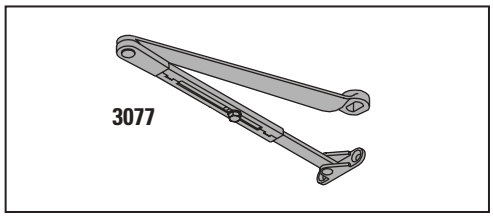

HOLD-OPEN ARM, 5010-3049

Optional, handed arm provides hold-open function for 100° template, adjustable at elbow.

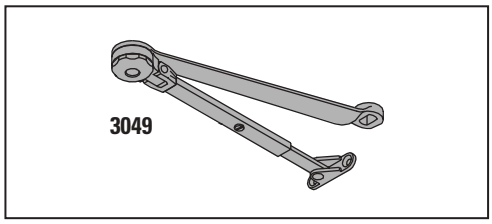

HOLD-OPEN H180 ARM, 5010-3049H180

Optional, handed arm provides hold-open function for 180° template, adjustable at shoe.

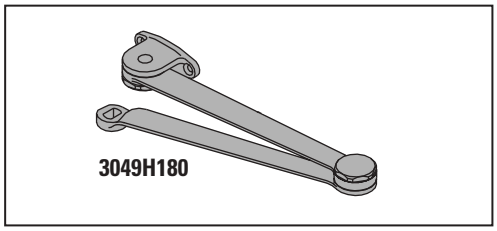

LCN CLOSERS
121 W. RAILROAD AVE.
P.O. BOX 100
PRINCETON, IL, USA 61356-0100

PHONE 800-526-2400
FAX 800-248-1460
www.lcnclosers.com
3/04

LCN 5010 SERIES

ORDERING INFORMATION

TABLE OF SIZES

Select closer based on width of door.
Series cylinders available in size 1, 2, 3, 4, 5, or 6.
Closing power of all 5010 Series closers may be increased 50%.
Specify next higher size closer where strong drafts exist.
Delayed action not available with 5016 cylinder.

→ Indicates recommended range of door width for closer size.

EXTERIOR (and VESTIBULE) DOOR WIDTH

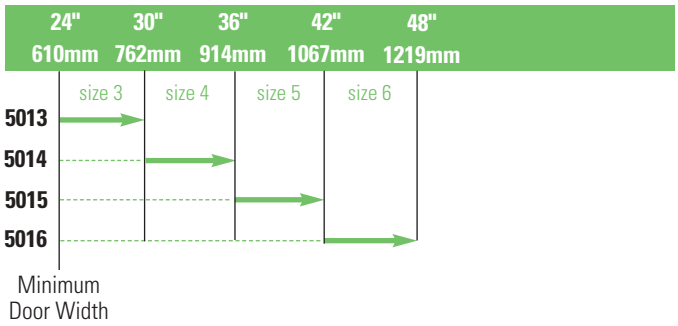

INTERIOR DOOR WIDTH

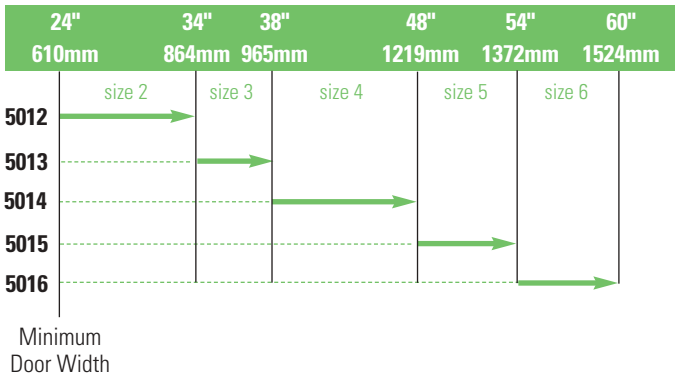

REDUCED OPENING FORCE 5010 CLOSERS

CAUTION ! Any manual door closer, including those certified by BHMA to conform to ANSI Standard A156.4, that is selected, installed and adjusted based on ADA or other reduced opening force requirements may not provide sufficient power to reliably close and latch a door.

Refer to POWER OPERATORS section for information on systems that meet reduced opening force requirements without affecting closing power.

	DOOR WIDTH	36"	42"	48"
♿	8.5* lbs.	5012	5013	5013
	5.0* lbs.	5011	5011	5012

** Maximum opening force*

HOW-TO-ORDER 5010 SERIES CLOSERS

1. SELECT CYLINDER SIZE.

☐ 5011 (ADA)
☐ 5012
☐ 5013
☐ 5014
☐ 5015
☐ 5016 (DEL not available)

2. SPECIFY HAND

☐ RH
☐ LH

3. SPECIFY FINISH

☐ Standard Powder Coat _____
Aluminum, Dark Bronze , Tan, Statuary, Light Bronze, Black, Brass.

Closer will be shipped with:
- FINISH PLATE,
- REGULAR ARM,
- WOOD and MACHINE SCREW PACK, unless options listed below are selected.

CLOSER OPTIONS

CYLINDER FUNCTION

☐ Delayed Action (DEL)

ARM

☐ Hold-Open (H)
☐ H180 Hold-Open (H180)

FINISHES

☐ Custom Powder Coat (RAL)_____
☐ Plated Finish, US _____
☐ SRI primer

SCREW PACK

☐ TORX Machine Screw (TORX)

SPECIAL TEMPLATE

☐ ST- _____

LCN CLOSERS
121 W. RAILROAD AVE.
P.O. BOX 100
PRINCETON, IL, USA 61356-0100

PHONE 800-526-2400
FAX 800-248-1460
www.lcnclosers.com
3/04