FEATURES

CONCEALED (IN FRAME) MOUNTING

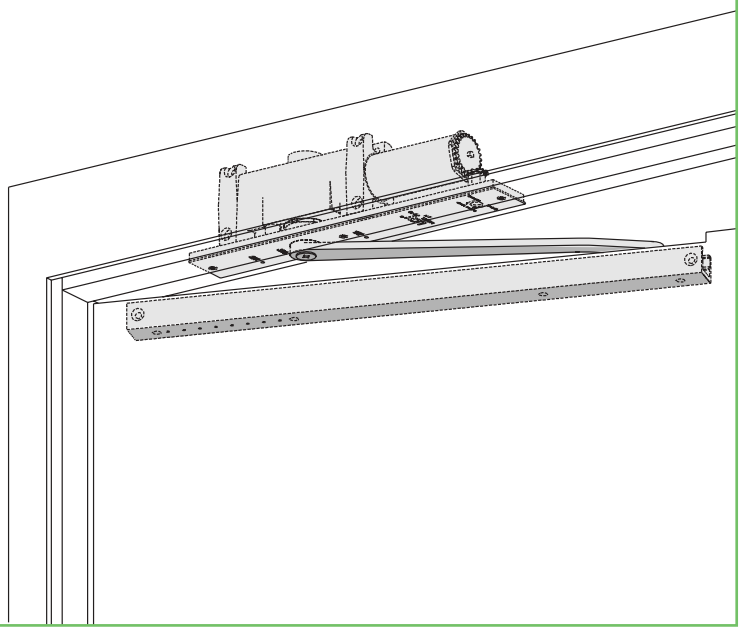

The concealed 2010 Series is a heavy duty closer designed to provide complete concealment. The single lever arm and roller assembly provide smooth, quiet door control and the choice of finishes and track functions meet virtually all architectural requirements.

The 2010 Series is UL & ULC listed for self-closing doors without hold-open. Tested and certified under ANSI Standard A156.4, grade 1.

- Standard 2010 series closer shipped with standard arm, standard track, metal finish plate and wood and machine screw pack. See 2010 Series page 9 for options.
- Sized cylinders for interior doors to 5'0" and exterior doors to 4'0".
- Handed for right or left swinging doors.
- For aluminum, hollow metal, or wood, doors and frames.
- Aluminum frame requires minimum 4" x 4" (102 mm) tube.
- Closers to meet ADA requirements. See 2010 Series page 10.
- Standard or optional custom powder coat finish.
- Optional plated finish on arm, fasteners and finish plate.
- Optional SRI primer for installations in corrosive conditions.

CONCEALED MOUNTING			FINISH		CYLINDER				ARM		*ARM FUNCTION		
IN FRAME	IN 1 3/4" TUBE	IN DOOR	POWDER COAT	PLATED	HANDED	SIZED	ACCESSIBILITY	DELAYED ACTION	CONCEALED	EXPOSED	STANDARD (SINGLE)	REGULAR (DOUBLE)	HOLD-OPEN
●	○	○	●	●	●	●	♿	○	●	○	180°	○	110°

● *Available*
○ *Not available*

♿ *Closer available with less than 5.0 lbs. opening force on 36" door.*
**Maximum opening/hold-open point with standard template. See individual closer series for degrees of opening per installation.*

LCN CLOSERS
121 W. RAILROAD AVE.
P.O. BOX 100
PRINCETON, IL, USA 61356-0100

PHONE 800-526-2400
FAX 800-248-1460
www.lcnclosers.com
3/04

CONCEALED MOUNTING

For interior or exterior doors.
Single acting cylinder in head frame.
Concealed arm and track in door top rail.

MAXIMUM OPENING

Butt hinge template allows 180°, trim permitting.
Limited to 110° when optional bumper is installed.
Adjustable hold-open points from 85° to 110°, with hold-open track.

Consult factory if door will be held open at 180°

Offset pivot template allows 110°, trim permitting.
Limited to 95° when optional bumper is installed.
Adjustable hold-open points from 75° to 95°, with hold-open track.

Center pivot template allows 120°, trim permitting.
Limited to 95° when optional bumper is installed.
Adjustable hold-open points from 75° to 95°, with hold-open track.

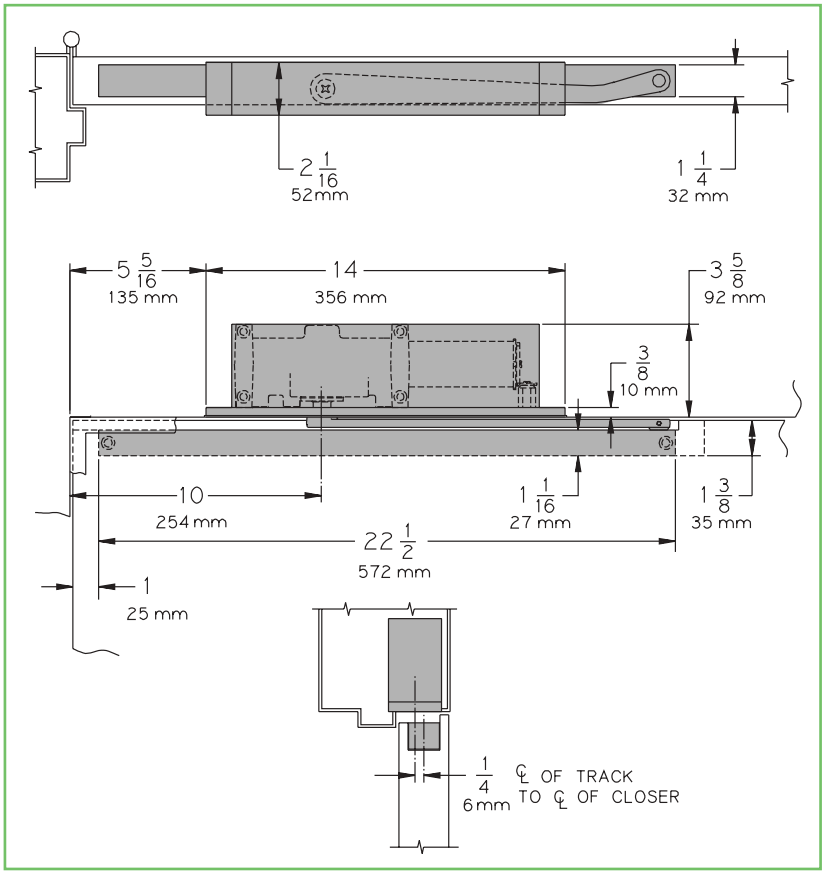

- **Butt Hinges** should not exceed 5" (127 mm) in width.
- **Auxiliary Stop** is recommended where a door cannot swing 180°. Optional track bumper assembly assists backcheck in cushioning the opening swing of the door. It is not intended to replace an auxiliary stop.
- **Top Rail** 1 3/8" (35 mm) mortise required.
  With Fire Shield, 1 13/32" (36 mm) mortise required.
  5/16" (8 mm) cutout required at top of the door, stop face only.
- **Door Thickness** 1 3/4" (44 mm) minimum.
- **Hollow Metal Frame** Consult factory for installation instructions.

Options

- Standard track with Bumper
- Hold-open track
- Hold-open track with Bumper
- Fire Shield

Special Templates

Customized installation templates or products may be available to solve unusual applications.
Contact LCN for assistance.

LCN CLOSERS
121 W. RAILROAD AVE.
P.O. BOX 100
PRINCETON, IL, USA 61356-0100

PHONE 800-526-2400
FAX 800-248-1460
www.lcnclosers.com
3/04

CYLINDERS

CYLINDER, 2010-3071
Standard, handed, cast iron cylinder assembly with mounting plate. For various applications see "Table of Sizes" on 2010 Series page 10.

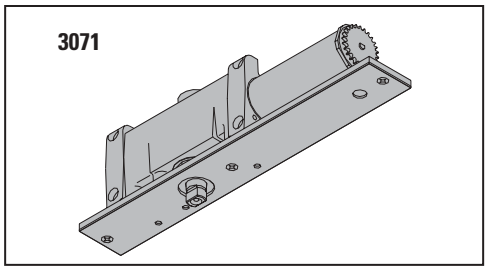

ARM

STANDARD ARM, 2010-3077T
Handed arm.
Track roller not included with arm.

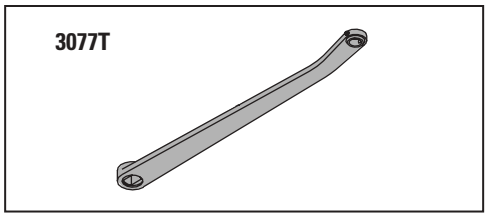

TRACKS

STANDARD TRACK, 2010-3038
Standard, non hold-open, non-handed track.
Will accept hold-open clip and/or bumper assembly.

STANDARD TRACK with BUMPER, 2010-3038B
Optional, non hold-open, non-handed track with bumper.
Will accept hold-open clip.

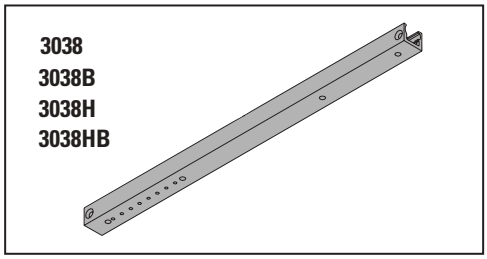

HOLD-OPEN TRACK, 2010-3038H
Optional, non-handed hold-open track.
Will accept bumper assembly.

HOLD-OPEN TRACK with BUMPER, 2010-3038HB
Optional, non-handed hold-open track with bumper.

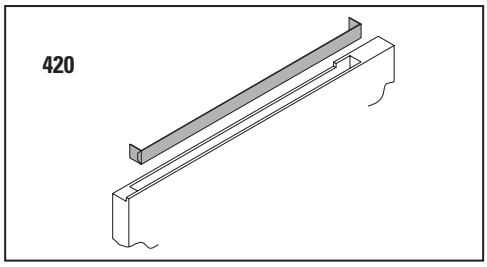

INSTALLATION ACCESSORIES

FIRE SHIELD, 2010-420
22 gauge steel liner mounts in the track mortise of the door's top rail for 20 minute labeled wood doors.

TRACK BUMPER, 2010-169
Mounts in track to assist backcheck. Limits maximum opening.
Consists of bumper, bumper post, and mounting screw.
NOTE: Track bumper does not replace auxiliary stop.

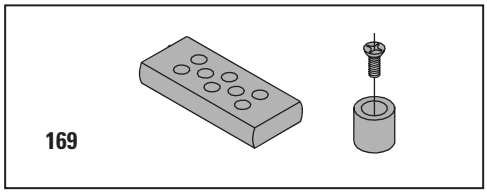

HOLD-OPEN CLIP, 2010-3054
Mounts in track to provide hold-open function.
Hold-open point controlled by clip location.

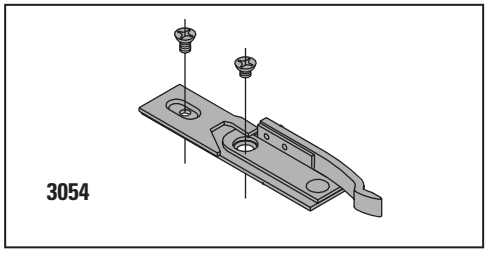

TRACK ROLLER, 2010-3034
Quiet, low friction roller assembly.
Shoulder dimension "X" = 1/16" (2mm).

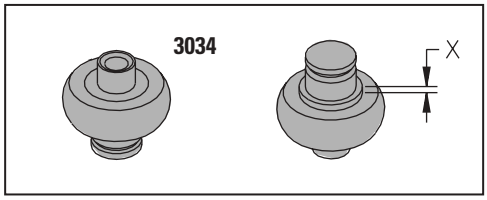

LCN CLOSERS
121 W. RAILROAD AVE.
P.O. BOX 100
PRINCETON, IL, USA 61356-0100

PHONE 800-526-2400
FAX 800-248-1460
www.lcnclosers.com
3/04

LCN 2010 SERIES

ORDERING INFORMATION

TABLE OF SIZES

Select closer based on width of door.
2010 Series cylinders available in size 1, 3, 4, 5, or 6.
Closing power of all 2010 Series closers may be increased 15%.
Specify next higher size closer where strong drafts exist.

→ Indicates recommended range of door width for closer size.

EXTERIOR (and VESTIBULE) DOOR WIDTH

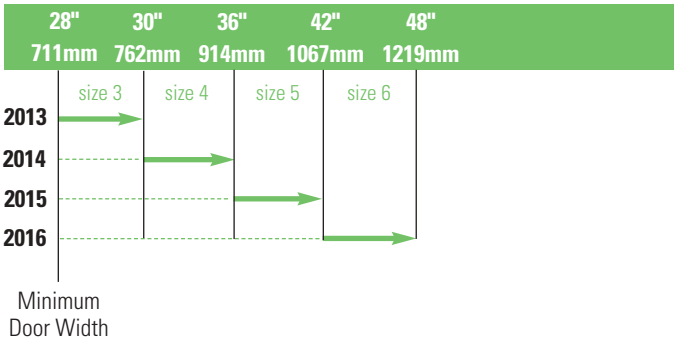

INTERIOR DOOR WIDTH

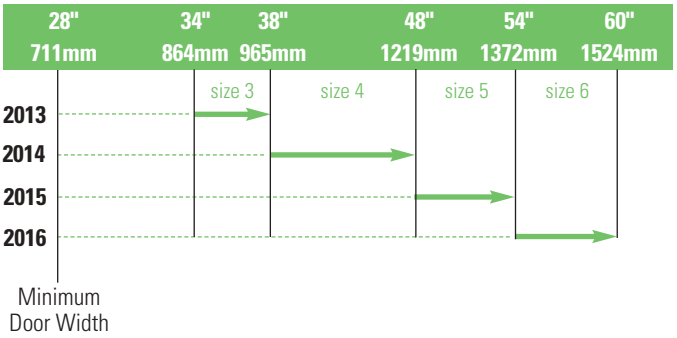

REDUCED OPENING FORCE 2010 CLOSERS

CAUTION ! Any manual door closer, including those certified by BHMA to conform to ANSI Standard A156.4, that is selected, installed and adjusted based on ADA or other reduced opening force requirements may not provide sufficient power to reliably close and latch a door.

Refer to POWER OPERATORS section for information on systems that meet reduced opening force requirements without affecting closing power.

	DOOR WIDTH	36"	42"	48"
♿	8.5* lbs.	2014	2014	2015
	5.0* lbs.	2011	2011	2013

** Maximum opening force*

HOW-TO-ORDER 2010 SERIES CLOSERS

1. SELECT CYLINDER SIZE

☐ 2011 (ADA)
☐ 2013
☐ 2014
☐ 2015
☐ 2016

2. SPECIFY HAND

☐ RH
☐ LH

3. SPECIFY FINISH

☐ Standard Powder Coat _____
Aluminum, Dark Bronze , Tan, Statuary, Light Bronze, Black, Brass.

Closer will be shipped with:
- FINISH PLATE,
- TRACK ARM,
- TRACK ROLLER,
- STANDARD TRACK,
- WOOD and MACHINE SCREW PACK, unless options listed below are selected.

CLOSER OPTIONS

TRACK

☐ Standard with Bumper (BUMPER)
☐ Hold-open (H)
☐ Hold-open with Bumper (HBUMPER)

FINISHES

☐ Custom Powder Coat (RAL)_____
☐ Plated Finish, US _____
☐ SRI primer

SCREW PACK

☐ TORX Machine Screw (TORX)

INSTALLATION ACCESSORIES

☐ Fire Shield, 2010-420

SPECIAL TEMPLATE

☐ ST- _____

LCN CLOSERS
121 W. RAILROAD AVE.
P.O. BOX 100
PRINCETON, IL, USA 61356-0100
PHONE 800-526-2400
FAX 800-248-1460
www.lcnclosers.com
3/04