FEATURES

CLOSER MOUNTS
***HINGE (PULL) SIDE**
TOP JAMB (PULL SIDE)
STOP FACE (PUSH SIDE)

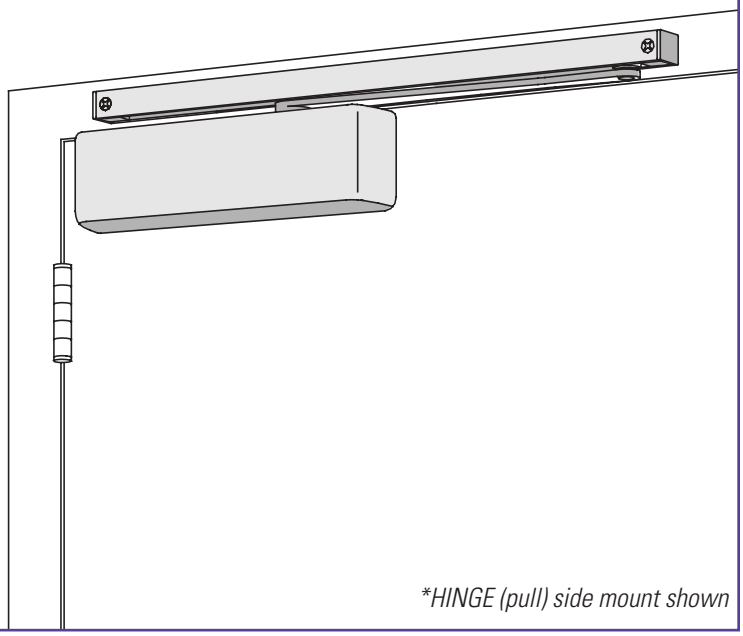

**HINGE (pull) side mount shown*

The 4040T SMOOTHEE® is LCN's most flexible heavy duty track closer designed specifically for interior doors in institutional and other rugged high traffic applications.

- **Cast Iron**
- **Forged Steel Arm**
- **Double Heat Treated Steel Pinion**
- **All Weather Fluid**
- **Non-Handed**
- **Fast & Accurate Installation**
- **UL & ULC Listed**

- Standard 4040T series closer shipped with standard arm, standard track, track roller, standard plastic cover, and self reaming and tapping screws. See 4040T Series pages 41 & 42 for options
- Non-sized cylinders for interior doors to 4'0".
- Closer mounts pull side on door, pull side top jamb or push side on door.
- Closers to meet ADA requirements. See 4040T Series page 43.
- Standard or optional custom powder coat finish.
- Optional plated finish on cover, arm and fasteners.
- Optional SRI primer for installations in corrosive conditions.
- Consult factory for double egress applications.
- Optional designer series metal cover
- The 4040T Series is UL and ULC listed with a standard track for self-closing doors.
- Tested and certified under ANSI Standard A156.4, grade one.

MOUNTING					FINISH		COVER			CYLINDER					**ARM FUNCTION						
HINGE (PULL) SIDE	TOP JAMB (PULL)	TOP JAMB (PUSH)	PARALLEL ARM	STOP FACE	POWDER COAT	PLATED	PLASTIC	METAL	DESIGNER METAL	NON-HANDED	NON-SIZED	ACCESSIBILITY	DELAYED ACTION	AVB***	REGULAR (DOUBLE)	STANDARD (SINGLE)	HOLD-OPEN	FUSIBLE LINK	EDA/HEDA	CUSH/HCUSH	SCUSH/SHCUSH
●	●	○	○	●	●	●	●	●	●	●	●	♿	○	○	○	120°	110°	○	○	○	○

● *Available*
○ *Not available*

♿ *Closer available with less than 5.0 lbs. opening force on 36" door.*
***Maximum opening/hold-open point with standard template.*
**** Advanced Variable Backcheck*

LCN CLOSERS
121 W. RAILROAD AVE.
P.O. BOX 100
PRINCETON, IL, USA 61356-0100

PHONE 800-526-2400
FAX 800-248-1460
www.lcnclosers.com
3/04

MOUNTING DETAILS

HINGE (PULL) SIDE MOUNTING

MAXIMUM OPENING

Templating allows 120° with standard arm, limited to 110° when optional bumper is installed.

Hold-open points at 85°, 90°, 95°, 100°, 105° , or 110°, depending on the clip location in track.

Optional, Non-handed Designer Series Metal Cover

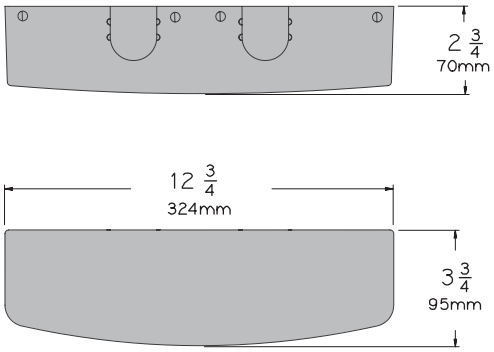

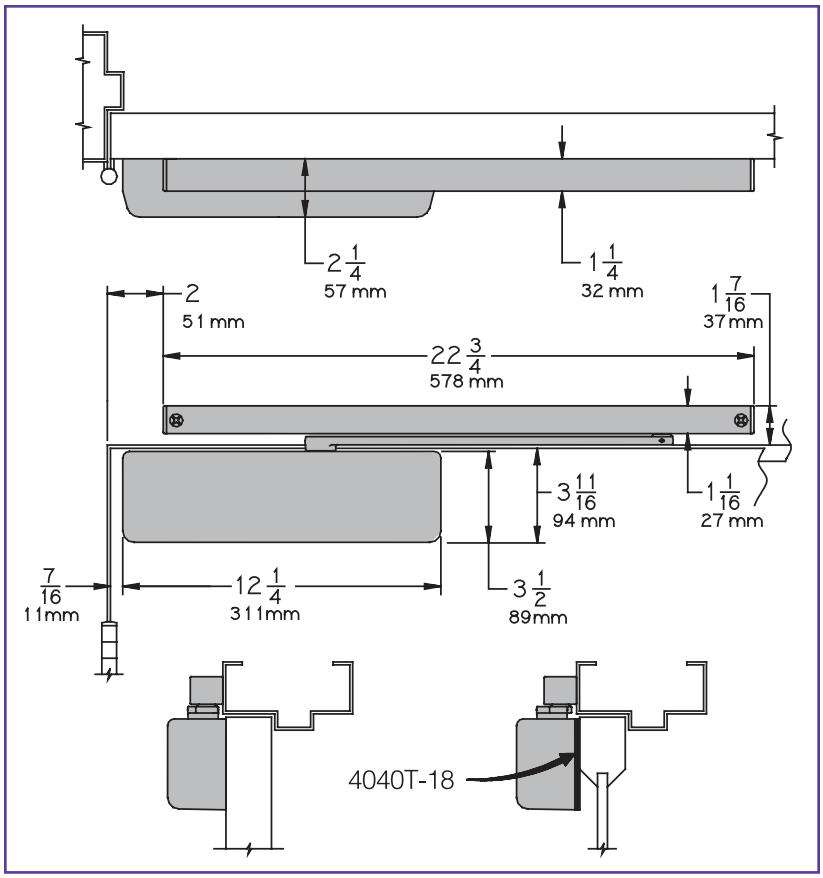

- **Butt Hinges** should not exceed 5" (127 mm) in width.
- **Auxiliary Stop** is recommended at hold-open point or where a door cannot swing 120°. Optional track bumper assembly assists backcheck in cushioning the opening swing of the door. It is not intended to replace an auxiliary stop.
- **Reveal** should not exceed 1/8" (3 mm) for standard arm.
- **Top Rail** less than 3 3/4" (95 mm) requires PLATE, 4040T-18. Plate requires 1 13/16" (44 mm) minimum. With Designer Series metal cover, use PLATE, 4040T-18DS1.
- **Head Frame** requires 1 1/4" (32 mm) minimum.
- **Clearance** of 2 1/4" (57 mm) behind door required for 90° installation.

Options

- Standard track with bumper, hold-open track, hold-open track with bumper.
- Metal or lead lined cover.
- Designer Series metal cover
- ST required for double egress applications. Consult factory

Special Templates

Customized installation templates or products may be available to solve unusual applications. Contact LCN for assistance.

LCN CLOSERS
121 W. RAILROAD AVE.
P.O. BOX 100
PRINCETON, IL, USA 61356-0100

PHONE 800-526-2400
FAX 800-248-1460
www.lcnclosers.com
3/04

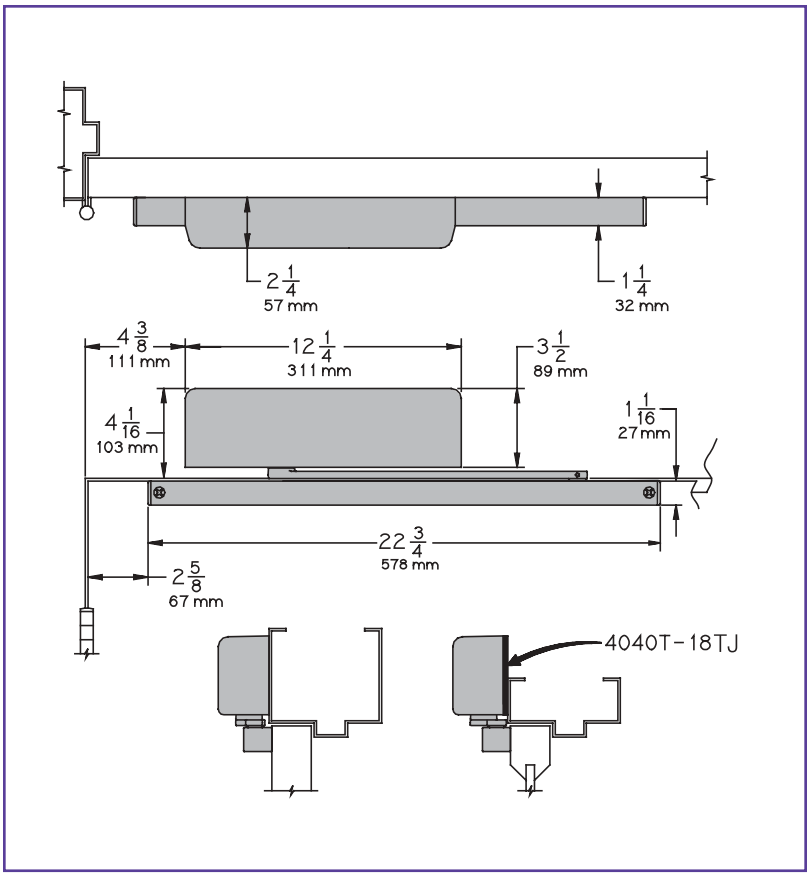

TOP JAMB (PULL SIDE) MOUNTING

MAXIMUM OPENING

Templating allows 180° with standard track arm, limited to 110° with optional bumper installed.

Consult factory if door will be held open at 180°

Hold-open points at 85°, 90°, 95°, 100°, 105° or 110° with hold-open tracks.

Optional, Non-handed Designer Series Metal Cover

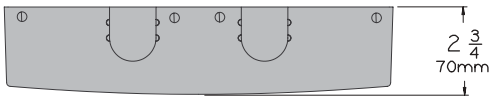

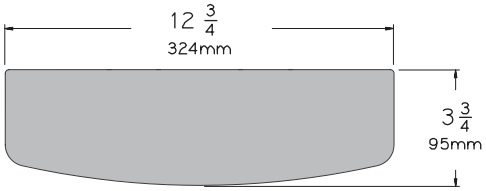

- **Butt Hinges** should not exceed 5" (127 mm) in width.
- **Auxiliary Stop** is recommended at hold-open point or where a door cannot swing 180°. Optional track bumper assembly assists backcheck in cushioning the opening swing of the door. It is not intended to replace an auxiliary stop.
- **Reveal** should not exceed 1/8" (3 mm).
- **Head Frame** less than 3 7/8" (98 mm), requires PLATE, 4040T-18TJ. Plate requires 1 3/4" (44 mm) minimum. With Designer Series metal cover, use PLATE, 4040T-18TJDS1.
- **Clearance** of 1 1/4" (32 mm) behind door required for 180° installation.

Options

- Standard track with bumper, hold-open track, hold-open track with bumper.
- Metal or lead lined cover.
- Designer Series metal cover

Special Templates

Customized installation templates or products may be available to solve unusual applications. Contact LCN for assistance.

LCN CLOSERS
121 W. RAILROAD AVE.
P.O. BOX 100
PRINCETON, IL, USA 61356-0100

PHONE 800-526-2400
FAX 800-248-1460
www.lcnclosers.com

3/04

STOP FACE (PUSH SIDE) MOUNTING

MAXIMUM OPENING

Templating allows 120° with standard track arm, limited to 110° with optional bumper tracks.

Hold-open points at 85°, 90°, 95°, 100°, 105° or 110° with hold-open tracks.

Optional, Non-handed Designer Series Metal Cover

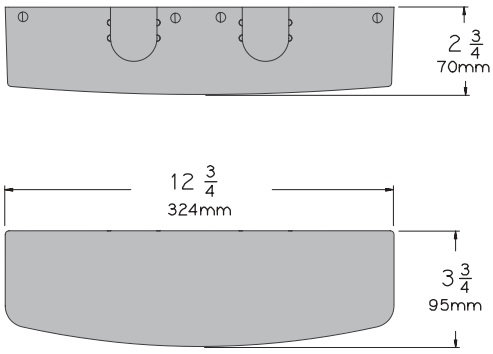

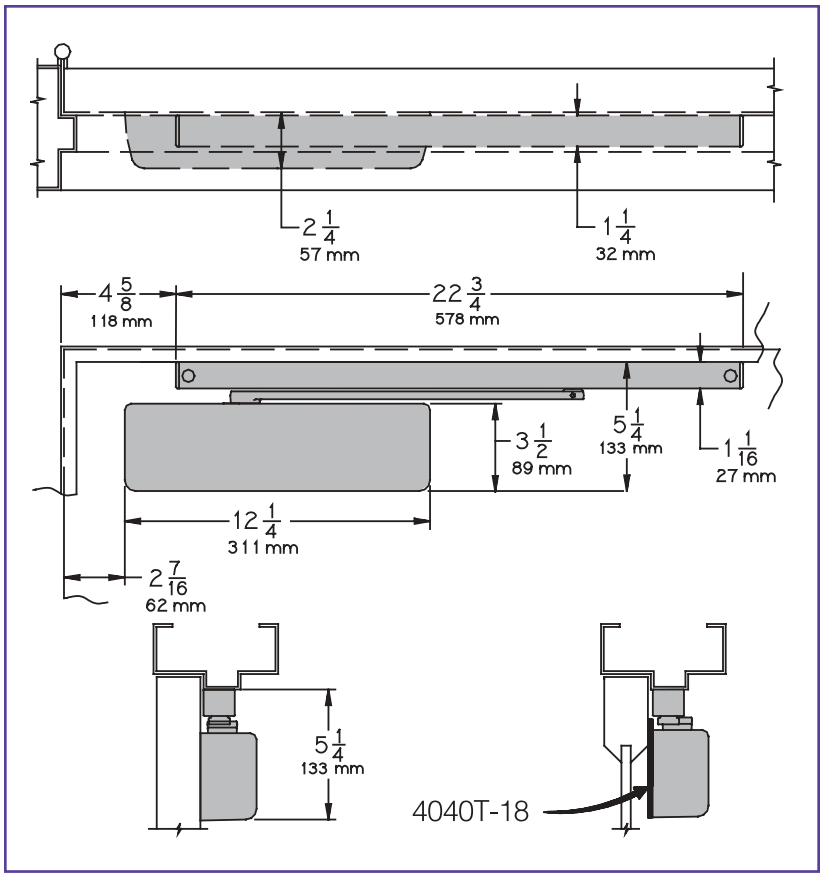

- **Butt Hinges** should not exceed 5" (127 mm) in width.
- **Auxiliary Stop** is recommended at hold-open point or where a door cannot swing 120°. Optional track bumper assembly assists backcheck in cushioning the opening swing of the door. It is not intended to replace an auxiliary stop.
- **Clearance** projects 2 1/4" (57 mm) from face of door.
- **Top Rail** less than 5 1/4" (133 mm) measured from the stop, requires PLATE, 4040T-18. Plate requires 3 1/2" (89 mm) minimum. With Designer Series metal cover, use PLATE, 4040T-18DS1.
- **Stop Width** minimum 1 1/4" (32 mm).

Options

- Standard track with bumper, hold-open track, hold-open track with bumper.
- Metal or lead lined cover.
- Designer Series metal cover

Special Templates

Customized installation templates or products may be available to solve unusual applications. Contact LCN for assistance.

LCN CLOSERS
121 W. RAILROAD AVE.
P.O. BOX 100
PRINCETON, IL, USA 61356-0100

PHONE 800-526-2400
FAX 800-248-1460
www.lcnclosers.com

3/04

CYLINDERS

CYLINDER, 4041T-3071

Standard, non-handed cast iron cylinder assembly.

COVERS

COVER, 4040T-72

Standard, non-handed plastic cover.

LEAD LINED COVER, 4040T-72LL

Optional, non-handed cover.

METAL COVER, 4040T-72MC

Optional, handed cover. Required for plated finishes and custom powder coat finishes.

DESIGNER SERIES METAL COVER, 4040T-72DS1

Optional, non-handed designer series metal cover.

ARMS

STANDARD ARM, 4040T-3077T

Non-handed arm.
Arm does not include track roller.

DOUBLE EGRESS ARM, 4040T-3077DE

Optional, handed arm for double egress doors and frames.
Arm does not include track roller.
Maximum reveal is 3 5/16" (84mm).

TRACKS

STANDARD TRACK, 4040T-3038

Standard, non hold-open, non-handed track.
Will accept hold-open clip and/or bumper assembly.

STANDARD TRACK with BUMPER, 4040T-3038B

Optional non hold-open, non-handed track with bumper assembly installed.
Will accept hold-open clip.

HOLD-OPEN TRACK, 4040T-3038H

Optional, non-handed track with hold-open clip installed.
Will accept bumper assembly.

HOLD-OPEN TRACK with BUMPER, 4040T-3038HB

Optional, non-handed track with hold-open clip and bumper assembly installed.

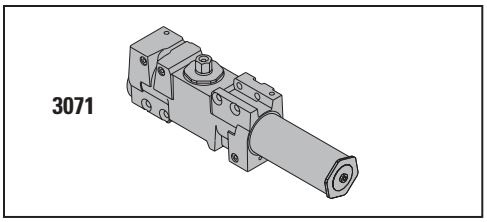

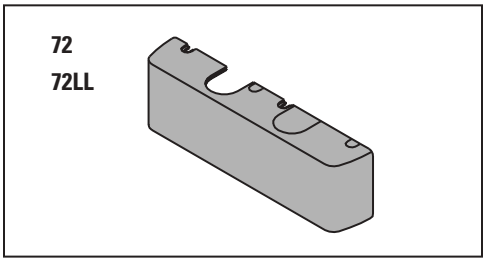

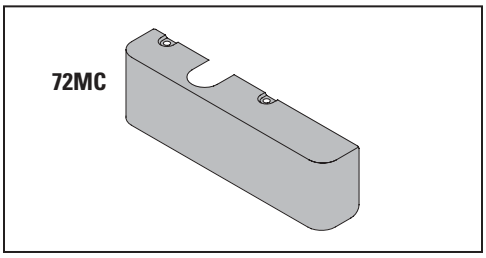

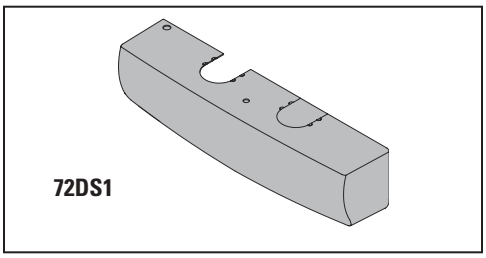

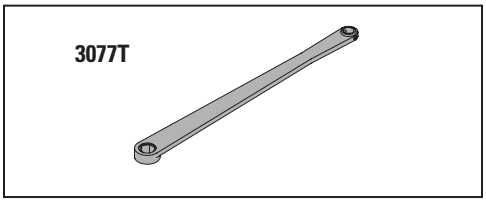

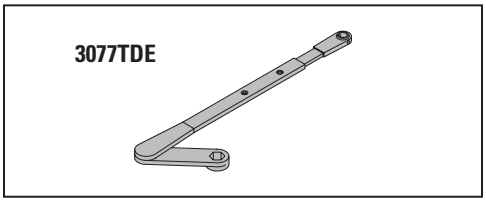

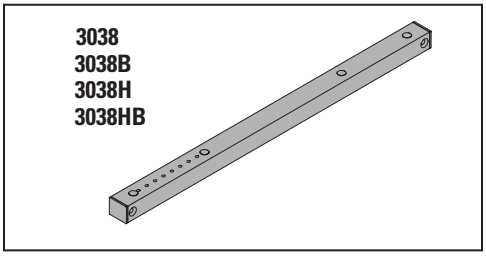

LCN CLOSERS
121 W. RAILROAD AVE.
P.O. BOX 100
PRINCETON, IL, USA 61356-0100

PHONE 800-526-2400
FAX 800-248-1460
www.lcnclosers.com
3/04

INSTALLATION ACCESSORIES

PLATE, 4040T-18TJ/ 4040T-18TJDS1

Required for pull side top jamb installations where head frame is less than 3 7/8" (98 mm). Plate requires minimum 1 3/4" (44 mm) head frame. With Designer Series metal cover, use PLATE, 4040T-18TJDS1.

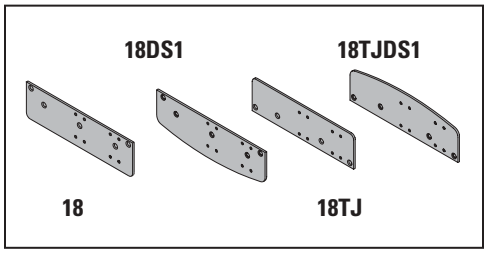

PLATE, 4040T-18/4040T-18DS1

Required for pull side (door mount) installations where top rail is less than 3 3/4" (95 mm).
Plate requires minimum 1 3/4" (44 mm) top rail.
Required for push side (door mount) installations where top rail is less than 5 1/4" (133 mm) measured from the stop.
Plate requires minimum 3 1/2" (89 mm) top rail. With Designer Series metal cover, use PLATE, 4040T-18DS1.

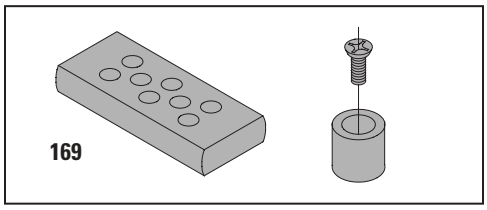

TRACK BUMPER, 4040T-169

Mounts in track to assist backcheck, does not replace auxiliary stop.
Limits maximum opening.
Consists of bumper, bumper post, and mounting screw.

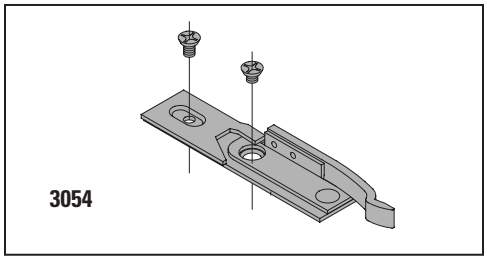

HOLD-OPEN CLIP, 4040T-3054

Mounts in track to provide hold-open function.
Hold-open point controlled by clip location.

TRACK ROLLER, 4040T-3034

Quiet, low friction roller assembly.
Shoulder dimension "X" = 1/8" (3mm).

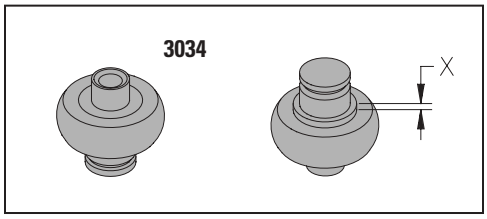

LCN CLOSERS
121 W. RAILROAD AVE.
P.O. BOX 100
PRINCETON, IL, USA 61356-0100

PHONE 800-526-2400
FAX 800-248-1460
www.lcnclosers.com
3/04

TABLE OF SIZES

Non-Sized 4041T cylinder is adjustable from sizes 1 thru 4 and is shipped set to size 3.

→ Indicates recommended range of door width for closer size.

INTERIOR DOOR WIDTH

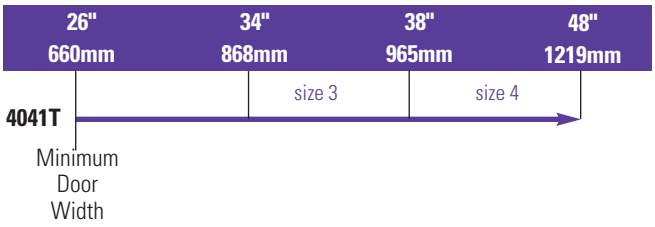

REDUCED OPENING FORCE 4040T CLOSERS

CAUTION ! Any manual door closer, including those certified by BHMA to conform to ANSI Standard A156.4, that is selected, installed and adjusted based on ADA or other reduced opening force requirements may not provide sufficient power to reliably close and latch a door.

Refer to POWER OPERATORS section for information on systems that meet reduced opening force requirements without effecting closing power.

	DOOR WIDTH	36"	42"	48"
♿	8.5* lbs.	N/A	N/A	N/A
	5.0* lbs.	4041T	4041T	4041T

** Maximum opening force*

HOW-TO-ORDER 4040T SERIES CLOSERS

1. SPECIFY FINISH

☐Standard Powder Coat _____
Aluminum, Dark Bronze , Tan, Statuary, Light Bronze, Black, Brass.

Closer will be shipped with:
- STANDARD COVER,
- STANDARD ARM,
- TRACK ROLLER,
- STANDARD TRACK,
- SELF-REAMING and TAPPING SCREWS, unless options listed below are selected.

CLOSER OPTIONS

COVER
☐ Lead Lined (LL)
☐ Metal (specify right or left hand) (MC)
☐ Designer Series Metal (non-handed) (DS1)

FINISH
☐ Custom Powder Coat (RAL) _____
(handed metal cover required)
☐ Plated Finish, US _____
(handed metal cover required)
☐ SRI primer

TRACK
☐ Regular with Bumper (BUMPER)
☐ Hold-Open (HO)
☐ Hold-Open with Bumper (HBUMPER)

SPECIFY SCREW PACK
☐ TB* w/Self-Reaming and Tapping (TBSRT)
☐ Wood & Machine Screw (WMS)
☐ TB*, Wood & Machine Screw (TBWMS)
☐ TORX Machine Screw (TORX)
☐ TB* & TORX Machine Screw (TBTRX)
* Specify door thickness if other than 1 3/4".

INSTALLATION ACCESSORY
☐ Plate, 4040T-18
☐ Plate, 4040T-18DS1
☐ Plate, 4040T-18TJ
☐ Plate, 4040T-18TJDS1

SPECIAL TEMPLATE
☐ ST- _____

LCN CLOSERS
121 W. RAILROAD AVE.
P.O. BOX 100
PRINCETON, IL, USA 61356-0100

PHONE 800-526-2400
FAX 800-248-1460
www.lcnclosers.com
3/04