FEATURES

HINGE (PULL) SIDE MOUNT

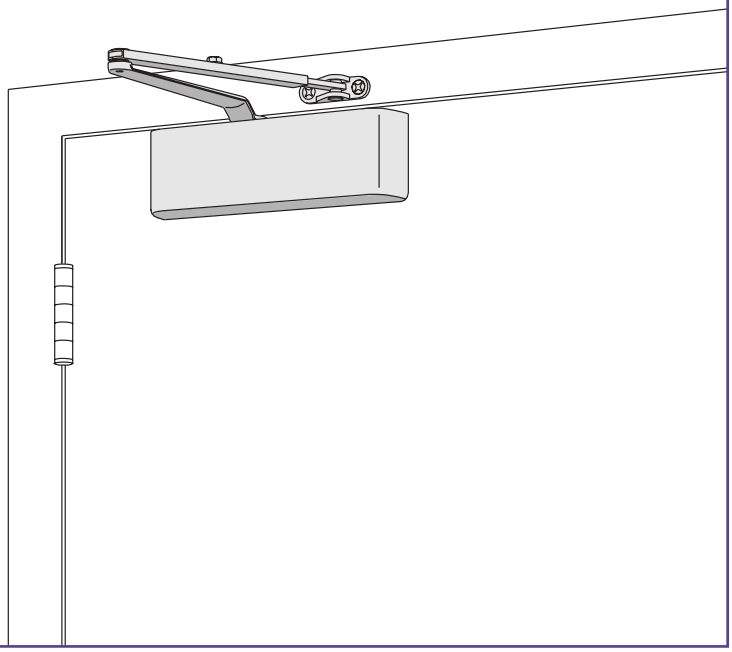

The 4030 offers the best economy in a heavy duty closer designed specifically for interior doors in moderate traffic applications.

- **Cast Iron**
- **Forged Steel Main Arm**
- **Heat Treated Steel Pinion**
- **All Weather Fluid**
- **UL & ULC Listed**

- Standard 4030 series closer shipped with regular arm, standard plastic cover and wood and machine screws. See 4030 Series page 27 for options.
- Choice of sized cylinders for interior doors to 4'0".
- Handed closer mounts hinge (pull) side, specify right or left swinging door.
- Closers to meet ADA requirements. See 4030 Series page 28.
- Standard or optional custom powder coat finish.
- Optional plated finish on cover, arm and fasteners.
- Optional SRI primer for installations in corrosive conditions.
- The 4030 Series is UL and ULC listed for Self-closing doors without hold-open.
- Tested and certified under ANSI Standard A156.4, grade one.

MOUNTING					FINISH		COVER			CYLINDER					**ARM FUNCTION							
HINGE (PULL) SIDE	TOP JAMB (PULL)	TOP JAMB (PUSH)	PARALLEL ARM	STOP FACE	POWDER COAT	PLATED	PLASTIC	METAL	DESIGNER METAL	NON-HANDED	NON-SIZED	ACCESSIBILITY	DELAYED ACTION	AVB***	REGULAR (DOUBLE)	STANDARD (SINGLE)	HOLD-OPEN	FUSIBLE LINK	EDA/HEDA	CUSH/HCUSH	SCUSH/SHCUSH
●	○	○	○	○	●	●	●	●	○	○	○	♿	○	○	180°	○	140°	○	○	○	○

● *Available*
○ *Not available*

♿ *Closer available with less than 5.0 lbs. opening force on 36" door.*
***Maximum opening/hold-open point with standard template.*
**** Advanced Variable Backcheck*

LCN CLOSERS
121 W. RAILROAD AVE.
P.O. BOX 100
PRINCETON, IL, USA 61356-0100

PHONE 800-526-2400
FAX 800-248-1460
www.lcnclosers.com
3/04

LCN 4030 SERIES

HINGE (PULL) SIDE MOUNTING

MAXIMUM OPENING

Can be templated for either
100°,
Ⓐ = 5 1/4" (133 mm)
Ⓑ = 10 3/4" (273 mm)
120°,
Ⓐ = 4 1/4" (108 mm)
Ⓑ = 9 3/4" (248 mm)
or 180°.
Ⓐ = 3 1/4" (83 mm)
Ⓑ = 8 3/4" (222 mm)

Hold-open points up to maximum opening for 100° and 120° templates with hold-open arm.

Maximum opening and hold-open points up to 140° with 180° template and hold-open arm.

Arm clearance above door.
Regular arm requires
Ⓒ = 1 1/16" (27 mm).
Hold-open arm requires
Ⓒ = 1 5/16" (33 mm).

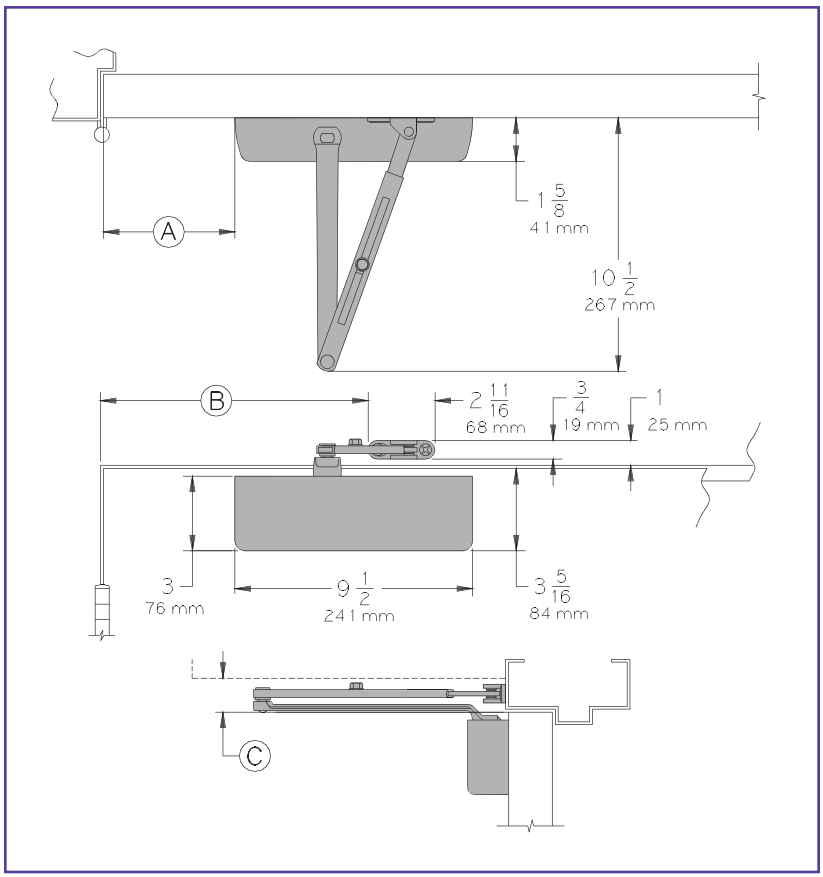

- **Butt Hinges** should not exceed 5" (127 mm) in width.
- **Auxiliary Stop** is recommended at hold-open point or where the door cannot swing 180°.
- **Reveal** should not exceed 3/4" (19 mm) for regular arm or hold-open arm.
- **Top Rail** less than 3 1/4" (83 mm) requires SPECIAL TEMPLATE.
- **Clearance** of 1 5/8" (41 mm) behind door required.
- **Door thickness**, butt size, and trim thickness may effect maximum degree of opening.

Options
- Hold-open arm.
- Metal or lead lined cover.

Special Templates
Customized installation templates or products may be available to solve unusual applications. Contact LCN for assistance.

LCN CLOSERS
121 W. RAILROAD AVE.
P.O. BOX 100
PRINCETON, IL, USA 61356-0100
PHONE 800-526-2400
FAX 800-248-1460
www.lcnclosers.com
3/04

CYLINDERS

CYLINDER, 4030-3071

Standard, handed cast iron cylinder assembly.

For various applications see "Table of Sizes" on 4030 Series page 28.

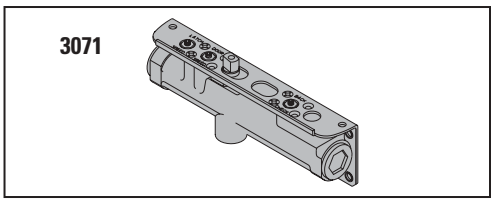

COVERS

COVER, 4030-72

Standard, non-handed plastic cover.

LEAD LINED COVER, 4030-72LL

Optional non-handed cover.

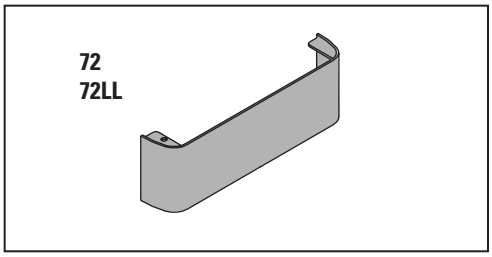

METAL COVER, 4030-72MC

Optional, non-handed cover. Required for plated finishes and custom powder coat finishes.
Installation kit included.

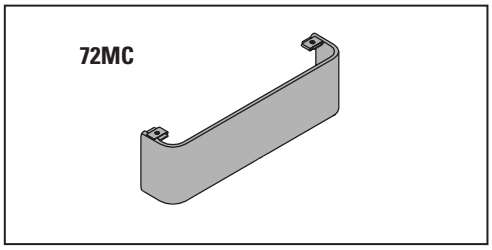

ARMS

REGULAR ARM, 4030-3077

Non-handed arm.

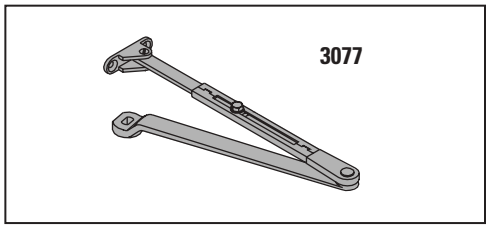

HOLD-OPEN ARM, 4030-3049

Optional, handed arm provides hold open function, adjustable at elbow.

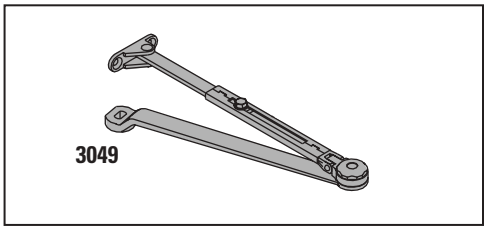

INSTALLATION ACCESSORIES

SOFFIT SHOE, 4030-65

Adapts hinge side shoe to rounded or bull nose trim.

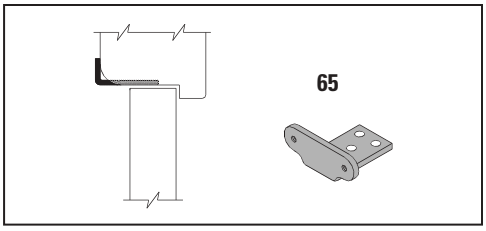

LCN CLOSERS
121 W. RAILROAD AVE.
P.O. BOX 100
PRINCETON, IL, USA 61356-0100

PHONE 800-526-2400
FAX 800-248-1460
www.lcnclosers.com
3/04

LCN 4030 SERIES

TABLE OF SIZES

Select closer based on width of door.
The 4030 cylinder is available in size 1, 2, 3, or 4.
Spring power is not adjustable.
Where severe conditions or potential for abuse exists, use 4010 Series closer.
Note: Closing power of all closers may be increased 15%.

→ Indicates recommended range of door width for closer size.

INTERIOR DOOR WIDTH

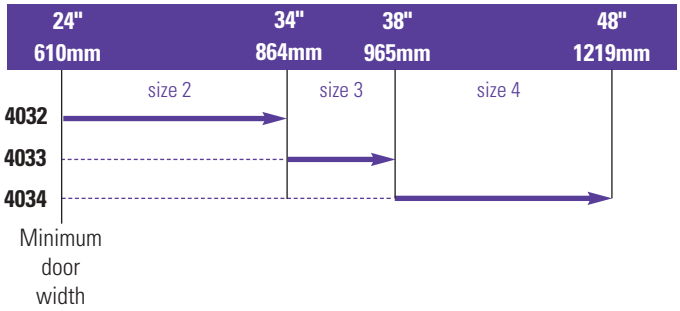

REDUCED OPENING FORCE 4030 CLOSERS

CAUTION ! Any manual door closer, including those certified by BHMA to conform to ANSI Standard A156.4, that is selected, installed and adjusted based on ADA or other reduced opening force requirements may not provide sufficient power to reliably close and latch a door.

Refer to POWER OPERATORS section for information on systems that meet reduced opening force requirements without effecting closing power.

DOOR WIDTH	36"	42"	48"
8.5* lbs.	N/A	N/A	N/A
5.0* lbs.	4031	4032	4032

** Maximum opening force*

HOW-TO-ORDER 4030 SERIES CLOSERS

1. SELECT CYLINDER SIZE

☐ 4031 (ADA)
☐ 4032
☐ 4033
☐ 4034

2. SPECIFY HAND

☐ RH
☐ LH

3. SPECIFY FINISH

☐ Standard Powder Coat _____
Aluminum, Dark Bronze , Tan, Statuary, Light Bronze, Black, Brass.

Closer will be shipped with:
- STANDARD COVER,
- REGULAR ARM,
- WOOD & MACHINE SCREW,
unless options listed below are selected.

CLOSER OPTIONS

COVER

☐ Metal (MC)
☐ Lead Lined (LL)

FINISH

☐ Custom Powder Coat (RAL) _____
(handed metal cover required)
☐ Plated Finish, US _____
(handed metal cover required)
☐ SRI primer

ARM

☐ Hold-Open (H)

SCREW PACK

☐ TB*, Wood & Machine Screw (TBWMS)
☐ TORX Machine Screw (TORX)
☐ TB* & TORX Machine Screw (TBTRX)
* Specify door thickness if other than 1 3/4".

INSTALLATION ACCESSORIES

☐ Soffit Shoe, 4030-65

SPECIAL TEMPLATE

☐ ST- _____

LCN CLOSERS
121 W. RAILROAD AVE.
P.O. BOX 100
PRINCETON, IL, USA 61356-0100
PHONE 800-526-2400
FAX 800-248-1460
www.lcnclosers.com
3/04