FEATURES

CLOSER MOUNTS
***HINGE (PULL) SIDE**
TOP JAMB (PULL SIDE)
STOP FACE (PUSH SIDE)

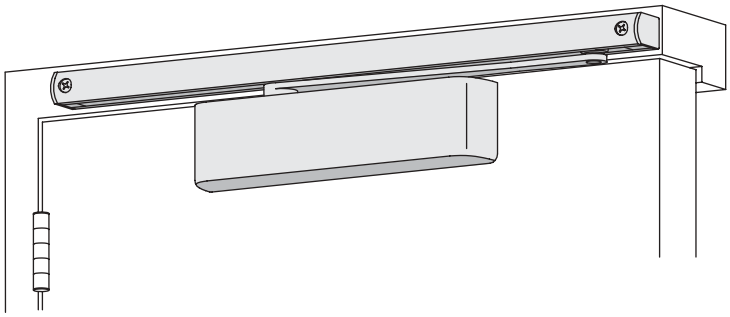

**HINGE (pull) side mount shown*

The 1520T is a single lever (track) arm, surface mounted closer designed for interior use on narrow head frames and top rails. The choice of three mountings and ease of installation offer a versatile solution to door control in moderate traffic applications.

The 1520T Series is UL and ULC listed for self-closing doors without hold-open. Tested and certified under ANSI Standard A156.4, grade one.

- Standard 1520T series closer shipped with a standard arm, metal cover, a standard track and wood and self-tapping machine screw pack. See 1520T Series page 41 for options.
- Non-sized 1521T cylinder for interior doors to 38" (965 mm).
- Closer mounts pull side on door, pull side on frame and push side on door, on either right or left swinging doors.
- Closer meets ADA requirements. See 1520T Series page 42.
- Standard or optional custom powder coat finish.
- Optional plated finish on cover, arm and fasteners.
- Optional SRI primer for installations in corrosive conditions.

MOUNTING					FINISH		COVER			CYLINDER				*ARM FUNCTION						
HINGE (PULL) SIDE	TOP JAMB (PULL)	TOP JAMB (PUSH)	PARALLEL ARM	STOP FACE	POWDER COAT	PLATED	PLASTIC	METAL	DESIGNER SERIES	NON-HANDED	NON-SIZED	ACCESSIBILITY	DELAYED ACTION	REGULAR (DOUBLE)	STANDARD (SINGLE)	HEAVY DUTY	HOLD-OPEN	EDA/HEDA	CUSH/HCUSH	SCUSH/SHCUSH
●	●	○	○	●	●	●	○	●	○	●	●	♿	○	○	180°	○	110°	○	○	○

● *Available*
○ *Not available*
♿ *Closer available with less than 5.0 lbs. opening force on 36" door.*
* *Maximum opening/hold-open point with standard template. Hinge side mount.*

LCN CLOSERS
121 W. RAILROAD AVE.
P.O. BOX 100
PRINCETON, IL, USA 61356-0100

PHONE 800-526-2400
FAX 800-248-1460
www.lcnclosers.com
3/04

LCN 1520T SERIES

MOUNTING DETAILS

HINGE (PULL) SIDE MOUNTING

MAXIMUM OPENING

Can be templated for 180°.

Consult factory if door will be held open at 180°

Hold-open points up to 110° opening with hold-open option.

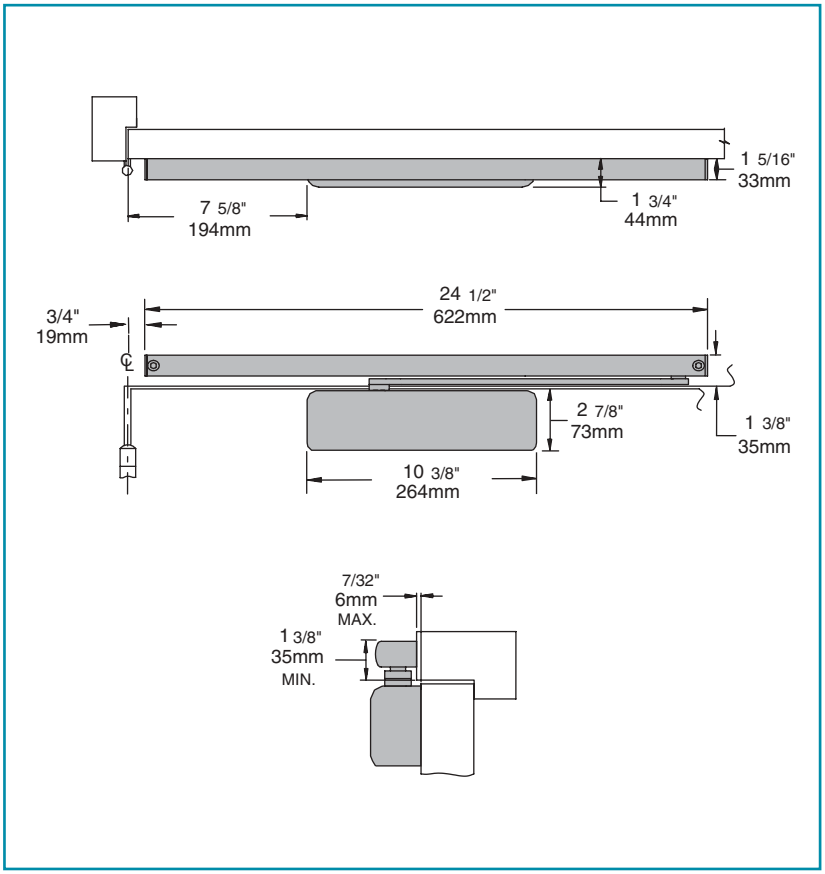

- **Butt Hinges** should not exceed 5" (127 mm) in width.
- **Auxiliary Stop** is recommended at hold-open point or where a door cannot swing 180°.
- **Reveal** should not exceed 7/32" (6 mm).
- **Top Rail** requires 2 7/8" (73 mm) minimum.
- **Clearance** of 1 3/4" (44 mm) behind door required for installation.

Options

- Hold-open track.

LCN CLOSERS
121 W. RAILROAD AVE.
P.O. BOX 100
PRINCETON, IL, USA 61356-0100

PHONE 800-526-2400
FAX 800-248-1460
www.lcnclosers.com

3/04

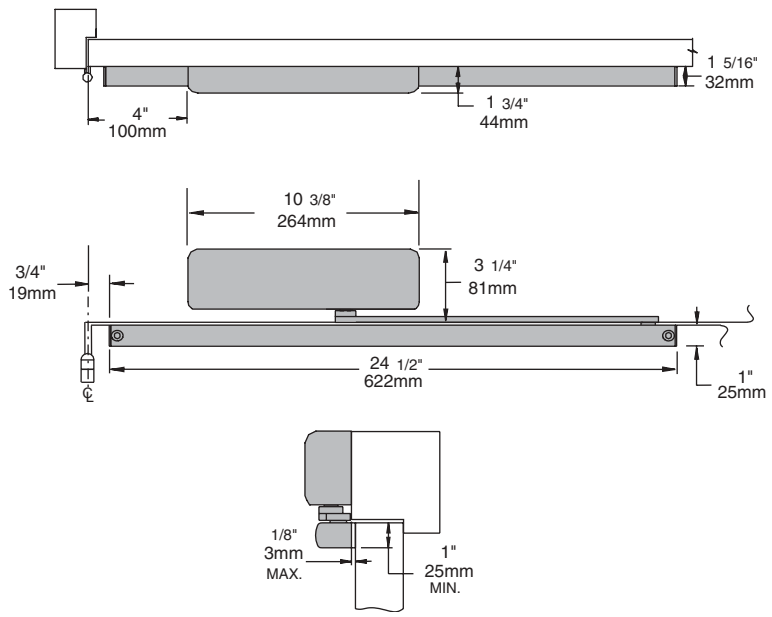

TOP JAMB (PULL SIDE) MOUNTING

MAXIMUM OPENING

Can be templated for 180°.

Consult factory if door will be held open at 180°

Hold-open points up to 110° opening with hold-open option.

- **Butt Hinges** should not exceed 5" (127 mm) in width.
- **Auxiliary Stop** is recommended at hold-open point or where the door cannot swing 180°.
- **Reveal** should not exceed 1/8" (3 mm).
- **Top Rail** requires 1" (25 mm) minimum.
- **Head Frame** requires 2 7/8" (73 mm) minimum.

Options

- Hold-open track.

LCN CLOSERS
121 W. RAILROAD AVE.
P.O. BOX 100
PRINCETON, IL, USA 61356-0100

PHONE 800-526-2400
FAX 800-248-1460
www.lcnclosers.com
3/04

LCN 1520T SERIES

STOP FACE (PUSH SIDE) MOUNTING

MAXIMUM OPENING

Can be templated for 110°.

Hold-open points up to maximum opening with hold-open option.

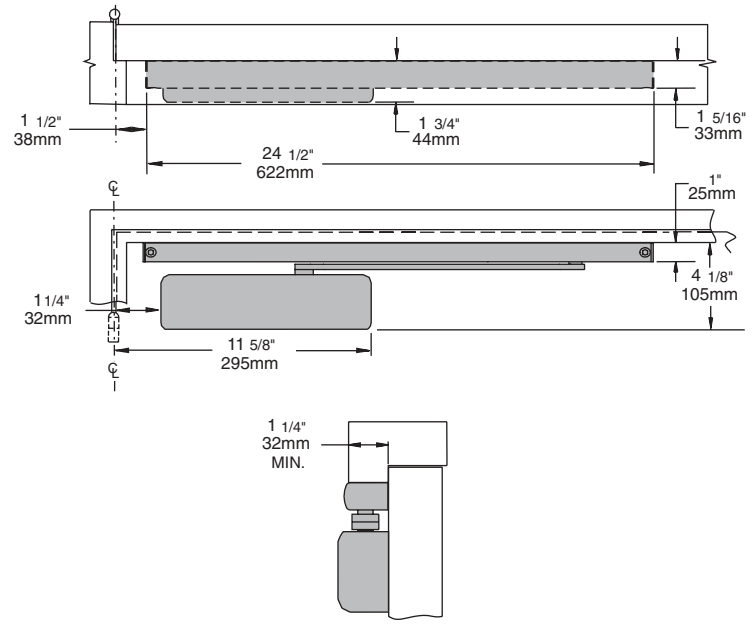

- **Butt Hinges** should not exceed 5" (127 mm) in width.
- **Auxiliary Stop** is recommended at hold-open point or where a door cannot swing 120°.
- **Clearance** projects 1 3/4" (44 mm).
- **Top Rail** requires 4 1/8" (105mm) minimum measured from the stop.
- **Stop Width** minimum 1 1/4" (32 mm).

Options

- Hold-open track.

LCN CLOSERS
121 W. RAILROAD AVE.
P.O. BOX 100
PRINCETON, IL, USA 61356-0100

PHONE 800-526-2400
FAX 800-248-1460
www.lcnclosers.com
3/04

CYLINDERS

CYLINDER, 1520T-3071

Standard, non-handed cast iron cylinder assembly.

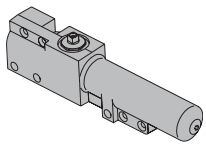

3071

COVERS

COVER, 1520T-72MC

Non-handed metal cover.

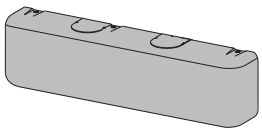

72MC

ARMS

STANDARD ARM, 1520T-3077T

Non-handed single lever arm mounts hinge side, top jamb or stop face. Track roller included with arm.

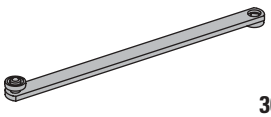

3077T

STANDARD TRACK, 1520T-3038

Standard, non hold-open, non-handed track mounts on either side of the door. Will accept hold-open clip.

HOLD-OPEN TRACK, 1520T-3038H

Optional non-handed hold-open track mounts on either side of the door. Comes with 1520T-3054 Hold-open clip.

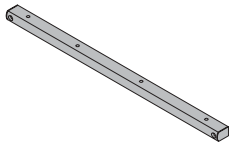

3038
3038H

HOLD-OPEN CLIP, 1520T-3054

Mounts in track to provide hold-open function. Hold-open point controlled by clip location.

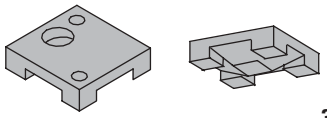

3054

LCN CLOSERS
121 W. RAILROAD AVE.
P.O. BOX 100
PRINCETON, IL, USA 61356-0100

PHONE 800-526-2400
FAX 800-248-1460
www.lcnclosers.com
3/04

LCN 1520T SERIES

TABLE OF SIZES

Non-sized 1521T cylinder is adjustable from sizes 1 to 3 and is shipped set to size 3.

→ Indicates recommended range of door width for closer size.

INTERIOR DOOR WIDTH

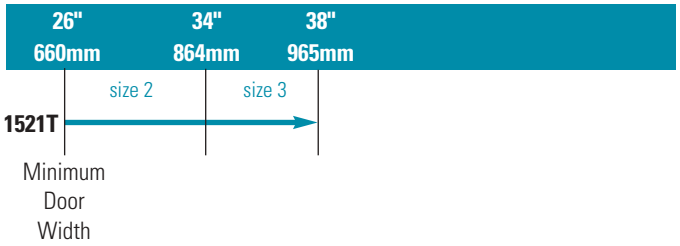

HOW-TO-ORDER 1520T SERIES CLOSERS

1. SELECT FINISH

☐ Standard Powder Coat _____
Aluminum, Dark Bronze , Tan, Statuary, Light Bronze, Black, Brass.

Closer will be shipped with:

- *STANDARD CYLINDER*
- *STANDARD METAL COVER,*
- *STANDARD TRACK*
- *STANDARD ARM*
- *TRACK ROLLER*
- *Wood and Self-tapping Machine screw pack unless options listed below are indicated.*

CLOSER OPTIONS

TRACK

☐ Hold-open (H)

FINISH

☐ Custom Powder Coat (RAL) _____

☐ Plated Finish, US _____

☐ SRI primer

SCREW PACK

☐ TB*, Wood & Machine Screws (TBWMS)

REDUCED OPENING FORCE 1520T CLOSERS

CAUTION ! Any manual door closer, including those certified by BHMA to conform to ANSI Standard A156.4, that is selected, installed and adjusted based on ADA or other reduced opening force requirements may not provide sufficient power to reliably close and latch a door.

Refer to POWER OPERATORS section for information on systems that meet reduced opening force requirements without affecting closing power.

	DOOR WIDTH	36"	42"	48"
♿	8.5* lbs.	N/A	N/A	N/A
	5.0* lbs.	1521T	1521T	1521T

** Maximum opening force*

LCN CLOSERS
121 W. RAILROAD AVE.
P.O. BOX 100
PRINCETON, IL, USA 61356-0100

PHONE 800-526-2400
FAX 800-248-1460
www.lcnclosers.com
3/04