FEATURES

CONCEALED (IN FRAME) MOUNTING

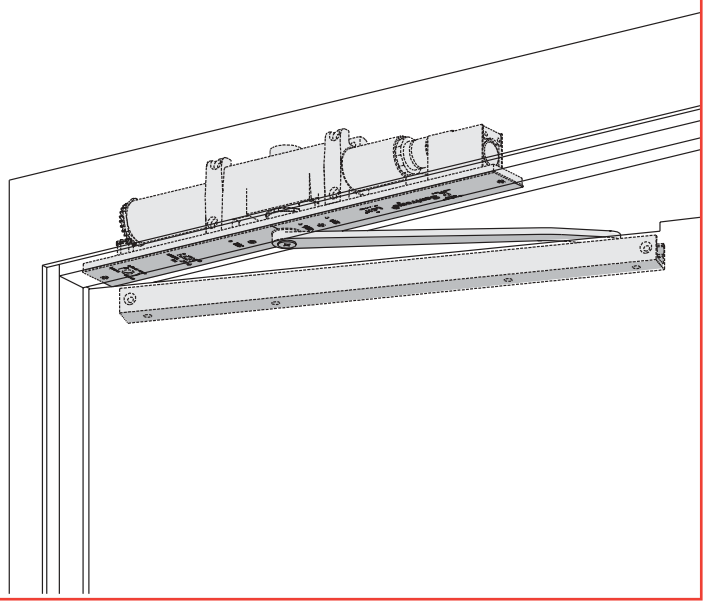

The 2310ME SENTRONIC® is a concealed heavy duty, electrically controlled closer/holder designed to provide infinitely adjustable hold-open for fire and smoke barrier doors. Door is held open until current interruption releases mechanism and the door closes. Single lever (track) arm closer is specifically designed for interior doors. Choice of finishes, cylinder functions, and installation accessories meet virtually all life safety requirements.

The 2310ME Series is UL & ULC listed for smoke barrier or labeled fire doors. Tested and certified under ANSI Standard A156.15. Conforms to life safety code, NFPA 101.

- Standard 2310ME series closer shipped with either 24V or 120V cylinder (please specify), two piece metal finish plate, standard arm, track, and wood and machine screw pack. See 2310ME Series page 19 for options.
- Sized cylinders for interior doors to 4'0".
- Functions as full rack and pinion door closer when hold-open is not engaged or current is interrupted.
- Handed for right or left swinging door.
- Built-in "On/Off" switch controls hold-open function.
- Interfaces with fire alarm systems. Consult factory.
- Standard or optional custom powder coated finish.
- Optional plated finish on arm, fasteners and finish plate.

MOUNTING					FINISH		COVER		CYLINDER				*ARM FUNCTION			
HINGE (PULL) SIDE	TOP JAMB (PUSH)	STOP FACE (PUSH)	CONCEALED (FRAME)	CONCEALED (DOOR)	POWDER COAT	PLATED	PLASTIC	METAL	HANDED	NON-SIZED	SIZED	SINGLE POINT HOLD-OPEN	MULTI-POINT HOLD-OPEN	BYPASS 80/140	STANDARD (SINGLE)	REGULAR (DOUBLE)	SWING FREE	DOUBLE EGRESS
○	○	○	●	○	●	●	○	●	●	○	●	○	●	●	160°	○	○	○

● *Available*
○ *Not available*

** Maximum hold-open with standard template. See individual closer series for degrees of opening and hold-open per installation.*

LCN CLOSERS
121 W. RAILROAD AVE.
P.O. BOX 100
PRINCETON, IL, USA 61356-0100

PHONE 800-526-2400
FAX 800-248-1460
www.lcnclosers.com
3/04

LCN 2310ME SERIES

MOUNTING DETAILS

CONCEALED MOUNTING

For interior smoke barrier and labeled fire doors.

MAXIMUM OPENING

Templating allows 180°.

Infinite hold-open points up to 160°.

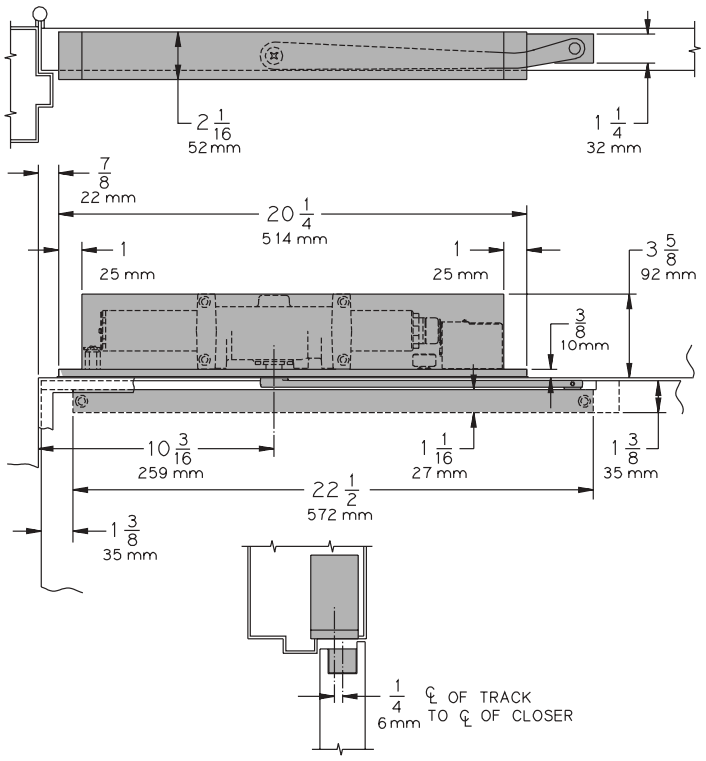

- **Butt Hinges** should not exceed 5" (127 mm) in width.
- **Top Rail** 1 3/8" (35 mm) mortise required.
  5/16" (8 mm) cutout required at top of door, stop face only.
- **Door Thickness** 1 3/4" (44 mm) minimum.
- **Door Width** 2'4" (711 mm) minimum.
- **Hollow Metal Frame** Requires minimum 4" (102 mm) x 4" frame. Consult factory or template for preparation details.
- **Bypass** (suffix "B80" or "B140") eliminates hold-open function up to a specified point of the doors swing.
  B80 cylinder from 0° to 80°.
  B140 cylinder from 0° to 140°.
- **Wiring Diagram**

Options

- Hold-open bypass.
- 24V or 120 volt input, please specify.

Special Templates

Customized installation templates or products may be available to solve unusual applications. Contact LCN for assistance.

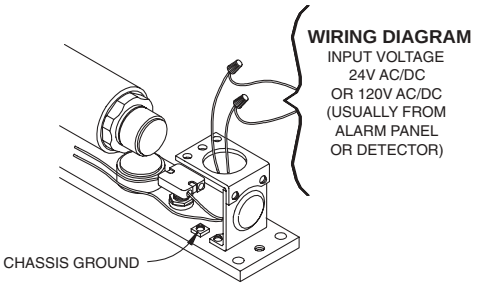

ME (2310) WIRING DIAGRAM

LCN CLOSERS
121 W. RAILROAD AVE.
P.O. BOX 100
PRINCETON, IL, USA 61356-0100

PHONE 800-526-2400
FAX 800-248-1460
www.lcnclosers.com

3/04

CYLINDER

ME CYLINDER, 2310ME-3971

Standard, handed cast iron cylinder assembly. 24V holding solenoid **(24)** or 120V holding solenoid **(120),** please specify. For various applications see "Table of Sizes" on 2310ME Series page 20.

ME CYLINDER, 2310ME-3071

Standard, handed cylinder and mounting plate assembly. "On/Off" switch assembly controls hold-open function. Circuitry accepts either AC or DC input.
24V holding solenoid **(24)** or 120V holding solenoid **(120),** please specify. For various applications see "Table of Sizes" on 2310ME Series page 20.

ARM

STANDARD ARM, 2310ME-3077T

Handed arm.

TRACK

STANDARD TRACK, 2310ME-3038

Standard, non-handed track.

SWITCH

SWITCH, 2310ME-3351

"On/Off" switch assembly provides continuous hold-open function. Available as 24V or 120V, please specify.

INSTALLATION ACCESSORIES

FIRE SHIELD, 2310ME-420

22 gauge steel liner mounts in the track mortise of the door's top rail for 20 minute labeled wood doors with hollow metal frames.

TRANSFORMER, 4040SE-3210

Reduces line voltage from 120V to 24V AC.
Mounted on plate for 4" (102 mm) x 4" x 2 1/8" (54 mm) junction box (by others).

TRACK ROLLER, 2310ME-3034

Quiet, low friction roller assembly.
Shoulder dimension "X" = 1/16" (2 mm).

3971

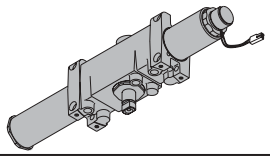

3071

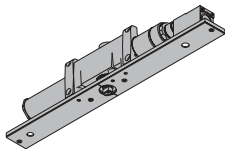

3077T

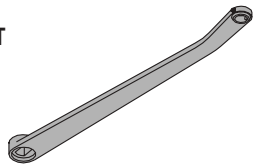

3038

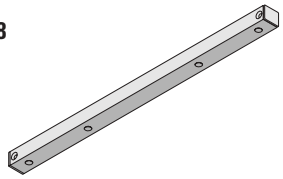

3351

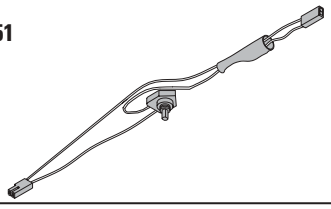

420

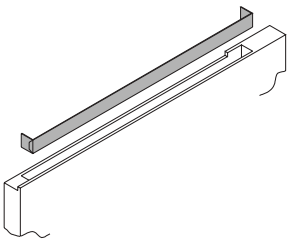

3210

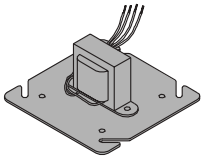

3034

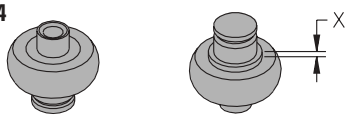

LCN CLOSERS
121 W. RAILROAD AVE.
P.O. BOX 100
PRINCETON, IL, USA 61356-0100

PHONE 800-526-2400
FAX 800-248-1460
www.lcnclosers.com
3/04

LCN 2310ME SERIES

ORDERING INFORMATION

TABLE OF SIZES

Select closer based on width of door.
Sized 2310ME series cylinders available in size 3 or 4.
Closing power of all 2310ME Series closers may be increased 15%.

Indicates recommended range of door width for closer size.

INTERIOR DOOR WIDTH

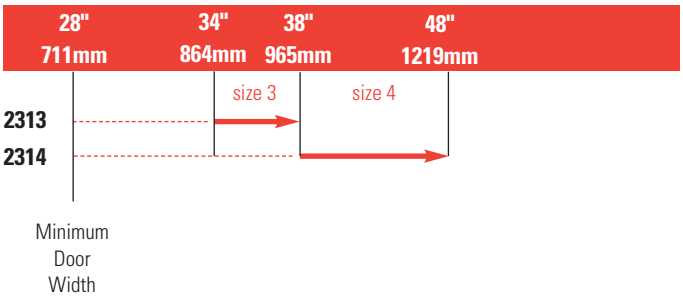

HOW-TO-ORDER 2310ME SERIES CLOSERS

1. SELECT CYLINDER SIZE.

☐ 2313ME
☐ 2314ME

2. SPECIFY HAND.

☐ RH
☐ LH

3. VOLTAGE

☐ 24V AC/DC
☐ 120V AC/DC

4. SPECIFY FINISH.

☐ Standard Powder Coat _____
Aluminum, Dark Bronze , Tan, Statuary, Light Bronze, Black, Brass.

Closer will be shipped with:
- FINISH PLATES,
- STANDARD ARM,
- STANDARD TRACK,
- TRACK ROLLER,
- WOOD & MACHINE SCREW PACK,
unless options listed below are selected.

CLOSER OPTIONS

CYLINDER FUNCTION

☐ Bypass 80° (B80)
☐ Bypass 140° (B140)

FINISH

☐ Custom Powder Coat (RAL) _____
☐ Plated Finish, US _____

SCREW PACK

☐ TORX Machine Screw (TORX)

INSTALLATION ACCESSORIES

☐ Fire Shield, 2310ME-420
☐ Transformer, 4040SE-3210

SPECIAL TEMPLATE

☐ ST-_____

LCN CLOSERS
121 W. RAILROAD AVE.
P.O. BOX 100
PRINCETON, IL, USA 61356-0100
PHONE 800-526-2400
FAX 800-248-1460
www.lcnclosers.com
3/04