FEATURES

CONCEALED (IN 1 3/4" TUBE) MOUNTING

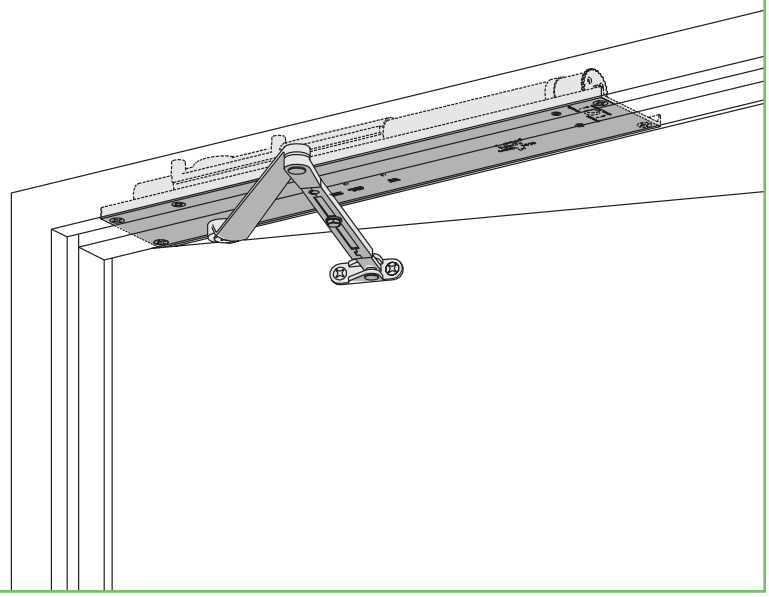

The concealed 5030 Series PACER® is a heavy duty closer designed to fit in a narrow, minimum 1 3/4" aluminum transom. The double lever arm provides superior door control and the choice of finishes and arm functions meet virtually all architectural requirements.

The 5030 Series is UL listed with regular arms for self-closing doors. Tested and certified under ANSI Standard A156.4.

- Standard 5030 series closer shipped with regular arm, mounting/finish plate and wood and machine screw pack. See 5030 Series page 31 for options.
- Sized cylinders for interior doors to 5'0" and exterior doors to 4'0".
- Handed for right or left swinging doors.
- Aluminum frame requires minimum 1 3/4" (44 mm) x 4 1/2" (114 mm) tube.
- Closers to meet ADA requirements. See 5030 Series page 32.
- Standard or optional custom powder coat finish.
- Optional plated finish on arm, fasteners and mounting/finish plate.

CONCEALED MOUNTING			FINISH		CYLINDER				ARM		*ARM FUNCTION		
IN FRAME	IN 1 3/4" TUBE	IN DOOR	POWDER COAT	PLATED	HANDED	SIZED	ACCESSIBILITY	DELAYED ACTION	CONCEALED	EXPOSED	STANDARD (SINGLE)	REGULAR (DOUBLE)	HOLD-OPEN
○	●	○	●	●	●	●	♿	○	○	●	○	180°	180°

● *Available*
○ *Not available*

♿ *Closer available with less than 5.0 lbs. opening force on 36" door.*
**Maximum opening/hold-open point with standard template. See individual closer series for degrees of opening per installation.*

LCN CLOSERS
121 W. RAILROAD AVE.
P.O. BOX 100
PRINCETON, IL, USA 61356-0100

PHONE 800-526-2400
FAX 800-248-1460
www.lcnclosers.com
3/04

LCN 5030 SERIES

MOUNTING DETAILS

CONCEALED MOUNTING

For interior or exterior doors.
Single acting cylinder in head frame.
Exposed arm on push side of door.

MAXIMUM OPENING

Butt hung doors can be templated for 100°,

Ⓐ = 5 13/16" (148 mm)
Ⓑ = 11 13/16" (300 mm)

or 180°,

Ⓐ = 2 1/16" (52 mm)
Ⓑ = 8 1/16" (205 mm)
trim permitting.

Hold-open points up to maximum opening with hold-open arms.

Center pivot mounting restricts opening to 120°.

Offset pivot mounting allows up to 115°, trim permitting.

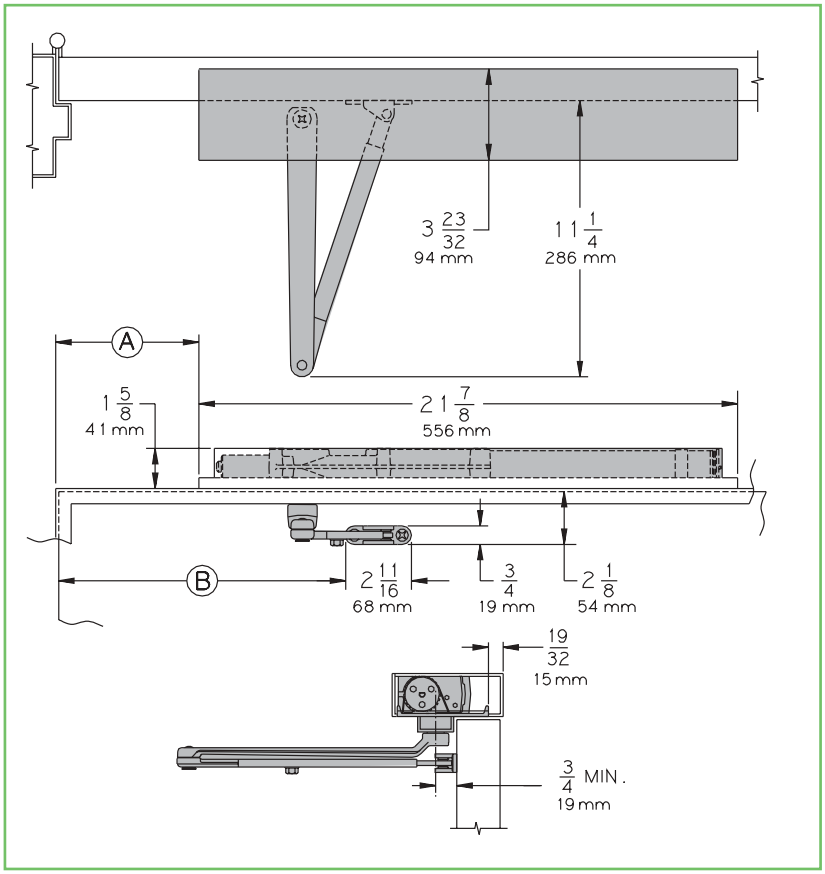

- **Butt Hinges** should not exceed 6" (152 mm) in width.
- **Auxiliary Stop** is recommended at hold-open point or where the door cannot swing 180°.
- **Wood Frame** installation simplified by WOOD MOUNTING CLIP SET 5030-416 for center pivoted or 5030-417 for offset pivoted and butt hung installations. Consult factory for preparation details.
- **Top Rail** minimum 2 1/8" (54 mm) required.
- **Door Thickness** maximum 1 3/4" (44 mm), for doors thicker than 1 3/4" consult factory.

Options

- Hold-open, H180 hold-open.

Special Templates

Customized installation templates or products may be available to solve unusual applications. Contact LCN for assistance.

LCN CLOSERS
121 W. RAILROAD AVE.
P.O. BOX 100
PRINCETON, IL, USA 61356-0100

PHONE 800-526-2400
FAX 800-248-1460
www.lcnclosers.com

3/04

CYLINDERS

CYLINDER, 5030-3071

Standard, handed, cast iron cylinder assembly with mounting plate. For various applications see "Table of Sizes" on 5030 Series page 32.

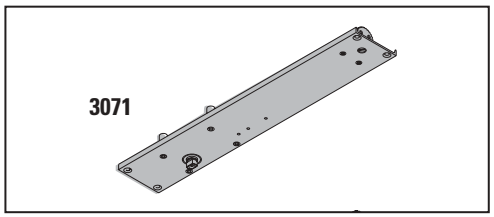

ARMS

REGULAR ARM, 5030-3077

Non-handed arm.

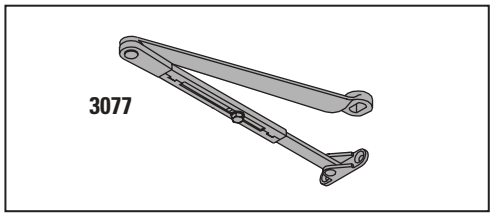

HOLD-OPEN ARM, 5030-3049

Optional, handed arm provides hold-open function for 100° template, adjustable at elbow.

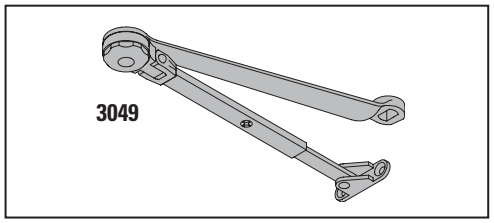

HOLD-OPEN H180 ARM, 5030-3049H180

Optional, handed arm provides hold-open function for 180° template, adjustable at shoe.

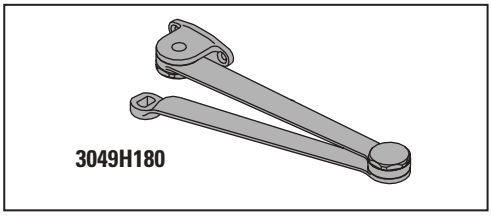

INSTALLATION ACCESSORIES

WOOD MOUNTING CLIP SET, 5030-416

Simplifies mounting center pivoted 5030 closer in wood frame. Includes latch stile clip, hinge stile clip, and cover. For use with Ives Series center pivots. Consult factory for special template.

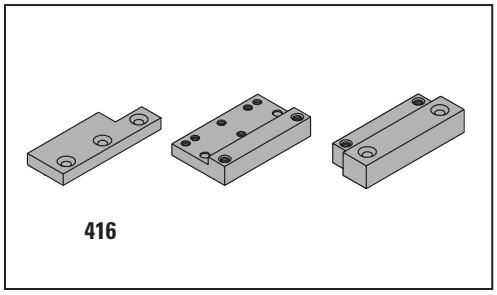

WOOD MOUNTING CLIP SET, 5030-417

Simplifies mounting offset pivoted or butt hung 5030 closer in wood frame. Includes two clips. For use with offset pivots.

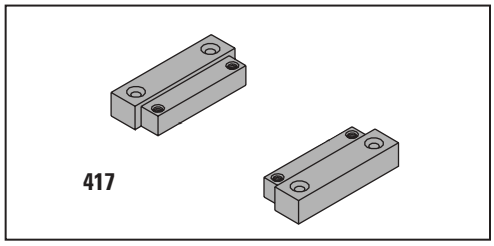

LCN CLOSERS
121 W. RAILROAD AVE.
P.O. BOX 100
PRINCETON, IL, USA 61356-0100

PHONE 800-526-2400
FAX 800-248-1460
www.lcnclosers.com
3/04

LCN 5030 SERIES

MOUNTING DETAILS

TABLE OF SIZES

Select closer based on width of door.
5030 Series cylinders available in size 1, 2, 3, 4, 5, or 6.
Closing power of all 5030 Series closers may be increased 50%.
Specify next higher size closer where strong drafts exist.

→ Indicates recommended range of door width for closer size.
Note: Minimum door width 28" (711 mm).

EXTERIOR (and VESTIBULE) DOOR WIDTH

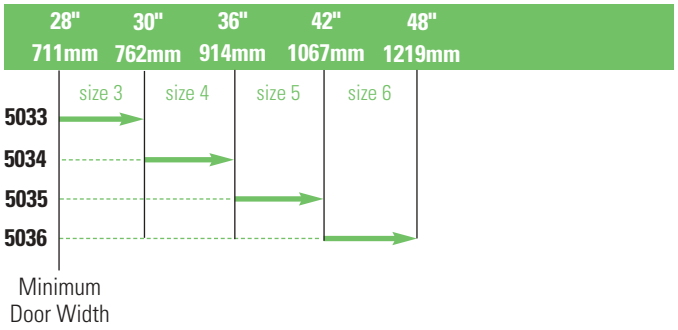

INTERIOR DOOR WIDTH

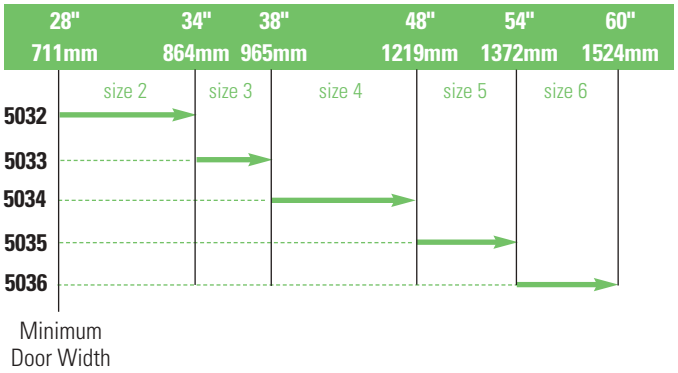

REDUCED OPENING FORCE 5030 CLOSERS

CAUTION ! Any manual door closer, including those certified by BHMA to conform to ANSI Standard A156.4, that is selected, installed and adjusted based on ADA or other reduced opening force requirements may not provide sufficient power to reliably close and latch a door.

Refer to POWER OPERATORS section for information on systems that meet reduced opening force requirements without affecting closing power.

	DOOR WIDTH	36"	42"	48"
♿	8.5* lbs.	5032	5033	5033
	5.0* lbs.	5031	5031	5032

** Maximum opening force*

HOW-TO-ORDER 5030 SERIES CLOSERS

1. SELECT CYLINDER SIZE

☐ 5031 (ADA)
☐ 5032
☐ 5033
☐ 5034
☐ 5035
☐ 5036

2. SPECIFY HAND

☐ RH
☐ LH

3. SPECIFY FINISH

☐ Standard Powder Coat _____
Aluminum, Dark Bronze , Tan, Statuary, Light Bronze, Black, Brass.

Closer will be shipped with:
- REGULAR ARM,
- WOOD and MACHINE SCREW PACK, unless options listed below are selected.

CLOSER OPTIONS

ARM

☐ Hold-Open (H)
☐ H180 Hold-Open (H180)

FINISHES

☐ Custom Powder Coat (RAL) _____
☐ Plated Finish, US _____

SCREW PACK

☐ TORX Machine Screw (TORX)

INSTALLATION ACCESSORIES

☐ Wood Clip Set, 5030-416
☐ Wood Clip Set, 5030-417

SPECIAL TEMPLATE

☐ ST- _____

LCN CLOSERS
121 W. RAILROAD AVE.
P.O. BOX 100
PRINCETON, IL, USA 61356-0100

PHONE 800-526-2400
FAX 800-248-1460
www.lcnclosers.com
3/04