FEATURES

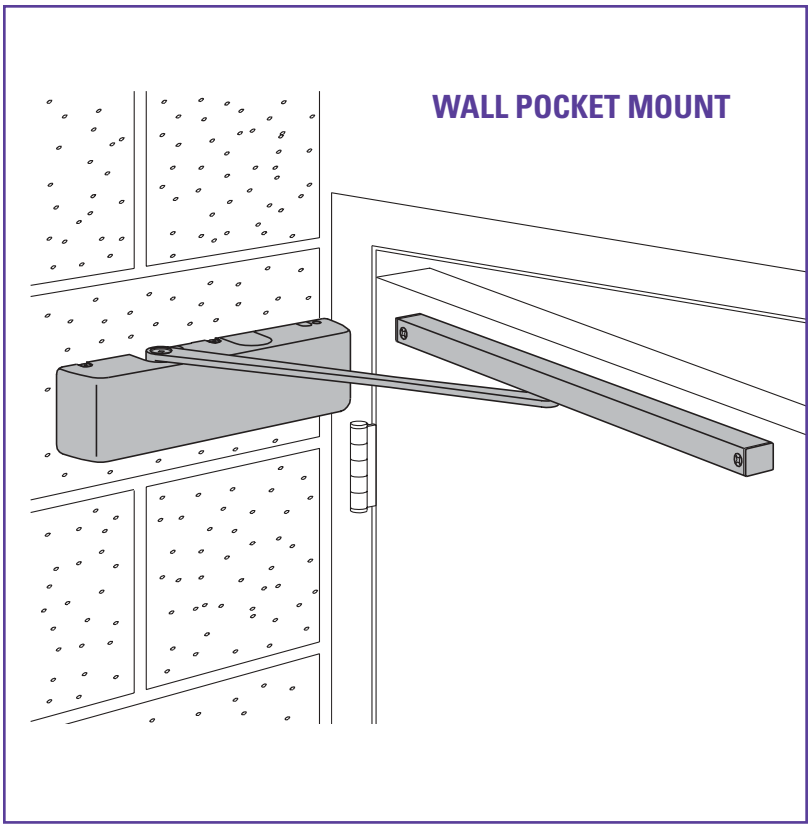

The 4000T is a heavy duty closer to reliably control fire and smoke barrier doors with maximum swing of 90°. Designed for use with an SEM 7850 wall magnet.

- **Cast Iron**
- **Forged Steel Arm**
- **Double Heat Treated Steel Pinion**
- **All Weather Fluid**
- **UL & ULC Listed**

- 4000T series closer shipped with standard arm, standard track, track roller, standard plastic cover, and wood and machine screw pack. See 4000T Series page 63 for options.
- Sized cylinders for interior fire/smoke barrier doors to 4'0".
- Closer mounts in a wall pocket, hinge side, on either right or left hand door.
- Standard or optional custom powder coat finish on cover, arm and fasteners.
- Optional plated finish on cover, arm and fasteners.
- Optional SRI primer for installations in corrosive conditions.
- The 4000T Series is UL and ULC listed with a standard arm for self-closing doors.
- Tested and certified under ANSI Standard A156.4, grade one.

MOUNTING					FINISH		COVER			CYLINDER					**ARM FUNCTION						
HINGE(PULL)SIDE	TOP JAMB (PULL)	TOP JAMB (PUSH)	PARALLEL ARM	STOP FACE	POWDER COAT	PLATED	PLASTIC	METAL	DESIGNER METAL	NON-HANDED	NON-SIZED	ACCESSIBILITY	DELAYED ACTION	AVB***	REGULAR(DOUBLE)	STANDARD (SINGLE)	HOLD-OPEN	FUSIBLE LINK	EDA/HEDA	CUSH/HCUSH	SCUSH/SHCUSH
●	○	○	○	○	●	●	●	●	○	●	○	○	○	○	○	90°	○	○	○	○	○

● *Available*
○ *Not available*

***Maximum opening/hold-open point with standard template.*
**** Advanced Variable Backcheck*

LCN CLOSERS
121 W. RAILROAD AVE.
P.O. BOX 100
PRINCETON, IL, USA 61356-0100

PHONE 800-526-2400
FAX 800-248-1460
www.lcnclosers.com
3/04

WALL POCKET MOUNTING

Cylinder mounts on wall.
Track mounts on hinge side of door.

MAXIMUM OPENING

Templating allows 90° only.
Hold-open point 90° with magnet.

Dimension 1 is the distance from the centerline of the closer shaft to the centerline of the hinge or pivot.
For pocket pivot or total door hinge, 9 1/2" (241 mm).
For butt hinge 8" (203 mm).
For center pivot, 10" (254 mm).

Dimension 2 is the distance from the centerline of the pivot or hinge to the cylinder mounting surface.
For pocket pivot , 4 1/2" (114 mm).
For total door hinge 3 7/8" (98mm)
For butt hinge 2 7/8" (73 mm).
For center pivot, 4 1/2" (114 mm).

Dimension 3 is the distance from the centerline of the pivot or hinge to end of the track.
For pocket pivot or total door hinge, 3 7/8" (98mm).
For butt hinge, 2 3/8" (60mm).
For center pivot, 4 5/8" (117mm).

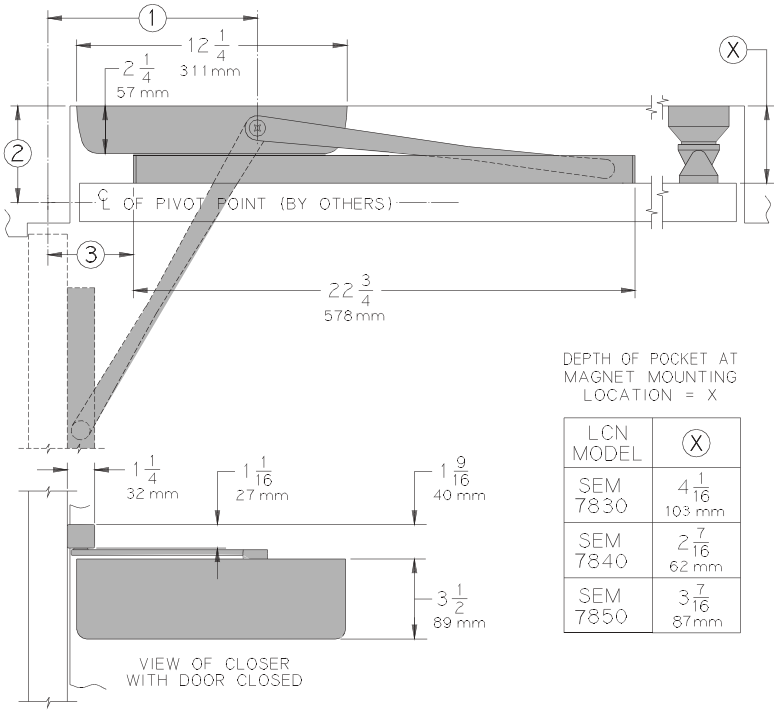

DEPTH OF POCKET AT MAGNET MOUNTING LOCATION = X

LCN MODEL	X
SEM 7830	4 1/16 103 mm
SEM 7840	2 7/16 62 mm
SEM 7850	3 7/16 87 mm

- **Butt Hinges, Pocket Pivot, Total Door Hinge** or **Center Pivot** are door mounting options.
- **Butt Hinges** should not exceed 5" (127 mm).
- **Pocket Depth,** See above table for distance required between door and closer mounting location. This dimension is measured from the cylinder mounting surface to the pull side face of the door at 90°.
- **Wall Magnet SEM 7850** is recommended. Use of other magnets may require special construction to alter the depth of the pocket at the magnet location. See Fire Life Safety Section.

Options

- Metal cover.

Special Templates

Customized installation templates or products may be available to solve unusual applications.
Contact LCN for assistance.

LCN CLOSERS
121 W. RAILROAD AVE.
P.O. BOX 100
PRINCETON, IL, USA 61356-0100

PHONE 800-526-2400
FAX 800-248-1460
www.lcnclosers.com
3/04

CYLINDERS

CYLINDER, 4000T-3071

Standard, non-handed cast iron cylinder assembly.

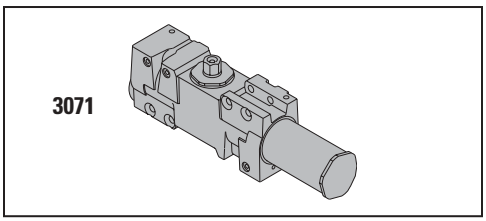

COVERS

COVER, 4000T-72

Standard, non-handed plastic cover.

LEAD LINED COVER, 4000T-72LL

Standard, non-handed cover.

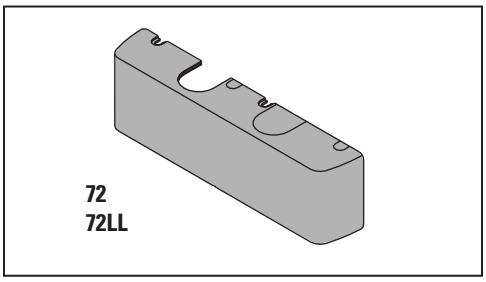

METAL COVER, 4000T-72MC

Optional, handed cover. Required for plated and custom powder coat finishes.

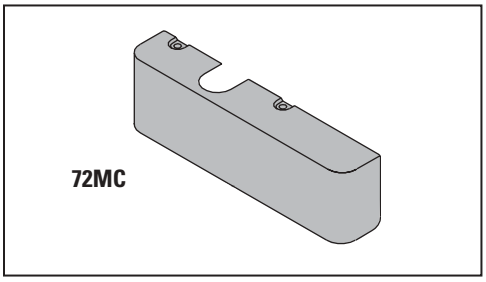

ARM

STANDARD ARM, 4000T-3077T

Non-handed arm.

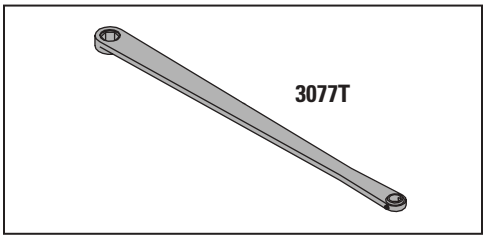

TRACK

STANDARD TRACK, 4000T-3038

Standard, non hold-open, non-handed track.
Will not accept hold-open clip or bumper assembly.

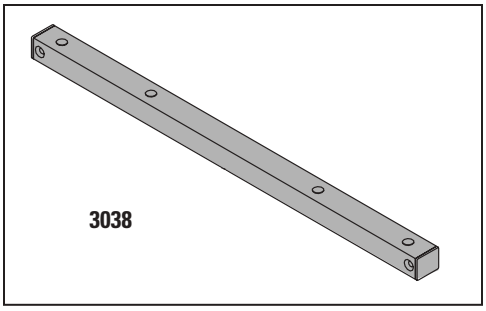

TRACK ROLLER, 4000T-3034

Quiet, low friction roller assembly.
Shoulder Dimension "X"= 1/8" (3 mm).

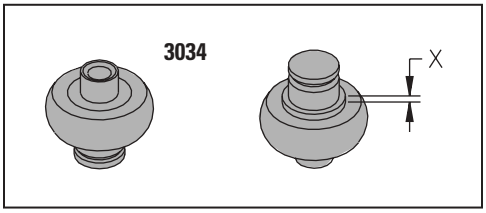

LCN CLOSERS
121 W. RAILROAD AVE.
P.O. BOX 100
PRINCETON, IL, USA 61356-0100

PHONE 800-526-2400
FAX 800-248-1460
www.lcnclosers.com
3/04

LCN 4000T SERIES

TABLE OF SIZES

Select closer based on width of door.
4000T Series cylinders available in size 3 or 4.
Closing power of 4000T Series closers is not adjustable.
→ Indicates recommended range of door width for closer size.

INTERIOR DOOR WIDTH

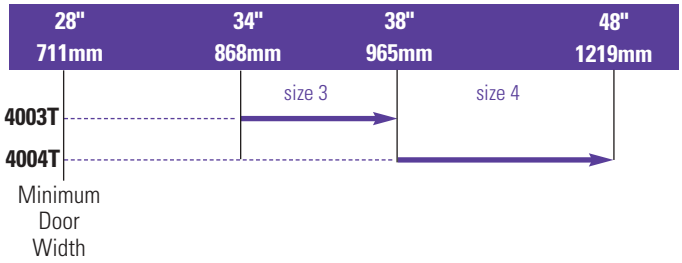

HOW-TO-ORDER 4000T SERIES CLOSERS

1. SELECT CYLINDER SIZE

☐ 4003T
☐ 4004T

2. SELECT FINISH

☐ Standard Powder Coat _____
Aluminum, Dark Bronze , Tan, Statuary, Light Bronze, Black, Brass.

Closer will be shipped with:
- STANDARD COVER,
- STANDARD ARM,
- TRACK ROLLER,
- STANDARD TRACK,
- WOOD and MACHINE SCREW PACK, unless options below are selected.

CLOSER OPTIONS

COVER

☐ Lead Lined (LL)
☐ Metal (MC)

FINISH

☐ Custom Powder Coat (RAL)_____
(handed metal cover required)
☐ Plated Finish, US _____
(handed metal cover required)
☐ SRI primer

SCREW PACK

☐ TB*, Wood & Machine Screw (TBWMS)
☐ TORX Machine Screw (TORX)
☐ TB* & TORX Machine Screw (TBTRX)
* Specify door thickness if other than 1 3/4".

SPECIAL TEMPLATE

☐ ST- _____

LCN CLOSERS
121 W. RAILROAD AVE.
P.O. BOX 100
PRINCETON, IL, USA 61356-0100
PHONE 800-526-2400
FAX 800-248-1460
www.lcnclosers.com
3/04