LCN 1260 SERIES

FEATURES

New

CLOSER MOUNTS
***HINGE (PULL) SIDE**
TOP JAMB (PUSH SIDE)
PARALLEL ARM (PUSH SIDE)

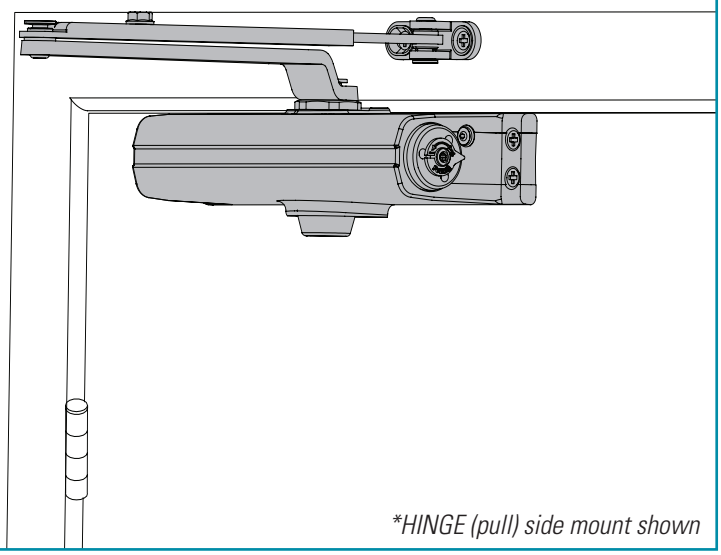

**HINGE (pull) side mount shown*

The LCN 1260 Series combines the best features from the previous 1070 and 1370 into a single versatile and economical cast iron closer, with dual mounting capability. The 1260 is adjustable spring sizes 1-5 and mounts to the most common commercial footprint. The 1260 also features a complete line of regular and extra duty arms, LCN's peel-n-stick installation templates, a convenient spring adjust pointer, and an optional Quick Fix™ bracket kit.

UL and cUL listed for self-closing doors without hold-open. Tested and certified under ANSI Standard A156.4, grade one.

- Standard 1260 series closer shipped with regular arm, a shaft cover, and self reaming and tapping screws. See 1260 Series Pages 8-9 for options.
- Non-sized (1-5) cylinder is adjustable for interior doors to 4'6" and exterior doors to 3'6".
- Closer mounts hinge side, top jamb and parallel arm on either right or left swinging doors.
- Mounts to most common commercial footprint (3/4" x 9 1/16").
- Closer meets ADA requirements. See 1260 Series page 10.
- Optional Quick Fix™ bracket kit.
- Standard or optional custom powder coat finish.
- Optional SRI primer for installations in corrosive conditions.
- Optional Slim Line cover.

MOUNTING					FINISH		COVER			CYLINDER				*ARM FUNCTION						
HINGE (PULL) SIDE	TOP JAMB (PULL)	TOP JAMB (PUSH)	PARALLEL ARM	STOP FACE	POWDER COAT	PLATED	PLASTIC	METAL	DESIGNER SERIES	NON-HANDED	NON-SIZED	ACCESSIBILITY	DELAYED ACTION	REGULAR (DOUBLE)	STANDARD (SINGLE)	HEAVY DUTY	HOLD-OPEN	EDA/HEDA	CUSH/HCUSH	SCUSH/SHCUSH
●	●	○	●	○	●	○	●	○	●	●	●	♿	●	180°	○	○	180°	120°	110°	110°

● *Available*
○ *Not available*
♿ *Closer available with less than 5.0 lbs. opening force on 36" door.*
* *Maximum opening/hold-open point with standard template.*

LCN CLOSERS
121 W. RAILROAD AVE.
P.O. BOX 100
PRINCETON, IL, USA 61356-0100

PHONE 800-526-2400
FAX 800-248-1460
www.lcn.ingersollrand.com
9/07

LCN 1260 SERIES

MOUNTING DETAILS

HINGE (PULL) SIDE MOUNTING

MAXIMUM OPENING

To 100°
- Ⓐ= 6 9/16" (167 mm)
- Ⓑ= 12 7/16" (316 mm)

or 101° to 120°
- Ⓐ = 5 9/16" (141 mm)
- Ⓑ = 11 7/16" (291 mm)

or *121° to180°
- Ⓐ = 3 1/16" (78 mm)
- Ⓑ = 8 15/16" (227 mm)

Hold-open points up to maximum opening with hold-open arm.

**Frame and trim permitting.*

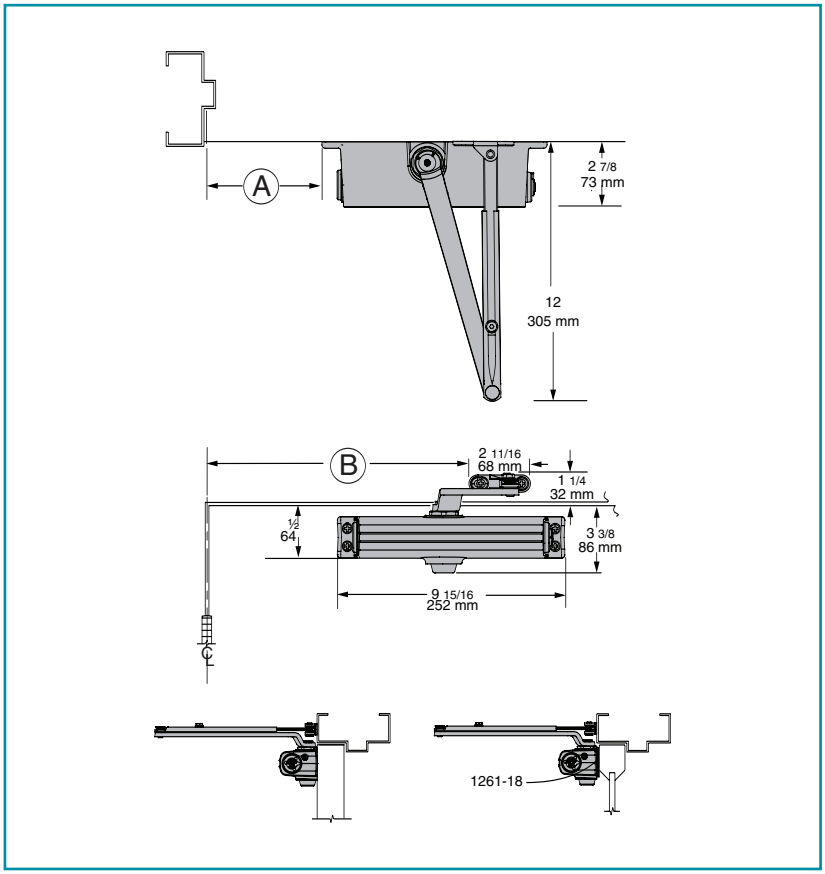

- **Butt Hinges** should not exceed 5" (127 mm) in width.
- **Auxiliary Stop** is recommended at hold-open point or where a door cannot swing 180°.
- **Reveal** should not exceed 3/4" (19 mm) for regular arm or 1/2" (13 mm) for hold-open arm.
- **Top Rail** less than 2 1/2" (64 mm) requires PLATE, 1260-18.
- **Clearance** of 2 7/8" (73 mm) behind door required for installation.
- **Delayed Action** Add suffix "DEL" to selected cylinder (eg. 1260 DEL). Delays closing from 100° to 54°, 120° to 57° or 180° to 66° depending on templating. Delay time adjustable up to approximately 1 minute.
- **Bull Nose Trim** requires SOFFIT SHOE, 1260-65.

Options
- Delayed action cylinder.
- Hold-open arm.
- Slim Line cover. (C)

Special Templates

Customized installation templates or products may be available to solve unusual applications. Contact LCN for assistance.

LCN CLOSERS
121 W. RAILROAD AVE.
P.O. BOX 100
PRINCETON, IL, USA 61356-0100

PHONE 800-526-2400
FAX 800-248-1460
www.lcn.ingersollrand.com

9/07

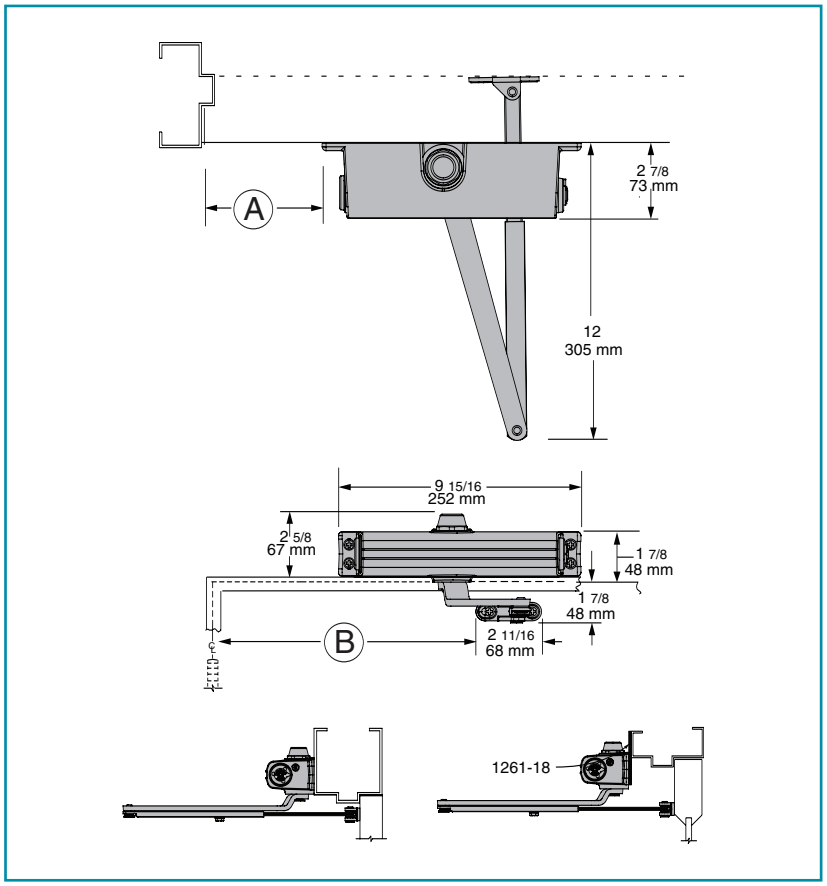

TOP JAMB (PUSH SIDE) MOUNTING

MAXIMUM OPENING

To 100°

Ⓐ= 7 1/16" (179 mm)

Ⓑ= 12 15/16" (329 mm)

or 101° to 120°

Ⓐ = 5 9/16" (141 mm)

Ⓑ = 11 7/16" (291 mm)

or *121° to 180°

Ⓐ = 3 1/16" (78 mm)

Ⓑ = 8 15/16" (227 mm)

Hold-open points up to maximum opening with hold-open arm.

**Frame and trim permitting.*

- **Butt Hinges** should not exceed 5" (127 mm) in width.
- **Auxiliary Stop** is recommended at hold-open point or where a door cannot swing 180°.
- **Reveal**

Arm Type	Maximum Reveal	Opening
Regular Arm	3 1/2"	Up to 120°
Regular Arm	2 1/4"	121° to 180°
Long Arm	7 1/2"	Up to 120°
Long Arm	3 1/2"	121° to 180°
Hold-Open Arm	2"	Up to 120°
Hold-Open Arm	2 1/4"	121° to 180°
Long Hold-Open Arm	4 1/2"	Up to 120°
Long Hold-Open Arm	4 1/2"	121° to 160°

- **Top Rail** requires 1 3/4" (44 mm) minimum.
  2 1/2" (64 mm) minimum with closer on PLATE, 1260-18.
- **Head Frame** less than 1 3/4" (44 mm) requires PLATE, 1260-18. For flush ceiling condition with 2" (51 mm) headframe, use PLATE, 1260-18. (Plate requires 1 3/8" (35 mm) minimum.)
- **Delayed Action** Add suffix "DEL" to selected cylinder (eg. 1260 DEL). Delays closing from 100° to 63°, 120° to 70° or 180° to 85° depending on templating. Delay time adjustable up to approximately 1 minute.

Options

- Delayed action cylinder.
- Long arm, hold-open arm, long hold-open arm.
- Slim Line cover (C).

Special Templates

Customized installation templates or products may be available to solve unusual applications.
Contact LCN for assistance.

LCN CLOSERS
121 W. RAILROAD AVE.
P.O. BOX 100
PRINCETON, IL, USA 61356-0100

PHONE 800-526-2400
FAX 800-248-1460
www.lcn.ingersollrand.com
9/07

LCN 1260 SERIES

MOUNTING DETAILS

PARALLEL ARM (PUSH SIDE) MOUNTING

Optional mounting requires PA SHOE, 1260-62PA for REGULAR or HOLD-OPEN arms. Add prefix "P" to closer description (e.g. P1260). P1260 closer includes 1260-201 FIFTH HOLE SPACER to support PA SHOE.

MAXIMUM OPENING

Regular or hold-open arm can be templated

to 100°

Ⓐ= 7 3/16" (183 mm)

Ⓑ= 8 5/8" (219 mm)

or 101° to 130°

Ⓐ = 5 11/16" (144 mm)

Ⓑ = 7 1/8" (181 mm)

or *131° to 180°

Ⓐ = 3 11/16" (94 mm)

Ⓑ = 5 1/8" (130 mm)

Hold-open points up to maximum opening with hold-open arm.

**Frame and trim permitting.*

Options

- Delayed action cylinder.
- Hold-open, EDA, HEDA, CUSH, HCUSH arm, SPRING CUSH, SHCUSH arms.
- Slim Line cover. (C)

Special Templates

Customized installation templates or products may be available to solve unusual applications.
Contact LCN for assistance.

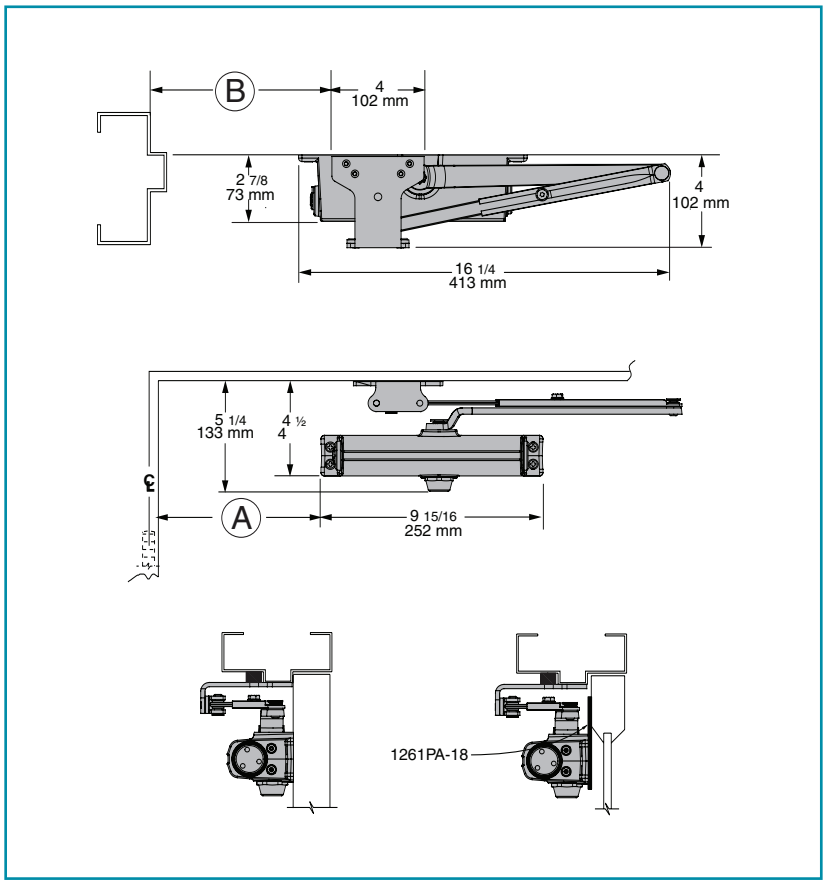

1260 REGULAR or HOLD-OPEN MOUNT

- **Butt Hinges** should not exceed 5" (127 mm) in width.
- **Auxiliary Stop** is recommended at hold-open point, where a door cannot swing 180°, or where CUSH-N-STOP arm is not used.
- **Clearance** for 1260-62PA shoe is 4" (102 mm) from door face.
- **Top Rail** less than 4 3/8" (111 mm) measured from the stop requires PLATE, 1260-18PA.
- **Stop Width** minimum 1" (25 mm).
- **Blade Stop** clearance, requires 1/2" (13 mm) BLADE STOP SPACER, 1260-61.
- **Auxiliary Shoe,** 1260-62A allows installation of regular arm with overhead holder/stop. Special templating required.
- **Delayed Action** Add suffix "DEL" to selected cylinder (eg. 1260 DEL). Delays closing from 100° to 67°, 130° to 70° or 180° to 73° depending on templating. Delay time adjustable up to approximately 1 minute.

LCN CLOSERS
121 W. RAILROAD AVE.
P.O. BOX 100
PRINCETON, IL, USA 61356-0100

PHONE 800-526-2400
FAX 800-248-1460
www.lcn.ingersollrand.com

9/07

1260 EDA MOUNT

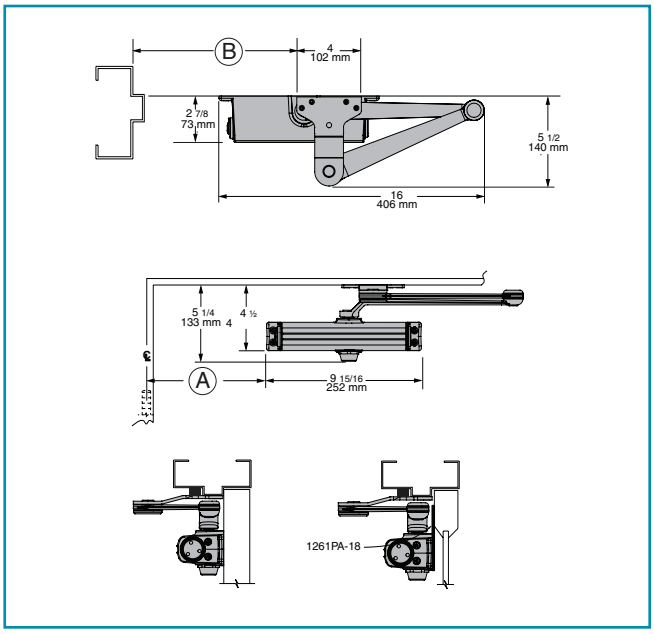

1260 CUSH MOUNT

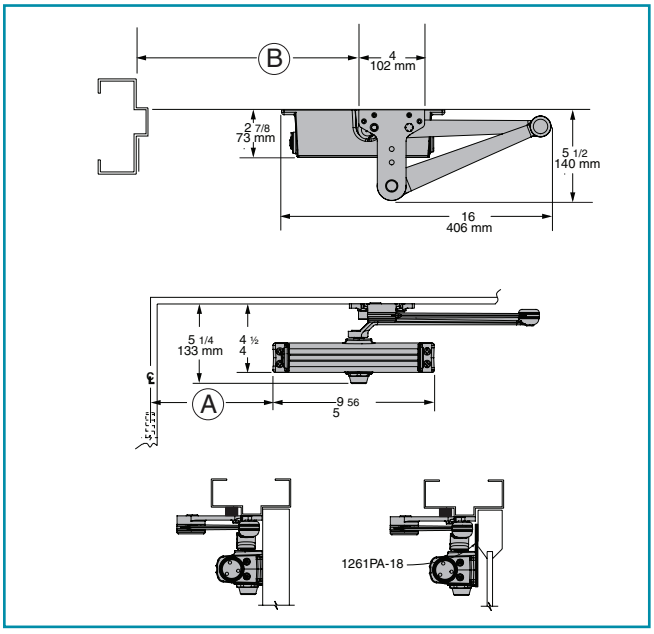

1260 EDA or CUSH-N-STOP MOUNTING

1260 closers ordered with EDA, CUSH or SPRING CUSH arms include 1260-201 FIFTH HOLE SPACER to support the shoe.

MAXIMUM OPENING

EDA template allows 120°.
Hold-open point up to maximum opening.
90°,
Ⓐ = 4 13/16" (122 mm)
Ⓑ = 9 1/2" (241 mm)
120°,
Ⓐ = 3 5/16" (84 mm)
Ⓑ = 8" (203 mm)

CUSH arms can be templated for maximum opening/hold-open point at
85°,
Ⓐ = 5 5/16" (135 mm)
Ⓑ = 10" (254 mm)
90°,
Ⓐ = 4 11/16" (119 mm)
Ⓑ = 9 3/8" (238 mm)
100°,
Ⓐ = 3 9/16" (90 mm)
Ⓑ = 8 1/4" (210 mm)
or 110°.
Ⓐ = 2 13/16" (71 mm)
Ⓑ = 7 1/2" (191 mm)
Spring Cush hold-open points are approximately 5° less than templated stop point.

- **Clearance** for 1260-62EDA or CUSH shoe is 5 1/2" (140 mm) from door face.
- **Head Frame** flush or rabetted requires CUSH FLUSH PANEL ADAPTER, 1260-419.
- **EDA or CUSH ARM** requires SHOE SUPPORT, 1260-30 for fifth screw anchorage where reveal is less than 3 1/16" (78 mm).
- **Delayed Action** Add suffix "DEL" to selected cylinder (eg. 1260 DEL). Delays closing for EDA from 90° to 61° or 120° to 63° depending on templating. Delays closing for CUSH from 85° to 60°, 90° to 62°, 100° to 63° or 110° to 65° depending on templating. Delay time adjustable up to approximately 1 minute.

LCN CLOSERS
121 W. RAILROAD AVE.
P.O. BOX 100
PRINCETON, IL, USA 61356-0100

PHONE 800-526-2400
FAX 800-248-1460
www.lcn.ingersollrand.com
9/07

ACCESSORIES

CYLINDERS

CYLINDER, 1260-3071
Standard, non-handed cast iron cylinder assembly.

ARMS

REGULAR ARM, 1260-3077
Non-handed arm mounts hinge side or top jamb.
P1260 closer includes PA SHOE, 1260-62PA required for parallel arm mounting.

PA SHOE, 1260-62PA
Required for parallel arm mounting.

LONG ARM, 1260-3077L
Optional, non-handed arm includes LONG ROD AND SHOE, 1260-79LR for top jamb mount with deep reveals.

HOLD-OPEN ARM, 1260-3049
Optional, non-handed arm mounts hinge side, top jamb or parallel arm (62PA required).
Hold-open adjustable at shoe.

LONG HOLD-OPEN ARM, 1260-3049L
Optional non-handed arm includes LONG HEAD AND TUBE, 1260-3048L for top jamb mount with deep reveals.

EXTRA DUTY ARM, 1260-3077EDA, 1260-3077EDA/G, 1260-3077EDA/145
Optional, non-handed parallel arm features solid forged steel main and forearm for potentially abusive installations.
Optional 1260-3077EDA/G for blade stop clearance.
Optional 1260-3077EDA/145 for flush transom frame.

HEDA ARM, 1260-3049EDA
Optional handed arm, provides hold-open function adjustable at shoe.

CUSH-N-STOP® ARM, 1260-3077CNS
Optional, non-handed parallel arm features solid forged steel main arm and forearm with stop in soffit shoe.

HCUSH ARM, 1260-3049CNS
Optional non-handed arm, provides hold-open function with templated stop/hold-open points. Handle controls hold-open function.

SPRING CUSH ARM,1260-3077SCNS
Optional, non-handed parallel arm for abusive applications features solid forged steel main arm and forearm with spring loaded stop in the soffit shoe.

SPRING HCUSH ARM, 1260-3049SCNS
Optional, non-handed parallel arm for abusive applications features solid forged steel main arm and forearm with spring loaded stop in the soffit shoe. Handle controls hold-open function.

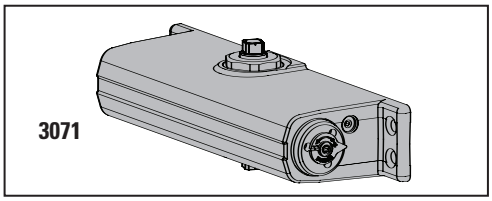

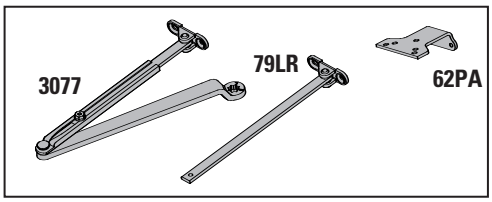

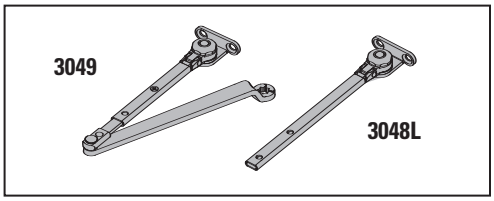

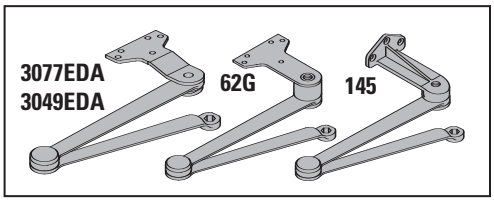

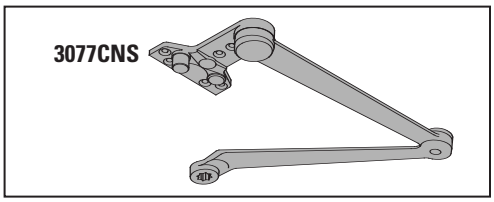

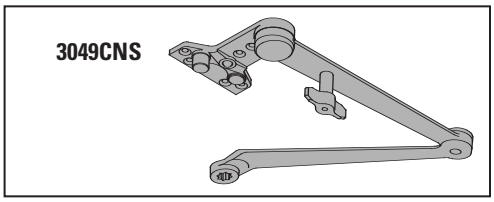

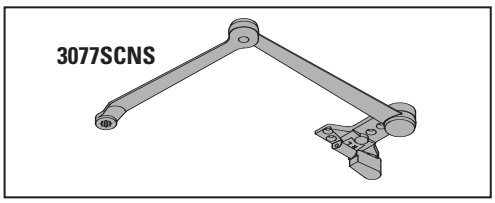

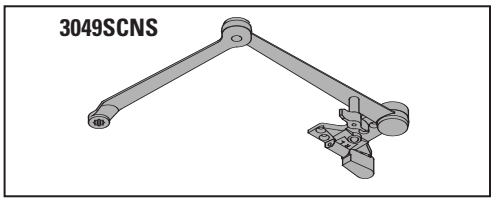

LCN CLOSERS
121 W. RAILROAD AVE.
P.O. BOX 100
PRINCETON, IL, USA 61356-0100

PHONE 800-526-2400
FAX 800-248-1260
www.lcn.ingersollrand.com
9/07

COVER

COVER, 1260-72
Standard, non-handed, slim line plastic cover.

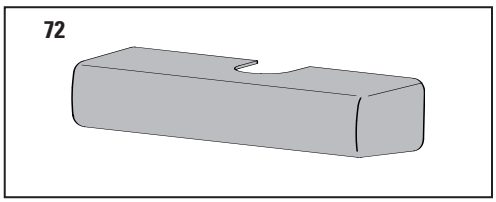

INSTALLATION ACCESSORIES

PLATE, 1260-18
Required for hinge side mount where top rail is less than 2 1/2" (64 mm).
Required for top jamb mounting where head frame is less than 1 3/4" (44 mm) or flush ceiling condition exists.
Plate requires minimum 1 1/2" (38 mm) minimum top rail or 1 1/4" (32 mm) head frame.

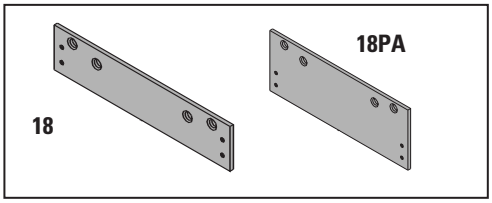

PLATE, 1260-18PA
Required for parallel arm mounting where top rail is less than 4 3/8" (111 mm), measured from the stop.
Plate requires 1 3/4" (44 mm) minimum top rail.

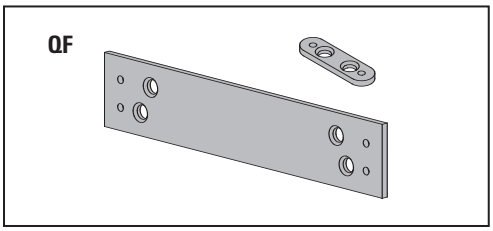

QUICK FIX™ BRACKET KIT, 1260-QF
Optional kit includes retro-fit mounting plates for closer cylinder and shoe. Useful in applications when previously drilled holes are damaged.

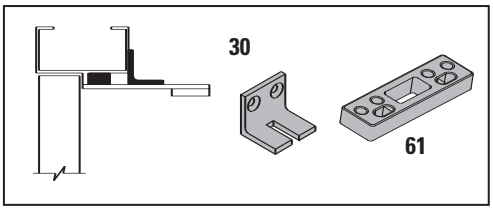

CUSH SHOE SUPPORT, 1260-30
Provide anchorage for fifth screw used with CUSH arms where reveal is less than 3 1/16" (78 mm).

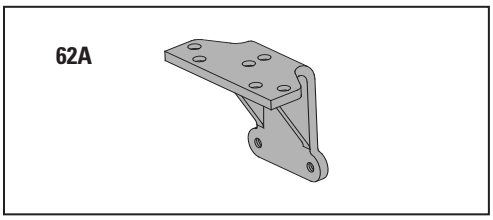

BLADE STOP SPACER, 1260-61
Lowers parallel arm shoe to clear 1/2" (13 mm) blade stop.

AUXILIARY SHOE, 1260-62A requires a top rail of 7" (178 mm).
Optional shoe replaces -62PA for parallel arm mounting of regular arm with overhead holder/stop.
Special template required.

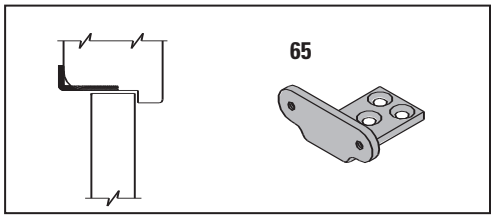

SOFFIT SHOE, 1260-65
Adapts hinge side shoe to rounded or bull nose trim.

CUSH FLUSH PANEL ADAPTER, 1260-419
Provides horizontal mounting surface for CUSH shoe on single rabetted or flush frame.

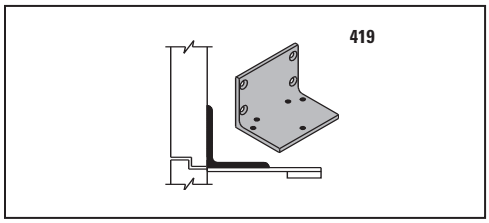

LCN CLOSERS
121 W. RAILROAD AVE.
P.O. BOX 100
PRINCETON, IL, USA 61356-0100

PHONE 800-526-2400
FAX 800-248-1460
www.lcn.ingersollrand.com
9/07

LCN 1260 SERIES

TABLE OF SIZES

Select closer based on width of door.
The spring power of a 1261 cylinder is field adjustable from size 1 through size 5 and is shipped adjusted to size 3.
PA mount adjustable - size 1 to 4.

→ Indicates recommended range of door width for closer size.

EXTERIOR (and VESTIBULE) DOOR WIDTH

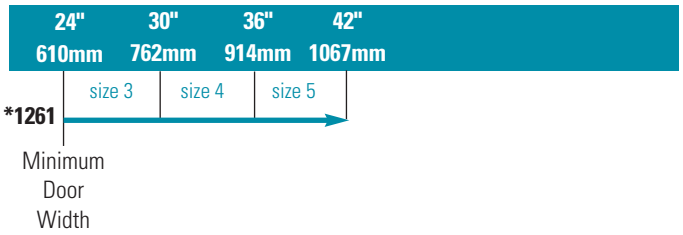

INTERIOR DOOR WIDTH

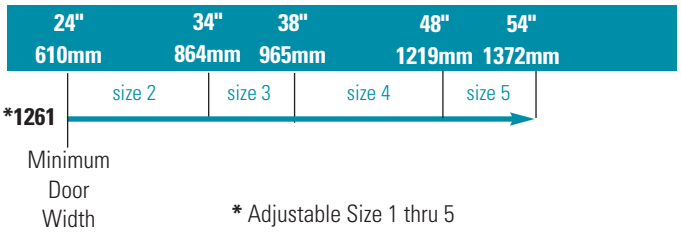

* Adjustable Size 1 thru 5

REDUCED OPENING FORCE 1260 CLOSERS

CAUTION ! Any manual door closer, including those certified by BHMA to conform to ANSI Standard A156.4, that is selected, installed and adjusted based on ADA or other reduced opening force requirements may not provide sufficient power to reliably close and latch a door.

Refer to POWER OPERATORS section for information on systems that meet reduced opening force requirements without affecting closing power.

	DOOR WIDTH	36"	42"	48"
♿	8.5* lbs.	1261	1261	1261
	5.0* lbs.	1261	1261	1261

** Maximum opening force*

HOW-TO-ORDER 1260 SERIES CLOSERS

1. SELECT FINISH

☐ Standard Powder Coat _____
Aluminum, Dark Bronze , Tan, Statuary, Light Bronze, Black, Brass.

Closer will be shipped with:
- STANDARD CYLINDER,
- REGULAR ARM,
- SELF-REAMING and TAPPING SCREWS, unless options listed below are selected.

CLOSER OPTIONS

CYLINDER
☐ Delayed Action (DEL)

COVER
☐ Slim line cover (C)

FINISH
☐ Custom Powder Coat (RAL) _____
☐ SRI primer

ARM
☐ Regular w/62PA (Rw/PA)
☐ Long (LONG)
☐ Regular w/62A (Rw/62A)
☐ Hold-Open (H)
☐ Hold-Open w/62PA (Hw/PA)
☐ Long Hold-Open(HLONG)
☐ EDA (optional -62G or -145)
☐ HEDA (specify right or left hand), (optional -62G or -145)
☐ Cush-N-Stop (CUSH)
☐ HCush (HCUSH)
☐ Spring Cush(SCUSH)
☐ Spring HCush (SHCUSH)

OPTIONAL SCREW PACKS
☐ TB* w/Self-Reaming and Tapping Screws (TBSRT)
☐ Wood & Machine Screw (WMS)
☐ TB*, Wood & Machine Screw (TBWMS)
☐ TORX Machine Screw (TORX)
☐ TB* & TORX Machine Screw (TBTORX)
* Specify door thickness if other than 1 3/4".

SPECIAL TEMPLATE
☐ ST- _____

INSTALLATION ACCESSORIES
☐ Plate, 1260-18
☐ Plate, 1260-18PA
☐ CUSH Shoe Support, 1260-30
☐ Blade Stop Spacer, 1260-61
☐ Auxiliary Shoe, 1260-62A
☐ Soffit Shoe, 1260-65
☐ CUSH Flush Panel Adapter, 1260-419
☐ Quick Fix™ Bracket Kit, 1260-QF

LCN CLOSERS
121 W. RAILROAD AVE.
P.O. BOX 100
PRINCETON, IL, USA 61356-0100
PHONE 800-526-2400
FAX 800-248-1460
www.lcn.ingersollrand.com
9/07