FEATURES

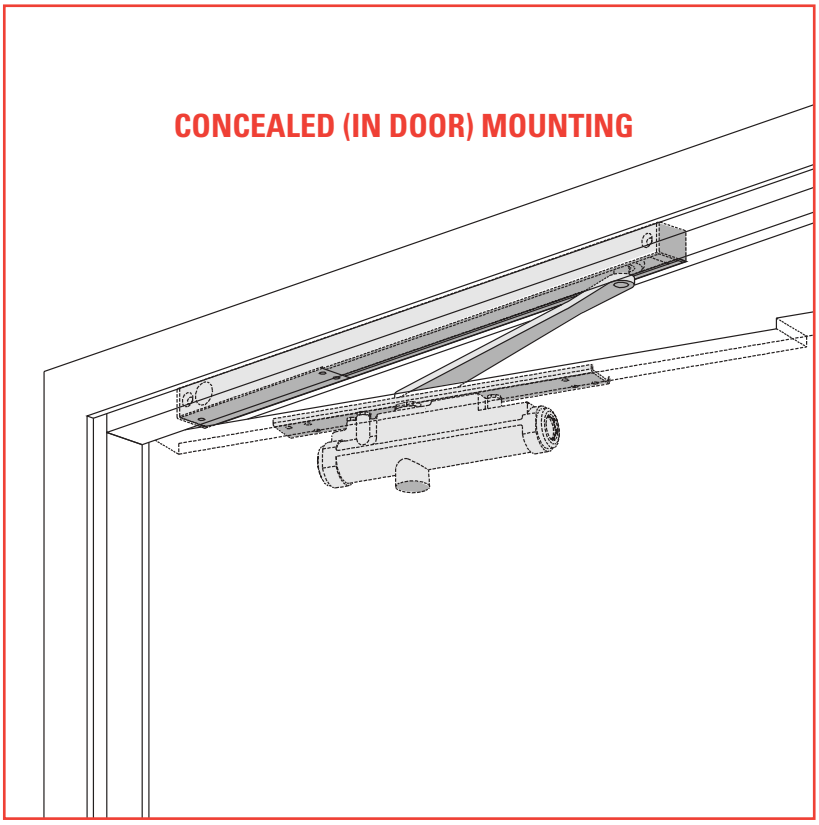

The 3130SE SENTRONIC® is a concealed in the door, closer/holder designed to provide single point hold-open for fire and smoke barrier doors. Door is held open until current interruption releases the holding mechanism and the door closes. Single lever (track) arm closer is specifically designed for interior doors.

The 3130SE and SEL Series is UL listed for metal smoke barrier or labeled fire doors.

- Standard 3130SE series closer shipped with a standard arm, 24V or 120V SE track (please specify), track roller, and wood and machine screw pack. See 3130SE Series page 9 for options.
- Sized cylinders for interior doors to 4'0".
- Functions as full rack and pinion door closer when hold-open is not engaged or current is interrupted.
- Handed for right or left swinging door.
- Interfaces with fire alarm systems. Consult factory.
- Standard or optional custom powder coated finish.
- Optional plated finish on arm and fasteners.

Door and frame manufacturer must have preparation included in their UL procedures. Tested and certified under ANSI Standard A156.15. Conforms to life safety code, NFPA 101.

MOUNTING					FINISH		COVER		CYLINDER				*ARM FUNCTION			
HINGE (PULL) SIDE	TOP JAMB (PUSH)	STOP FACE (PUSH)	CONCEALED (FRAME)	CONCEALED (DOOR)	POWDER COAT	PLATED	PLASTIC	METAL	HANDED	NON-SIZED	SIZED	SINGLE-POINT HOLD-OPEN	MULTI-POINT HOLD-OPEN	BYPASS 80/140	STANDARD (SINGLE)	REGULAR (DOUBLE)	SWING FREE	DOUBLE EGRESS
○	○	○	○	●	●	●	○	○	●	○	●	●	○	○	110°	○	○	○

● *Available*
○ *Not available*

** Maximum hold-open with standard template. See individual closer series for degrees of opening and hold-open per installation.*

LCN CLOSERS
121 W. RAILROAD AVE.
P.O. BOX 100
PRINCETON, IL, USA 61356-0100

PHONE 800-526-2400
FAX 800-248-1460
www.lcnclosers.com
3/04

LCN 3130SE SERIES

MOUNTING DETAILS

CONCEALED MOUNTING

For interior smoke barrier and labeled fire doors.

MAXIMUM OPENING

Templating allows 110°.

Hold-open points between 85° and 110° in approximately 3° increments.

SEL arm and track locate hold-open at 110°, 120° and 130°.

SE, SEL ELECTRICAL OPTIONS

These track assemblies require a single power circuit for the holding solenoid.

SE or SEL holding solenoid is either 24V or 120V input, please specify.
An optional 4040SE-3210 TRANSFORMER reduces 120V AC line voltage to 24V AC.
Circuitry accepts either AC or DC input.

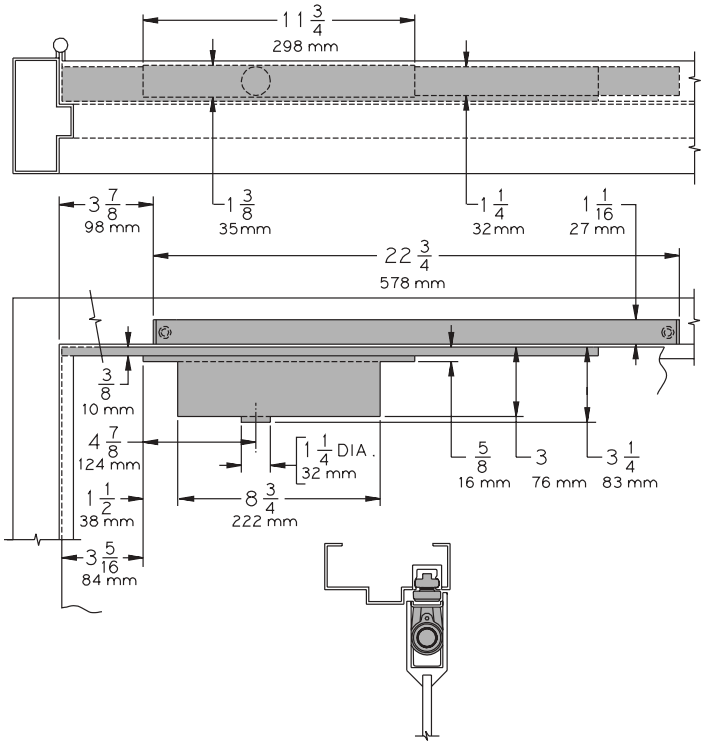

- **Butt Hinges** should not exceed 5" (127 mm) in width. Consult factory for pivot hung installations.
- **Auxiliary Stop** is recommended at hold-open point.
- **Top Rail** minimum 4" (102 mm).
- **Door Thickness** 1 3/4" (44 mm) minimum. Please consult the door manufacturer to assure that the door integrity and warranty is maintained after installing the 3130SE series door closer in 1 3/4" (44 mm) thickness wood doors.
- **Door Width** 2'4" (711 mm) minimum for single door with SE. 2'8" (813 mm) minimum for door with SEL.
- **Wiring Diagram**

Options

- Long (SEL) track and arm.
- 24V or 120V input, please specify.

Special Templates

Customized installation templates or products may be available to solve unusual applications. Contact LCN for assistance.

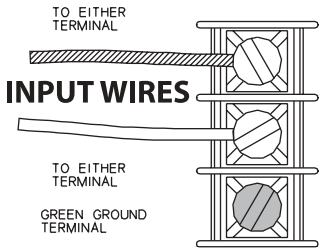

SE WIRING DIAGRAM

LCN CLOSERS
121 W. RAILROAD AVE.
P.O. BOX 100
PRINCETON, IL, USA 61356-0100

PHONE 800-526-2400
FAX 800-248-1460
www.lcnclosers.com

3/04

CYLINDER

SE CYLINDER, 3130SE-3071
Standard, handed cast iron cylinder assembly.
For various applications see "Table of Sizes" on 3130SE Series page 10.

ARM

STANDARD ARM, 3130SE-3077T
Handed arm. Arm adjustable to select hold-open point.

LONG ARM, 3130SEL-3077T
Optional, solid arm provides hold-open point from 110° to 130°, determined by track templating.
Used with SEL TRACK 3130SEL-3038 only.

TRACKS

SE TRACK, 3130SE-3038
Standard, non-handed track.
Circuitry accepts either AC or DC input.
24V holding solenoid **(24)** or
120V holding solenoid **(120)**, please specify.

SEL TRACK, 3130SEL-3038
Optional, long non-handed track.
Used with LONG ARM, 3130SEL-3077T, only.
Circuitry accepts either AC or DC input.
24V holding solenoid **(24)** or
120V holding solenoid **(120)**, please specify.

SWITCH

TEST SWITCH, 3130SE-3436

INSTALLATION ACCESSORIES

CONDUIT QUICK-CONNECTOR, 3130SE-81
Two piece connector for use with 1/2" conduit.
See page 15 for illustration.

TRACK ROLLER, 3130SE-3034
Quiet, low friction roller assembly.
Shoulder dimension "X" = 1/8" (3 mm).

TRACK SLIDER, 3130SE-168
Alloy metal slider for use in SE series tracks only.

TRANSFORMER, 4040SE-3210
Reduces line voltage from 120V to 24V AC.
Mounted on plate for 4" (102 mm) x 4" x 2 1/8" (54 mm) junction box (by others).

3071
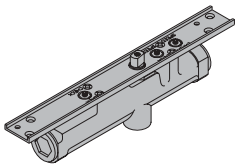

3077T
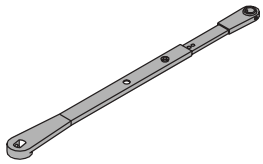

3130SEL-3077T
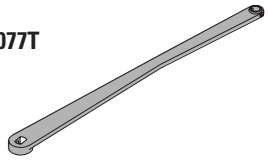

3038
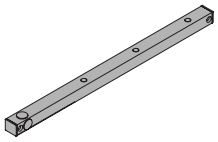

3130SEL-3038
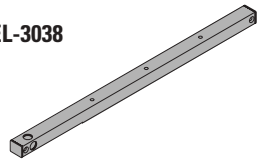

3130SE-3436
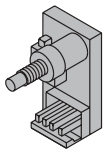

3034
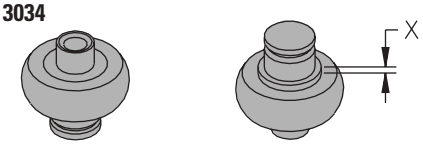

168
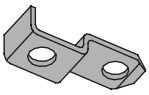

4040SE-3210
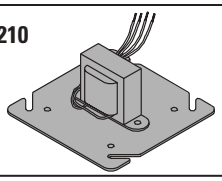

LCN CLOSERS
121 W. RAILROAD AVE.
P.O. BOX 100
PRINCETON, IL, USA 61356-0100

PHONE 800-526-2400
FAX 800-248-1460
www.lcnclosers.com
3/04

LCN 3130SE SERIES

ORDERING INFORMATION

TABLE OF SIZES

Select closer based on width of door.
Sized 3130SE series cylinders available in size 3 or 4.
Closing power of all 3130SE Series closers is not adjustable.

→ Indicates recommended range of door width for closer size.
Note: For SE, minimum door width 28" (711mm).
For SEL, minimum door width 32" (813mm).

INTERIOR DOOR WIDTH

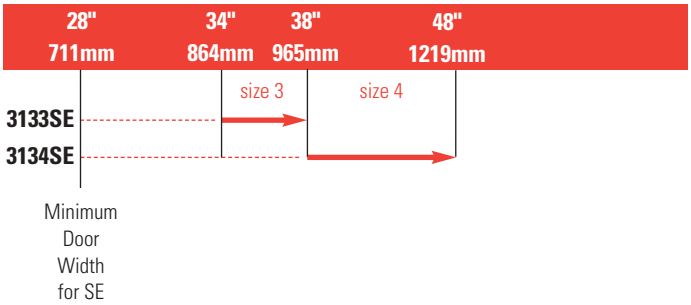

HOW-TO-ORDER 3130SE SERIES CLOSERS

1. SELECT CYLINDER SIZE.

☐ 3133SE
☐ 3134SE

2. SPECIFY HAND.

☐ RH
☐ LH

3. SELECT TRACK.

☐ SE
☐ SEL (requires long arm)

4.VOLTAGE

☐ 24V AC/DC
☐ 120V AC/DC

5. SPECIFY FINISH.

☐ Standard Powder Coat _____
Aluminum, Dark Bronze , Tan, Statuary, Light Bronze, Black, Brass.

Closer will be shipped with:
- STANDARD ARM,
- TRACK ROLLER,
- STANDARD TRACK,
- WOOD & MACHINE SCREW PACK,
unless options listed below are selected.

CLOSER OPTIONS

ARM

☐ Long Arm* (LONG)
* use with SEL track only

FINISH

☐ Custom Powder Coat (RAL) _____
☐ Plated Finish, US _____

SCREW PACK

☐ TORX Machine Screw (TORX)

INSTALLATION ACCESSORIES

☐ Transformer, 4040SE-3210

SPECIAL TEMPLATE

☐ ST-_____

LCN CLOSERS
121 W. RAILROAD AVE.
P.O. BOX 100
PRINCETON, IL, USA 61356-0100

PHONE 800-526-2400
FAX 800-248-1460
www.lcnclosers.com

3/04