FEATURES

STOP FACE (PUSH SIDE) MOUNT

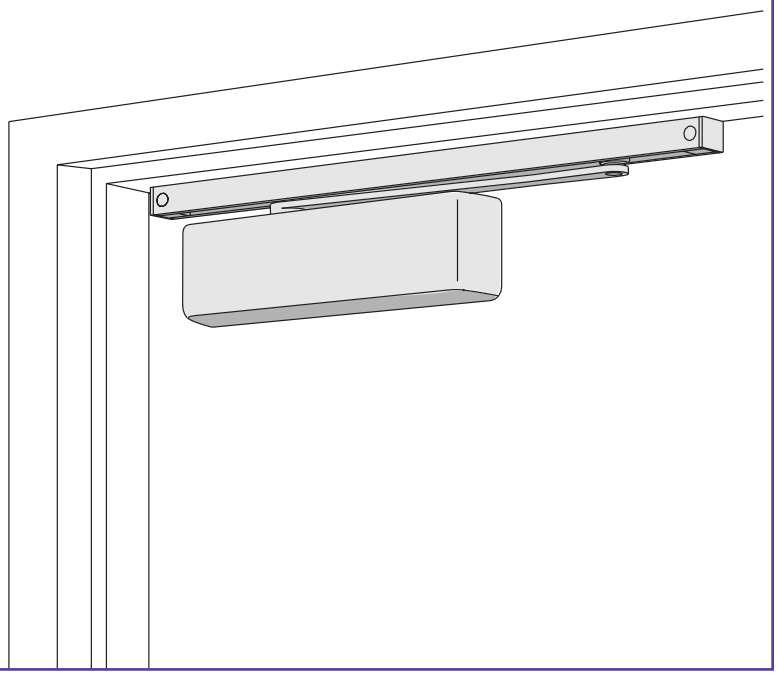

The 4110T SMOOTHEE® is LCN's best performing heavy duty track closer designed specifically for interior doors in institutional and other high traffic applications.

- **Cast Iron**
- **Forged Steel Main Arm**
- **Double Heat Treated Steel Pinion**
- **All Weather Fluid**
- **Fast & Accurate Installation**
- **UL & ULC Listed**

- Standard 4110T series closer shipped with standard arm, standard track, track roller, standard plastic cover and self reaming and tapping screws. See 4110T Series pages 53 & 54 for options.
- Sized cylinders for interior doors to 4'0".
- Closer mounts stop face side, specify right or left swinging door.
- Closers to meet ADA requirements. See 4110T Series page 55.
- Standard or optional custom powder coat finish.
- Optional plated finish on cover, arm and fasteners.
- Optional SRI primer for installations in corrosive conditions.
- The 4110T Series is UL and ULC listed with a standard track for self-closing doors.
- Tested and certified under ANSI Standard A156.4, grade one.

MOUNTING					FINISH		COVER			CYLINDER					**ARM FUNCTION							
HINGE (PULL) SIDE	TOP JAMB (PULL)	TOP JAMB (PUSH)	PARALLEL ARM	STOP FACE	POWDER COAT	PLATED	PLASTIC	METAL	DESIGNER METAL	NON-HANDED	NON-SIZED	ACCESSIBILITY	DELAYED ACTION	AVB***	REGULAR (DOUBLE)	STANDARD (SINGLE)	HOLD-OPEN	FUSIBLE LINK	EDA/HEDA	CUSH/HCUSH	SCUSH/SHCUSH
○	○	○	○	●	●	●	●	●	○	○	○	♿	○	○	○	110°	100°	○	○	○	○

● *Available*
○ *Not available*

♿ *Closer available with less than 5.0 lbs. opening force on 36" door.*
***Maximum opening with standard template.*
**** Advanced Variable Backcheck*

LCN CLOSERS
121 W. RAILROAD AVE.
P.O. BOX 100
PRINCETON, IL, USA 61356-0100

PHONE 800-526-2400
FAX 800-248-1460
www.lcnclosers.com
3/04

LCN 4110T SERIES

STOP FACE (PUSH SIDE) MOUNTING

MAXIMUM OPENING

Templating allows 110° with standard track arm, limited to 100° with optional bumper tracks.

Hold-open points at 85°, 90°, 95°, or 100° with hold-open tracks.

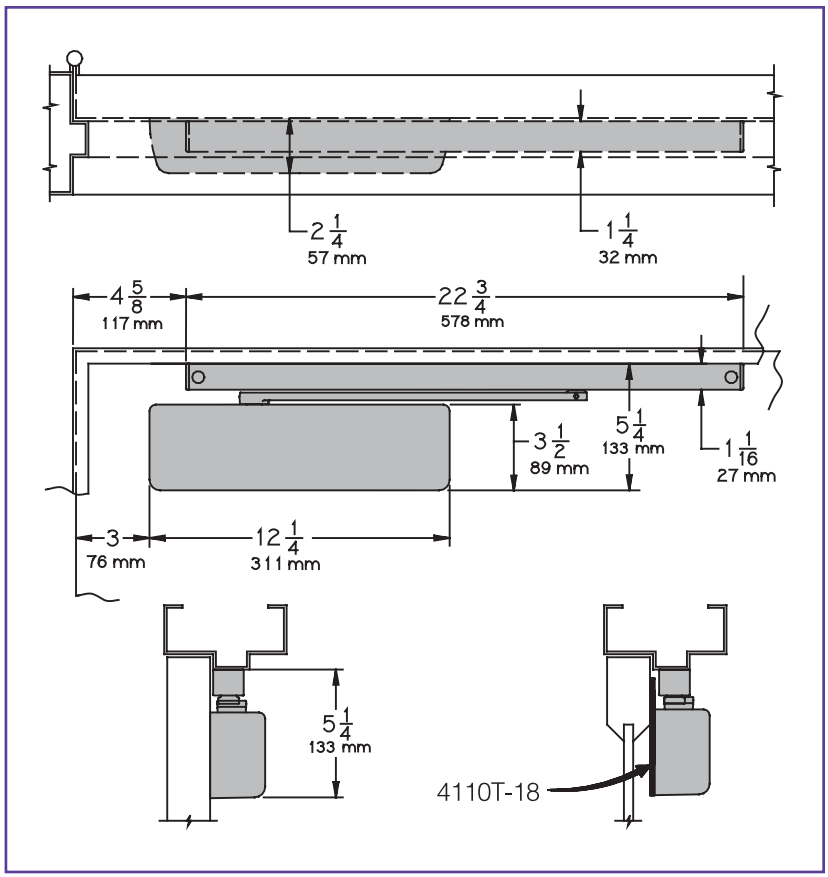

- **Butt Hinges** should not exceed 5" (127 mm) in width.
- **Auxiliary Stop** is recommended at hold-open point or where a door cannot swing 110°.
  Optional track bumper assembly assists backcheck in cushioning the opening swing of the door. It is not intended to replace an auxiliary stop.
- **Clearance** projects 2 1/4" (57 mm) from face of door.
- **Top Rail** less than 5 1/4" (133 mm) measured from stop, requires PLATE, 4110T-18.
  Plate requires 2 1/4" (57 mm) minimum.
- **Stop Width** minimum 1 1/4" (32 mm).

Options

- Standard track with bumper, hold-open track, hold-open track with bumper.
- Metal or lead lined cover.

Special Templates

Customized installation templates or products may be available to solve unusual applications. Contact LCN for assistance.

LCN CLOSERS
121 W. RAILROAD AVE.
P.O. BOX 100
PRINCETON, IL, USA 61356-0100

PHONE 800-526-2400
FAX 800-248-1460
www.lcnclosers.com
3/04

CYLINDERS

CYLINDER, 4110T-3071

Standard, handed cast iron cylinder assembly. For various applications see "Table of Sizes" on 4110T Series page 55.

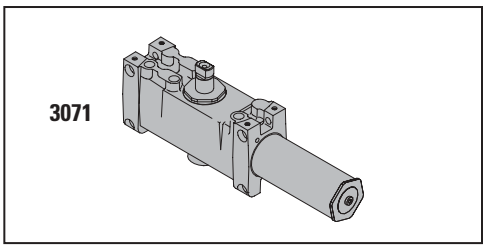

COVERS

COVER, 4110T-72

Standard, non-handed plastic cover.

LEAD LINED COVER, 4110T-72LL

Optional non-handed cover.

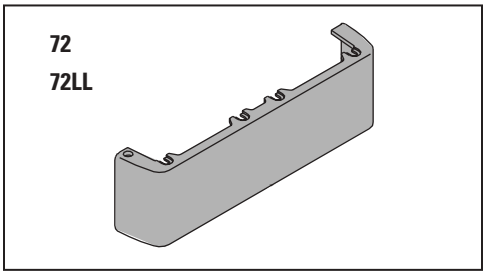

METAL COVER, 4110T-72MC

Optional, handed cover. Required for plated finishes and custom powder coat finishes.

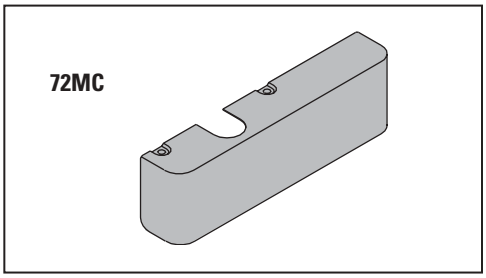

ARM

STANDARD ARM, 4110T-3077T

Handed arm.
Roller not included with arm.

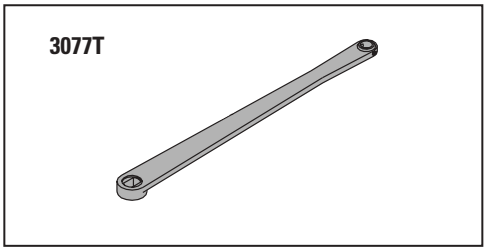

TRACKS

STANDARD TRACK, 4110T-3038

Standard, non hold-open, non-handed track.
Will accept hold-open clip and/or bumper assembly.

STANDARD TRACK with BUMPER, 4110T-3038B

Optional non hold-open, non-handed track with bumper assembly installed.
Will accept hold-open clip.

HOLD-OPEN TRACK, 4110T-3038H

Optional, non-handed track with hold-open clip installed.
Will accept bumper assembly.

HOLD-OPEN TRACK with BUMPER, 4110T-3038HB

Optional, non-handed track with hold-open clip and bumper assembly installed.

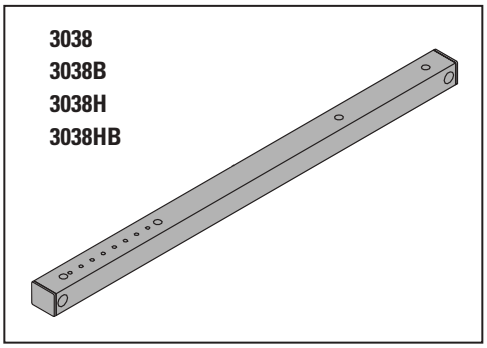

LCN CLOSERS
121 W. RAILROAD AVE.
P.O. BOX 100
PRINCETON, IL, USA 61356-0100

PHONE 800-526-2400
FAX 800-248-1460
www.lcnclosers.com
3/04

INSTALLATION ACCESSORIES

PLATE, 4110T-18

Required where top rail, when measured from the stop, is less than 5 1/4" (133 mm).
Plate requires minimum 2 1/4" (57 mm) minimum top rail.

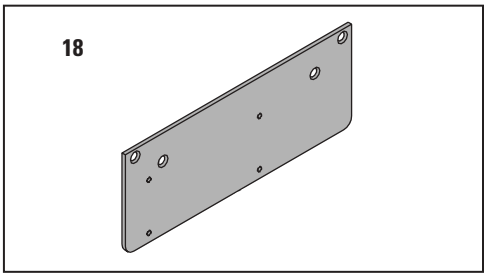

TRACK BUMPER, 4110T-169

Mounts in track to assist backcheck, not replace auxiliary stop.
Limits maximum opening.
Consists of bumper, bumper post, and mounting screw.

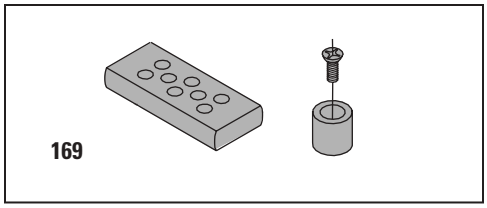

HOLD-OPEN CLIP, 4110T-3054

Mounts in track to provide hold-open function.
Hold-open point controlled by clip location.

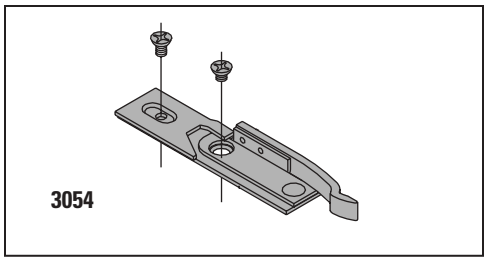

TRACK ROLLER, 4110T-3034

Quiet, low friction roller assembly.
Shoulder dimension "X" = 1/16" (2 mm).

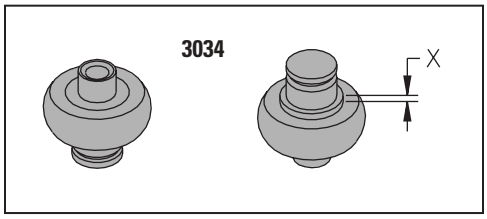

LCN CLOSERS
121 W. RAILROAD AVE.
P.O. BOX 100
PRINCETON, IL, USA 61356-0100

PHONE 800-526-2400
FAX 800-248-1460
www.lcnclosers.com
3/04

TABLE OF SIZES

Select closer based on width of door.
Sized 4110T series cylinders available in size 1, 3 or 4.
Closing power of all 4110T Series closers may be increased 15%.
Specify next higher size closer where strong drafts exist.

→ Indicates recommended range of door width for closer size.

INTERIOR DOOR WIDTH

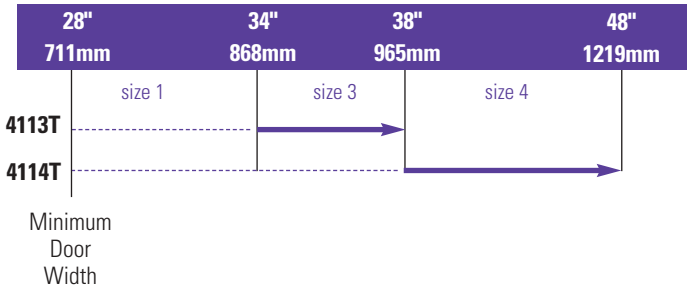

REDUCED OPENING FORCE 4110T CLOSERS

CAUTION ! Any manual door closer, including those certified by BHMA to conform to ANSI Standard A156.4, that is selected, installed and adjusted based on ADA or other reduced opening force requirements may not provide sufficient power to reliably close and latch a door.

Refer to POWER OPERATORS section for information on systems that meet reduced opening force requirements without effecting closing power.

	DOOR WIDTH	36"	42"	48"
♿	8.5* lbs.	N/A	N/A	N/A
	5.0* lbs.	4111T	4111T	4111T

** Maximum opening force*

HOW-TO-ORDER 4110T SERIES CLOSERS

1. SELECT CYLINDER SIZE

☐ 4111T (ADA)
☐ 4113T
☐ 4114T

2. SPECIFY HAND

☐ RH
☐ LH

3. SELECT FINISH

☐ Standard Powder Coat _____
Aluminum, Dark Bronze , Tan, Statuary, Light Bronze, Black, Brass.

Closer will be shipped with:
- STANDARD COVER,
- STANDARD ARM,
- TRACK ROLLER,
- STANDARD TRACK,
- SELF-REAMING and TAPPING SCREWS, unless options listed below are selected.

CLOSER OPTIONS

COVER

☐ Lead Lined (LL)
☐ Metal (MC)

FINISH

☐ Custom Powder Coat (RAL)_____
(handed metal cover required)
☐ Plated Finish, US _____
(handed metal cover required)
☐ SRI primer

SPECIFY TRACK

☐ Standard with Bumper (BUMPER)
☐ Hold-Open (HO)
☐ Hold-Open with Bumper (HBUMPER)

SPECIFY SCREW PACK

☐ TB* w/Self-Reaming and Tapping (TBSRT)
☐ Wood & Machine Screw (WMS)
☐ TB*, Wood & Machine Screw (TBWMS)
☐ TORX Machine Screw (TORX)
☐ TB* & TORX Machine Screw (TBTRX)
* Specify door thickness if other than 1 3/4".

INSTALLATION ACCESSORIES

☐ Plate, 4110T-18

SPECIAL TEMPLATE

☐ ST- _____

LCN CLOSERS
121 W. RAILROAD AVE.
P.O. BOX 100
PRINCETON, IL, USA 61356-0100

PHONE 800-526-2400
FAX 800-248-1460
www.lcnclosers.com
3/04