FEATURES

CONCEALED (IN 1 3/4" TUBE) MOUNTING

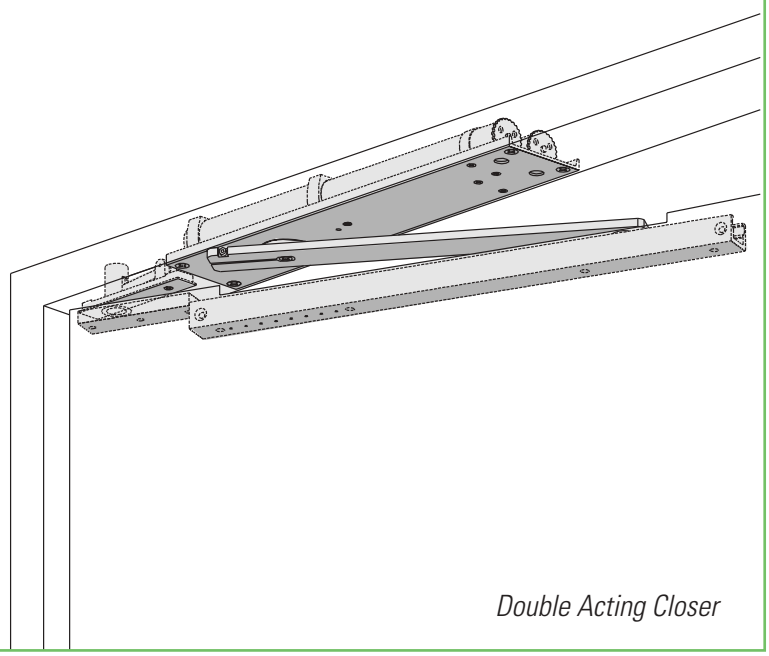

Double Acting Closer

The concealed 6030 Series PACER® is a heavy duty, double acting closer designed to fit in a narrow, minimum 1 3/4" aluminum transom. The single lever arm and roller assembly provides smooth, quiet door control and the choice of finishes and track functions meet virtually all architectural requirements. Installation at left illustrated with center pivot set (not included).

The 6030 Series is UL listed for self-closing doors, non hold-open. Tested and certified under ANSI Standard A156.4.

- Standard 6030 series closer shipped with standard arm, standard track with bumper, mounting/finish plate and wood and machine screw pack. See 6030 Series page 35 for options.
- Sized, double acting cylinders for interior doors to 4'6" and exterior doors to 3'6".
- Aluminum frame requires minimum 1 3/4" (44 mm) x 4" (102 mm) tube.
- Closers to meet ADA requirements. See 6030 Series page 36.
- Adjustment of spring power and latch speed independent for either swing.
- Backcheck and general speed adjustment are common for both swings.
- Standard or optional custom powder coat finish.
- Optional plated finish on arm, fasteners and mounting/finish plate.
- Optional SRI primer for installations in corrosive conditions.

CONCEALED MOUNTING			FINISH		CYLINDER				ARM		*ARM FUNCTION		
IN FRAME	IN 1 3/4" TUBE	IN DOOR	POWDER COAT	PLATED	HANDED	SIZED	ACCESSIBILITY	DELAYED ACTION	CONCEALED	EXPOSED	STANDARD (SINGLE)	REGULAR (DOUBLE)	HOLD-OPEN
○	●	○	●	●	○	●	♿	○	●	○	95°	○	95°

● *Available*
○ *Not available*

♿ *Closer available with less than 5.0 lbs. opening force on 36" door.*
**Maximum opening/hold-open point with standard template. See individual closer series for degrees of opening per installation.*

LCN CLOSERS
121 W. RAILROAD AVE.
P.O. BOX 100
PRINCETON, IL, USA 61356-0100

PHONE 800-526-2400
FAX 800-248-1460
www.lcnclosers.com
3/04

LCN 6030 SERIES

MOUNTING DETAILS

CONCEALED MOUNTING

For interior or exterior doors.
Double acting cylinder in cased frame.
Concealed arm and track in door top rail.
Center pivots only.

MAXIMUM OPENING

Center pivot template allows 95°.

Adjustable hold-open points from 85° to 95°, with hold-open track.

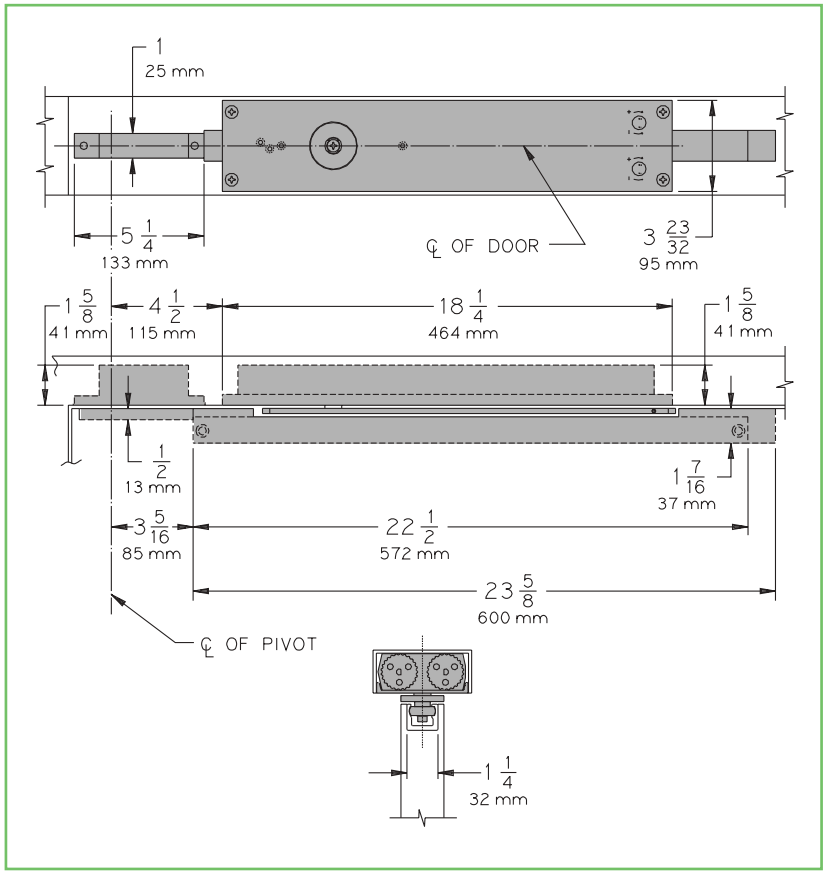

- **Auxiliary Stop** is recommended where a door cannot swing 95°. Track bumper assembly assists backcheck in cushioning the opening swing of the door. It is not intended to replace an auxiliary stop.
- **Center Pivot Set,** must be used but ordered separately.
- **Door Width** 30" (762 mm) minimum with 1 3/4" (44 mm) pivot centers.
- **Top Rail** 1 7/16" (36 mm) mortise required.
  3/8" (10 mm) cutout required at top of the door, both sides.
- **Door Thickness** 1 3/4" (44 mm) minimum.
- **Centering Adjustment** provided by eccentric in track roller with 3/4" (19 mm) adjustment to center a 36" (914 mm) door in the opening.
- **Hollow Metal Frame** Consult factory for installation instructions.
- **Wood Frame** installation simplified by WOOD MOUNTING CLIP SET, 6030-416. Consult factory for preparation details.

Options

- Hold-open track with Bumper

Special Templates

Customized installation templates or products may be available to solve unusual applications. Contact LCN for assistance.

LCN CLOSERS
121 W. RAILROAD AVE.
P.O. BOX 100
PRINCETON, IL, USA 61356-0100

PHONE 800-526-2400
FAX 800-248-1460
www.lcnclosers.com

3/04

CYLINDERS

CYLINDER, 6030-3071

Standard, non-handed, cast iron cylinder assembly with mounting plate. For various applications see "Table of Sizes" on 6030 Series page 36.

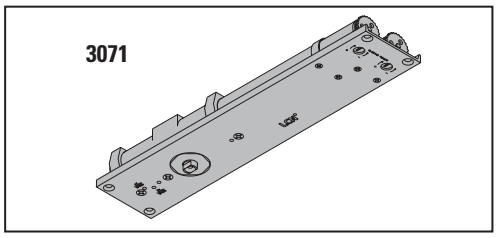

ARM

STANDARD ARM, 6030-3077T

Non-handed 5/16" (8 mm) thick arm.
Track roller not included with arm.

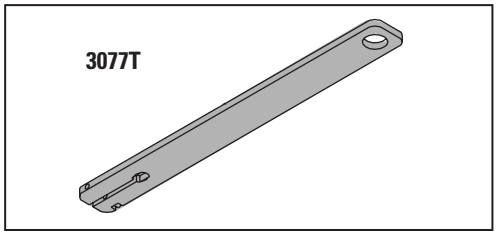

TRACKS

STANDARD TRACK with BUMPER, 6030-3038B

Standard, non hold-open, non-handed track with bumper.
Will accept hold-open clip.

HOLD-OPEN TRACK with BUMPER, 6030-3038HB

Optional, non-handed hold-open track with bumper.

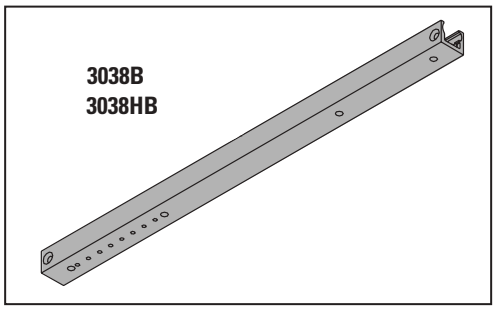

INSTALLATION ACCESSORIES

WOOD MOUNTING CLIP SET, 6030-416

Simplifies mounting closer in wood frame. Includes latch stile clip, hinge stile clip, and cover. For use with Ives Series center pivots. Consult factory for special template.

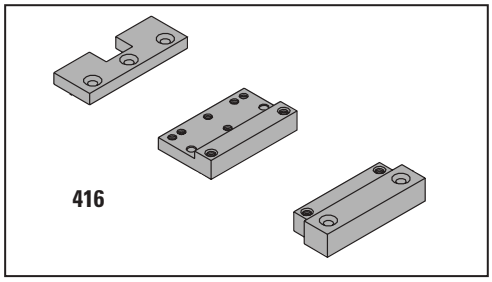

TRACK BUMPER, 6030-169

Mounts in track to assist backcheck. Limits maximum opening.
Consists of bumper, bumper post, and mounting screw.
NOTE: Track bumper does not replace auxiliary stop.

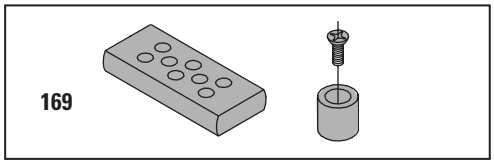

HOLD-OPEN CLIP, 6030-3054

Mounts in track to provide hold-open function.
Hold-open point controlled by clip location.

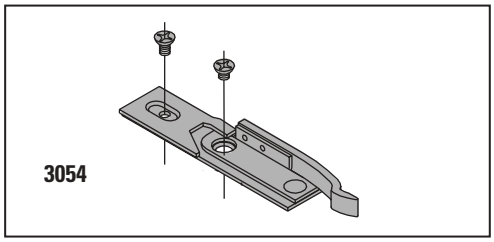

TRACK ROLLER, 6030-3034

Quiet, low friction roller assembly includes eccentric with 3/4" (19 mm) adjustment to center 36" (914 mm) door.

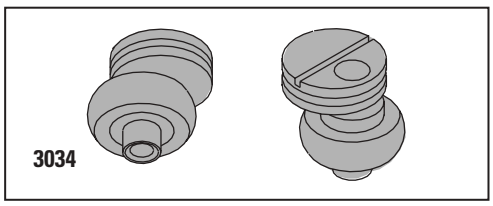

LCN CLOSERS
121 W. RAILROAD AVE.
P.O. BOX 100
PRINCETON, IL, USA 61356-0100

PHONE 800-526-2400
FAX 800-248-1460
www.lcnclosers.com
3/04

LCN 6030 SERIES

ORDERING INFORMATION

TABLE OF SIZES

Select closer based on width of door.
6030 Series cylinders available in size 1, 2, 3, 4, or 5.
Closing power of all 6030 Series closers may be increased 35%.
Specify next higher size closer where strong drafts exist.

→ Indicates recommended range of door width for closer size.
Note: Minimum door width 30" (762 mm).

EXTERIOR (and VESTIBULE) DOOR WIDTH

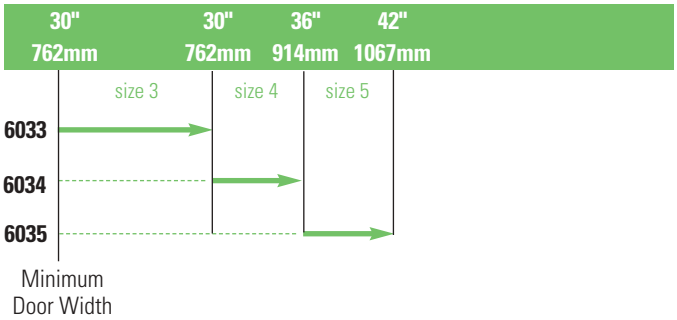

INTERIOR DOOR WIDTH

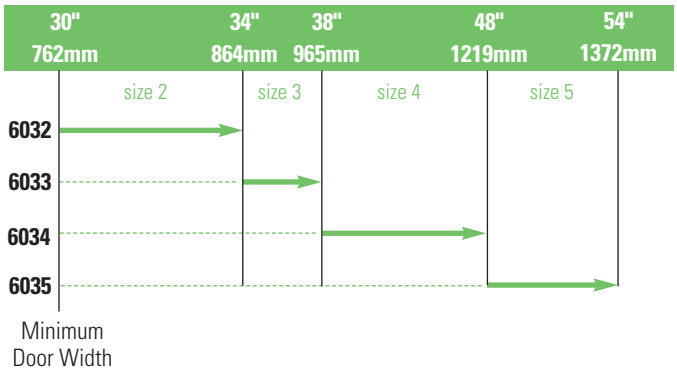

REDUCED OPENING FORCE 6030 CLOSERS

CAUTION ! Any manual door closer, including those certified by BHMA to conform to ANSI Standard A156.4, that is selected, installed and adjusted based on ADA or other reduced opening force requirements may not provide sufficient power to reliably close and latch a door.

Refer to POWER OPERATORS section for information on systems that meet reduced opening force requirements without affecting closing power.

	DOOR WIDTH	36"	42"	48"
♿	8.5* lbs.	6033	6034	6035
	5.0* lbs.	6031	6032	6032

** Maximum opening force*

HOW-TO-ORDER 6030 SERIES CLOSERS

1. SELECT CYLINDER SIZE

☐ 6031 (ADA)
☐ 6032
☐ 6033
☐ 6034
☐ 6035

2. SPECIFY FINISH

☐ Standard Powder Coat _____

Aluminum, Statuary, Light Bronze, Tan,

Brass, Black, Dark Bronze

Closer will be shipped with:
- STANDARD ARM,
- TRACK ROLLER,
- STANDARD TRACK with BUMPER,
- WOOD and MACHINE SCREW PACK,
unless options listed below are selected.

CLOSER OPTIONS

TRACK

☐ Hold-open with Bumper (HBUMPER)

FINISHES

☐ Custom Powder Coat (RAL) _____
☐ Plated Finish, US _____
☐ SRI primer

SCREW PACK

☐ TORX Machine Screw (TORX)

INSTALLATION ACCESSORIES

☐ Wood Clip Set, 6030-416

SPECIAL TEMPLATE

☐ ST- _____

LCN CLOSERS
121 W. RAILROAD AVE.
P.O. BOX 100
PRINCETON, IL, USA 61356-0100

PHONE 800-526-2400
FAX 800-248-1460
www.lcnclosers.com

3/04