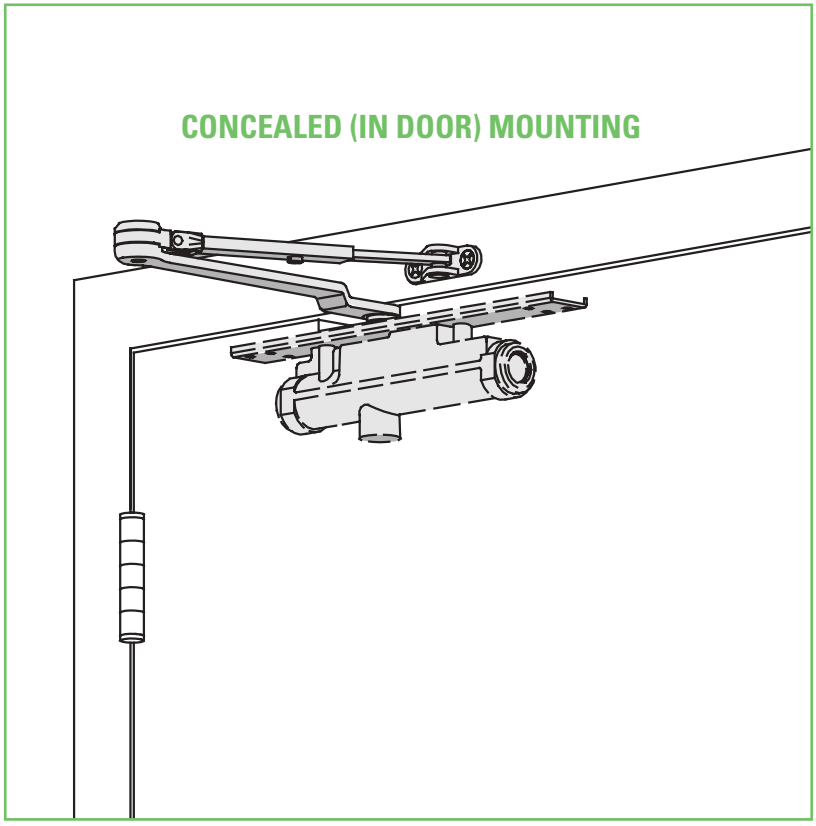

The concealed 3030 is designed to mount in a 1 3/4" interior door. The double lever arm provides superior door control and the choice of finishes and arm functions meet virtually all architectural requirements.

The 3030 Series is UL and ULC listed with regular arm for self-closing doors. Tested and certified under ANSI Standard A156.4, grade one.

- Standard 3030 series closer shipped with regular arm and wood and machine screw pack. See 3030 Series page 19 for options.
- Sized cylinders for interior doors to 4'0".
- Handed for right or left swinging doors.
- Closers to meet ADA requirements. See 3030 Series page 20 .
- Standard or optional custom powder coat finish.
- Optional plated finish on arm and fasteners.
- Optional SRI primer for installations in corrosive conditions.
- Consult factory for installations with pivots.

CONCEALED MOUNTING			FINISH		CYLINDER				ARM		*ARM FUNCTION		
IN FRAME	IN 1 3/4" TUBE	IN DOOR	POWDER COAT	PLATED	HANDED	SIZED	ACCESSIBILITY	DELAYED ACTION	CONCEALED	EXPOSED	STANDARD (SINGLE)	REGULAR (DOUBLE)	HOLD-OPEN
○	○	●	●	●	●	●	♿	○	○	●	○	180°	140°

● *Available*
○ *Not available*

♿ *Closer available with less than 5.0 lbs. opening force on 36" door.*
**Maximum opening/hold-open point with standard template. See individual closer series for degrees of opening per installation.*

LCN CLOSERS
121 W. RAILROAD AVE.
P.O. BOX 100
PRINCETON, IL, USA 61356-0100

PHONE 800-526-2400
FAX 800-248-1460
www.lcnclosers.com
3/04

LCN 3030 SERIES

MOUNTING DETAILS

CONCEALED MOUNTING

For interior doors.
Single acting cylinder in top rail of door.
Exposed arm on hinge side of door.

MAXIMUM OPENING

Can be templated for
110°,
Ⓐ = 3 5/8" (92 mm)
Ⓑ = 10 1/4" (260 mm)
130°,
Ⓐ = 2 5/8" (67 mm)
Ⓑ = 9 1/4" (235 mm)
or 180°,
Ⓐ = 1 5/8" (41 mm)
Ⓑ = 8 1/4" (210 mm)
trim permitting.

Hold-open points up to maximum opening or 140°, whichever is less, with hold-open arm.

Arm clearance above door
Ⓒ = 1 1/4" (32 mm) minimum.

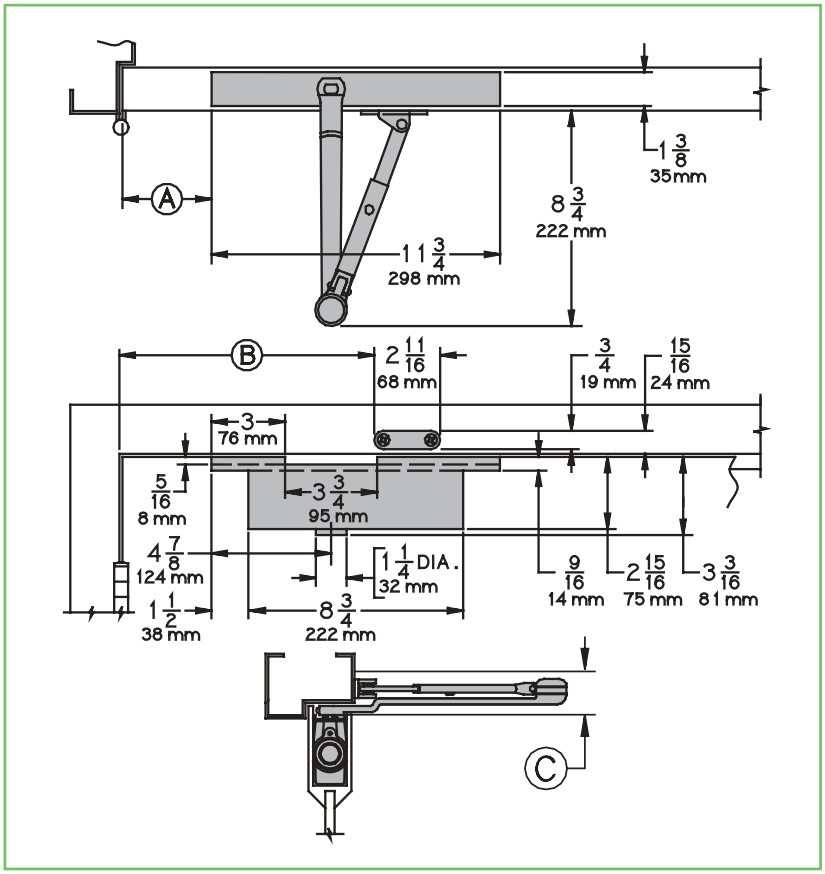

- **Butt Hinges** should not exceed 5" (127 mm) in width.
- **Auxiliary Stop** is recommended at hold-open point or where a door cannot swing 180°.
- **Top Rail** minimum 4" (102 mm) required.
- **Door Thickness** 1 3/4" (44 mm) minimum. Please consult the door manufacturer to assure that the door integrity and warranty is maintained after installing the 3030 Series door closer in a 1 3/4" thick wood door.

OPTIONS

- Hold-open arm.
- Consult factory for installations with pivots.

SPECIAL TEMPLATES

Customized installation templates or products may be available to solve unusual applications. Contact LCN for assistance.

LCN CLOSERS
121 W. RAILROAD AVE.
P.O. BOX 100
PRINCETON, IL, USA 61356-0100

PHONE 800-526-2400
FAX 800-248-1460
www.lcnclosers.com

3/04

CYLINDERS

CYLINDER, 3030-3071

Standard, handed, cast iron cylinder assembly with mounting plate. For various applications see "Table of Sizes" on 3030 Series page 20.

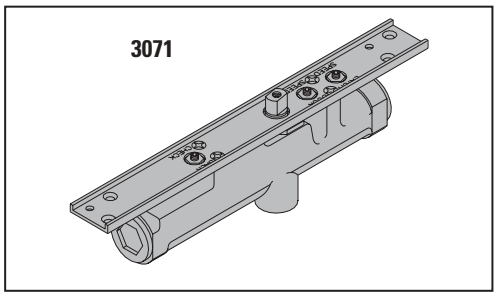

ARMS

REGULAR ARM, 3030-3077

Non-handed arm.

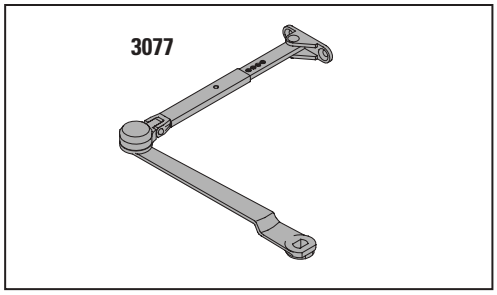

HOLD-OPEN ARM, 3030-3049

Optional, handed arm provides hold-open function, adjustable at elbow.

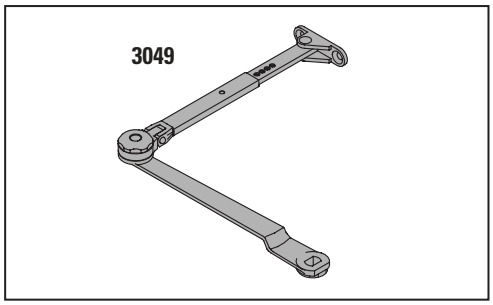

INSTALLATION ACCESSORIES

SOFFIT SHOE, 1370-65

Adapts hinge side shoe to rounded or bull nose trim.

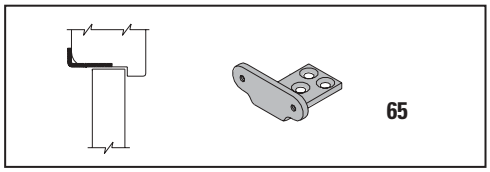

LCN CLOSERS
121 W. RAILROAD AVE.
P.O. BOX 100
PRINCETON, IL, USA 61356-0100

PHONE 800-526-2400
FAX 800-248-1460
www.lcnclosers.com
3/04

LCN 3030 SERIES

ORDERING INFORMATION

TABLE OF SIZES

Select closer based on width of door.
3030 Series cylinders available in size 1, 2, 3, or 4.
Closing power of all 3030 Series closers may be increased 15%.

→ Indicates recommended range of door width for closer size.

INTERIOR DOOR WIDTH

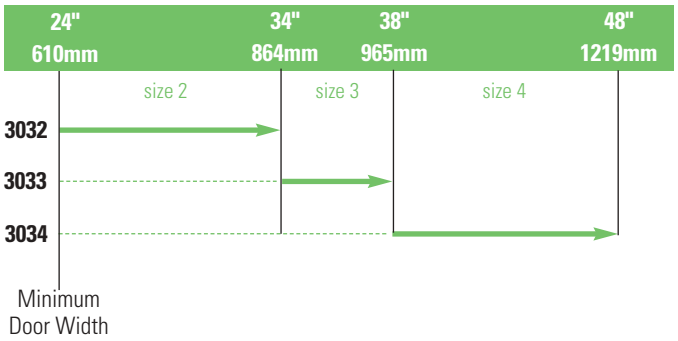

HOW-TO-ORDER 3030 SERIES CLOSERS

1. SELECT CYLINDER SIZE

☐ 3031 (ADA)
☐ 3032
☐ 3033
☐ 3034

2. SPECIFY HAND

☐ RH
☐ LH

3. SPECIFY FINISH

☐ Standard Powder Coat _____
Aluminum, Dark Bronze , Tan, Statuary, Light Bronze, Black, Brass.

Closer will be shipped with:
- REGULAR ARM,
- WOOD and MACHINE SCREW PACK, unless options listed below are selected.

CLOSER OPTIONS

ARM

☐ Hold-Open (H)

FINISHES

☐ Custom Powder Coat (RAL)_____
☐ Plated Finish, US _____
☐ SRI primer

SCREW PACK

☐ TORX Machine Screw (TORX)

SPECIAL TEMPLATE

☐ ST- _____

REDUCED OPENING FORCE 3030 CLOSERS

CAUTION ! Any manual door closer, including those certified by BHMA to conform to ANSI Standard A156.4, that is selected, installed and adjusted based on ADA or other reduced opening force requirements may not provide sufficient power to reliably close and latch a door.

Refer to POWER OPERATORS section for information on systems that meet reduced opening force requirements without affecting closing power.

	DOOR WIDTH	36"	42"	48"
♿	8.5* lbs.	N/A	N/A	N/A
	5.0* lbs.	3031	3031	3032

** Maximum opening force*

LCN CLOSERS
121 W. RAILROAD AVE.
P.O. BOX 100
PRINCETON, IL, USA 61356-0100

PHONE 800-526-2400
FAX 800-248-1460
www.lcnclosers.com

3/04