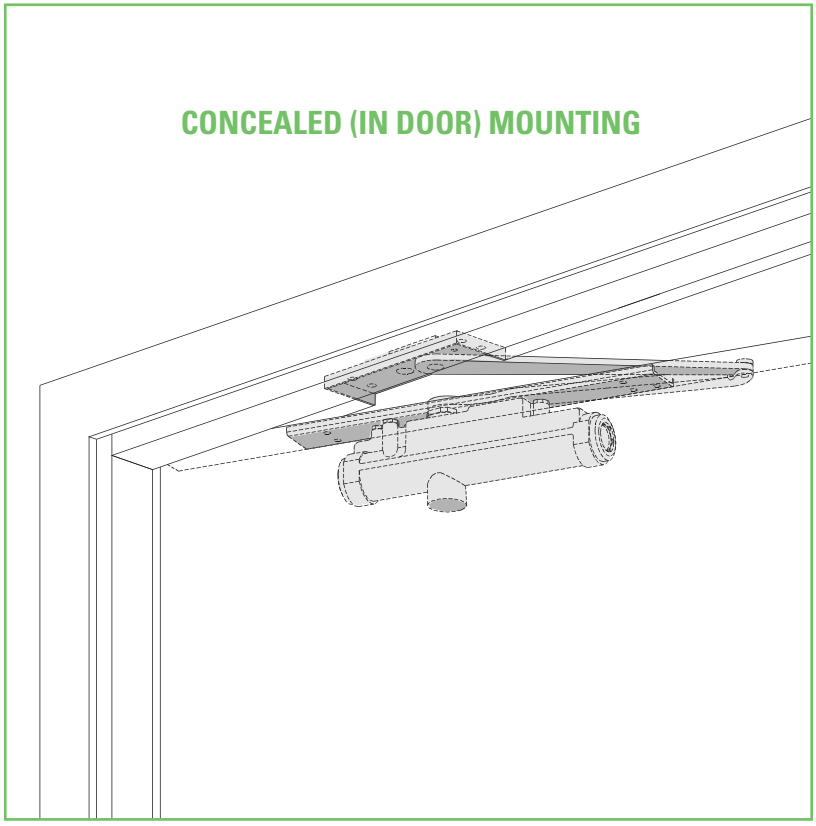

The concealed 330 is designed to mount in a 1 3/4" interior door. The double lever arm provides superior door control and the choice of finishes and arm functions meet virtually all architectural requirements.

The 330 Series is UL and ULC listed with regular arm for self-closing doors. Tested and certified under ANSI Standard A156.4, grade one.

- Standard 330 series closer shipped with regular arm and wood and machine screw pack. See 330 Series page 5 for options.
- Sized cylinders for interior doors to 4'0".
- Handed for right or left swinging doors.
- Closer meets ADA requirements. See 330 Series page 6.
- Standard or optional custom powder coat finish.
- Optional plated finish on arm and fasteners.
- Optional SRI primer for installations in corrosive conditions.
- Consult factory for installations with pivots.

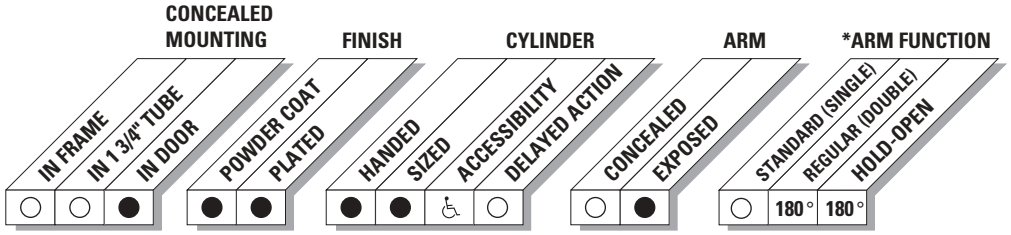

● *Available*
○ *Not available*

♿ *Closer available with less than 5.0 lbs. opening force on 36" door.*
**Maximum opening/hold-open point with standard template. See individual closer series for degrees of opening per installation.*

LCN CLOSERS
121 W. RAILROAD AVE.
P.O. BOX 100
PRINCETON, IL, USA 61356-0100

PHONE 800-526-2400
FAX 800-248-1460
www.lcnclosers.com
3/04

LCN 330 SERIES

MOUNTING DETAILS

CONCEALED MOUNTING

For interior doors.
Single acting cylinder in top rail of door.
Exposed arm with soffit plate on hinge side of door.

MAXIMUM OPENING

Can be templated for
110°,
Ⓐ = 3 5/8" (92 mm)
Ⓑ = 7 5/8" (194 mm)
130°,
Ⓐ = 2 5/8" (67 mm)
Ⓑ = 6 5/8" (168 mm)
or 180°,
Ⓐ = 1 5/8" (41 mm)
Ⓑ = 5 5/8" (143 mm)
trim permitting.

Hold-open points up to maximum opening with hold-open arms.

Arm clearance above door.
Regular and H180 hold-open arm require Ⓒ = 3/4" (19 mm).
Hold-open arm requires Ⓒ = 1 1/4" (32 mm).

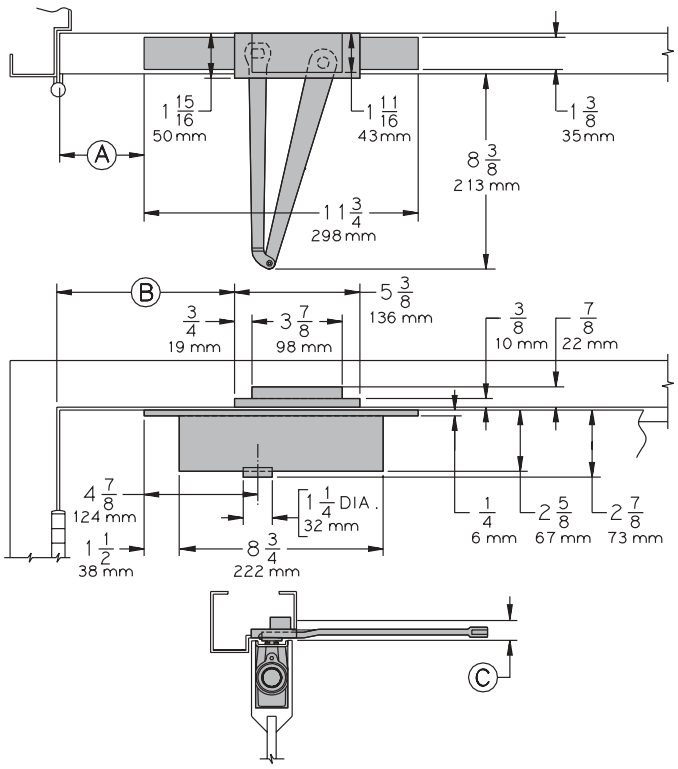

- **Butt Hinges** should not exceed 5" (127 mm) in width.
- **Auxiliary Stop** is recommended at hold-open point or where a door cannot swing 180°.
- **Top Rail** minimum 4" (102 mm) required.
- **Door Thickness** 1 3/4" (44 mm) minimum. Please consult the door manufacturer to assure that the door integrity and warranty is maintained after installing the 330 Series door closer in a 1 3/4" thick wood door.
- **Soffit Shoe** mortised into head frame.

Options

- Hold-open or H180 hold-open arm.
- Consult factory for installations with pivots.

Special Templates

Customized installation templates or products may be available to solve unusual applications. Contact LCN for assistance.

LCN CLOSERS
121 W. RAILROAD AVE.
P.O. BOX 100
PRINCETON, IL, USA 61356-0100

PHONE 800-526-2400
FAX 800-248-1460
www.lcnclosers.com

3/04

CYLINDERS

CYLINDER, 330-3071

Standard, handed, cast iron cylinder assembly with mounting plate. For various applications see "Table of Sizes" on 330 Series page 6.

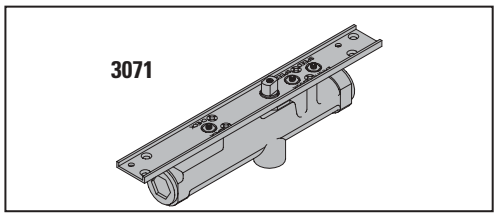

ARMS

REGULAR ARM, 330-3077

Handed arm.

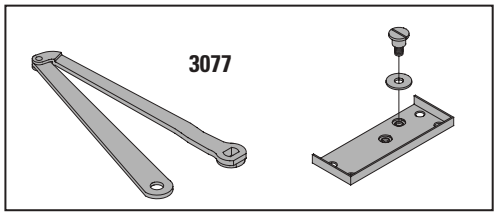

HOLD-OPEN ARM, 330-3049

Optional, handed arm provides hold-open function for 100° and 130° template, adjustable at elbow.

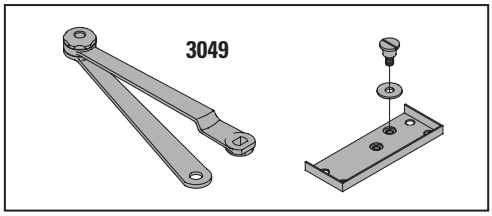

HOLD-OPEN H180 ARM, 330-3049H180

Optional, handed arm provides hold-open function for 180° template, adjustable at soffit shoe.

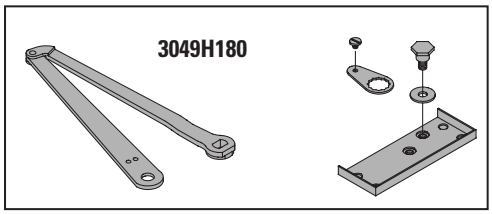

LCN CLOSERS
121 W. RAILROAD AVE.
P.O. BOX 100
PRINCETON, IL, USA 61356-0100

PHONE 800-526-2400
FAX 800-248-1460
www.lcnclosers.com
3/04

LCN 330 SERIES

MOUNTING DETAILS

TABLE OF SIZES

Select closer based on width of door.
Series cylinders available in size 1, 2, 3, or 4.

→ Indicates recommended range of door width for closer size.

INTERIOR DOOR WIDTH

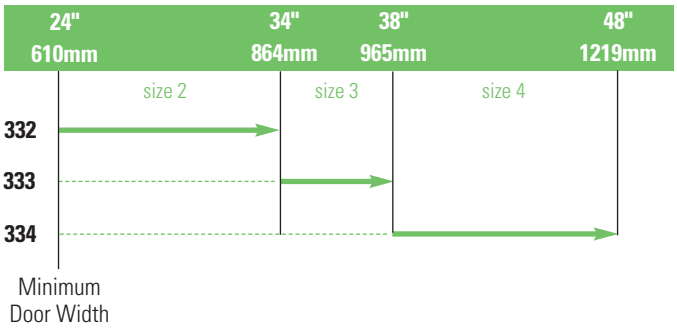

HOW-TO-ORDER 330 SERIES CLOSERS

1. SELECT CYLINDER SIZE

☐ 331 (ADA)
☐ 332
☐ 333
☐ 334

2. SPECIFY HAND

☐ RH
☐ LH

3. SPECIFY FINISH

☐ Standard Powder Coat _____
Aluminum, Dark Bronze , Tan, Statuary, Light Bronze, Black, Brass.

Closer will be shipped with:
- REGULAR ARM,
- WOOD and MACHINE SCREW PACK, unless options listed below are selected.

CLOSER OPTIONS

ARM

☐ Hold-Open (H)
☐ H180 Hold-Open ((H180)

FINISH

☐ Custom Powder Coat (RAL) _____
☐ Plated Finish, US _____
☐ SRI primer

SCREW PACK

☐ TORX Machine Screw (TORX)

SPECIAL TEMPLATE

☐ ST- _____

REDUCED OPENING FORCE 330 CLOSERS

CAUTION ! Any manual door closer, including those certified by BHMA to conform to ANSI Standard A156.4, that is selected, installed and adjusted based on ADA or other reduced opening force requirements may not provide sufficient power to reliably close and latch a door.

Refer to POWER OPERATORS section for information on systems that meet reduced opening force requirements without affecting closing power.

	DOOR WIDTH	36"	42"	48"
♿	8.5* lbs.	N/A	N/A	N/A
	5.0* lbs.	331	331	332

** Maximum opening force*

LCN CLOSERS
121 W. RAILROAD AVE.
P.O. BOX 100
PRINCETON, IL, USA 61356-0100

PHONE 800-526-2400
FAX 800-248-1460
www.lcnclosers.com

3/04