FEATURES

HINGE (PULL) SIDE MOUNTING

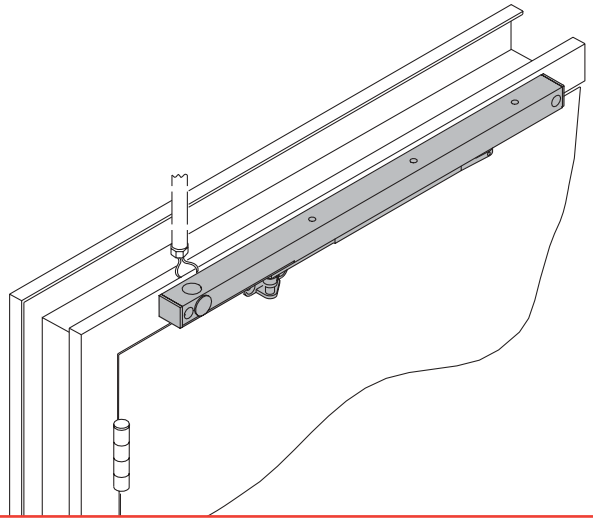

The SEH SENTRONIC® is a holder designed to provide single point hold-open for fire and smoke barrier doors that must be used with a opposite side mounted UL listed door closer. The door is held open until current interruption releases the holding mechanism and the door closes. Single lever (track) arm is specifically designed for interior doors. Choice of finishes, track functions, and installation accessories meet virtually all life safety requirements.

- Standard SEH series is a door holder that must be installed in conjunction with a opposite side mounted, UL listed door closer.
- Standard SEH series holder shipped with a standard arm, 24V or 120V (please specify) SEH track and wood and machine screw pack.
- Hold-open force is adjustable.
- Momentary on/off switch board assembly for testing door release also provides over-voltage protection. Field replaceable.
- Non-handed for mounting on either right or left hand door.
- Concealed or surface wiring.
- Interfaces with alarm systems. Consult factory for full details.
- Standard or optional custom powder coated finishes on track and arm.
- A good application is a CUSH-N-STOP closer mounted on the push side and the SEH mounted on the pull side of the door.

The SEH Series is UL listed for smoke barrier or labeled fire doors. ULC listed for self-closing doors without hold-open. Tested and certified under ANSI Standard A156.15. Conforms to life safety code, NFPA 101.

MOUNTING					FINISH		COVER		**CYLINDER						*ARM FUNCTION			
HINGE (PULL) SIDE	TOP JAMB (PUSH)	STOP FACE (PUSH)	CONCEALED (FRAME)	CONCEALED (DOOR)	POWDER COAT	PLATED	PLASTIC	METAL	HANDED	NON-SIZED	SIZED	SINGLE POINT HOLD-OPEN	MULTI-POINT HOLD-OPEN	BYPASS 80/140	STANDARD (SINGLE)	REGULAR (DOUBLE)	SWING FREE	DOUBLE EGRESS
●	○	●	○	○	●	○	○	○	○	○	○	○	○	○	100°	○	○	○

● *Available*
○ *Not available*

** Maximum hold-open with standard template. See individual closer series for degrees of opening and hold-open per installation.*
*** Cylinder sold separately*

LCN CLOSERS
121 W. RAILROAD AVE.
P.O. BOX 100
PRINCETON, IL, USA 61356-0100

PHONE 800-526-2400
FAX 800-248-1460
www.lcnclosers.com
3/04

LCN SEH SERIES

HINGE (PULL) SIDE & STOP FACE (PUSH SIDE) MOUNTINGS

Information applies to SEH unless otherwise specified.

MAXIMUM OPENING

Templating allows 100°.

Hold-open points between 80° and 100° in approximately 3° increments.

SEH ELECTRICAL OPTIONS

These track assemblies require a single power circuit for the holding solenoid.

SEH holding solenoid is either 24V or 120V input, please specify.
An optional 4040SE-3210 TRANSFORMER reduces 120V AC line voltage to 24V AC.
Circuitry accepts either AC or DC input.

Options

- 24V or 120V input for SEH, please specify.

Special Templates
Customized installation templates or products may be available to solve unusual applications. Contact LCN for assistance.

HINGE (PULL) SIDE MOUNT

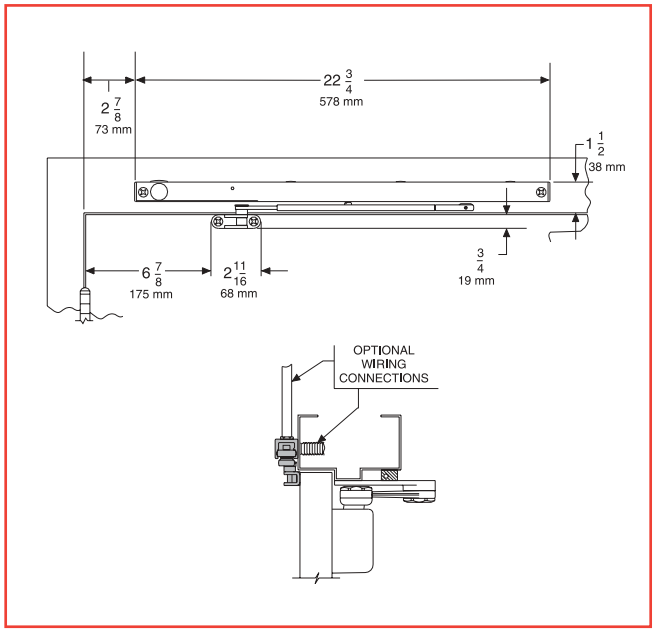

STOP FACE (PUSH SIDE) MOUNT

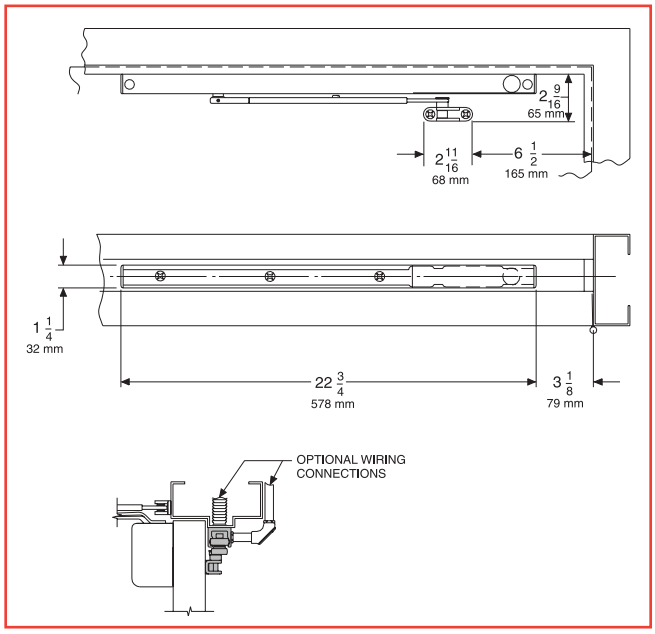

- **Butt Hinges** should not exceed 5" (127 mm) in width.
- **Swing Clear Hinges** consult factory.
- **Auxiliary Stop** is recommended at hold-open point.
- **Reveal** should not exceed 1/8" (3 mm) for standard arm.
- **Head Frame** requires 2" (51 mm) minimum.
- **Stop Width** 1 1/4" (32 mm) minimum.
- **Flush Ceiling** with 2" (51 mm) head frame does not require special templating.
- **Door Width** 2'4" (711 mm) minimum for single door with SEH.
  4'8" (1422 mm) minimum for paired doors with SEH.
- **Wiring Diagram** See "FIRE/LIFE SAFETY" section page 13 for typical wiring and electrical diagram.

LCN CLOSERS
121 W. RAILROAD AVE.
P.O. BOX 100
PRINCETON, IL, USA 61356-0100

PHONE 800-526-2400
FAX 800-248-1460
www.lcnclosers.com
3/04

ARMS

HOLDER ARM, SEH-3077T

Non-handed arm can be combined with any 4040SE series track to provide an electrically controlled hold-open function on either side of the door. All SEH type holders require a separate closer for fire or smoke barrier door applications.

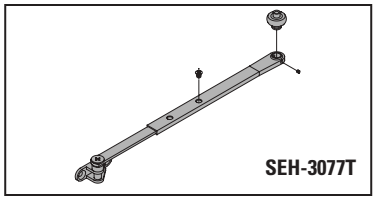

TRACKS

SE TRACK, SEH-3038

Standard, non-handed track for SEH. Mounts on either head frame or stop. 24V or 120V AC/DC input for holding solenoid, please specify. Includes test switch assembly with fuse.

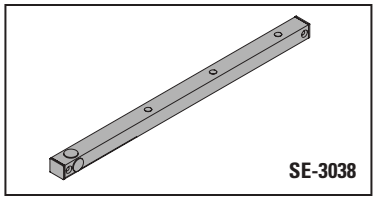

SWITCH

TEST SWITCH, SEH-3436

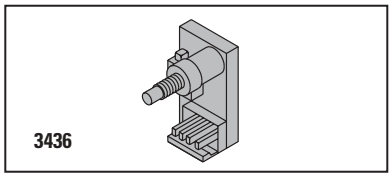

INSTALLATION ACCESSORIES

CONDUIT QUICK-CONNECTOR, SEH-81

Two piece connector for use with 1/2" conduit.

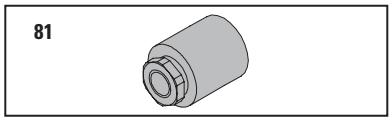

TRACK ROLLER, SEH-3034

Quiet, low friction roller assembly.
Shoulder dimension "X" = 1/4" (6 mm).

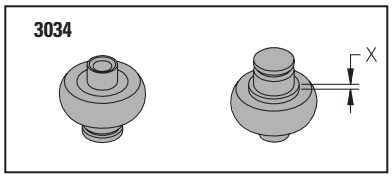

TRACK SLIDER, SEH-168

Alloy metal slider for use in SE series tracks only.

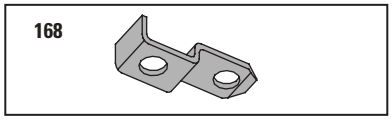

TRANSFORMER, 4040SE-3210

Reduces line voltage from 120V to 24V AC.
Mounted on cover for 4" (102 mm) x 4" x 2 1/8" (54 mm) junction box (by others).

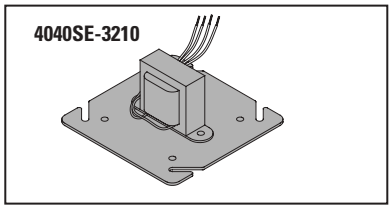

LCN CLOSERS
121 W. RAILROAD AVE.
P.O. BOX 100
PRINCETON, IL, USA 61356-0100

PHONE 800-526-2400
FAX 800-248-1460
www.lcnclosers.com
3/04

HOW-TO-ORDER SEH SERIES

1. VOLTAGE

☐ 24V AC/DC

☐ 120V AC/DC

2. SPECIFY FINISH.

☐ Standard Powder Coat _____
Aluminum, Dark Bronze , Tan, Statuary, Light Bronze, Black, Brass.

Closer will be shipped with;

- *STANDARD ARM,*
- *STANDARD TRACK,*
- *WOOD & MACHINE SCREW PACK,*

unless options listed below are selected.

CLOSER OPTIONS

FINISHES

☐ Custom Powder Coat (RAL) _____
(handed metal cover required)

SCREW PACK

☐ TB*, Wood & Machine Screw (TBWMS)

☐ TORX Machine Screw (TORX)

☐ TB* & TORX Machine Screw (TBTRX)
* Specify door thickness if other than 1 3/4".

INSTALLATION ACCESSORIES

☐ Transformer, 4040SE-3210

SPECIAL TEMPLATE

☐ ST- _____ (if required)

LCN CLOSERS
121 W. RAILROAD AVE.
P.O. BOX 100
PRINCETON, IL, USA 61356-0100

PHONE 800-526-2400
FAX 800-248-1460
www.lcnclosers.com
3/04