FEATURES

HINGE (PULL) SIDE MOUNTING

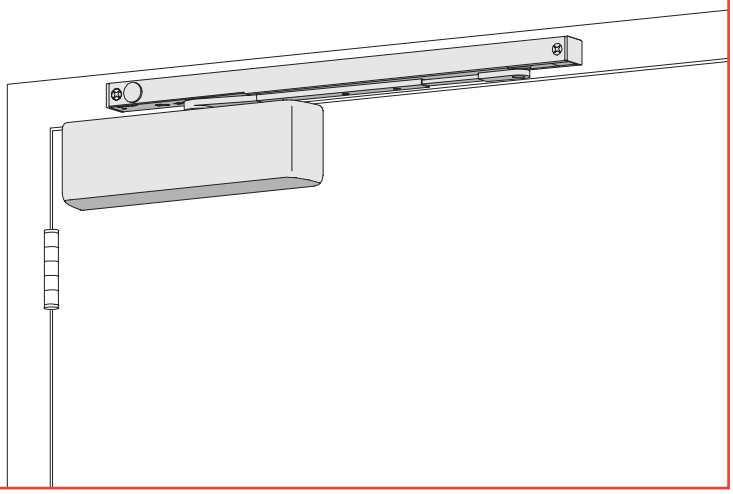

The 4040SE SENTRONIC® is a heavy duty, non-handed, non-sized closer/holder designed to provide single point hold-open for fire and smoke barrier doors. The door is held open until current interruption releases the holding mechanism and the door closes. Single lever (track) arm closer is specifically designed for interior doors. Choice of finishes, track functions, and installation accessories meet virtually all life safety requirements.

- Standard 4040SE series closer shipped with a standard arm, 24V or 120V (please specify) SE track, standard cover, and wood and machine screw pack. SEL tracks are optional, see 4040SE Series pages 14 & 15 for options.
- Non-sized cylinders for interior doors to 4'0".
- Hold-open force is adjustable.
- Momentary on/off switch board assembly for testing door release also provides over-voltage protection. Field replaceable.
- Functions as a full rack and pinion closer when hold-open is not engaged or current is interrupted.
- Closer mounts on either push or pull side of the door.
- Non-handed for mounting on either right or left hand door.
- Concealed or surface wiring.
- Interfaces with alarm systems. Consult factory for full details.
- Standard or optional custom powder coated finishes on cover and arm.
- Optional plated finishes.

The 4040SE and SEL Series is UL listed for smoke barrier or labeled fire doors. ULC listed for self-closing doors without hold-open. Tested and certified under ANSI Standard A156.15. Conforms to life safety code, NFPA 101.

MOUNTING					FINISH		COVER		CYLINDER				*ARM FUNCTION			
HINGE (PULL) SIDE	TOP JAMB (PUSH)	STOP FACE (PUSH)	CONCEALED (FRAME)	CONCEALED (DOOR)	POWDER COAT	PLATED	PLASTIC	METAL	HANDED	NON-SIZED	SIZED	SINGLEPOINT HOLD-OPEN	MULTI-POINT HOLD-OPEN	BYPASS 80/140	STANDARD (SINGLE)	REGULAR (DOUBLE)	SWING FREE	DOUBLE EGRESS
●	○	●	○	○	●	●	●	●	○	●	○	●	○	○	110°	○	○	95°

● *Available*
○ *Not available*

** Maximum hold-open with standard template. See individual closer series for degrees of opening and hold-open per installation.*

LCN CLOSERS
121 W. RAILROAD AVE.
P.O. BOX 100
PRINCETON, IL, USA 61356-0100

PHONE 800-526-2400
FAX 800-248-1460
www.lcnclosers.com
3/04

LCN 4040SE SERIES

MOUNTING DETAILS

HINGE (PULL) SIDE MOUNTING

Information applies to 4040 SE unless otherwise specified.

MAXIMUM OPENING

Templating allows 110°.

Hold-open points between 85° and 110° in approximately 3° increments.

Pull side mounting on a double egress frame requires a handed double egress arm.
Maximum hold-open to 95°.
2 11/16" (67 mm) maximum reveal on pull side.

SEL track provides hold-open points between 90° and 120°, in approximately 3° increments.

SE, SEL ELECTRICAL OPTIONS

These track assemblies require a single power circuit for the holding solenoid.

SE or SEL holding solenoid is either 24V or 120V input, please specify.
An optional 4040SE-3210 TRANSFORMER reduces 120V AC line voltage to 24V AC.
Circuitry accepts either AC or DC input.

Options

- Long (SEL) track.
- Handed double egress arm for reveal under 2 11/16" (67 mm).
- Metal or Lead Lined cover.
- 24V or 120V input for SE or SEL, please specify.

Special Templates
Customized installation templates or products may be available to solve unusual applications. Contact LCN for assistance.

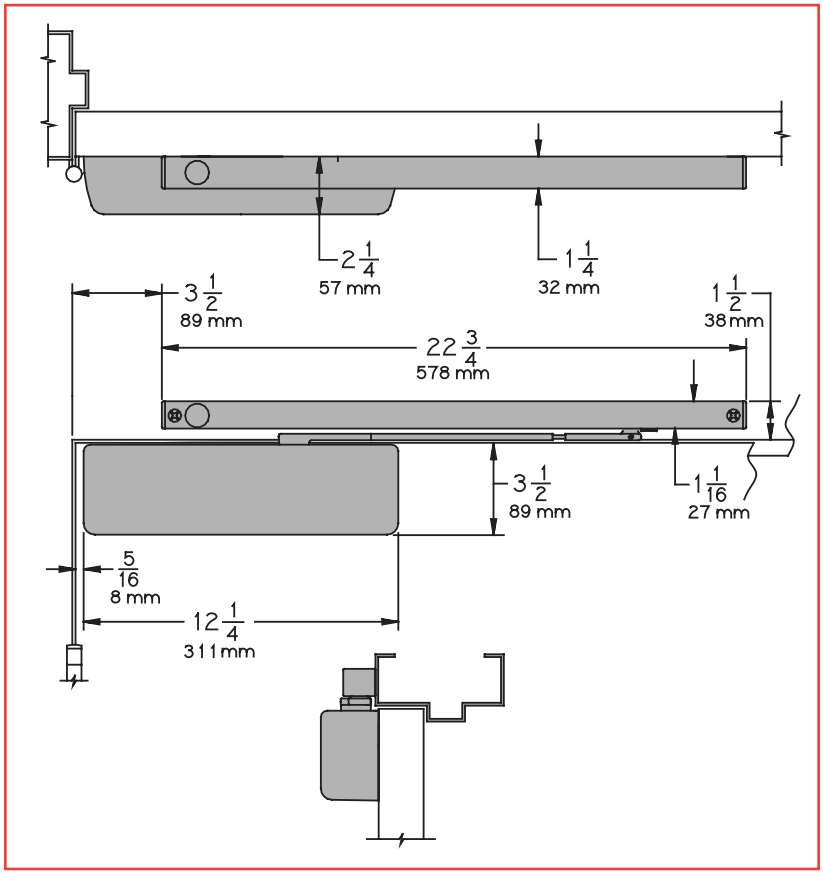

- **Butt Hinges** should not exceed 5" (127 mm) in width.
- **Swing Clear Hinges** consult factory.
- **Auxiliary Stop** is recommended at hold-open point.
- **Reveal** should not exceed 1/8" (3 mm) for standard arm. Should not exceed 2 11/16" (68 mm) for double egress arm.
- **Top Rail** minimum 3 1/2" (89 mm).
  Installation with PLATE, 4040SE-18 requires SPECIAL TEMPLATE and 1 3/4" (44 mm) minimum top rail.
- **Head Frame** requires 2" (51 mm) minimum.
- **Flush Ceiling** with 2" (51 mm) head frame does not require special templating.
- **Door Width** 2'4" (711 mm) minimum for single door with SE.
  4'8" (1422 mm) minimum for paired doors with SE.
- **Clearance** of 2 3/8" (60 mm) behind door required for 90° installation.
- **Wiring Diagram** See "FIRE/LIFE SAFETY" section page 13 for typical wiring and electrical diagram.

LCN CLOSERS
121 W. RAILROAD AVE.
P.O. BOX 100
PRINCETON, IL, USA 61356-0100

PHONE 800-526-2400
FAX 800-248-1460
www.lcnclosers.com

3/04

LCN 4040SE SERIES

STOP FACE (PUSH SIDE) MOUNTING

Information applies to 4040 SE closers unless otherwise specified.

MAXIMUM OPENING

Templating allows 110°.

Hold-open points between 85° and 110° in approximately 3° increments.

SEL track provides hold-open points between 90° and 120°, in approximately 3° increments.

SE, SEL ELECTRICAL OPTIONS

These track assemblies require a single power circuit for the holding solenoid.
SE or SEL holding solenoid is either 24V or 120V input, please specify.
An optional 4040SE-3210 TRANSFORMER reduces 120V AC line voltage to 24V AC.
Circuitry accepts either AC or DC input.

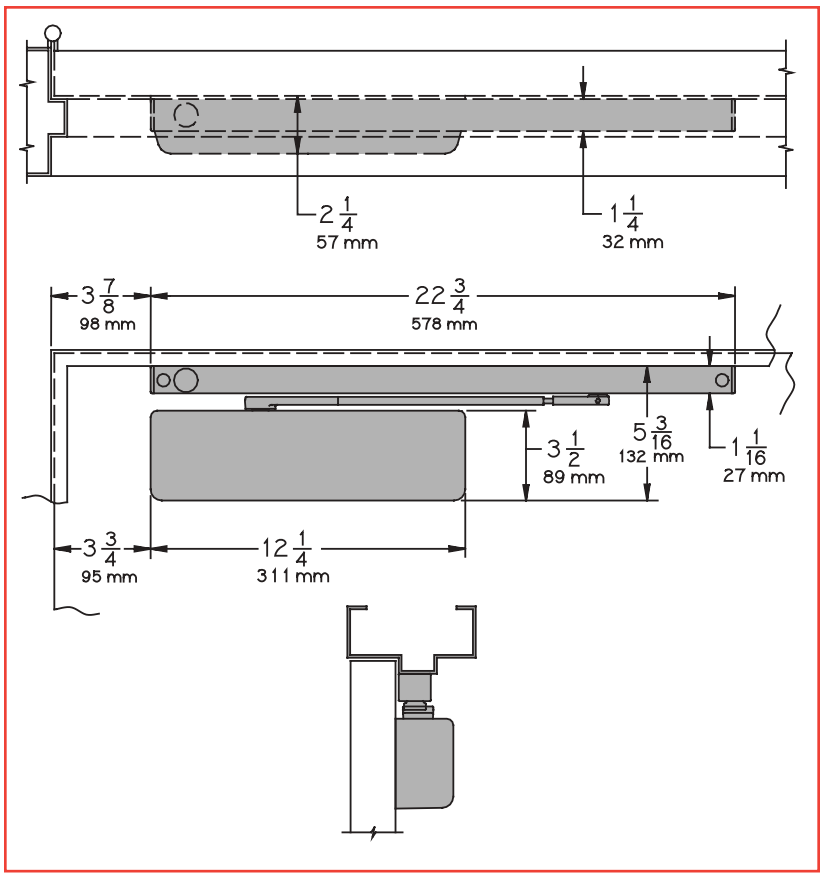

- **Butt Hinges** should not exceed 5" (127 mm) in width.
- **Auxiliary Stop** is recommended at hold-open point.
- **Top Rail** minimum 5 3/4" (146 mm).
  Installation with PLATE, 4040SE-18PA requires SPECIAL TEMPLATE and 2" (51 mm) minimum top rail.
- **Stop Width** 1 1/4" (32 mm) minimum.
- **Door Width** 2'4" (711 mm) minimum for single door with SE.
  4'8" (1422 mm) minimum for paired doors with SE.
- **Wiring Diagram**

Options

- Long (SEL) track.
- Metal or lead lined cover.
- 24V or 120V input for SE or SEL, please specify.

Special Templates

Customized installation templates or products may be available to solve unusual applications. Contact LCN for assistance.

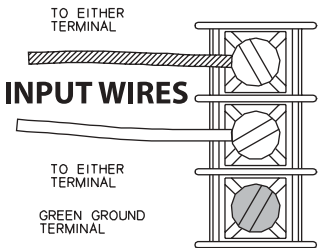

SE WIRING DIAGRAM

LCN CLOSERS
121 W. RAILROAD AVE.
P.O. BOX 100
PRINCETON, IL, USA 61356-0100

PHONE 800-526-2400
FAX 800-248-1460
www.lcnclosers.com

3/04

LCN 4040SE SERIES

ACCESSORIES

CYLINDER

CYLINDER, 4040SE-3071

Standard, handed cast iron cylinder assembly.

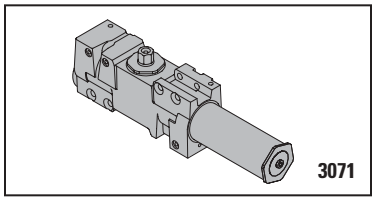

COVERS

COVER, 4040SE-72

Standard, non-handed plastic cover.

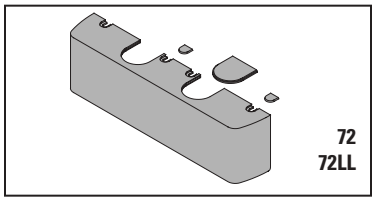

LEAD LINED COVER, 4040SE-72LL

Optional, non-handed cover.

METAL COVER, 4040SE-72MC

Optional, handed cover. Required for plated finishes and custom powder coat finishes.

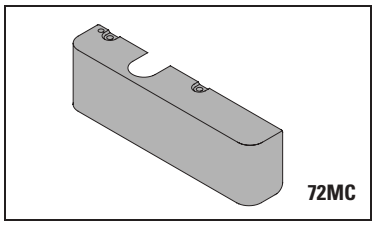

ARMS

STANDARD ARM, 4040SE-3077T

Non-handed arm, adjustable to select hold-open point.

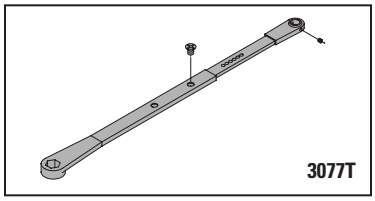

DOUBLE EGRESS ARM, 4040SE-3077DE

Optional, handed arm for pull side installations on double egress doors and frames. Not required for push side mounting on double egress frames.

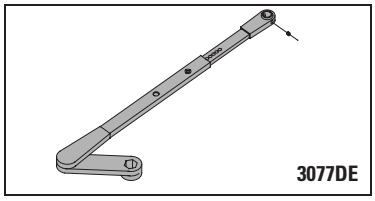

TRACKS

SE TRACK, 4040SE-3038

Standard, non-handed track for SE closers. Mounts on either head frame or stop. 24V or 120V AC/DC input for holding solenoid, please specify. Includes test switch assembly with fuse.

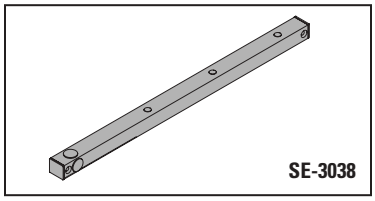

SEL TRACK, 4040SEL-3038

Optional, non-handed long track mounts on either head frame or stop. 24V or 120V AC/DC input standard for holding solenoid, please specify. Includes test switch assembly with fuse.

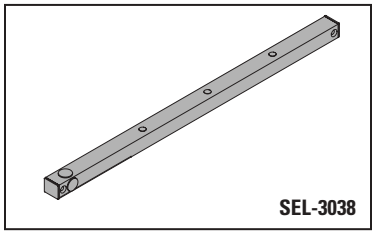

LCN CLOSERS
121 W. RAILROAD AVE.
P.O. BOX 100
PRINCETON, IL, USA 61356-0100

PHONE 800-526-2400
FAX 800-248-1460
www.lcnclosers.com
3/04

SWITCH

TEST SWITCH, 4040SE-3436

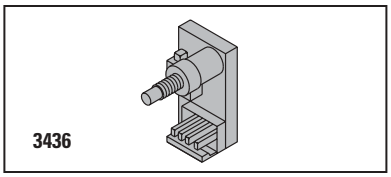

INSTALLATION ACCESSORIES

PLATE, 4040SE-18

Required where top rail is less than 3 1/2" (89 mm).
Plate requires minimum 2" (51 mm) top rail.
Plate installations require a SPECIAL TEMPLATE.

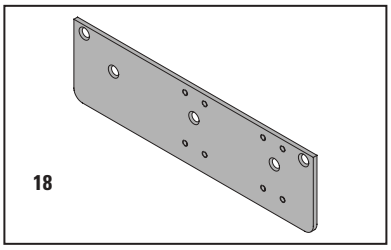

PLATE, 4040SE-18PA

Required where top rail is less than 5 3/4" (146 mm).
Plate requires minimum 2" (51 mm) top rail.
Plate installations require a SPECIAL TEMPLATE.

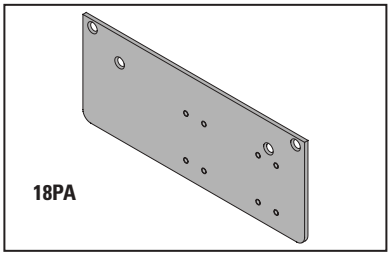

CONDUIT QUICK-CONNECTOR, 4040SE-81

Two piece connector for use with 1/2" conduit.

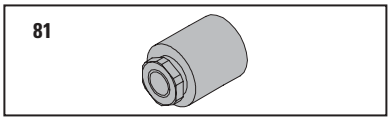

TRACK ROLLER, 4040SE-3034

Quiet, low friction roller assembly.
Shoulder dimension "X" = 1/8" (3 mm).

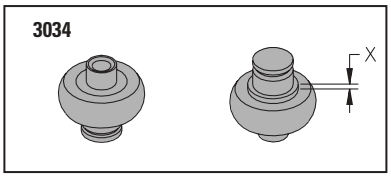

TRACK SLIDER, 4040SE-168

Alloy metal slider for use in SE series tracks only.

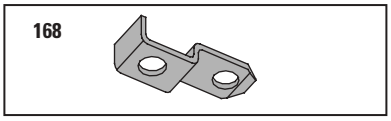

TRANSFORMER, 4040SE-3210

Reduces line voltage from 120V to 24V AC.
Mounted on cover for 4" (102 mm) x 4" x 2 1/8" (54 mm) junction box (by others).

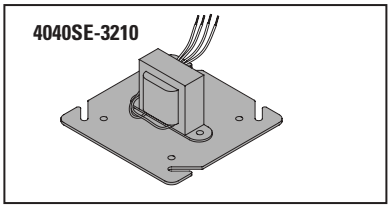

LCN CLOSERS
121 W. RAILROAD AVE.
P.O. BOX 100
PRINCETON, IL, USA 61356-0100

PHONE 800-526-2400
FAX 800-248-1460
www.lcnclosers.com
3/04

LCN 4040SE SERIES

ORDERING INFORMATION

TABLE OF SIZES

4040SE series cylinders accommodate interior doors up to 48" (1219 mm) wide.
Closing power of 4040SE Series closers is adjustable through a range of sizes up to size 4.

Minimum door widths:
for SE on paired door, min. width 60" (1524 mm).
for SE, minimum door width 28" (711 mm).
for SEL, minimum door width 30" (762 mm).
Details are listed on the MOUNTING DETAILS pages.

INTERIOR DOOR WIDTH

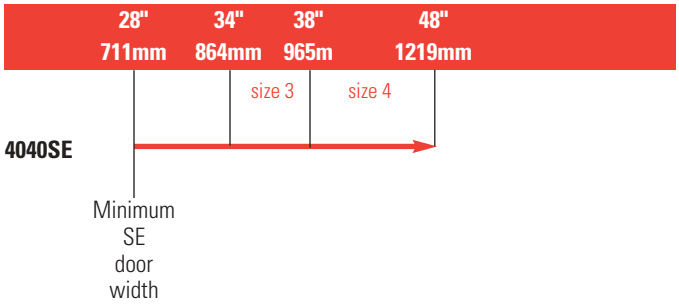

HOW-TO-ORDER 4040SE SERIES CLOSERS

1. SELECT TRACK

☐ SE
☐ SEL

2. VOLTAGE

☐ 24V AC/DC
☐ 120V AC/DC

3. SPECIFY FINISH.

☐ Standard Powder Coat _____
Aluminum, Dark Bronze , Tan, Statuary, Light Bronze, Black, Brass.

Closer will be shipped with;

- *STANDARD CYLINDER,*
- *STANDARD COVER,*
- *STANDARD ARM,*
- *STANDARD TRACK,*
- *WOOD & MACHINE SCREW PACK,*

unless options listed below are selected.

CLOSER OPTIONS

COVER

☐ Metal (MC)
(please specify right or left hand)
☐ Lead Lined (LL)

FINISHES

☐ Custom Powder Coat (RAL) _____
(handed metal cover required)
☐ Plated Finish, US _____
(handed metal cover required)

ARM

☐ Double Egress (DE)
(please specify right or left hand)

SCREW PACK

☐ TB*, Wood & Machine Screw (TBWMS)
☐ TORX Machine Screw (TORX)
☐ TB* & TORX Machine Screw (TBTRX)
* Specify door thickness if other than 1 3/4".

INSTALLATION ACCESSORIES

☐ Plate, 4040SE-18
☐ Plate 4040SE-18PA
☐ Transformer, 4040SE-3210

SPECIAL TEMPLATE

☐ ST- _____ (if required)

LCN CLOSERS
121 W. RAILROAD AVE.
P.O. BOX 100
PRINCETON, IL, USA 61356-0100
PHONE 800-526-2400
FAX 800-248-1460
www.lcnclosers.com
3/04