FEATURES

TOP JAMB (PUSH SIDE) MOUNT

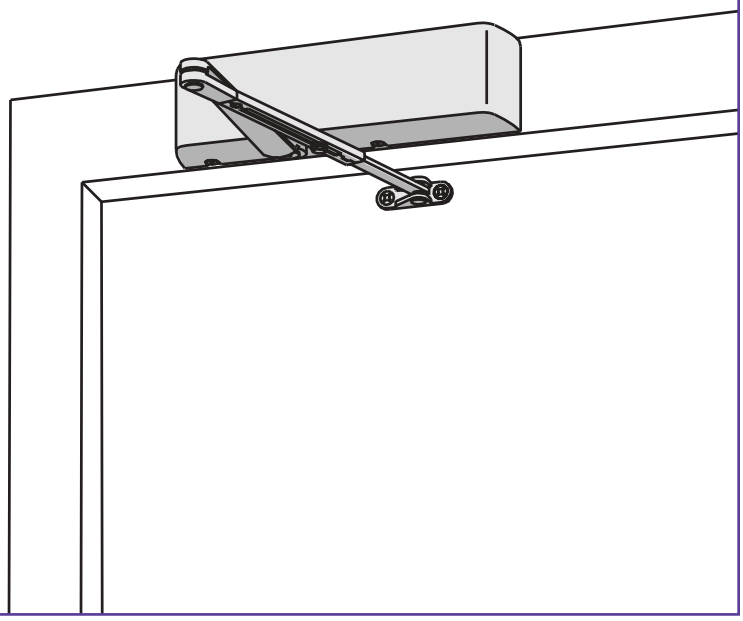

The 4020 SMOOTHEE® is LCN's best performing heavy duty closer designed specifically for institutional and other rugged high traffic applications.

- **Ten Million Cycles**
- **Cast Iron**
- **Forged Steel Main Arm**
- **Double Heat Treated Steel Pinion**
- **All Weather Fluid**
- **LCN® Fast™ Power Adjust**
- **Fast & Accurate Installation**
- **UL & ULC Listed**

- Standard 4020 series closer shipped with regular arm, standard plastic cover, and self reaming and tapping screws. See 4020 Series page 17 for options.
- Sized cylinders for interior doors to 5'0" and exterior doors to 4'0".
- Non-sized cylinder adjustable for interior doors to 4'6" and exterior doors to 3'6".
- Closer mounts top jamb (push side), specify right or left swinging door.
- 4021 cylinder meets ADA requirements. See 4020 Series page 18.
- Standard or optional custom powder coat finish.
- Optional plated finish on cover, arm and fasteners.
- Optional SRI primer for installations in corrosive conditions.
- The 4020 Series is UL and ULC listed with regular or fusible link arms for self-closing doors.
- Tested and certified under ANSI Standard A156.4, grade one.

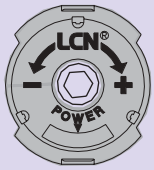

The 4021 includes the **LCN® FAST™ Power Adjust,** *a revolutionary visual indicator for Spring Power Adjustment.*

MOUNTING					FINISH		COVER			CYLINDER					**ARM FUNCTION						
HINGE (PULL) SIDE	TOP JAMB (PULL)	TOP JAMB (PUSH)	PARALLEL ARM	STOP FACE	POWDER COAT	PLATED	PLASTIC	METAL	DESIGNER METAL	NON-HANDED	NON-SIZED	ACCESSIBILITY	DELAYED ACTION	AVB***	REGULAR (DOUBLE)	STANDARD (SINGLE)	HOLD-OPEN	FUSIBLE LINK	EDA/HEDA	CUSH/HCUSH	SCUSH/SHCUSH
○	○	●	○	○	●	●	●	●	○	○	●	♿	●	○	180°	○	140°	140°	○	○	○

● *Available*
○ *Not available*

♿ *Closer available with less than 5.0 lbs. opening force on 36" door.*
***Maximum opening/hold-open point with standard template.*
**** Advanced Variable Backcheck*

LCN CLOSERS
121 W. RAILROAD AVE.
P.O. BOX 100
PRINCETON, IL, USA 61356-0100

PHONE 800-526-2400
FAX 800-248-1460
www.lcnclosers.com
3/04

TOP JAMB (PUSH SIDE) MOUNTING

MAXIMUM OPENING

Can be templated for
100°,
Ⓐ = 6" (152 mm)
Ⓑ = 12 3/8" (314 mm)
140°,
Ⓐ = 4" (102 mm)
Ⓑ = 10 3/8" (264 mm)
or 180°.
Ⓐ = 2" (51 mm)
Ⓑ = 8 3/8" (213 mm)

Hold-open points up to maximum opening or 140° , whichever is less, for hold-open or fusible link arm.

For hold-open beyond 140°, use 4110 Series closer.

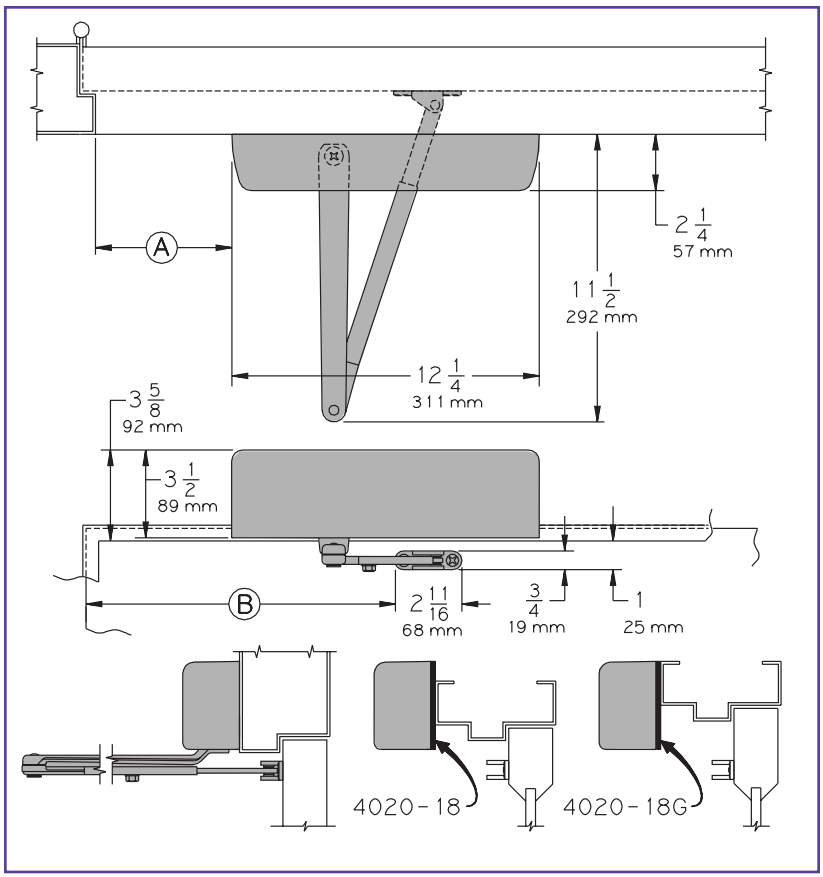

- **Butt Hinges** should not exceed 5" (127 mm) in width.
- **Auxiliary Stop** is recommended at hold-open point or where the door cannot swing 180°.
- **Reveal** of 2 9/16" (65 mm) allows 180° opening with regular arm .
  4 13/16" (122 mm) allows up to 140° opening.
  8" (203 mm) allows up to 140° opening with LONG ARM where standard rod and shoe is replaced with optional LONG ROD and SHOE (4020-79LR).
- **Head Frame** less than 3 7/16" (87 mm) requires PLATE, 4020-18
  Use PLATE, 4020-18G for flush ceiling condition.
  Either plate requires 1 3/4" (44 mm) minimum.
- **Top Rail** requires minimum 1 1/2" (38 mm).
  Closer on 4020-18 plate requires 2" (51 mm) minimum.
  Closer on 4020-18G plate requires 2 3/4" (70 mm) minimum.
- **Delayed Action** Add suffix "DEL" to selected cylinder (eg. 4024 DEL).
  Not available with 4026 cylinder.
  Delays closing from maximum opening to approximately 75°.
  Delay time adjustable up to approximately 1 minute.

Options

- Sized or non-sized cylinder.
- Delayed action cylinder.
- Hold-open, or fusible link arm.
- Metal or lead lined cover.

Special Templates

Customized installation templates or products may be available to solve unusual applications. Contact LCN for assistance.

LCN CLOSERS
121 W. RAILROAD AVE.
P.O. BOX 100
PRINCETON, IL, USA 61356-0100

PHONE 800-526-2400
FAX 800-248-1460
www.lcnclosers.com
3/04

CYLINDERS

CYLINDER, 4020-3071

Standard, handed cast iron cylinder assembly.

For various applications see "Table of Sizes" on 4020 Series page 18.

COVERS

COVER, 4020-72

Standard, handed plastic cover.

LEAD LINED COVER, 4020-72LL

Optional handed cover.

METAL COVER, 4020-72MC

Optional, handed cover. Required for plated finishes and custom powder coat finishes.

ARMS

REGULAR ARM, 4020-3077

Non-handed arm.

LONG ARM, 4020-3077L

Optional non-handed arm includes 4020-79LR for deep reveals.

HOLD-OPEN ARM, 4020-3049

Optional, handed arm provides hold-open function, adjustable at elbow. 5 3/4" (146 mm) maximum reveal, 140° hold open.

FUSIBLE LINK ARM, 4020-3049FL

Optional, handed arm releases hold-open function, adjustable at shoe, when exposed to temperatures above 165° F.

Optional links release at 135° F.

3 7/8" (98 mm) maximum reveal.

INSTALLATION ACCESSORIES

PLATE, 4020-18

Required where head frame is less than 3 7/16" (87 mm).

Plate requires minimum 1 3/4" (44 mm) minimum head frame and 2" (51 mm) top rail.

3 7/8" (98 mm) maximum reveal.

PLATE, 4020-18G

For flush ceiling condition.

Plate requires minimum 1 3/4" (44 mm) minimum head frame and 2 3/4" (70 mm) top rail.

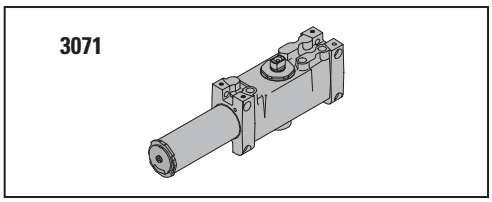

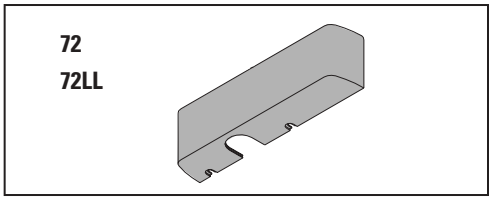

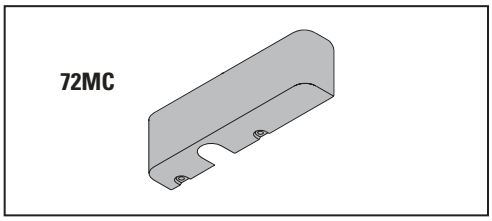

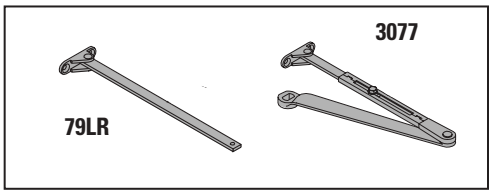

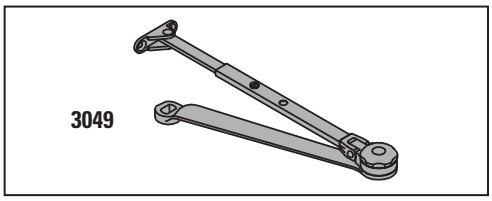

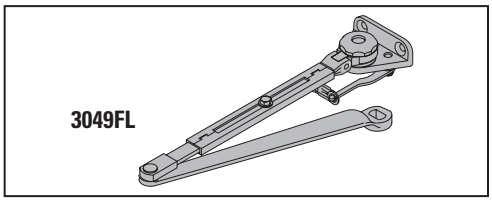

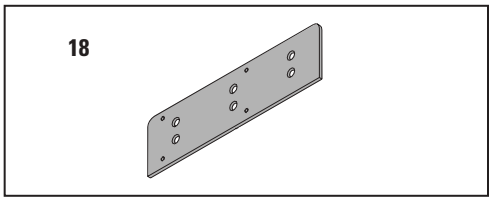

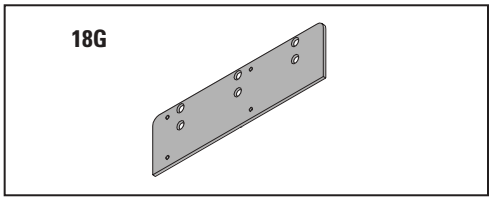

LCN CLOSERS
121 W. RAILROAD AVE.
P.O. BOX 100
PRINCETON, IL, USA 61356-0100

PHONE 800-526-2400
FAX 800-248-1460
www.lcnclosers.com

3/04

LCN 4020 SERIES

TABLE OF SIZES

Select closer based on width of door.
The spring power of non-sized 4021 cylinder is adjustable from size 1 through size 5 and is shipped set to size 3.
Sized 4020 series cylinders available in size 2, 3, 4, 5, or 6.
Closing power of all 4020 Series closers may be increased 50%.
Specify next higher size closer where strong drafts exist.
Delayed action not available with 4026 cylinder.

→ Indicates recommended range of door width for closer size.

EXTERIOR (and VESTIBULE) DOOR WIDTH

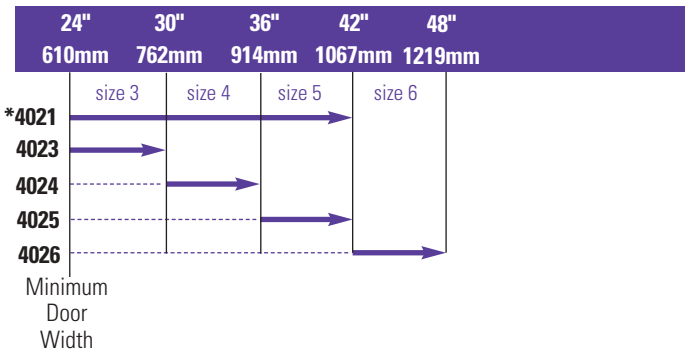

INTERIOR DOOR WIDTH

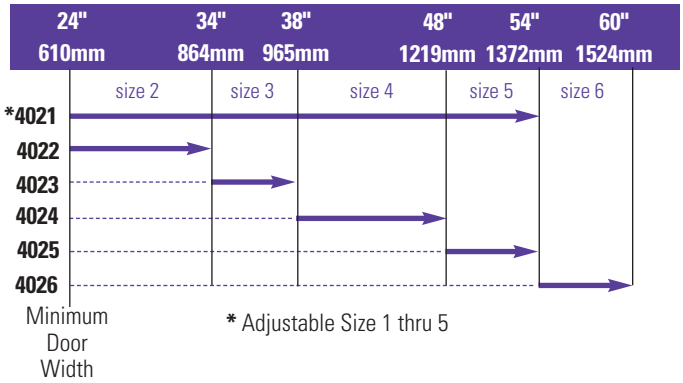

* Adjustable Size 1 thru 5

REDUCED OPENING FORCE 4020 CLOSERS

CAUTION ! Any manual door closer, including those certified by BHMA to conform to ANSI Standard A156.4, that is selected, installed and adjusted based on ADA or other reduced opening force requirements may not provide sufficient power to reliably close and latch a door.

Refer to POWER OPERATORS section for information on systems that meet reduced opening force requirements without effecting closing power.

DOOR WIDTH	36"	42"	48"
8.5* lbs.	4021	4021	4021
5.0* lbs.	4021	4021	4021

** Maximum opening force*

HOW-TO-ORDER 4020 SERIES CLOSERS

1. SELECT CYLINDER SIZE

- ☐ 4021 (adjustable from size 1 to 5)
- ☐ 4022
- ☐ 4023
- ☐ 4024
- ☐ 4025
- ☐ 4026 (DEL not available)

2. SPECIFY HAND

- ☐ RH
- ☐ LH

3. SELECT FINISH

- ☐ Standard Powder Coat _____
  Aluminum, Dark Bronze , Tan, Statuary, Light Bronze, Black, Brass.

Closer will be shipped with:
- STANDARD COVER,
- REGULAR ARM,
- SELF-REAMING and TAPPING SCREWS, unless options listed below are selected.

CLOSER OPTIONS

CYLINDER

- ☐ Delayed Action (DEL)

COVER

- ☐ Lead Lined (LL)
- ☐ Metal (MC)

ARM

- ☐ Hold-Open (H)
- ☐ Fusible Link, 165° F* (FL)
  * Optional link releases at 135° F.

FINISH

- ☐ Custom Powder Coat (RAL) _____
  (handed metal cover required)
- ☐ Plated Finish, US _____
  (handed metal cover required)
- ☐ SRI primer

SCREW PACK

- ☐ TB* & SRT Screw (TBSRT)
- ☐ Wood & Machine Screw (WMS)
- ☐ TB*, Wood & Machine Screw (TBWMS)
- ☐ TORX Machine Screw (TORX)
- ☐ TB* & TORX Machine Screw (TBTRX)
  * Specify door thickness if other than 1 3/4".

INSTALLATION ACCESSORIES

- ☐ Plate, 4020-18
- ☐ Plate, 4020-18G

SPECIAL TEMPLATE

- ☐ ST- _____

LCN CLOSERS
121 W. RAILROAD AVE.
P.O. BOX 100
PRINCETON, IL, USA 61356-0100

PHONE 800-526-2400
FAX 800-248-1460
www.lcnclosers.com
3/04