FEATURES

TOP JAMB (PUSH SIDE) MOUNTING

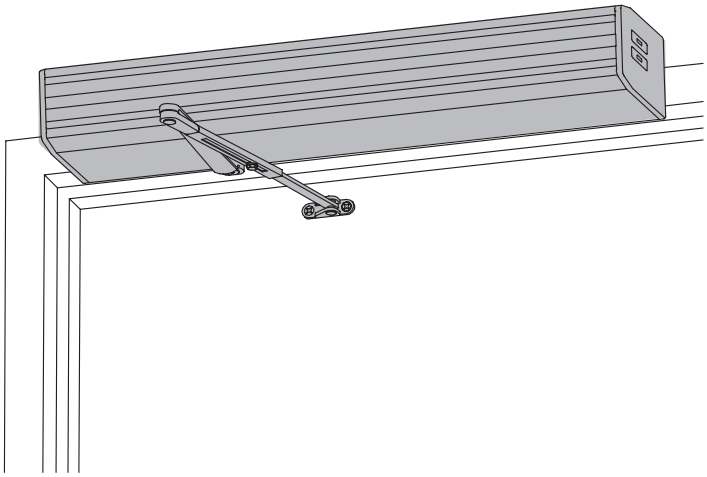

The 4640 AUTO-EQUALIZER™ is LCN's SMART & RELIABLE electrically powered low-energy power operator. It provides easy access for people with disabilities, the elderly, or the frail. Designed primarily for manual opening applications that occasionally require automatic opening.

- **NEW Digital Control Suite**
- **Utilizes a 10 Million Cycle Heavy Duty Door Closer**
- **On-Board Diagnostics**
- **On-board Power Supply**
- **Factory-Default Memory**
- **Plug-and-Play Connections**
- **No Destruct Feature**
- **No Guard Rails or Safety Mats Required**

- Standard, top jamb (push side) mounted 4640 series closer shipped with regular arm, metal cover, and wood and machine screw pack. Actuators available separately, see pages 192-195.
- Meets ADA, requirements (power mode only).
- Non-sized cylinders for interior doors to 4'6" and exterior doors to 3'6".
- Non-handed for either right or left swinging door.
- Easily accessible switches provide on/off and continuous hold-open functions. Control module provides all timing and sequential door functions, electric strike controls and adjustments for opening speed and force.
- Standard or optional custom powder coated finish, end caps are black.
- Optional plated finish on cover, arm, and fasteners.

The 4640 Series is UL and ULC listed with regular arm for self-closing doors and meets the provisions of ANSI Standards A117.1, A156.19, and the Americans with Disabilities Act.

MOUNTING				FINISH		COVER		CYLINDER					*ARM FUNCTION				
TOP JAMB (PULL SIDE)	TOP JAMB (PUSH SIDE)	PARALLEL ARM	CONCEALED	POWDER COAT	PLATED	PLASTIC	METAL	NON-HANDED	NON-SIZED	ACCESSIBILITY*	POWER OPERATOR	HOLD-OPEN	STANDARD (SINGLE)	REGULAR (DOUBLE)	EXTRA DUTY	CUSH-N-STOP**	SPRING CUSH
○	●	○	○	●	●	○	●	●	●	○	●	●**	○	90°	○	○	○

● AVAILABLE
○ NOT AVAILABLE

♿ *Closer available with less than 5.0 lbs. opening force on 36" door.*
* *See individual series for maximum manual opening.*
** *Switch provided for continuous Hold-Open.*

LCN CLOSERS
121 W. RAILROAD AVE.
P.O. BOX 100
PRINCETON, IL, USA 61356-0100

PHONE 800-526-2400
FAX 800-248-1460
www.lcnclosers.com
8/04

MOUNTING DETAILS

TOP JAMB (PUSH SIDE) MOUNTING

MAXIMUM OPENING

Templating allows 90° power opening and 100° manual opening.

Consult factory for all pivot mounted installations.

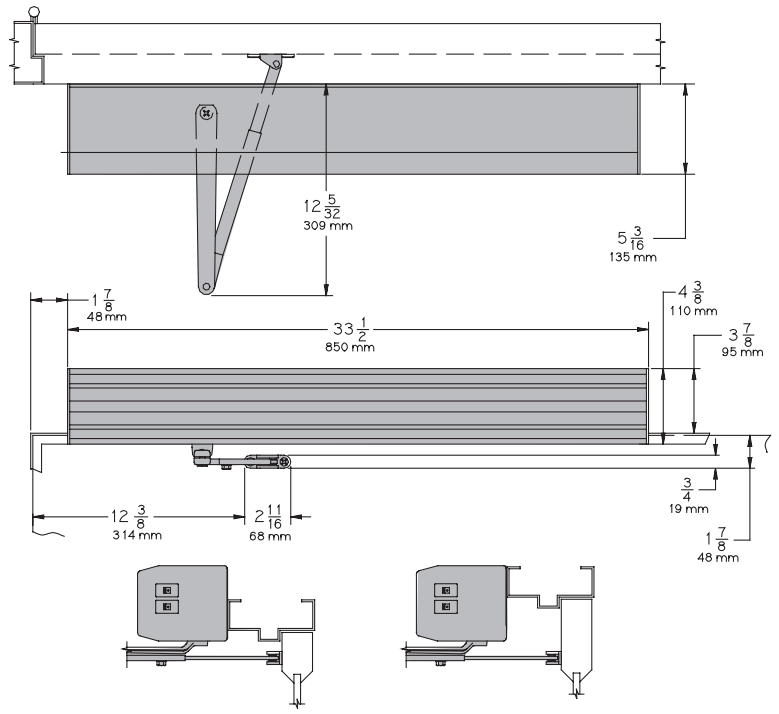

Standard Mount Flush Ceiling Mount

- **Butt Hinges** should not exceed 5" (127 mm) in width.
- **Auxiliary Stop is recommended.**
- **Reveal** of 4 1/2" (114 mm) allows up to 90° power opening and 100° manual opening. 8" (203 mm) allows up to 90° power opening and 100° manual opening with LONG ARM where standard rod and shoe is replaced with optional LONG ROD AND SHOE, 4640-79LR.
- **Head Frame** minimum 1 3/4" (44 mm). The standard mounting plate is also used to meet flush ceiling conditions.
- **Top Rail** minimum 1 3/4" (44 mm).
  Flush ceiling installation requires 3 3/4" (95 mm) minimum.
- **Opening Time and Force** are variable by adjustments to the electronic control module located on the operator assembly. Maximum hold-open time adjustable up to approximately five minutes.
- **System Diagram** See "POWER OPERATORS" section page 9 for typical system wiring and pages 10-11 for electrical data.

Options

- Long arm.

Special Templates

Customized installation templates or products may be available to solve unusual applications. Contact LCN for assistance.

LCN CLOSERS
121 W. RAILROAD AVE.
P.O. BOX 100
PRINCETON, IL, USA 61356-0100

PHONE 800-526-2400
FAX 800-248-1460
www.lcnclosers.com
8/04

CYLINDERS

CYLINDER ONLY, 4642-3971

Standard, non-handed, cast iron cylinder.

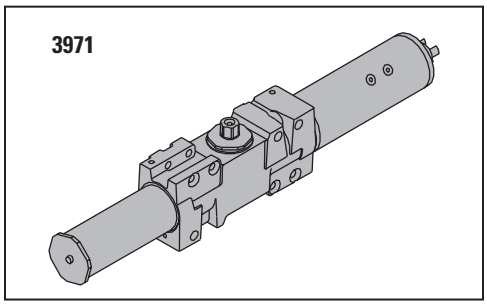

CYLINDER ASSEMBLY, 4642-3071

Standard, non-handed, cast iron cylinder and mounting plate. Includes; 4640-3454 Motor Clutch, 4640-3180 I/O Board Assembly and 4640-3462 Controller.

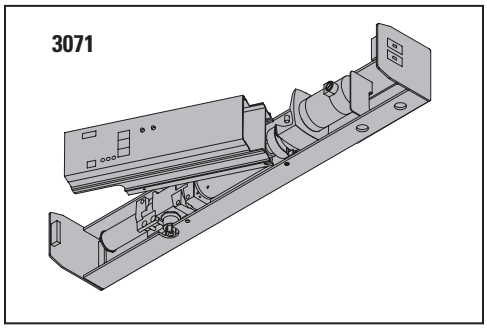

COVERS

COVER, 4640-72MC

Standard, non-handed metal cover.

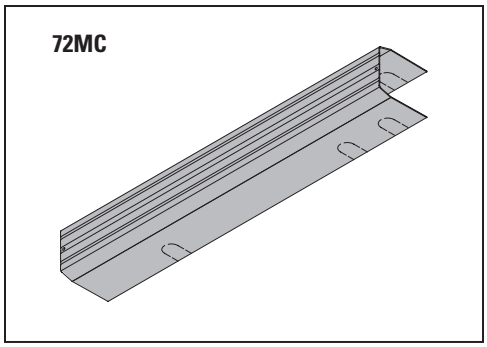

ARMS

REGULAR ARM, 4640-3077

Non-handed arm.

LONG ARM, 4640-3077L

Arm includes LONG ROD AND SHOE, 4640-79LR for deep reveals.

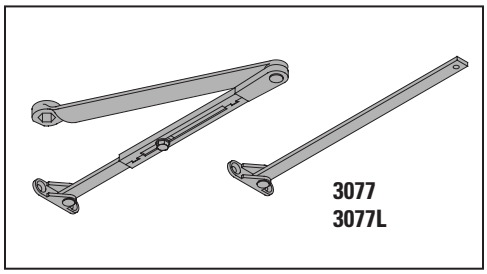

LCN CLOSERS
121 W. RAILROAD AVE.
P.O. BOX 100
PRINCETON, IL, USA 61356-0100

PHONE 800-526-2400
FAX 800-248-1460
www.lcnclosers.com
8/04

INSTALLATION ACCESSORIES

SWITCH END CAP, 4640-334
End cap (black powder coat only) with cut outs for installing on/off and hold-open switches.

BLANK END CAP, 4640-334-2
Black power coat only.

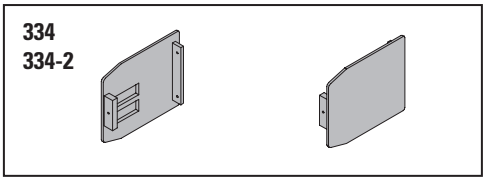

ON/OFF SWITCH ASSEMBLY, 4640-3179-1
Red rocker switch. Plugs into high voltage PC board.

HOLD-OPEN SWITCH ASSEMBLY, 4640-3179-2
Black rocker switch. Plug into low voltage PC board.

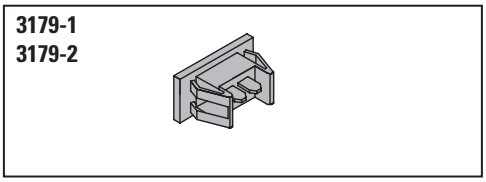

PC BOARD ASSEMBLY, 4640-3180
High and low voltage PC boards connected to mounting bracket.

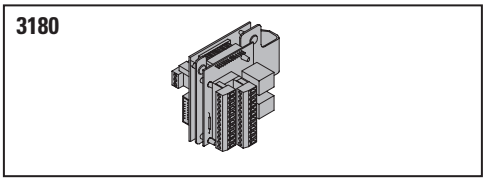

MOTOR/CLUTCH ASSEMBLY, 4640-3454
A geared assembly in an LCN power operator that incorporates a "no destruct" feature.

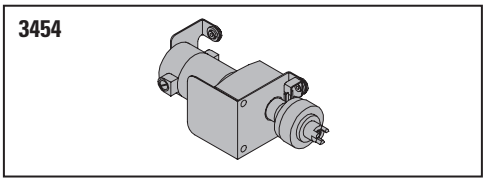

CONTROLLER ASSEMBLY, 4640-3462
Digital controller with built-in 12/24 VDC power supply. Programming and timing functions are adjusted on controller.

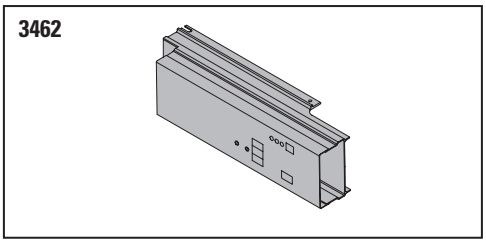

AC POWER CABLE, 4640-3498-2
2 wire cable to connect 120 VAC from PC board assembly to controller.

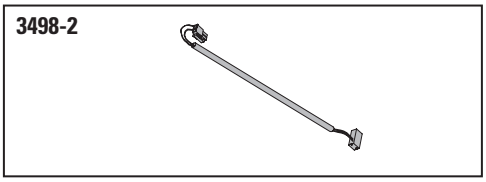

RIBBON CABLE CONNECTOR, 4640-3498-1
16 wire ribbon cable connecting 1-24 pin terminal connectors to controller.

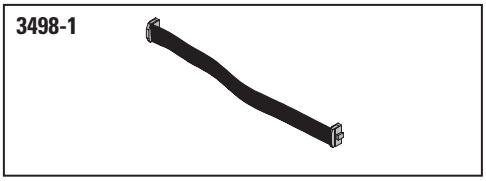

LCN CLOSERS
121 W. RAILROAD AVE.
P.O. BOX 100
PRINCETON, IL, USA 61356-0100

PHONE 800-526-2400
FAX 800-248-1460
www.lcnclosers.com
8/04

TABLE OF SIZES

Non-sized 4640 series cylinder is adjustable from size 2 through size 5 and is shipped set to size 3. Closing power of 4640 Series closers may be increased 50%.

→ Indicates recommended range of door width for closer size.

NOTE: Minimum door width 36" (914 mm)

EXTERIOR (and VESTIBULE) DOOR WIDTH

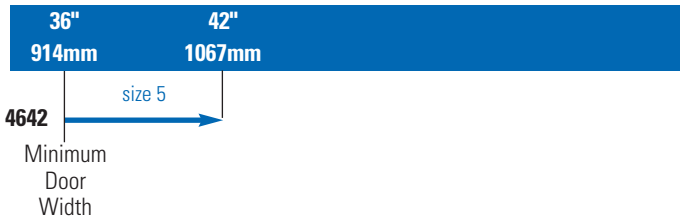

INTERIOR DOOR WIDTH

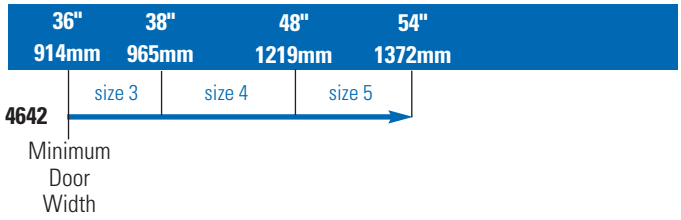

HOW-TO-ORDER 4640 SERIES CLOSERS

1. SPECIFY FINISH.

☐ Standard Powder Coat _____
Aluminum, Dark Bronze, Tan, Statuary, Light Bronze, Black, Brass.

Closer will be shipped with:
- STANDARD CYLINDER,
- STANDARD METAL COVER,
- REGULAR ARM, and
- WOOD and MACHINE SCREW PACK, unless options listed below are selected.

CLOSER OPTIONS

FINISH

☐ Custom Powder Coat (RAL) _____
☐ Plated Finish, US _____

ARM

☐ Long (LONG)

SCREW PACK

☐ TB*, Wood & Machine Screw (TBWMS)
☐ TORX Machine Screw (TORX)
☐ TB* & TORX Machine Screw (TBTRX)

*Specify door thickness if other than 1 3/4".

SPECIAL TEMPLATE

☐ ST-_____

LCN CLOSERS
121 W. RAILROAD AVE.
P.O. BOX 100
PRINCETON, IL, USA 61356-0100

PHONE 800-526-2400
FAX 800-248-1460
www.lcnclosers.com
8/04

Notes

LCN CLOSERS
121 W. RAILROAD AVE.
P.O. BOX 100
PRINCETON, IL, USA 61356-0100

PHONE 800-526-2400
FAX 800-248-1460
www.lcnclosers.com
8/04