CONCEALED (IN DOOR) MOUNTING

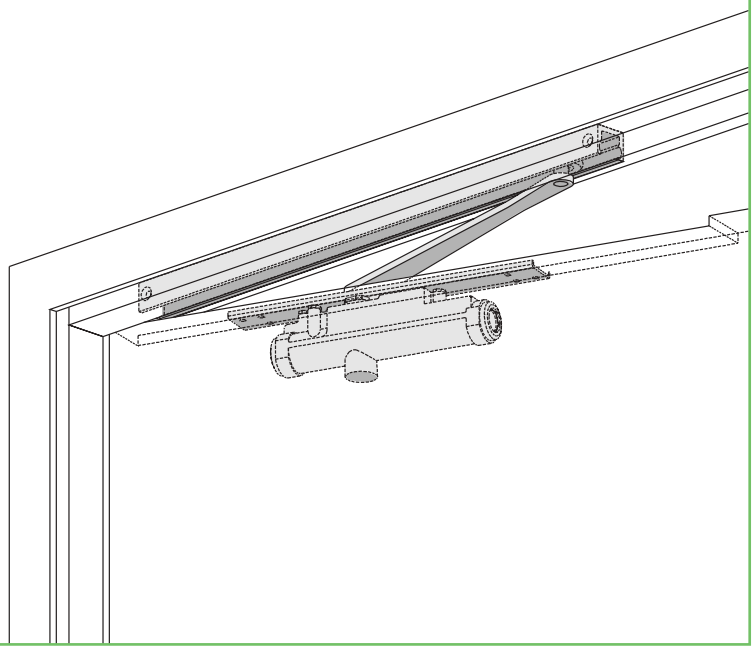

The concealed 3130 is designed to mount in a 1 3/4" interior door. The single lever arm and roller assembly provides complete concealment and the choice of finishes and track functions meet virtually all architectural requirements.

The 3130 Series is UL and ULC listed without hold-open for self-closing doors. Tested and certified under ANSI Standard A156.4, grade one.

- Standard 3130 series closer shipped with standard arm, standard track and wood and machine screw pack. See 3130 Series page 23 for options.
- Sized cylinders for interior doors to 3'2".
- Handed for right or left swinging doors.
- Closers to meet ADA requirements. See 3130 Series page 24.
- Standard or optional custom powder coated finish.
- Optional plated finish on arm and fasteners.
- Optional SRI primer for installations in corrosive conditions.
- Consult factory for installation with pivots.

CONCEALED MOUNTING			FINISH		CYLINDER				ARM		*ARM FUNCTION		
IN FRAME	IN 1 3/4" TUBE	IN DOOR	POWDER COAT	PLATED	HANDED	SIZED	ACCESSIBILITY	DELAYED ACTION	CONCEALED	EXPOSED	STANDARD (SINGLE)	REGULAR (DOUBLE)	HOLD-OPEN
○	○	●	●	●	●	●	♿	○	●	○	140°	○	100°

● *Available*
○ *Not available*

♿ *Closer available with less than 5.0 lbs. opening force on 36" door.*
**Maximum opening/hold-open point with standard template. See individual closer series for degrees of opening per installation.*

LCN CLOSERS
121 W. RAILROAD AVE.
P.O. BOX 100
PRINCETON, IL, USA 61356-0100

PHONE 800-526-2400
FAX 800-248-1460
www.lcnclosers.com
3/04

LCN 3130 SERIES

MOUNTING DETAILS

CONCEALED MOUNTING

For interior doors.
Single acting cylinder and standard arm in top rail of door.
Concealed track in head frame.

MAXIMUM OPENING

Templating allows 140°, trim permitting. 100° with optional bumper installed.

Adjustable hold-open points from 85° to 100°, with hold-open track.

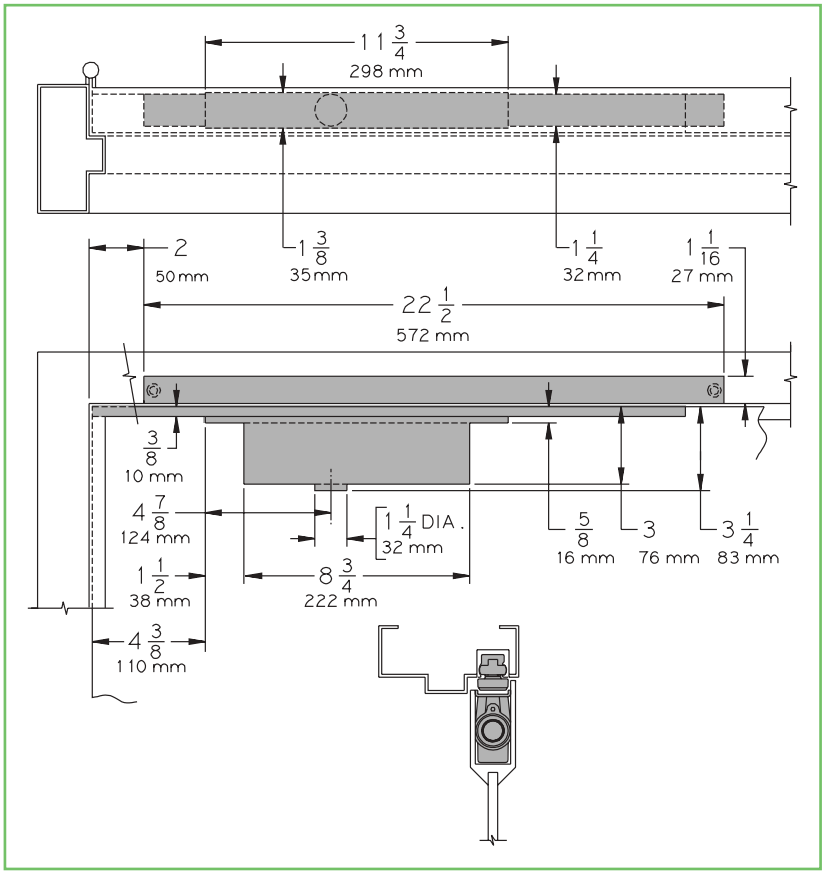

- **Butt Hinges** should not exceed 5" (127 mm) in width.
- **Auxiliary Stop** is recommended at hold-open point or where a door cannot swing 140°.
  Optional track bumper assembly assists backcheck in cushioning the opening swing of the door. It is not intended to replace an auxiliary stop.
- **Top Rail** minimum 4" (102 mm) required.
- **Door Thickness** 1 3/4" (44 mm) minimum. Please consult the door manufacturer to assure that the door integrity and warranty is maintained after installing the 3130 Series door closer in a 1 3/4" thick wood door.
- **Door Width** 2'2" (660 mm) minimum.

OPTIONS

- Standard track with Bumper
- Hold-open track
- Hold-open track with Bumper
- Consult factory for installations with pivots.

SPECIAL TEMPLATES

Customized installation templates or products may be available to solve unusual applications. Contact LCN for assistance.

LCN CLOSERS
121 W. RAILROAD AVE.
P.O. BOX 100
PRINCETON, IL, USA 61356-0100

PHONE 800-526-2400
FAX 800-248-1460
www.lcnclosers.com

3/04

CYLINDERS

CYLINDER, 3130-3071

Standard, handed, cast iron cylinder assembly with mounting plate. For various applications see "Table of Sizes" on 3130 Series page 24.

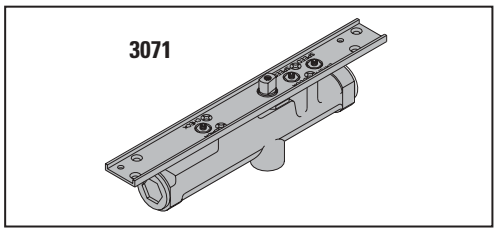

ARMS

STANDARD ARM, 3130-3077T

Handed arm.
Track roller not included with arm.

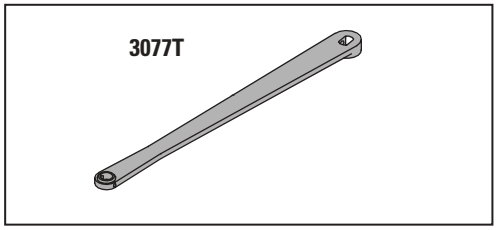

TRACKS

STANDARD TRACK, 3130-3038

Standard, non hold-open, non-handed track.
Will accept hold-open clip and/or bumper assembly.

STANDARD TRACK with BUMPER, 3130-3038B

Optional, non hold-open, non-handed track with bumper.
Will accept hold-open clip.

HOLD-OPEN TRACK, 3130-3038H

Optional, non-handed hold-open track.
Will accept bumper assembly.

HOLD-OPEN TRACK with BUMPER, 3130-3038HB

Optional, non-handed hold-open track with bumper.

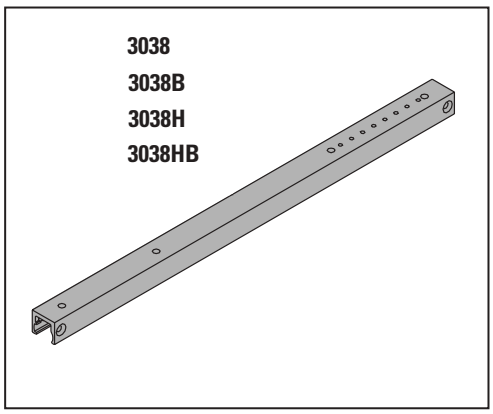

INSTALLATION ACCESSORIES

TRACK BUMPER, 3130-169

Mounts in track to assist backcheck, does not replace auxiliary stop. Limits maximum opening.
Consists of bumper, bumper post, and mounting screw.

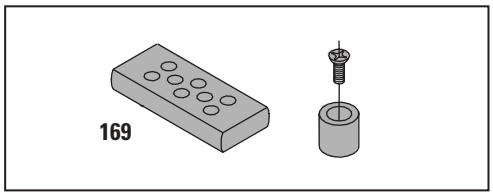

HOLD-OPEN CLIP, 3130-3054

Mounts in track to provide hold-open function.
Hold-open point controlled by clip location.

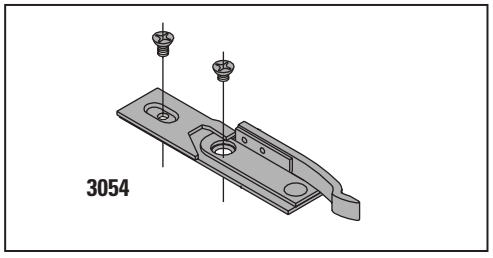

TRACK ROLLER, 3130-3034

Quiet, low friction roller assembly.
Shoulder dimension "X" = 1/8" (2mm).

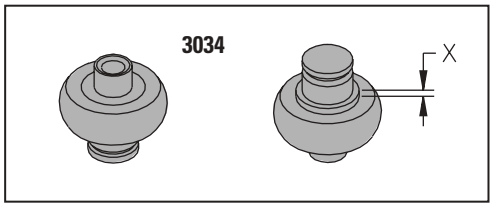

LCN CLOSERS
121 W. RAILROAD AVE.
P.O. BOX 100
PRINCETON, IL, USA 61356-0100

PHONE 800-526-2400
FAX 800-248-1460
www.lcnclosers.com
3/04

LCN 3130 SERIES

ORDERING INFORMATION

TABLE OF SIZES

Select closer based on width of door.
3130 Series cylinders available in size 1, 2, or 3.
Closing power of 3130 Series closers is not adjustable.

→ Indicates recommended range of door width for closer size.

INTERIOR DOOR WIDTH

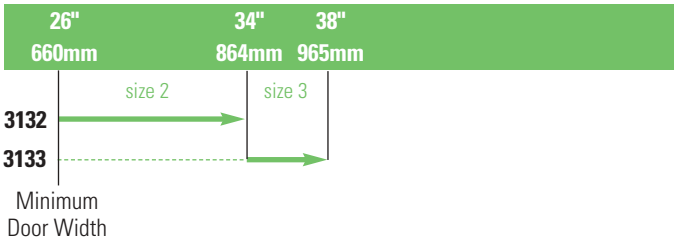

HOW-TO-ORDER 3130 SERIES CLOSERS

1. SELECT CYLINDER SIZE

☐ 3131 (ADA)
☐ 3132
☐ 3133

2. SPECIFY HAND

☐ RH
☐ LH

3. SPECIFY FINISH

☐ Standard Powder Coat _____
Aluminum, Dark Bronze , Tan, Statuary, Light Bronze, Black, Brass.

Closer will be shipped with:
- STANDARD ARM,
- TRACK ROLLER,
- STANDARD TRACK,
- WOOD and MACHINE SCREW PACK, unless options listed below are selected.

CLOSER OPTIONS

TRACK

☐ Standard with Bumper (BUMPER)
☐ Hold-open (H)
☐ Hold-open with Bumper (HBUMPER)

FINISHES

☐ Custom Powder Coat (RAL) _____
☐ Plated Finish, US _____
☐ SRI primer

SCREW PACK

☐ TORX Machine Screw

SPECIAL TEMPLATE

☐ ST- _____

REDUCED OPENING FORCE 3130 CLOSERS

CAUTION ! Any manual door closer, including those certified by BHMA to conform to ANSI Standard A156.4, that is selected, installed and adjusted based on ADA or other reduced opening force requirements may not provide sufficient power to reliably close and latch a door.

Refer to POWER OPERATORS section for information on systems that meet reduced opening force requirements without affecting closing power.

	DOOR WIDTH	36"	42"	48"
♿	8.5* lbs.	N/A	N/A	N/A
	5.0* lbs.	3131	3131	3132

** Maximum opening force*

LCN CLOSERS
121 W. RAILROAD AVE.
P.O. BOX 100
PRINCETON, IL, USA 61356-0100

PHONE 800-526-2400
FAX 800-248-1460
www.lcnclosers.com
3/04