TOP JAMB (PUSH SIDE) MOUNTING

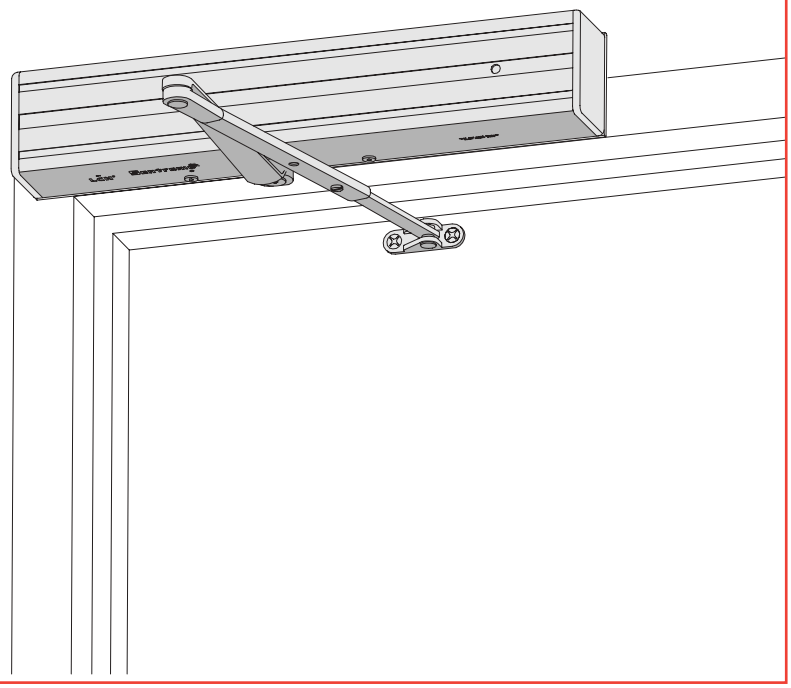

The 4410ME SENTRONIC® is a heavy duty, electrically controlled closer/holder designed to provide infinitely adjustable hold-open for fire and smoke barrier doors. Door is held open until current interruption releases mechanism and the door closes. Double lever arm closer is specifically designed for interior doors. Choice of finishes, cylinder functions, and installation accessories meet virtually all life safety requirements.

- Standard 4410ME series closer shipped with a 24V or 120V cylinder (please specify) on a mounting plate, metal cover, regular arm, and wood and machine screw pack. See 4410ME Series pages 29 & 30 for options.
- Sized cylinders for interior doors to 4'0".
- Functions as full rack and pinion door closer when hold-open is not engaged or current is interrupted.
- Handed for right or left swinging door.
- Concealed or exposed electrical connections.
- Built-in "On/Off" switch controls hold-open function.
- Interfaces with fire alarm systems. Consult factory.
- Standard or optional custom powder coat finish.
- Optional plated finish on cover, arm, and fasteners.

The 4410ME Series is UL listed for smoke barrier or labeled fire doors. Tested and certified under ANSI Standard A156.15. Conforms to life safety code, NFPA 101. An ME provides only the closer/holder function.

MOUNTING					FINISH		COVER		CYLINDER						*ARM FUNCTION				
HINGE (PULL) SIDE	TOP JAMB (PUSH)	STOP FACE (PUSH)	CONCEALED (FRAME)	CONCEALED (DOOR)	POWDER COAT	PLATED	PLASTIC	METAL	HANDED	NON-SIZED	SIZED	SINGLE POINT HOLD-OPEN	MULTI-POINT HOLD-OPEN	BYPASS 80/140	STANDARD (SINGLE)	REGULAR (DOUBLE)	SWING FREE	DOUBLE EGRESS	
○	●	○	○	○	●	●	○	●	●	○	●	○	●	●	○	150°	○	○	

● *Available*
○ *Not available*

* *Maximum hold-open with standard template. See individual closer series for degrees of opening and hold-open per installation.*

LCN CLOSERS
121 W. RAILROAD AVE.
P.O. BOX 100
PRINCETON, IL, USA 61356-0100

PHONE 800-526-2400
FAX 800-248-1460
www.lcnclosers.com
3/04

LCN 4410ME SERIES

TOP JAMB (PUSH SIDE) MOUNTING

MAXIMUM OPENING

Templating allows 160°, infinite hold-open points up to 150°.

Optional long arm allows 180°, hold-open points up to 170°.

ME ELECTRICAL OPTIONS

These assemblies have a single electrical circuit with a choice of voltages. A separate TRANSFORMER, 4040SE-3210, can be used to reduce line voltage to 24V AC. Circuitry accepts either AC or DC input.
24V holding solenoid **(24)** or 120V holding solenoid **(120)**, please specify.

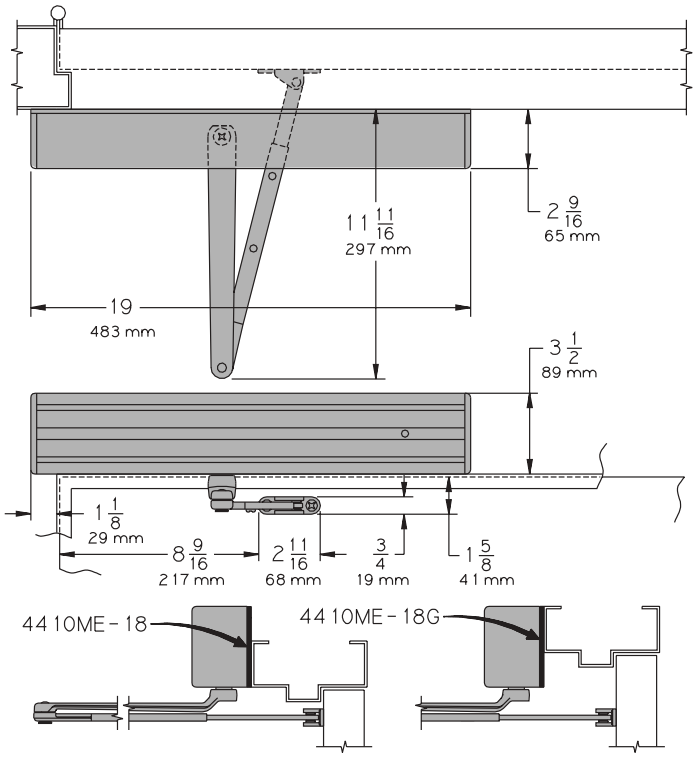

- **Butt Hinges** should not exceed 4 1/2" (114 mm) in width.
- **Top Rail** 1 3/4" (44 mm) minimum. 3 3/4" (95mm) minimum with flush ceiling.
- **Reveal** 3 7/8" (98 mm) maximum regular or long arm. For reveals greater than 3 7/8" consult factory.
- **Head Frame** requires 1 1/2" (38 mm) minimum. 2" (51 mm) minimum with flush ceiling.
- **Flush Ceiling** requires PLATE, 4410ME-18G substituted for standard mounting plate.
- **Bypass** (suffix "B80 or B140") eliminates hold-open function up to a specified point of the doors swing. B80 cylinder from 0° to 80°. B140 cylinder from 0° to 140°.
- **Wiring Diagram**

Options

- Hold-open bypass.
- Optional long arm allows 180° with hold-open points up to 170°.
- Optional –18G plate accommodates flush ceiling conditions.
- 24V or 120V volt input, please specify.

Special Templates

Customized installation templates or products may be available to solve unusual applications. Contact LCN for assistance.

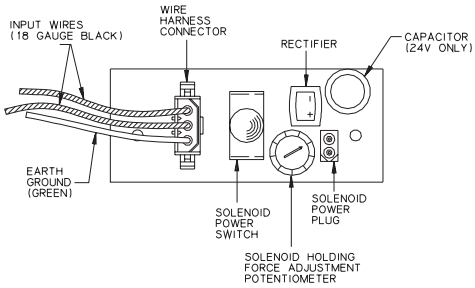

ME (4310, 4410) WIRING DIAGRAM

LCN CLOSERS
121 W. RAILROAD AVE.
P.O. BOX 100
PRINCETON, IL, USA 61356-0100

PHONE 800-526-2400
FAX 800-248-1460
www.lcnclosers.com

3/04

CYLINDER

ME CYLINDER, 4410ME-3971

Standard, handed cast iron cylinder assembly. 24V holding solenoid **(24)** or 120V holding solenoid **(120),** please specify. For various applications see "Table of Sizes" on 4410ME Series page 31.

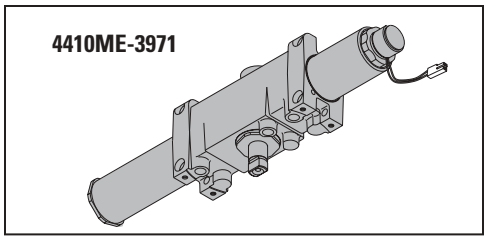

ME CYLINDER, 4410ME-3071

Standard, handed cylinder and mounting plate assembly. "On/Off" switch assembly controls hold-open function. Circuitry accepts either AC or DC input.
24V holding solenoid **(24)** or 120V holding solenoid **(120),** please specify. For various applications see "Table of Sizes" on 4410ME Series page 31.

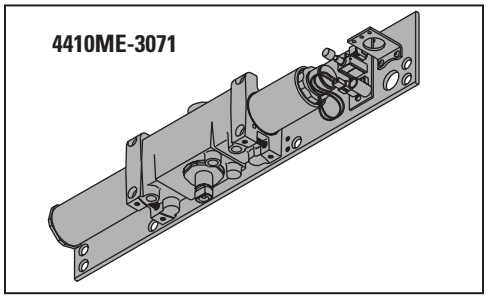

COVERS

COVER, 4410ME-72MC

Handed, metal cover.

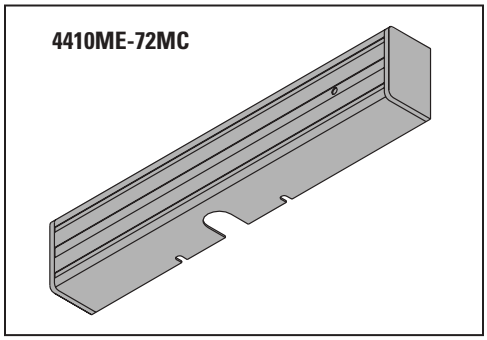

ARMS

REGULAR ARM, 4410ME-3077

Non-handed arm.
3 7/8" (98 mm) maximum reveal.

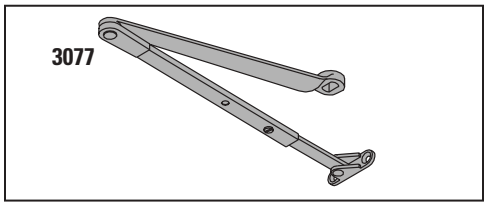

LONG ARM, 4410ME-3077L

Optional long ARM for increasing opening to 180°.
3 7/8" (98 mm) maximum reveal.

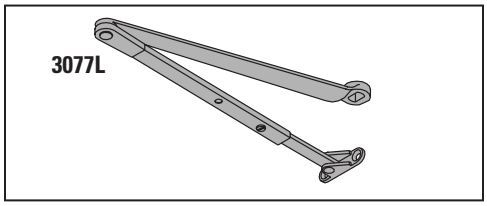

LCN CLOSERS
121 W. RAILROAD AVE.
P.O. BOX 100
PRINCETON, IL, USA 61356-0100

PHONE 800-526-2400
FAX 800-248-1460
www.lcnclosers.com
3/04

LCN 4410ME SERIES

SWITCH

SWITCH, 4410ME-3351

"On/Off" switch assembly provides continuous hold-open function. Available as 24V or 120V, please specify.

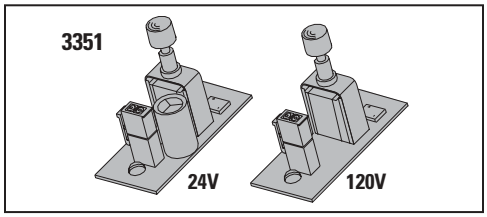

INSTALLATION ACCESSORIES

MOUNTING PLATE, 4410ME-18

Standard mounting plate.

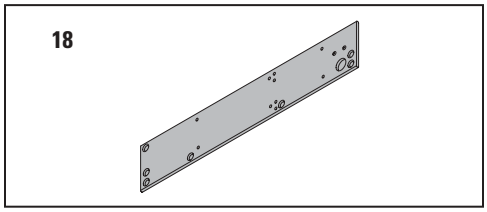

MOUNTING PLATE, 4410ME-18G

Optional mounting plate substituted for standard plate on flush ceiling installations.

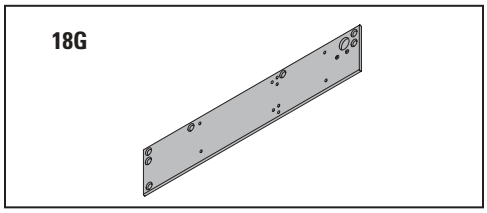

TRANSFORMER, 4040SE - 3210

Reduces line voltage from 120V to 24V AC.
Mounted on cover for 4" (102 mm) x 4" x 2 1/8" (54 mm) junction box (by others).

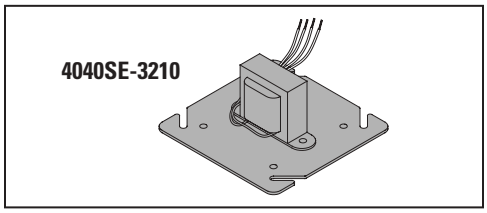

ME WIRING HARNESS, 4410ME-3354

Three wire harness with 6" (152 mm) leads for field wiring connections.

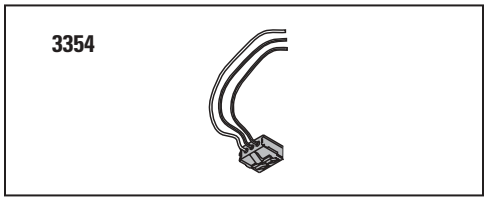

LCN CLOSERS
121 W. RAILROAD AVE.
P.O. BOX 100
PRINCETON, IL, USA 61356-0100

PHONE 800-526-2400
FAX 800-248-1460
www.lcnclosers.com
3/04

TABLE OF SIZES Select closer based on width of door.
Sized 4410ME series cylinders available in size 3 or 4.
Closing power of all 4410ME Series closers may be increased 15%.

→ Indicates recommended range of door width for closer size.

INTERIOR DOOR WIDTH

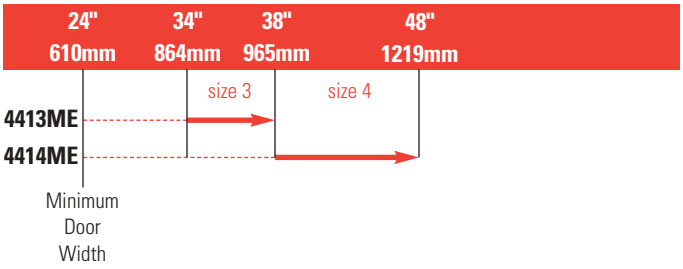

HOW-TO-ORDER 4410ME SERIES CLOSERS

1. SELECT CYLINDER SIZE.

☐ 4413ME
☐ 4414ME

2. SPECIFY HAND.

☐ RH
☐ LH

3. VOLTAGE

☐ 24V AC/DC
☐ 120V AC/DC

4. SPECIFY FINISH.

☐ Standard Powder Coat _____
Aluminum, Dark Bronze , Tan, Statuary, Light Bronze, Black, Brass.

Closer will be shipped with:
- STANDARD COVER,
- REGULAR ARM,
- WOOD & MACHINE SCREW PACK,
unless options listed below are selected.

CLOSER OPTIONS

CYLINDER FUNCTION

☐ Bypass 80° (B80)
☐ Bypass 140° (B140)

ARM

☐ Long (LONG)

FINISHES

☐ Custom Powder Coat (RAL) _____
☐ Plated Finish, US _____

SCREW PACK

☐ TB*, Wood & Machine Screw (TBWMS)
☐ TORX Machine Screw (TORX)
☐ TB* & TORX Machine Screw (TBTRX)
*Specify door thickness if other than 1 3/4".

INSTALLATION ACCESSORIES

☐ Plate, 4410ME-18G
(substituted for standard mounting plate.)
☐ Transformer, 4040SE-3210

SPECIAL TEMPLATE

☐ ST-_____

LCN CLOSERS
121 W. RAILROAD AVE.
P.O. BOX 100
PRINCETON, IL, USA 61356-0100

PHONE 800-526-2400
FAX 800-248-1460
www.lcnclosers.com
3/04