FEATURES

SEM 7820 MAGNET

Floor mounted.

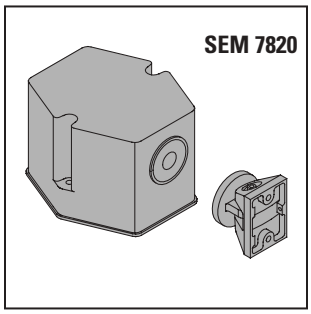

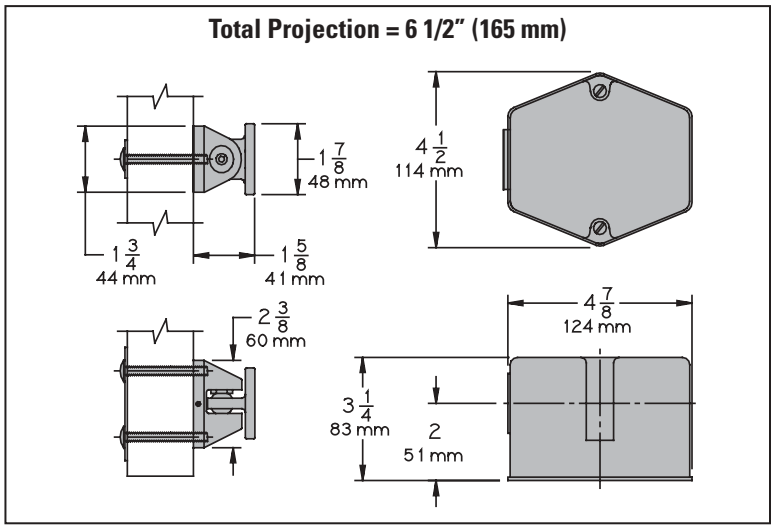

The Sentronic® SEM7800 Series are heavy duty, electrically controlled door holding magnets. Magnets are fail safe and hold until the current is interrupted. A manual door closer is used to control and close the door. A choice of floor, recessed wall, or surface mounted wall magnets are available.

All SEM 7800 series magnets are UL listed for smoke barrier or labeled fire doors.

SEM 7830 MAGNET

Surface wall mounted.

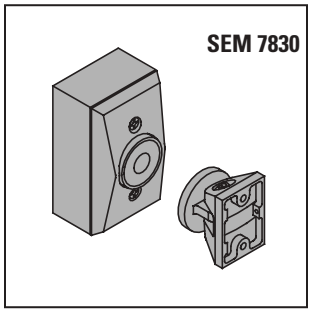

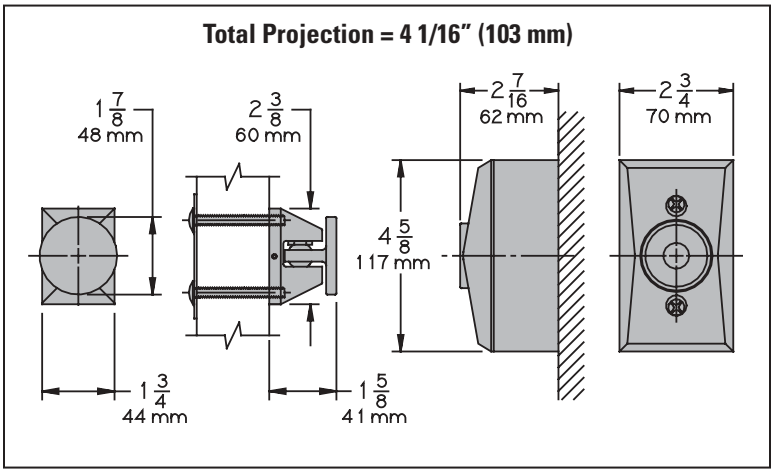

SEM FEATURES

- 7800 Series magnets are shipped with a screw pack for attachment of the door mounted armature.
- Available in Aluminum or Dark Bronze finishes.
- Wall units should be mounted per template instructions.
- Suitable for use in pocket installations.

NOTE: Armature extensions are not available from LCN.

LCN CLOSERS
121 W. RAILROAD AVE.
P.O. BOX 100
PRINCETON, IL, USA 61356-0100

PHONE 800-526-2400
FAX 800-248-1460
www.lcnclosers.com
3/04

LCN SEM7800 SERIES

SEM 7840 MAGNET

Low profile recessed wall mount.
2" (51 mm) x 4" (102 mm) x 1 1/2" (38 mm) outlet box not included.

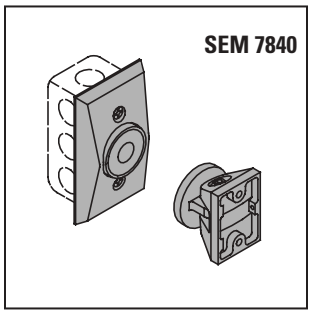

Total Projection = 2 7/16" (62 mm)

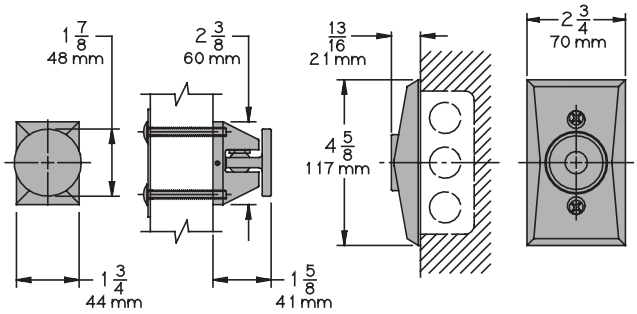

SEM 7850 MAGNET

Standard profile recessed wall mount.
2" (51 mm) x 4" (102 mm) x 1 1/2" (38 mm) outlet box not included.

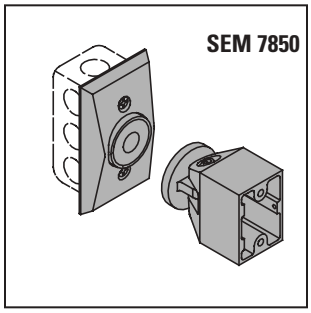

Total Projection = 3 7/16" (87 mm)

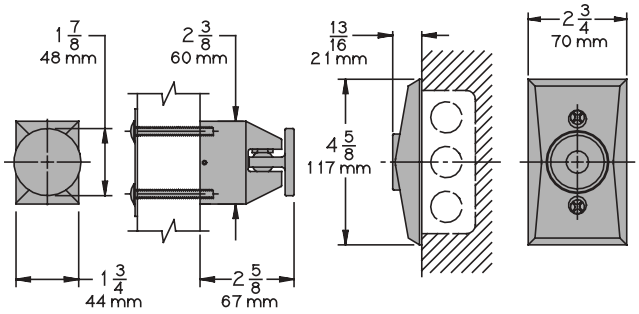

HOW-TO-ORDER 7800 SERIES MAGNETS

1. SELECT MAGNET SERIES.
- ☐ SEM7820
- ☐ SEM7830
- ☐ SEM7840
- ☐ SEM7850

2. SELECT VOLTAGE.
- ☐ 24V
- ☐ 120V

3. SPECIFY FINISH.
- ☐ Aluminum
- ☐ Dark Bronze

ELECTRICAL DATA

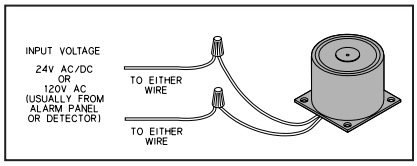

24V AC/DC or 120V AC input.
Heavy duty electromagnet is protected against transients and voltage surges up to 600 volts.
24V AC/DC nominal
+10% - 15% @ .110 amp. maximum.
120V AC nominal
+10% -15% @ .020 amp. maximum.
An SED transformer (4040SED-3210) can be used to reduce line voltage where desired. It will power up to three magnets.

Primary	120V AC 50-60 Hz
Secondary	24V AC @ .400 amp. maximum.

LCN CLOSERS
121 W. RAILROAD AVE.
P.O. BOX 100
PRINCETON, IL, USA 61356-0100

PHONE 800-526-2400
FAX 800-248-1460
www.lcnclosers.com
3/04