Automatic Flush Bolts - Metal Doors

FB30 Series for Metal Doors

- Fully Automatic—inactive door is latched when active door closes, bolts retract when active door is opened.
- Low Actuation Forces—Top Bolt Has No Spring Tension.
- UL Listed for Fire Doors.
- Fits standard ANSI A115.4 Door Frame Preparations.
- Non-handed.
- Models with Auxiliary Fire Latch eliminates the bottom bolt and is UL Listed for Fire Doors.
- Finishes: US3, US4, US10, US10B, US32, US32D.
- Finished Cover Plates permit finish changes in stock or at job site.
- Bolts have 3/4" throw with a 7/8" vertical adjustment.
- Standard Rod Length is 12", which is measured from the center of the flush bolt body to the bolt tip.
- Meets ANSI A156.3 Type 25.
- Optional Dust Proof Strikes—DP1 or DP2, prevents dirt build-up assuring full engagement of bottom bolt.
- Optional rod lengths available for top bolt for non-fire rated openings—18", 24", 36" and 48".

FB31P Pair	**FB32**	**FB33**	**FB31T**	**FB31B**
Top and Bottom Bolts	**Top Bolt with Auxiliary Fire Latch**	**Top Bolt with Auxiliary Fire Latch and Retrofit Plate**	**Top Bolt Only**	**Bottom Bolt Only**
Both bolts are non-handed, but are not identical. The top bolt has no spring tension, resulting in lower actuation force with a smoother operation.	FB32 combination includes FB31T Top Bolt with auxiliary fire latch. Provides a fire-listed application without a bottom bolt— meaning no floor prep and strike. The auxiliary fire latch, mounted in the door edge, releases under extremely high temperatures to keep the doors in alignment during a fire.	FB33 used to update existing flush bolt installations with auxiliary fire latch eliminating bottom bolt and floor strike. FB33 consists of FB31T Top Bolt, auxiliary Fire Latch and Filler plate to cover existing cutout when bottom bolt is removed.		
• UL Listed 3 hours on 8'0" x 10'0" Opening	• UL Listed 3 hours on 8'0" x 8'0" Opening	• UL Listed 3 hours on 8'0" x 8'0" Opening		

Dimensions:

Body Size: 1" Wide x 6-3/4" Long x 2" Deep
Guide Size: 1" Wide x 1-27/32" Long x 27/32" High x 3/32" Thick
Strike Size: 15/16" Wide x 2-1/4" Long x 1/16" Thick
Rub Plate Size: 1-1/4" Wide x 1-11/16" Long x 3/64" Thick
Auxiliary Fire Latch Size: 1" Wide x 1-3/4" Long x 3-1/4" Deep
Filler Plate Size: 1" Wide x 6-3/4" Long x 3/32" Thick

Automatic Flush Bolts - Wood Doors

FB40 Series for Wood Doors

- Fully Automatic—inactive door is latched when active door closes, bolts retract when active door is opened.
- Low Actuation Forces—Top Bolt Has No Spring Tension.
- UL Listed for Fire Doors.
- Non-handed.
- Models with Auxiliary Fire Latch eliminates the Bottom Bolt and is UL Listed for Fire Doors.
- Finishes: US3, US4, US10, US10B, US32, US32D.
- Finished Cover Plates permit finish changes in stock or at job site.
- Bolts have 3/4" throw with a 7/8" vertical adjustment.
- Meets ANSI A156.3 Type 25.
- Optional Dust Proof Strikes—DP1 or DP2, prevents dirt build-up assuring full engagement of bottom bolt.

FB41P Pair

Top and Bottom Bolts

Both bolts are non-handed, but are not identical. The top bolt has no spring tension, resulting in lower actuation force with a smoother operation.

- UL Listed 90 minutes on 8'0" x 8'0" Opening

FB42

Top Bolt with Auxiliary Fire Latch

FB42 combination includes FB41T Top Bolt with auxiliary fire latch. Provides a fire-listed application without a bottom bolt— meaning no floor prep for strike. The auxiliary fire latch, mounted in the door edge, releases under extremely high temperatures to keep the doors in alignment during a fire.

- UL Listed 20 minutes on 8'0" x 8'0" Opening

FB41T

Top Bolt Only

FB41B

Bottom Bolt Only

Dimensions:

Body Size: 1" Wide x 8-1/2" Long x 2" Deep
Guide Size: 1" Wide x 6" Long x 1/8" Thick
Strike Size: 15/16" Wide x 2-1/4" Long x 1/16" Thick
Rub Plate Size: 1-1/4" Wide x 1-11/16" Long x 3/64" Thick
Auxiliary Fire Latch Size: 1" Wide x 1-3/4" Long x 3-1/4" Deep

Constant Latching Flush Bolts - Metal Doors

FB50 Series for Metal Doors

- Constant Latching—inactive door remains latched until the active door is opened, releasing the automatic bottom bolt and then the top bolt can be manually released. Inactive door will relatch automatically when closed.
- Low Actuation Forces.
- UL Listed for Fire Doors.
- Fits standard ANSI A115.4 Door and Frame Preparations.
- Non-handed.
- Models with Auxiliary Fire Latch eliminates the bottom bolt and is UL Listed for Fire Doors.
- Finishes: US3, US4, US10, US10B, US32, US32D.
- Finished Cover Plates permit finish changes in stock or at job site.
- Bolts have 3/4" throw with a 7/8" vertical adjustment.
- Meets ANSI A156.3 Type 27.
- Standard Rod Length is 12", which is measured from the center of the flush bolt body to the bolt tip.
- Optional Dust Proof Strikes—DP1 or DP2, prevents dirt build-up assuring full engagement of bottom bolt.
- Optional rod lengths available for top bolt for non-fire rated openings—18", 24", 36" and 48".

FB51P Pair **Top and Bottom Bolts** FB51P combines FB51T constant latching top bolt with FB31B automatic bottom bolt. Non-handed.	**FB52** **Top Bolt with Auxiliary Fire Latch** FB52 combination includes FB51T Top Bolt with auxiliary fire latch. Provides a fire-listed application without a bottom bolt—meaning no floor prep for strike. The auxiliary fire latch, mounted in the door edge, releases under extremely high temperatures to keep the doors in alignment during a fire.	**FB53** **Top Bolt with Auxiliary Fire Latch and Retrofit Plate** FB53 used to update existing flush bolt installations with auxiliary fire latch eliminating bottom bolt and floor strike. FB53 consists of FB51T top bolt, auxiliary fire latch and filler plate to cover existing cutout when bottom bolt is removed.	**FB51T** **Top Bolt Only**
• UL Listed 3 hours on 8'0" x 10'0" Opening.	• UL Listed 3 hours on 8'0" x 8'0" Opening.	• UL Listed 3 hours on 8'0" x 8'0" Opening.	

Dimensions:

Body Size: 1" Wide x 6-3/4" Long x 2" Deep
Guide Size: 1" Wide x 1-27/32" Long x 11/16" High x 3/32" Thick
Strike Size: 15/16" Wide x 2-1/4" Long x 1/16" Thick
Rub Plate Size: 1-1/4" Wide x 1-11/16" Long x 3/64" Thick
Auxiliary Fire Latch Size: 1" Wide x 1-3/4" Long x 3-1/4" Deep
Filler Plate Size: 1" Wide x 6-3/4" Long x 3/32" Thick

Constant Latching Flush Bolts - Wood Doors

FB60 Series for Wood Doors

- Constant Latching—inactive door remains latched until the active door is opened, releasing the automatic bottom bolt and then the top bolt can be manually released. Inactive door will relatch automatically when door closes.
- Low Actuation Forces.
- UL Listed for Fire Doors.
- Non-handed.
- Models with Auxiliary Fire Latch eliminates the bottom bolt and is UL Listed for Fire Doors.
- Finishes: US3, US4, US10, US10B, US32, US32D.
- Finished Cover Plates permit finish changes in stock or at job site.
- Bolts have 3/4" throw with a 7/8" vertical adjustment.
- Meets ANSI A156.3 Type 27.
- Optional Dust Proof Strikes—DP1 or DP2, prevents dirt build-up assuring full engagement of bottom bolt.

FB61P Pair

Top and Bottom Bolts

FB61P combines FB61T constant latching top bolt with FB41B bottom bolt.

- UL Listed 90 minutes on 8'0" x 8'0" Opening

FB62

Top Bolt with Auxiliary Fire Latch

FB62 combination includes FB61T top bolt with Auxiliary Fire Latch. Provides a fire-listed application without a bottom bolt—meaning no floor prep for strike. The Auxiliary Fire Latch, mounted in the door edge, releases under extremely high temperatures to keep the doors in alignment during a fire.

- UL Listed 20 minutes on 8'0" x 8'0" Opening

FB61T

Top Bolt Only

Dimensions:

Body Size: 1" Wide x 8-1/2" Long x 2" Deep
Guide Size: 1" Wide x 6" Long x 1/8" Thick
Strike Size: 15/16" Wide x 2-1/4" Long x 1/16" Thick
Rub Plate Size: 1-1/4" Wide x 1-11/16" Long x 3/64" Thick
Auxiliary Fire Latch Size: 1" Wide x 1-3/4" Long x 3-1/4" Deep

Manual Flush Bolts - Metal Doors

FB256N, FB257N, and FB258N Series for Metal Doors

- When the active door is opened, the lever can be moved to the 'up' position, retracting the bolt and allowing the inactive leaf to be opened. When the inactive leaf is closed, the lever can be moved to the 'down' position, projecting the bolt into the strike and securely locking the inactive leaf.
- Simplified installation in metal frames. Round bolt head requires only a punched hole. Use of strike optional. Special design of guide and flat sided bolt tip to prevent bolt rotation.
- Non-handed.
- Brass Finishes: B3, B4, B5, B10, B10B, B14, B15, B15A, B26, B26D
- Bolt tip is 1/2" Diameter.
- Bolts have 3/4" throw with a bolt backset of 3/4".
- Standard Rod Length is 12", which is measured from the center of the flush bolt body to the bolt tip.
- Meets ANSI/BHMA A156.16, L04251.
- Optional Dust Proof Strikes — prevents dirt build-up assuring full engagement of bottom bolt.
- Optional rod lengths available: 6", 9", 18", 24", 30", 36" and 48".

FB256N

Top or Bottom Bolt

FB257N

Top or Bottom Bolt

FB258N

Top or Bottom Bolt

Dimensions:

Body Size: FB256N: 3/4" Wide x 6-3/8" Long x 1-1/8" Deep
FB257N: 1-1/4" Wide x 6-3/8" Long x 1-1/8" Deep
FB258N: 1" Wide x 6-3/8" Long x 1-1/8" Deep
Guide Size: 1" Wide x 2" Long x 5/64" Thick
Strike Size: 15/16" Wide x 2-1/4" Long x 5/64" Thick

Manual Flush Bolts - Wood Doors

FB358 Series for Wood Doors

- When the active door is opened, the lever can be moved to the 'up' position, retracting the bolt and allowing the inactive leaf to be opened. When the inactive leaf is closed, the lever can be moved to the 'down' position, projecting the bolt into the strike and securely locking the inactive leaf.
- Reduces installation costs; requires only simple router mortise at top and bottom corners of doors.
- Door strength and rigidity maintained by tying door faces to reinforcing extensions on guide with machine screws and bearing washers.
- UL Listed for Fire Doors.
- Non-handed.
- Brass Finishes: B3, B4, B5, B10, B10B, B14, B15, B15A, B26, B26D.
- Bolts have 3/4" throw with a 7/8" vertical adjustment.
- Meets ANSI/BHMA A156.16, L04261.
- Optional Dust Proof Strikes—DP1 or DP2, prevents dirt build-up assuring full engagement of bottom bolt.
- Not available for rabbeted door installations.

FB358

Top or Bottom Bolts

- UL Listed 90 minutes on 8'0" x 10'0" Opening

Dimensions:

Body Size: 1" Wide x 6-3/4" Long x 1-3/8" Deep
Guide Size: 1" Wide x 2-1/2" Long x 5/64" Thick
Strike Size: 15/16" Wide x 2-1/4" Long x 5/64" Thick

Manual Flush Bolts - Metal Doors

FB457 and FB457N Series for Metal Doors

- When the active door is opened, the lever can be moved to the 'up' position, retracting the bolt and allowing the inactive leaf to be opened. When the inactive leaf is closed, the lever can be moved to the 'down' position, projecting the bolt into the strike and securely locking the inactive leaf.
- Simplified installation in metal frames. Round bolt head requires only a punched hole. Use of strike optional. Special design of guide and flat sided bolt tip to prevent bolt rotation.
- Non-handed.
- FB457 UL Listed for Fire Doors.
- FB457N not UL Listed for Fire Doors.
- Brass Finishes: B3, B4, B5, B10, B10B, B14, B15, B15A, B26, B26D.
- Bolt tip is 1/2" Diameter.
- Bolts have 3/4" throw with a bolt backset of 3/4".
- Standard Rod Length is 12", which is measured from the center of the flush bolt body to the bolt tip.
- Meets ANSI/BHMA A156.16, L04251.
- Optional Dust Proof Strikes — prevents dirt build-up assuring full engagement of bottom bolt.
- Optional rod lengths available for FB457: 6", 9", 18" and 24".
- Optional rod lengths available for FB457N: 6", 9", 18", 24", 30", 36" and 48".

FB457

Top or Bottom Bolt

- UL Listed 3 hours on 8'0" x 10'0" Opening

FB457N

Top or Bottom Bolt

Dimensions:

Body Size: 1-1/4" Wide x 6-3/4" Long x 1-1/8" Deep
Guide Size: 1" Wide x 2" Long x 5/64" Thick
Strike Size: 15/16" Wide x 2-1/4" Long x 5/64" Thick

Manual Flush Bolts - Metal Doors

FB458, FB458N and FB0458N Series for Metal Doors

- When the active door is opened, the lever can be moved to the 'up' position, retracting the bolt and allowing the inactive leaf to be opened. When the inactive leaf is closed, the lever can be moved to the 'down' position, projecting the bolt into the strike and securely locking the inactive leaf.
- Simplified installation in metal frames. Round bolt head requires only a punched hole. Use of strike optional. Special design of guide and flat sided bolt tip to prevent bolt rotation.
- FB458 UL Listed for Fire Doors.
- FB458N and FB0458N not UL Listed for Fire Doors.
- FB0458N features 1/4" radius corners on body.
- Non-handed.
- Brass Finishes: B3, B4, B5, B10, B10B, B14, B15, B15A, B26, B26D.
- Bolt tip is 1/2" diameter.
- Bolts have 3/4" throw with a bolt backset of 3/4".
- Standard Rod Length is 12", which is measured from the center of the flush bolt body to the bolt tip.
- Meets ANSI/BHMA A156.16, L04251.
- Optional Dust Proof Strikes— prevents dirt build-up assuring full engagement of bottom bolt.
- Optional Rod Lengths available for FB458: 6", 9", 18" and 24".
- Optional Rod Lengths available for FB458N and FB0458N: 6", 9", 18", 24", 30", 36" and 48".

FB458

Top or Bottom Bolt

- UL Listed 3 hours on 8'0" x 10'0" Opening

FB458N

Top or Bottom Bolt

FB0458N

Top or Bottom Bolt

Dimensions:

Body Size: 1" Wide x 6-3/4" Long x 1-1/8" Deep
Guide Size: 1" Wide x 2" Long x 5/64" Thick
Strike Size: 15/16" Wide x 2-1/4" Long x 5/64" Thick

Dust Proof Strikes

DP1 and DP2 Dust Proof Strikes

- Designed for use with the bottom bolt of all flush bolts.
- Spring-loaded plunger returns to floor or threshold level anytime flush bolt is retracted, eliminating need to clean standard floor strikes.
- Meets ANSI/BHMA 156.16, L14011.
- Finishes: US3, US4, US10, US10B, US26, US26D.

Dimensions:

DP1 Face Plate: 1-7/16" Diameter
DP2 Face Plate: 1-5/8" Wide x 3-1/2" Long x 1/8" Thick
DP1 and DP2 Body: 1-3/16" Diameter x 1-7/8" Deep

DP1

Threshold only.

DP2

Floor and/or threshold.

DP3 and DP4 Dust Proof Strikes

- Designed for use with the bottom bolt of the Ives extension flush bolts on non-fire rated openings. DP3 for installation in thresholds up to 1/4" thick. DP4 includes plate for installation in thresholds or floor.
- 3/4" diameter plunger accepts up to 5/8" diameter round bolts or 1/2" square bolts.
- Can be locked in up position by rotating plunger with screwdriver or coin. Eliminates trapping of spiked heels.
- Made from polished wrought brass.
- Brass Finishes: B3, B4, B5, B10, B10B, B14, B15, B15A, B26, B26D.

Dimensions:

DP3 Faceplate: 1-3/8" Diameter
DP4 Faceplate: 1-5/8" Wide x 3-1/2" Long x 1/8" thick
DP3 and DP4 Body: 1-61/64" Overall Depth, Fits Hole 1-1/16" in Diameter

DP3

Threshold only.

DP4

Floor and/or threshold.

Manual Flush Bolts

260 Series

- Designed with face plate rounded for simple, one-step router installation.
- Steel bolt head in nylon bushing combined with dual action spring lock to hold bolt projected or retracted provides easy, one-finger operation.
- Economically priced for the volume builder.
- Made from polished wrought brass.
- Finishes: B3, B4, B5, B10, B10B, B14, B15, B15A, B19, B26, B26D.

Dimensions:

Body Size: 3/4" Wide x 6-3/4" Long x 5/8" Deep
Strike Size: 5/8" Wide x 1-1/2" Long
Rod Backset: 3/8"
Diameter of Bolt Head: 5/16"
Throw: 3/4"

261 Series

- An exceptionally smooth working flush bolt with sharp, crisp lines.
- Double action spring design provides automatic holding of brass bolt in projected or retracted position, and assures ease of operation in conjunction with deep cup finger hole.
- Made from polished cast brass.
- Finishes: B3, B4, B5, B10, B10B, B14, B15, B15A, B19, B26, B26D.

Dimensions:

Body Size: 3/4" Wide x 4" Long x 1-1/8" Deep
Strike Size: 5/8" Wide x 1-1/2" Long
Rod Backset: 15/32"
Diameter of Bolt Head: 5/16"
Throw: 3/4"

262 Series

- An exceptionally smooth working flush bolt with sharp, crisp lines.
- Double action spring design provides automatic holding of brass bolt in projected or retracted position, and assures ease of operation in conjunction with deep cup finger hole.
- Made from polished cast brass.
- Finishes: B3, B4, B5, B10, B10B, B14, B15, B15A, B19, B26, B26D.

Dimensions:

Body Size: 3/4" Wide x 6" Long x 1-11/32" Deep
Strike Size: 7/8" Wide x 1-3/4" Long
Rod Backset: 15/32"
Diameter of Bolt Head: 1/2"
Throw: 1"

263 Series

- A compact flush bolt designed specifically for easy, low cost installation.
- Rounded faceplate and lip for simplified installation.
- Double action spring design provides automatic holding of brass bolt in projected or retracted position, and assures ease of operation in conjunction with deep cup finger hole.
- Made from polished cast brass.
- Finishes: B3, B4, B5, B10, B10B, B14, B15, B15A, B19, B26, B26D.

Dimensions:

Body Size: 3/4" Wide x 5" Long x 1-1/2" Deep
Strike Size: 5/8" Wide x 1-1/2" Long
Rod Backset: 15/32"
Diameter of Bolt Head: 5/16"
Throw: 3/4"

Manual Flush Bolts

264 Series

- A compact flush bolt designed specifically for fast, low cost installation.
- Same rounded faceplate and lip as the 263 Flush Bolt for simplified installation.
- Extra long lip permits installation in a variety of door contraction designs
- Double action spring design provides automatic holding of brass bolt in projected or retracted position, and assures ease of operation in conjunction with deep cup finger hole.
- Made from polished cast brass.
- Finishes: B3, B4, B5, B10, B10B, B14, B15, B15A, B19, B26, B26D

Dimensions:

Body Size: 3/4" Wide x 4-1/2" Long x 1-3/4" Deep
Strike Size: 5/8" Wide x 1-1/2" Long
Rod Backset: 15/32"
Diameter of Bolt Head: 5/16"
Throw: 3/4"

265 Series

- A flush bolt with radiused bottom faceplate designed specifically for simple one-step router installation.
- Double action spring design provides automatic holding of brass bolt in projected or retracted position, and assures ease of operation in conjunction with deep cup finger hole.
- Faceplate is polished solid brass; bolt is made from aluminum zinc alloy.
- Finishes: B3, B4, B5, B10, B10B, B14, B15, B15A, B19, B26, B26D.

Dimensions:

Body Size: 3/4" Wide x 6" Long x 1-7/16" Deep
Strike Size: 7/8" Wide x 1-3/4" Long
Rod Backset: 1/2"
Diameter of Bolt Head: 1/2"
Throw: 1"

266 Series

- Same as the 265 Flush Bolt except with square bottom faceplate.
- Double action spring design provides automatic holding of brass bolt in projected or retracted position, and assures ease of operation in conjunction with deep cup finger hole.
- Faceplate is polished solid brass; bolt is made from aluminum zinc alloy.
- Finishes: B3, B4, B5, B10, B10B, B14, B15, B15A, B19, B26, B26D.

Dimensions:

Body Size: 3/4" Wide x 6" Long x 1-7/16" Deep
Strike Size: 7/8" Wide x 1-3/4" Long
Rod Backset: 1/2"
Diameter of Bolt Head: 1/2"
Throw: 1"

Coordinators - Bar Coordinators and Filler Bars

COR Series Bar Coordinators

- The COR Series Coordinators are designed for use on pairs of doors when one door needs to close before the other.
- All COR units function easily. The active door lever, located nearest to the active stop, holds the active door open until the trigger mechanism is released by the closing of the inactive leaf.
- All COR units are equipped with an override feature which allows the active door to close under extreme pressure.
- All COR units are compatible with Flush Bolts.
- The COR Series is available in five sizes for variable door opening widths.
- The COR Series does not cover the entire length of the stop, so a filler bar can be provided to maintain architecturally clean lines.
- COR Series Coordinator Channels and fillers are made of aluminum and are normally furnished in a US28 finish. Also available in US26D, and 315AN (Black).
- Meets ANSI/BHMA A156.3, Type 21A.
- UL Listed for installation on labeled frame.
- Optional Filler Bars: FL20, FL32 and FL44, available to maintain clean line.
- Optional Mounting Brackets available: MB1, MB2, MB1F, MB2F, MB3F, MB1V, MB2V, and MB3V for other stop applied hardware.

Dimensions: 1-5/8" Wide x 5/8" Deep x Ordered Length

For Openings Where Doors Are Same Size

Coordinator Number	Length of Channel	For Opening Widths	Common Applications
COR32	32"	34" - 52"	Pair of 2'0" Doors
COR42	42"	52" - 72"	Pair of 2'6" Doors
COR52	52"	62" - 92"	Pair of 3'0" Doors
COR60	60"	70" - 108"	Pair of 3'6" Doors
COR72	72"	84" - 132"	Pair of 4'0" Doors

For Openings Where Doors Are Unequal Size

The coordinator length should equal the active door width plus approximately 1/2 the inactive door width. The coordinator must be 6" longer than the active door width and shorter than the overall frame opening between stops.

FL Series Filler Bars

- The FL Filler Bars are available in three sizes for variable frame openings.
- FL Filler Bars are made of aluminum and are normally furnished in a US28 finish. Also available in US26D and 315AN (Black).
- FL Filler Bars are field sized to frame opening.

Filler Bar Number	Length
FL20	20"
FL32	32"
FL44	44"

Dimensions: 1-5/8" Wide x 5/8" Deep x Ordered Length

Coordinators - Mounting Brackets

Mounting Brackets

MB1 and **MB2**

- Allows stop mounted hardware to be properly installed without damaging the COR coordinator, such as a parallel arm closer or a non-fire-rated surface vertical rod strike.
- Stop mounted hardware will need to be lowered to compensate for the height of the coordinator and mounting bracket.
- MB mounting brackets are made of aluminum and normally furnished in a USP finish. Powder Coated Finishes: SP28 and SPBLK.

MB1

MB2

Product	Jamb Depth	Stop Width
MB1	4-3/4" Min.	Over 2-1/2"
MB2	4-3/4" Min.	Up to 2-1/2"

Dimensions:

MB1: 4" Wide x 3" Deep x 15/16" Tall
MB2: 4" Wide x 3-1/4" Deep x 1-5/8" Tall

MB1F, MB2F and **MB3F**

- Allows stop mounted hardware to be properly installed without damaging the COR coordinator. Example: strike for fire-rated surface vertical rod exit device.
- Stop mounted hardware will need to be lowered to compensate for the height of the coordinator and mounting bracket.
- MBF mounting brackets are made of 3/8" thick steel and normally furnished in a USP finish. Powder Coated Finishes: SP28 and SPBLK.

MB1F

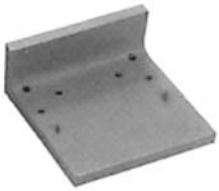

MB2F

MB3F

Product	Jamb Depth	Stop Width
MB1F	5" Min.	1-1/2" to 2-1/4"
MB2F	5-7/8" Min.	2-3/8" to 3-1/4"
MB3F	6-7/8" Min.	3-3/8" and Wider

Dimensions:

MB1F: 4" Wide x 3" Deep x 1-5/8" Tall
MB2F: 4" Wide x 4" Deep x 1-5/8" Tall
MB3F: 4" Wide x 3-1/2" Deep x 1" Tall

MB1V, MB2V and **MB3V** (not shown)

Same as MB1F, MB2F and MB3F with factory preparation for the Von Duprin 8827-F soffit latch.

Coordinators

Special Factory Preparation for Use with Vertical Rod Exit Devices

- Coordinators may need to be prepared at the factory for use with some surface and concealed vertical rod exit devices. (See Chart below)
- If exit device not listed in chart, the information shown on the illustration will be needed.

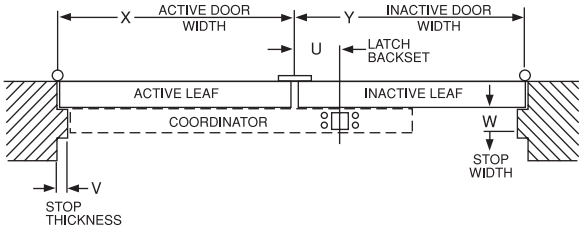

1. Exit Device Manufacturer and Model No.
2. Active Net Door Size, “X”
3. Inactive Net Door Size, “Y”
4. Exit Device Backset, “U”
5. Stop Width, “W”
6. Stop Thickness if other than 5/8", “V”

Exit Device Manufacturer	Exit Device Number	Device Backset	Maximum Active Door	Coordinator Size Needed	Coordinator Cutout Type	Mounting Bracket Needed
Von Duprin	5547-F	2-3/8"	33" 43" 51" 63"	42" 52" 60" 72"	A	None
Von Duprin	8827-F	2-3/4"	33" 43" 51" 63"	42" 52" 60" 72"	B	MB1V, MB2V or MB3V
Von Duprin	8847-F	2-3/8"	33" 43" 51" 63"	42" 52" 60" 72"	C	None
Von Duprin	33/3547 33/3547-F 98/9947 98/9947-F	2-3/4"	33" 43" 51" 64"	42" 52" 60" 72"	D	None
Von Duprin	33/3548 33/3548-F 98/9948 98/9948-F	2-3/4"	33" 43" 51" 64"	42" 52" 60" 72"	D	None
Von Duprin	33/3547WDC 33/3547WDC-F 98/9947WDC 98/9947WDC-F	1-5/16"	34" 44" 52" 65"	42" 52" 60" 72"	E	None
Monarch	17-C F-17-C 18-C F-18-C XX-C F-XX-C	2-3/4"	33" 43" 51" 63"	42" 52" 60" 72"	F	None
Monarch	17-C-WDC F-17-C-WDC 18-C-WDC F-18-C-WDC XX-C-WDC F-XX-C-WDC	2-13/16"	33" 43" 51" 63"	42" 52" 60" 72"	G	None

Ordering Guide for Bar Coordinators

How to Order COR and Accessories

COR 52 - US28 - FL20 - D - 36" - 2-MB2

COR Size:
32, 42, 52, 60, 72

Finishes:
US28, US26D, 315AN (Black)

Filler Bar (if desired):
FL20, FL32, FL44

Vertical Rod Exit Device Cutout Type (if applicable):
A, B, C, D, E, F, G
If other Vertical Rod Exit Device not listed on chart, from page A14, include information as shown on page A14.

Net Active Door Size – Required for ALL Vertical Rod Exit Device Applications

Mounting Bracket:
Indicate quantity, then bracket. MB1, MB2, MB1F, MB2F, MB3F, MB1V, MB2V, MB3V
Mounting brackets are sold and packaged separately from coordinators.

To determine the size COR you need:

1. Start with the active door size (X).
2. Next consider the overall frame opening between stops (F).
3. Preferably, the coordinator would equal the active door width (X) + approximately 1/2 inactive door width (Y). Keep in mind the coordinator must be 6" longer than the active door width (X) and less than the overall frame opening between stop (F).

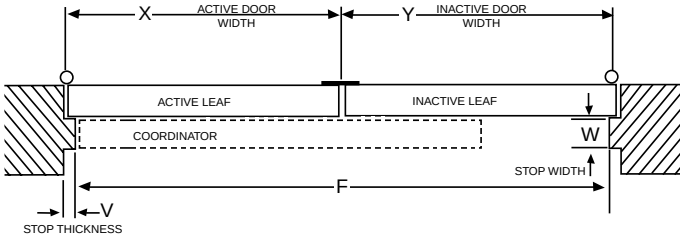

Examples:

- Pair of 30" Doors, 5/8" Stops
  Active Door Size, X = 30"
  Overall Frame Opening between Stops, F = 58-3/4"
  Recommended Coordinator: COR42

- Pair of 36" Doors, 5/8" Stops
  Active Door Size, X = 36"
  Overall Frame Opening between Stops, F = 70-3/4"
  Recommended Coordinator: COR52

- 36" Active Door, 18" Inactive door, 5/8" Stops
  Active Door Size, X = 36"
  Overall Frame Opening between Stops, F = 52-3/4"
  Recommended Coordinator: COR42

- 48" Active Door, 24" Inactive Door, 5/8" Stops
  Active Door Size, X = 48"
  Overall Frame Opening between Stops, F = 94-3/4"
  Recommended Coordinator: COR60

COR7G and COR9G Gravity Coordinators

Features:

- When active door is open, coordinator prevents active door from closing until inactive door bypasses. Closing of inactive door causes strike plate on top of door to contact cam and lift arm, allowing active door to close. As inactive door continues closing, roller rides over strike plate on to door bracket, holding arm above active door.
- UL Listed for Fire Doors.
- Non-handed.
- Gravity action arm and door bracket are adjustable on the job for ease of installation. Nylon roller provides quiet and efficient operation, and helps protect the astragal and doors from damage.
- Nylon roller on short arm glides smoothly over door bracket and strike, ensuring silent operation.
- Made of forged brass.
- Finishes: US3, US4, US10, US10B, US26, US26D.
- Meets ANSI/BHMA A156.3, Type 21.

CORG7

7" Projection

- Use on pairs of doors with astragal on active door up to 4'.
- With astragal, inactive door up to 3'4".
- With astragals, both doors up to 2'10".

CORG9

9" Projection

- Use on pairs of doors with astragal on active door over 4'.
- With astragal, inactive door over 3'4".
- With astragals, both doors over 2'10".

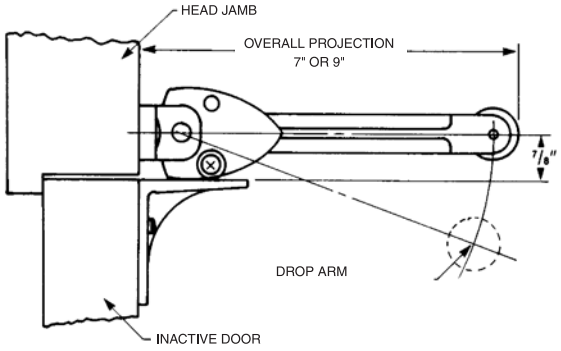

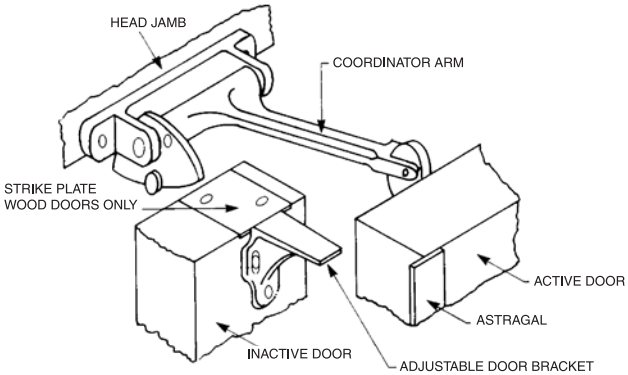

CB1 Carry Bar

Features:
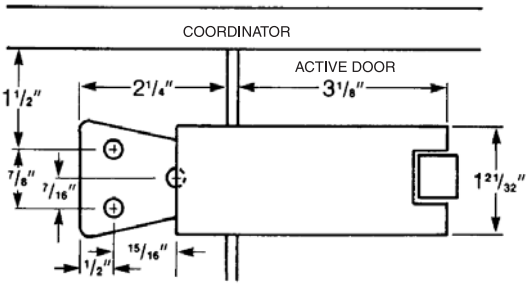
- Used when it is possible for the inactive door to be opened before the active door.
- Prevents damage to the doors and other hardware.
- Nylon roller insures quiet and efficient operation.
- Non-handed.
- All-steel construction.
- Finishes: USP, US3, US4, US10, US10B, US26, US26D.
- Meets ANSI/BHMA A156.3, Type 21.
- Standard sex bolts for mounting.