Architectural Door Trim

8100 Series Door Pulls

- Made from the finest architectural brass, stainless steel and aluminum available.
- Each pull is carefully machined, polished and inspected before being individually wrapped and packaged.
- Door pulls are packed with standard type fasteners for 1-3/4" doors. For special mounting methods other than standard, see pages C11 - C13.
- For sizes and finishes not listed in this catalog, contact our Customer Service Department for availability.

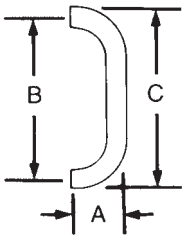

8102 Door Pull

Prod. No.	Proj. "A"	Center to Center "B"	Overall Length "C"
8102-6	2-1/4"	6"	6-3/4"
8102-8	2-1/4"	8"	8-3/4"
8102-0	2-1/4"	10"	10-3/4"

How to Order

8102 - ___ - ___ - ___

Size:
- **6** for 6"
- **8** for 8"
- **0** for 10"

Finishes:
US3, US4, US5, US10, US10B, US15, US15A, US26, US26D, US28, US32, US32D

Mounting Type:
- **Blank** standard
- **F** Concealed wood door w/push plate (special)
- **H** Concealed metal door (special)
- **I** Concealed wood door
- **J** Back to back pulls, furnished is pairs (PR) unless single pull (SGL) specified

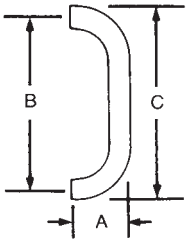

8103 Door Pull

Prod. No.	Proj. "A"	Center to Center "B"	Overall Length "C"
8103-8	2-1/2"	8"	9"
8103-0	2-1/2"	10"	11"
8103-2	2-1/2"	12"	13"

How to Order

8103 - ___ - ___ - ___

Size:
- **8** for 8"
- **0** for 10"
- **2** for 12"

Finishes:
US3, US4, US5, US10, US10B, US15, US15A, US26, US26D, US28, US32, US32D

Mounting Type:
- **Blank** standard
- **F** Concealed wood door w/push plate (special)
- **H** Concealed metal door (special)
- **I** Concealed wood door
- **J** Back to back pulls, furnished in pairs (PR) unless single pull (SGL) specified

8100 Series Door Pulls

- Made from the finest architectural brass, stainless steel and aluminum available.
- Each pull is carefully machined, polished and inspected before being individually wrapped and packaged.
- Door pulls are packed with standard type fasteners for 1-3/4" doors. For special mounting methods other than standard, see pages C11 - C13.
- For sizes and finishes not listed in this catalog, contact our Customer Service Department for availability.

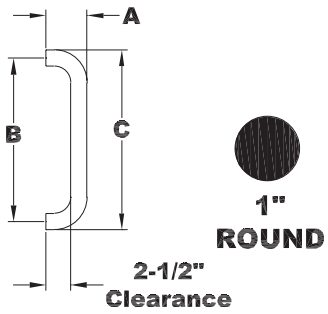

8103EZ Door Pull - Large 2-1/2" Clearance for the Physically Impaired

Prod. No.	Proj. "A"	Center to Center "B"	Overall Length "C"
8103EZ	3-1/2"	8"	9"
8103EZ	3-1/2"	10"	11"
8103EZ	3-1/2"	12"	13"

How to Order

8103EZ - ___ - ___ - ___

Size:
8 for 8"
0 for 10"
2 for 12"

Finishes
US3, US4, US10, US10B, US15, US15A
US26, US26D, US28, US32, US32D

Mounting Type:

Blank	Standard
L	Surface Concealed Two-Anchor
M	Back-To-Back with Spanner Collar. Furnished in Pairs. (PR)
M1	Single (SGL) Pull. Back-to-back With Spanner Collar. RH Thread.
M2	Single (SGL) Pull. Back-to-back With Spanner Collar. LH Thread.
N	Back-to-Back Two-Anchor. Furnished in Pairs. (PR)
N2	Single (SGL) Pull, Back-to-Back Two Anchor.
O	Decorative Blind Thru-Bolt

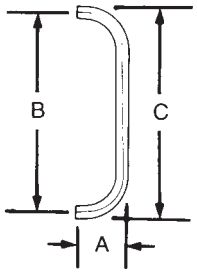

8105 Door Pull

Prod. No.	Proj. "A"	Center to Center "B"	Overall Length "C"
8105-6	2"	6"	6-1/2"
8105-8	2"	8"	8-1/2"
8105-0	2"	10"	10-1/2"

How to Order

8105 - ___ - ___ - ___

Size:

6	for 6"
8	for 8"
0	for 10"

Finishes:
US3, US4, US5, US10, US10B, US15, US15A, US26, US26D, US28, US32, US32D

Mounting Type:

Blank	Standard
F	Concealed wood door w/push plate (special)

8100 Series Door Pulls

- Made from the finest architectural brass, stainless steel and aluminum available.
- Each pull is carefully machined, polished and inspected before being individually wrapped and packaged.
- Door pulls are packed with standard type fasteners for 1-3/4" doors. For special mounting methods other than standard, see pages C11 - C13.
- For sizes and finishes not listed in this catalog, contact our Customer Service Department for availability.

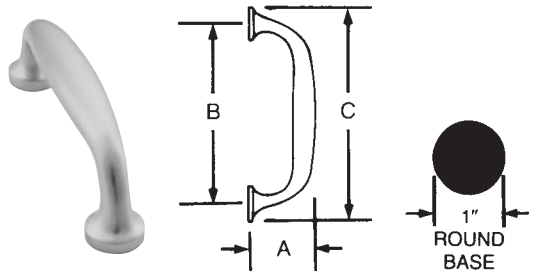

8111-5 Door Pull

Prod. No.	Proj. "A"	Center to Center "B"	Overall Length "C"
8111-5	1-13/16"	5-1/4"	6-1/4"

How to Order

8111-5 - ____ - ____

Finishes:
US3, US4, US5, US10, US10B, US15, US15A, US26, US26D, US28, US32, US32D

Mounting Type:
- **Blank** Standard
- **F** Concealed wood door w/push plate (special)
- **G** Concealed w/pull plate

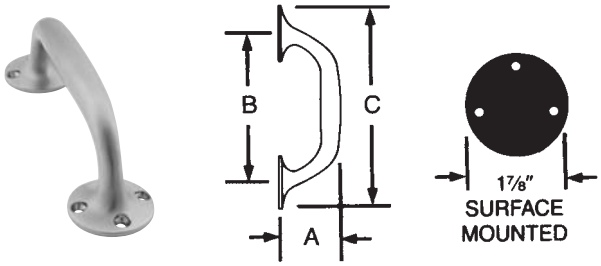

8112 Door Pull

Prod. No.	Proj. "A"	Center to Center "B"	Overall Length "C"
8112-5	2-3/16"	5-5/8"	7-1/2"

How to Order

8112-5 - ____

Finishes:
US3, US4, US10, US10B, US15, US15A, US26, US26D, US28

8100 Series Door Pulls

- Made from the finest architectural brass, stainless steel and aluminum available.
- Each pull is carefully machined, polished and inspected before being individually wrapped and packaged.
- Door pulls are packed with standard type fasteners for 1-3/4" doors. For special mounting methods other than standard, see pages C11 - C13.
- For sizes and finishes not listed in this catalog, contact our Customer Service Department for availability.

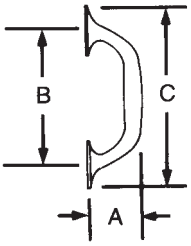

8113 Door Pull

Prod. No.	Proj. "A"	Center to Center "B"	Overall Length "C"
8113-5	2-3/16"	5-5/8"	7-1/2"

How to Order

8113-5 - ____ - ____

Finishes:
US3, US4, US10, US10B, US15, US15A, US26, US26D, US28

Mounting Type:
Blank Standard
F Concealed wood door w/push plate (special)

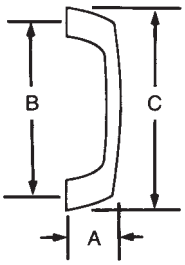

8114 Door Pull

Prod. No.	Proj. "A"	Center to Center "B"	Overall Length "C"
8114-5	1-11/16"	5-1/4"	6-3/16"

How to Order

8114-5 -_____ - ____

Finishes:
US3, US4, US10, US10B, US15, US15A, US26, US26D, US28, US32D

Mounting Type:
Blank Standard
F Concealed wood door w/push plate (special)
G Concealed w/pull plate

Architectural Door Trim

8100 Series Door Pulls

- Made from the finest architectural brass, stainless steel and aluminum available.
- Each pull is carefully machined, polished and inspected before being individually wrapped and packaged.
- Door pulls are packed with standard type fasteners for 1-3/4" doors. For special mounting methods other than standard, see pages C11 - C13.
- For sizes and finishes not listed in this catalog, contact our Customer Service Department for availability.

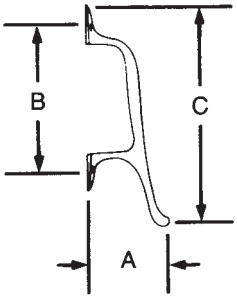

8121 Door Pull

Prod. No.	Proj. "A"	Center to Center "B"	Overall Length "C"
8121-5	3-1/2"	5-3/4"	8-3/4"

How to Order

8121-5 - ____ - ____

Finishes:
US3, US10, US10B, US15, US15A, US26, US26D, US28

Mounting Type:

Blank	Standard
F	Concealed wood door w/push plate (special)
K	Back to back pulls. Furnished is Pairs (PR).

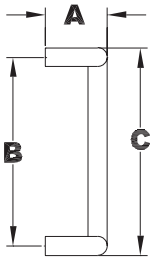

8190 90° Offset Door Pull

Prod. No.	Proj. "A"	Center to Center "B"	Overall Length "C"
8190	3-1/4"	8"	9"
8190	3-1/4"	10"	11"
8190	3-1/4"	12"	13"
8190	3-1/4"	18"	19"

How to Order

8190 - ___ - ___ - ___

Size:
8 for 8"
0 for 10"
2 for 12"
18 for 18"

Finishes
US3, US4, US10, US10B, US15, US15A, US26, US26D, US32, US32D

Mounting Type:

Blank	Standard
L	Surface Concealed Two-Anchor
M	Back-To-Back with Spanner Collar. Furnished in Pairs. (PR)
M1	Single (SGL) Pull. Back-to-Back With Spanner Collar. RH Thread.
M2	Single (SGL) Pull. Back-to-Back With Spanner Collar. LH Thread.
N	Back-to-Back Two-Anchor. Furnished in Pairs. (PR)
N2	Single (SGL) Pull, Back-to-Back Two Anchor.
O	Decorative Blind Thru-Bolt

9100 Series Push Bars and Pulls

- Made from the finest architectural brass and stainless steel.
- Each pushbar and pull is carefully machined, polished and inspected before being individually wrapped and packaged.
- Pushbars and pulls are packed with standard type fasteners for 1-3/4" doors. For special mounting methods, see pages C11 - C13.
- For sizes and finishes not listed in this catalog, contact Customer Service for availability.

1"
ROUND

9100 Pushbar

Prod No.	Proj.	Center to Center	Overall Length
9100	2-1/2"	28"	29"
9100	2-1/2"	33"	34"

* For other length pushbars, contact customer service for avaliability

* Caution - Please be sure that the length pushbar you order does not interfere with the door jamb or cause a pinch point

How to Order

9100 - ___ - ___ - ___

Size Push:
28, 33

Finishes
US3, US4,
US32, US32D

Mounting Type:
NS Standard (Type N and Standard)
NO Decorative (Type N and Type O)

To Determine Pushbar Center-To-Center
Flush Door - Door width minus 5"
Stile & Rail Door - Door width minus width of one stile

1"
ROUND

9103 Straight Pull/Pushbar Combo (8103 pull + 9100 push)

Prod No.	CTC Push	CTC Pull	Proj Push&Pull
9103	28", 33"	8"	2-1/2" & 2-1/2"
9103	28", 33"	10"	2-1/2" & 2-1/2"
9103	28", 33"	12"	2-1/2" & 2-1/2"

* For other length pushbars, contact customer service for avaliability

* Caution - Please be sure that the length pushbar you order does not interfere with the door jamb or cause a pinch point

How to Order

9103 - ___ - ___ - ___ - ___

Size Push:
28, 33

Size Pull
8 for 8", 0 for 10", 2 for 12"

Finishes
US3, US4,
US32, US32D

Mounting Type:
NS Standard (Type N and Standard)
NO Decorative (Type N and Type O)

To Determine Pushbar Center-To-Center
Flush Door - Door width minus 5"
Stile & Rail Door - Door width minus width of one stile

9100 Series Push Bars and Pulls

- Made from the finest architectural brass and stainless steel.
- Each pushbar and pull is carefully machined, polished and inspected before being individually wrapped and packaged.
- Pushbars and pulls are packed with standard type fasteners for 1-3/4" doors. For special mounting methods, see pages C11 - C13.
- For sizes and finishes not listed in this catalog, contact Customer Service for availability.

1"
ROUND

9103EZ Straight Pull/Pushbar Combo (8103EZ Pull + 9100 Push)

Prod No.	CTC Push	CTC Pull	Proj Push&Pull
9103EZ	28", 33"	8"	2-1/2" & 3-1/2"
9103EZ	28", 33"	10"	2-1/2" & 3-1/2"
9103EZ	28", 33"	12"	2-1/2" & 3-1/2"

* For other length pushbars, contact customer service for avaliability

* Caution - Please be sure that the length pushbar you order does not interfere with the door jamb or cause a pinch point

How to Order

9103EZ - ___ - ___ - ___ - ___

Size Push:
28, 33

Size Pull
8 for 8", 0 for 10", 2 for 12"

Finishes
US3, US4,
US32, US32D

Mounting Type:
NS Standard (Type N and Standard)
NO Decorative (Type N and Type O)

To Determine Pushbar Center-To-Center
Flush Door - Door width minus 5"
Stile & Rail Door - Door width minus width of one stile

1"
ROUND

9190 Offset Pull/Pushbar Combo (8190 pull + 9100 push)

Prod No.	CTC Push	CTC Pull	Proj Push&Pull
9190	28", 33"	8"	2-1/2" & 3-1/4"
9190	28", 33"	10"	2-1/2" & 3-1/4"
9190	28", 33"	12"	2-1/2" & 3-1/4"
9190	28", 33"	18"	2-1/2" & 3-1/4"

* For other length pushbars, contact customer service for avaliability

* Caution - Please be sure that the length pushbar you order does not interfere with the door jamb or cause a pinch point

How to Order

9190 - ___ - ___ - ___ - ___

Size Push:
28, 33

Size Pull
8 for 8", 0 for 10", 2 for 12", 18 for 18"

Finishes
US3, US4,
US32, US32D

Mounting Type:
NS Standard (Type N and Standard)
NO Decorative (Type N and Type O)

To Determine Pushbar Center-To-Center
Flush Door - Door width minus 5"
Stile & Rail Door - Door width minus width of one stile

8200 Series Push Plates and 8300 Series Pull Plates

- Made from the finest architectural aluminum, brass, and stainless steel.
- For Push Plate sizes other than listed, contact our Customer Service Department or your local sales representative.
- All aluminum, brass, and stainless steel Push Plates meet ANSI A156.6 requirements for .050" thickness.
- Each Push Plate is packaged individually wrapped with mounting screws.
- For special mounting methods other than standard, see pages C11 - C13.

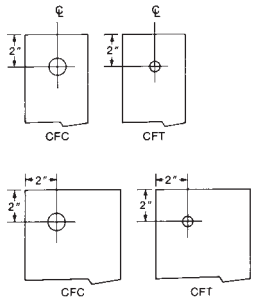

Push and Pull Plates Cut for Cylinder or Thumbturns

- All plates may be ordered with cutout for cylinder or thumbturn. Standard cutouts are positioned 2" from top of plate and centered on plates up to 4" wide or 2" from edge on plates over 4" wide. Specify hand of door when ordering cutout for plates wider than 4". On pull plates, if the pulls center-to-center dimension interferes with the cutout for the cylinder or thumbturn, please provide drawing of cutout location when ordering.
- Standard size for cylinder cutouts is 1-1/4" diameter and for thumbturn cutout is 3/8" diameter.
- When ordering, add suffix CFC for cut for cylinder, and CFT for cut for thumbturn to product number.

8200 Push Plate
8300 Pull Plate (less pull)

Available Sizes
3" x 12"
3.5" x 15"
4" x 16"
6" x 16"
8" x 16"

How to Order

8 ___ - ____ - ____ - ____ - ____

Model:
- **200** Push Plate,
- **300** Pull Plate, less pull

Hole Spacing: (for Pull Plate only)
- **5** for 5-1/4"
- **6** for 6"
- **8** for 8"
- **0** for 10"

Finishes:
US3, US4, US5, US10, US10B, US15, US15A, US26, US26D, US28, US32, US32D

Size:
3 x 12, 3-1/2 x 15, 4 x 16, 6 x 16, 8 x 16

Special Options: (specify handing for plates over 4" wide)
- **CFC** Cylinder cutout
- **CTC** Thumbturn cutout

8300 Series Pull Plates

- Made from the finest architectural aluminum, brass and stainless steel.
- For Pull Plate sizes other than listed, contact our Customer Service Department or your local sales representative.
- All aluminum, brass, and stainless steel Pull Plates meet ANSI A156.6 requirements for .050" thickness.
- Each Pull Plate is packaged individually wrapped with mounting screws.
- Pulls are centered on plates up to 4" wide and offset 2" from edge of plates wider than 4".
- For special mounting methods other than standard, see pages C11 - C13.

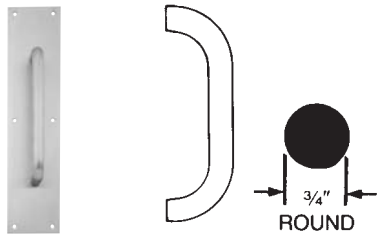

8302 Pull Plate

- 8300 Plate
  3-1/2" x 15"
  4" x 16"
  6" x 16"
- 8102 Pull
  6" centers
  8" centers
  10" centers

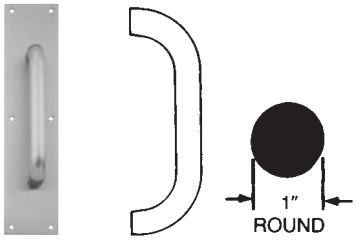

8303 and 8303EZ Pull Plate

- 8300 Plate
  3-1/2" x 15"
  4" x 16"
  6" x 16"
- 8103 Pull
  8" centers
  10" centers

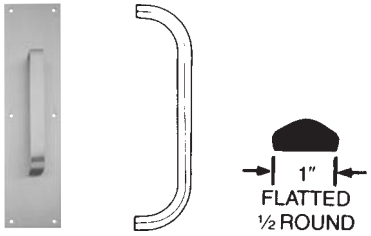

8305 Pull Plate

- 8300 Plate
  3-1/2" x 15"
  4" x 16"
  6" x 16"
- 8105 Pull
  6" centers
  8" centers
  10" centers

How to Order

83 ____ - ____ - _____ - _____ - ____ - ____

Pull Style:

02	for 8102
03	for 8103
05	for 8105

Pull Center to Center:

6	for 6" (not available on 8303)
8	for 8"
0	for 10"

Finishes:
US3, US4, US5, US10, US10B, US15, US15A, US26, US26D, US28, US32D

Size:
3-1/2" x 15", 4" x 16", 6" x 16"

Special Options: (Handing needed for 6" x 16", LH or RH)

CFC	Cylinder cutout
CTC	Thumbturn cutout

Mounting:

Blank	Standard
F	Concealed pull wood doors w/push plate (special. Not available 8303EZ.)
G	Concealed pull plate (Only available 8302, 8303 and 8303EZ)
I	Concealed pull wood door (not available 8305 and 8303EZ)
J	Back to back pull (not available 8305 and 8303EZ)

8300 Series Pull Plates

- Made from the finest architectural aluminum, brass and stainless steel.
- For Pull Plate sizes other than listed, contact our Customer Service Department or your local sales representative.
- All aluminum, brass and stainless steel Pull Plates meet ANSI A156.6 requirements for .050" thickness.
- Each Pull Plate is packaged individually wrapped with mounting screws.
- Pulls are centered on plates up to 4" wide and offset 2" from edge of plates wider than 4".
- For special mounting methods other than standard, see pages C11 - C13.

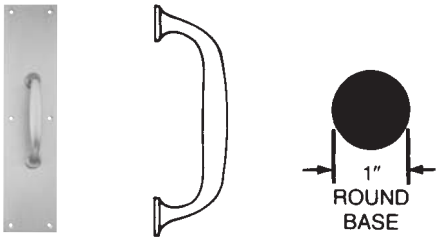

8311 Pull Plate

- 8300 Plate
  3-1/2" x 15"
  4" x 16"
  6" x 16"
- 8111-5 Pull
  5-1/4" centers

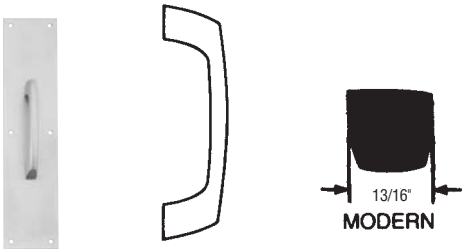

8314 Pull Plate

- 8300 Plate
  3-1/2" x 15"
  4" x 16"
  6" x 16"
- 8114-5 Pull
  5-1/4" centers

How to Order

83 ____ - 5 - ____ - ____ - ____ - ____

Pull Style:
- **11** for 8111
- **14** for 8114

Finishes:
US3, US4, US5, US10, US10B, US15, US15A, US26, US26D, US28, US32D

Size:
3-1/2" x 15", 4" x 16", 6" x 16"

Special Options: (Handing needed for 6" x 16", LH or RH)
- **CFC** Cylinder cutout
- **CTC** Thumbturn cutout

Mounting:
- **Blank** Standard
- **F** Concealed pull wood doors w/push plate (special)
- **G** Concealed pull plate

Mounting

- All mounting hardware is for standard 1-3/4" door.
- Consult Customer Service if other than standard.

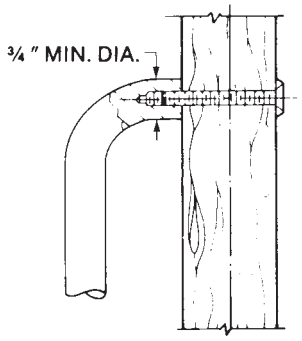

Standard Mounting

- (2) 1/4-20 x 2-1/4" brass, oval head machine screws; plated to match.
- (2) No. 14 countersunk washers; plated to match

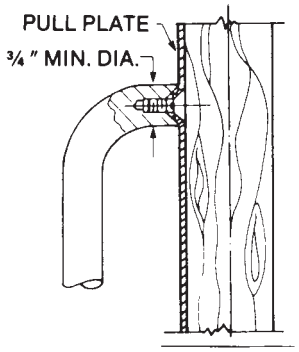

Type G

Concealed Pull Plate Mounting

Available only for 8302, 8303, 8311 and 8314 Pull Plates.

- (2) 1/4-20 x 5/8" steel flat head machine screws; zinc plated.

Pull mounts directly onto plate. Plate is attached to door by 6 screws.

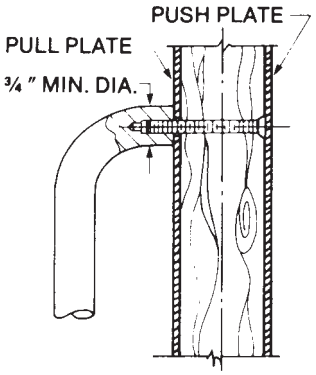

Type F-Special

Wood Doors
Concealed Pull Mounting With Push Plate

- (2) 1/4-20 x 2-1/4" steel flat head machine screws; zinc plated.

Available only for 8102, 8103, 8105, 8111, 8113, 8114, 8302, 8303, 8305, 8311, 8313 and 8314. Plate on opposite side of door must be ordered separately.

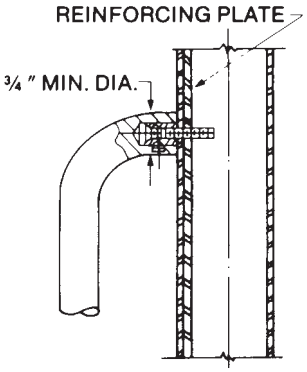

Type H-Special

Reinforced Hollow Metal Door
Concealed Pull Mounting

Available only for 8102 and 8103 Pulls.

- (2) Steel screw sleeves; zinc plated.
- (2) 1/4-20 x 1-1/4" steel countersunk trim head machine screw; zinc plated.

Mounting

- All mounting hardware is for standard 1-3/4" door.
- Consult Customer Service if other than standard.

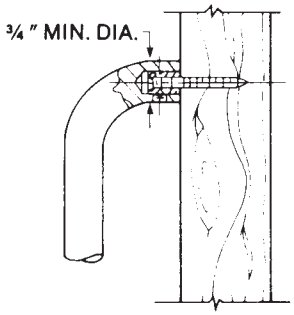

Type I
Wood Doors
Concealed Pull Mounting

Available only for 8102 and 8103 Pulls.

- (2) 10 x 1-1/2" No. 10 steel countersunk trim head sheet metal screws; zinc plated.

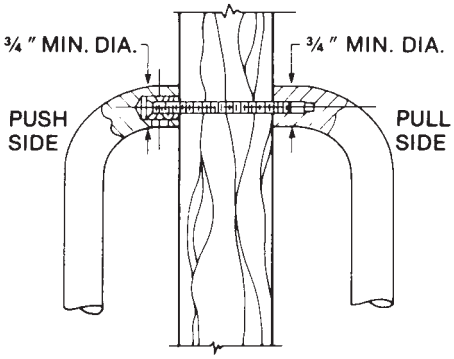

Type J
Back to Back Pull Mounting

Available only for 8102, 8103, 8302 and 8303 Pulls.

- (2) Steel screw sleeves; zinc plated.
- (2) 1/4-20 x 2-3/4" No. 10 steel countersunk trim head machine screws; zinc plated.

Pulls furnished in pairs (PR) unless single (SGL) specified.

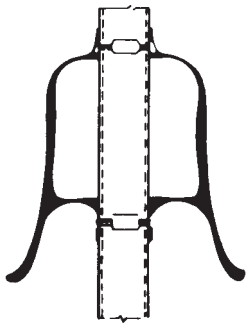

Type K
Back to Back Pull Mounting

Available only for 8121-5 Pulls.

- (4) Steel screw sleeve nuts; steel zinc plated.
- (8) No. 8-32 x 1" brass oval head machine screws; plated to match.

Pulls furnished in pairs (PR).

Surface Concealed "Two-Anchor"

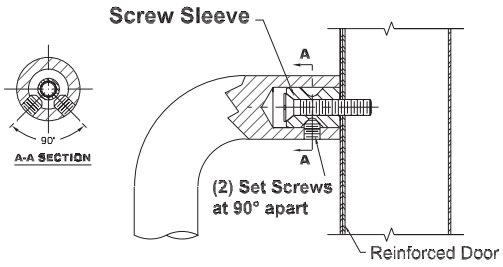

Type L
Reinforced Hollow Metal Door

Available only for 8103EZ and 8190 Pulls.

- (2) 1/4-20 x 1-1/4" steel countersunk trim head machine screws with (4) set screws for maximum anchoring force
- (2) Steel screw sleeves; zinc plated.

Architectural Door Trim

Mounting

- All mounting hardware is for standard 1-3/4" door.
- Consult Customer Service if other than standard.

Back-to-Back with Spanner Collar

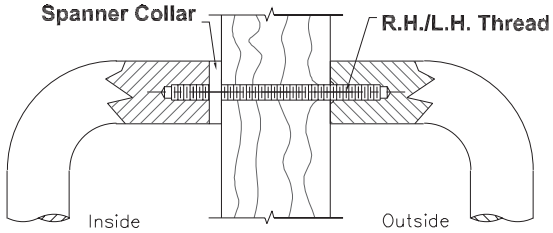

Type M

Wood or Metal Door

Available only for 8103EZ and 8190 Pulls.
- (2) 3/8-16 x 2-7/8" RH/LH bolts with finish matching spanner collars for tight, durable back-to-back mounting.

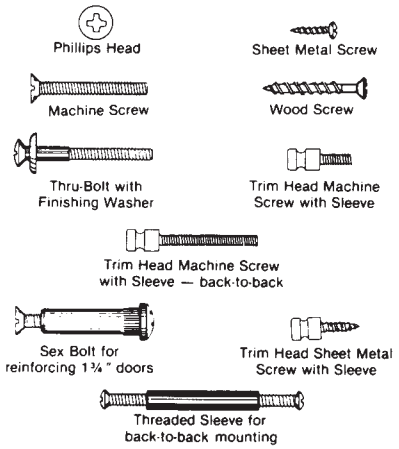

Fastener Guide

- Through bolt fasteners are for standard 1-3/4" thick doors.
- For fasteners other than shown contact our Customer Service Department for availability.

Back-to-Back "Two-Anchor"

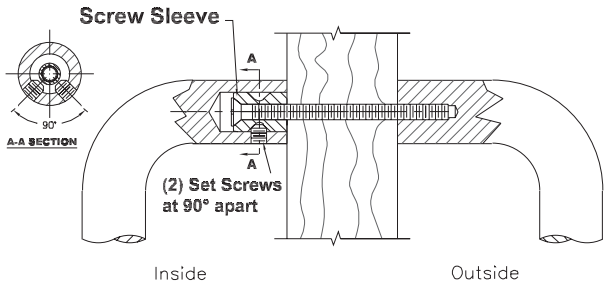

Type N

Wood or Metal Door

Available only for 8103EZ, 8190 and 9100 series Push/Pull Combinations.
- (2) 1/4-20 x 2-3/4" steel countersunk trim head machine screws with (4) set screws for maximum anchoring force.
- (2) Steel screw sleeves; zinc plated.

Decorative Blind Thru - Bolt

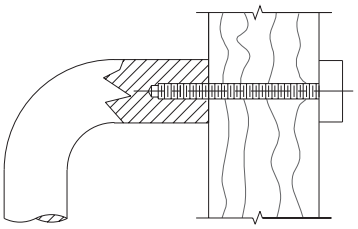

Type O

Wood or Metal Door

Available only for 8103EZ, 8190 and 9100 series Push/Pull Combinations.
- (2) 1/4-20 x 2-1/4" blind thru - bolts; plated to match.

Type NS-Standard Push/Pull Mounting

Type N & Standard

Pushbar to Pull

- (1) 1/4-20 X 3"steel countersunk trim head machine screws with (2) set screws.
- (1) steel screw sleeve, zinc plated.

Free End Pushbar & Pull

- (2) 1/4-20 X 2-1/4" brass, oval head mach screws; plated to match.
- (2) No. 14 countersunk washers; plated to match.

Type NO Push/Pull Mounting

Type N & Type O

Pushbar to Pull

- (1) 1/4-20 X 3"steel countersunk trim head machine screws with (2) set screws.
- (1) steel screw sleeve, zinc plated.

Free End Pushbar & Pull

- (2) 1/4-20 X 2-1/4" blind thru-bolts; plated to match.

Series 8400 Door Protection Plates

.050" Thickness

Features:

- Door Protection Plates are fabricated from the finest architectural aluminum, brass, and stainless steel, or 1/8" thick clear acrylic plastic or black or brown high impact polyethylene.
- All aluminum, brass, bronze and stainless steel Door Protection Plates meet ANSI A156.6 requirements for .050" thickness.
- Optional Beveling—For beveling of top and two sides of plates suffix with B3E, and for beveling of four sides suffix with B4E.

  Plastic plates are beveled on all four sides as standard.
- Each plate is packaged carefully wrapped in strong kraft paper with #6 x 5/8" oval head, undercut sheet metal screws plated to match, for easy installation on hollow metal, laminate, or wood doors. All plates are packaged in heavy duty corrugated cardboard; larger plates are enclosed in a wooden frame.

- Use No. 8401 Kickplate Gasket Tape as a buffer between brass kickplates and metal doors to help prevent tarnishing which may result from electrolytic oxidation. One package provides enough double-sided adhesive-backed foam tape for the perimeter of an 8" x 34" plate.
- Finishes:
  Brass: B3, B4, B5, B10, B10B (for heights over 24", check with customer serivce)

  Stainless Steel: S32D, S32

  Aluminum: PA28

  Plastic: BLK, BRN, CLR

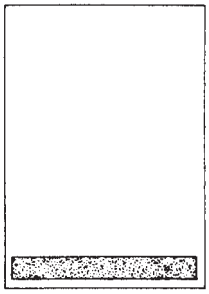

Mop Plates

- Protect the bottom of the pull side of door subject to cleaning and mopping procedures.
- Size Ranges:
  4" to 6" high, 22" to 48" wide

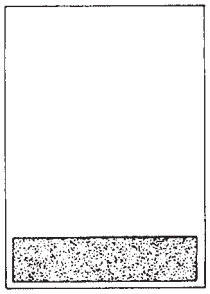

Kick Plates

- Protect the bottom of the push side of doors subject to scuffing from foot traffic.
- Recommended for all doors subject to normal use (especially doors using a closer).
- Size Ranges:
  8" to 24" high, 22" to 48" wide

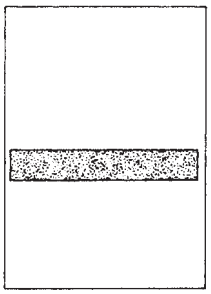

Stretcher Plates

- Protect doors at specific areas where consistent contact is made by stretchers, service carts or other equipment.
- Usually applied to push side of doors.
- Specify "B4E" Option for beveled edges.
- Size Ranges:
  6" to 8" high, 22" to 48" wide

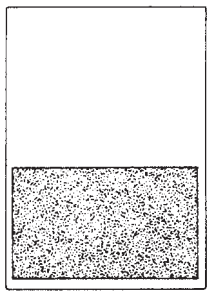

Armor Plates

- Protect lower half of doors from abuse by hard carts, trucks and rough usage.
- Usually applied to push side of single doors and both sides of double acting doors.
- Size Ranges:
  26" to 48" high, 22" to 48" wide

How to Order

8400 ____ - _____ X _____ - _____

Finish

Height:
4" up to 48" in 1/2" increments
(For brass kick plates over 24", check with customer service.)

Width:
22" up to 48" in 1/2" increments

Options: (Only for metal plates)
B3E for Bevel Top and 2 Edges
B4E for Bevel 4 Edges
CS for Counter Sink Holes
ES for Extra row of Screws

Series 8400 Residential Grade (RG) and Light Grade (LG) Door Protection Plates

.037" Thickness

Features:

- All RG and LG plates are .037" thick.
- Each plate is packaged in strong kraft paper or is carded.
- Selected sizes and finishes available in magnetic form for easy installation on hollow metal doors.
- Each non-magnetic plate is packed with #6 x 5/8" oval head, undercut sheet metal screws plated to match, for installation on hollow metal, laminate or wood doors.

Standard Plates (for additional sizes, check with Customer Service)

Model	Finish	Size: 6 x 30	6 x 34	8 x 30	8 x 34
8400 RG	B-505 Ultima Lifetime Finish	✓	✓	✓	✓
	B3/B-605	✓	✓	✓	✓
	B5	✓	✓		✓
	B-613	✓	✓		✓
	B-619	✓	✓	✓	✓
	B-620	✓	✓	✓	✓
	B-625	✓	✓		✓
	PA3	✓	✓	✓	✓
	PA28	✓	✓	✓	✓
8400 LG	S32D	✓	✓	✓	✓
8400 MAG	B-505				✓
	B3/B-605	✓	✓		✓
	PA3				✓

Vandal Resistant Trim

VR900 Series

Features:

- Stainless Steel construction, 11 gage (0.120" thick).
- Thru-bolts and rugged mounting screws for maximum fastening strength.
- 1/4-20 screws and stainless steel finishing washers supplied with VR900 models; 10-24 screws supplied with VR910 models.
- Built-in lock protector prevents vandalism to mortise latchbolt (available on certain models).
- Extra-tough stainless steel cylinder collar prevents pipe wrench or similar tool from damaging cylinder. Tapered design prevents side impacts from transferring directly to cylinder. Collar spins freely.
- Sleek, attractive design.
- Furnished with mounting screws for door thicknesses of 1-3/4" to 2-1/4".
- Finish: US32D.
- Grip coated in black plastisol for softer touch and resilience to temperature extremes. Grip designed for comfortable operation.
- Meets ANSI/BHMA 156.13, Trim Security Test and California State Accessibility Standards Title 24.

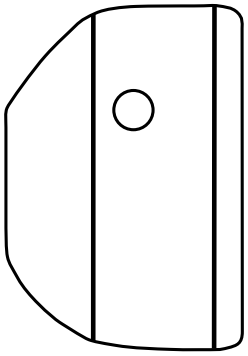

VR900-RHR
VR900-LHR

- For use with most mortise locks on outswinging doors, including Schlage L9000 Series locks with interior L escutcheon, N escutcheon, and rose trims.
- Includes built-in lock protector and cylinder cutout.
- Handed design allows trim to be positioned to coordinate with the centerline of inside hardware.

Prod. No.	Width	Height	Thru-Bolt Pattern	Clearance Grip to Door	Proj.
VR900	7-1/4"	11"	2" W X 10" H	1-1/2"	1-7/8"

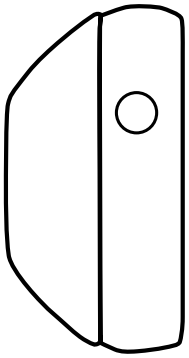

VR900LLP-RH
VR900LLP-LH

- For use with most mortise locks on inswinging doors, including Schlage L9000 Series locks with interior L escutcheon, N escutcheon, and rose trims.
- Includes cutout for cylinder, less lock protector (LLP).
- Handed design allows trim to be positioned to coordinate with the centerline of inside hardware.

Prod. No.	Width	Height	Thru-Bolt Pattern	Clearance Grip to Door	Proj.
VR900LLP	5-1/4"	11"	1-3/4" W X 10" H	1-1/2"	1-7/8"

Vandal Resistant Trim

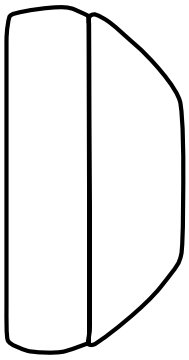

VR910-DT

- For use with Von Duprin 98/99 Series Rim and Vertical exit devices.
- Thru-bolts directly to device.
- Pull operation only. No cylinder cutout.

Prod. No.	Width	Height	Thru-Bolt Pattern	Clearance Grip to Door	Proj.
VR910DT	5-1/4"	11"	1-3/8" W X 7" H	1-1/2"	1-7/8"

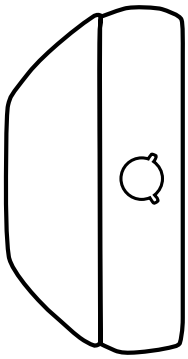

VR910-NL

- For use with Von Duprin 98/99 Series Rim and Vertical exit devices.
- Thru-bolts directly to device.
- Includes cylinder cutout.
- Tailpiece guide and cylinder cup provided.

Prod. No.	Width	Height	Thru-Bolt Pattern	Clearance Grip to Door	Proj.
VR910NL	5-1/4"	11"	1-3/8" W X 7" H	1-1/2"	1-7/8"

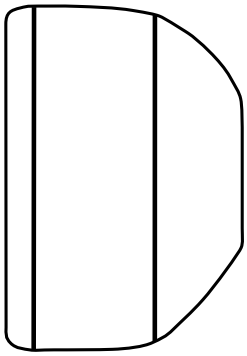

VR910M-DT

- For use with Von Duprin 98/9975 Series Mortise exit devices.
- Thru-bolts directly to device.
- Includes built-in lock protector.
- Pull operation only. No cylinder cutout.

Prod. No.	Width	Height	Thru-Bolt Pattern	Clearance Grip to Door	Proj.
VR910M-DT	7-1/4"	11"	1-3/8" W X 7" H	1-1/2"	1-7/8"

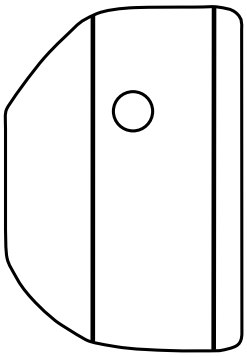

VR910M-NL RHR
VR910M-NL LHR

- For use with Von Duprin 98/9975 Series Mortise exit devices.
- Thru-bolts directly to device.
- Includes built-in lock protector and cylinder cutout.

Prod. No.	Width	Height	Thru-Bolt Pattern	Clearance Grip to Door	Proj.
VR910M-NL	7-1/4"	11"	1-3/8" W X 7" H	1-1/2"	1-7/8"

Notes