7200 Series Pivots

General Information:

- Complete line of 3/4" offset, 1-1/2" offset, center hung, intermediate and power transfer pivots with all exposed parts made of brass or stainless steel for maximum corrosion resistance.
- High strength brass and stainless steel forgings, and castings for rated and non-rated doors combined with precision bearings for smooth operation.
- Stainless steel machine screws and wood screws standard.
- Positive locking vertical adjustment mechanism allows the installer to precisely position the door and balance the load.
- Last digit in pivot set number reflects the maximum door weight in hundreds of pound, e.g., 7215 = 500 pounds. For sets designated as “heavy duty”, add 1,000 pounds, e.g., 7237F HD set = 1700 pounds.
- Pivots for lead lined doors are available, consult factory.
- See page B4 for Pivot Selection Chart.

Finishes:

Description	Finish	BHMA
Powder-Coated Finishes (Available on all models)		
Aluminum	SP28	689
Black	SPBLK	622
Dark Bronze	SP313	695
Brass	SP4	706
Bronze	SP10	691
Plated Finishes (Available on all models except “F—Fire-Rated” models)		
Polished Brass	US3	605
Satin Brass	US4	606
Satin Bronze	US10	612
Oil-Rubbed Bronze	US10B	613
Polished Chromium Plated	US26	625
Satin Chromium Plated	US26D	626
Plated Finishes (Available on “F—Fire-Rated” models)		
Polished Brass on Stainless Steel	US3	632
Plated Satin Bronze on Stainless Steel	US10	639
Polished Stainless Steel	US32	629
Satin Stainless Steel	US32D	630

Optional Finishes:

Consult factory for availability.
Special powder-coated finishes are available.

7200 Series Pivots - Overview

3/4" Offset Pivots - 200 Lb. Doors

7212-7215-7222-7226-7227 Top Pivot

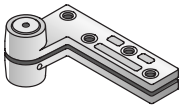

7212 PIVOT SET

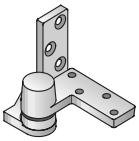

7212
Bottom Pivot

7222 PIVOT SET

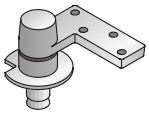

7222
Bottom Pivot

7212V Top Pivot

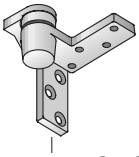

7212V PIVOT SET

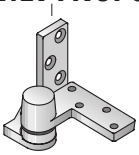

7212
Bottom Pivot

Optional

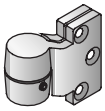

7212-7212V-7222
Intermediate Pivot

3/4" Offset Pivots - Standard and Fire-Rated - 500 to 700 Lb. Doors

7212-7215-7222-7226-7227 Top Pivot
7215F-7226F-7227F Top Pivot

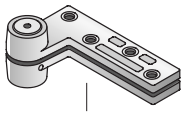

7215 OR 7215F PIVOT SET

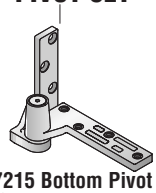

7215 Bottom Pivot
7215F Bottom Pivot

7226 OR 7226F PIVOT SET

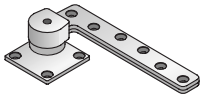

7226-Bottom Pivot
7226F-Bottom Pivot

7227 OR 7227F PIVOT SET

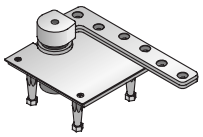

7227-7227F-Bottom Pivot

Optional

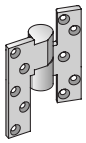

7215-7226-7227
Intermediate Pivot
7215F-7226F-7227F
Intermediate Pivot

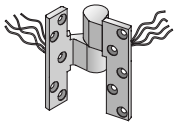

7215-7226-7227PT
Power Transfer
Intermediate Pivot

3/4" Offset Pivots - Fire-Rated - 1000 to 1750 Lb. Doors

7230F-7237F Top Pivot

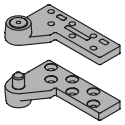

7230F PIVOT SET

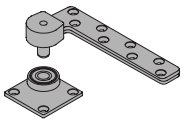

7230F
Bottom Pivot

7237F PIVOT SET

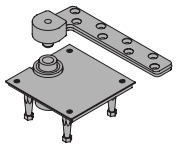

7237F
Bottom Pivot

Optional

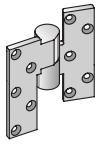

7230F-7237F
Intermediate Pivot

7200 Series Pivots - Overview

1-1/2" Offset Pivots - Fire-Rated - 400 to 500 Lb. Doors

7244F-7245F
Top Pivot

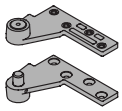

7244F PIVOT SET

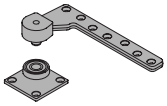

7244F
Bottom Pivot

7245F PIVOT SET

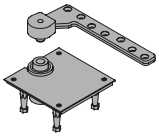

7245F
Bottom Pivot

Optional

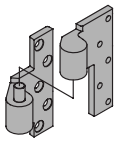

7244F-7245F
Intermediate Pivot

Center Hung Pivots - 300 to 600 Lb. Doors

7253-7255-7255J-7256 Top Pivot

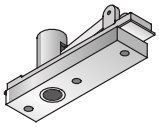

7253 PIVOT SET

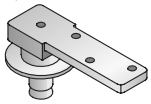

7253
Bottom Pivot

7255 PIVOT SET

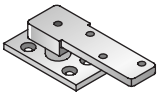

7255
Bottom Pivot

7255J PIVOT SET

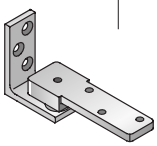

7255J
Bottom Pivot

7256 PIVOT SET

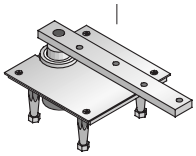

7256
Bottom Pivot

Center Hung Pivots - 1000 Lb. Doors

7259 Top Pivot

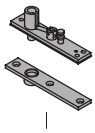

7259 PIVOT SET

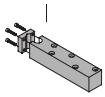

7259
Bottom Pivot

7200 Series Pivot Selection Chart

Pivot Set	UL Rating	Top Pivot	Bottom Pivot	Bottom Pivot Mounting	Recommended Intermediate Pivot	3/4" Offset	1-1/2" Offset	Center Hung	Max Door Weight	Handed
7212	None	7212-7215-7222-7226-7227 TOP	7212 BTM	Jamb Mounted	7212-7212V-7222 INT	Yes			200	Yes
7212V	None	7212V TOP	7212 BTM	Jamb Mounted	7212-7212V-7222 INT	Yes			200	Yes
7215	20 min	7212-7215-7222-7226-7227 TOP	7215 BTM	Jamb Mounted	7215-7226-7227 INT	Yes			500	Yes
7215F	3 hr	7215F-7226F-7227F TOP	7215F BTM	Jamb Mounted	7215F-7226F-7227F INT	Yes			500	Yes
7222	None	7212-7215-7222-7226-7227 TOP	7222 BTM	Floor Mounted	7212-7212V-7222 INT	Yes			200	Yes
7226	20 min	7212-7215-7222-7226-7227 TOP	7226 BTM	Floor Mounted	7215-7226-7227 INT	Yes			600	No
7226F	3 hr	7215F-7226F-7227F TOP	7226F BTM	Floor Mounted	7215F-7226F-7227F INT	Yes			600	No
7227	20 min	7212-7215-7222-7226-7227 TOP	7227 BTM	Mortised Cement Case	7215-7226-7227 INT	Yes			700	No
7227F	3 hr	7215F-7226F-7227F TOP	7227 BTM	Mortised Cement Case	7215F-7226F-7227F INT	Yes			700	No
7230F	3 hr	7230F-7237F TOP	7230F BTM	Floor Mounted	7230F-7237F INT	Yes			1000	No
7237F	3 hr	7230F-7237F TOP	7237F BTM	Mortised Cement Case	7230F-7237F INT	Yes			1750	No
7244F	3 hr	7244F-7245F TOP	7244F BTM	Floor Mounted	7244F-7245F INT		Yes		400	No
7245F	3 hr	7244F-7245F TOP	7245F BTM	Mortised Cement Case	7244F-7245F INT		Yes		500	No
7253	None	7253-7255-7255J-7256 TOP	7253 BTM	Floor Mounted	None			Yes	300	No
7255	None	7253-7255-7255J-7256 TOP	7255 BTM	Floor Mounted	None			Yes	500	No
7255J	None	7253-7255-7255J-7256 TOP	7255J BTM	Jamb Mounted	None			Yes	500	No
7256	None	7253-7255-7255J-7256 TOP	7256 BTM	Mortised Cement Case	None			Yes	600	No
7259	None	7259 TOP	7259 BTM	Mortised Cement Case	None			Yes	1000	No

7212 & 7212V 3/4" Offset

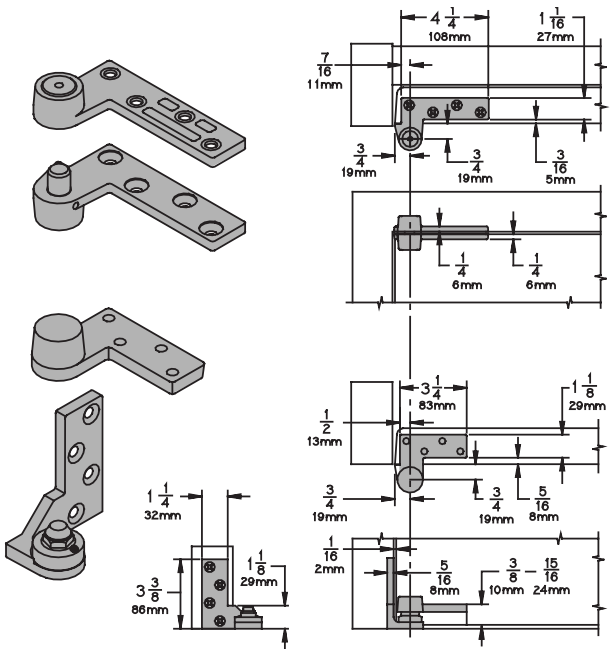

7212 Pivot Set

- Handed 3/4" offset pivot set consisting of a jamb mounted 7212 Bottom Pivot (handed), and a head frame mounted 7212 Top Pivot (non-handed).
- Door Thickness minimum 1-3/4" (44mm), bevel 1/8" (3mm) in 2" (51mm).
- Center Line Offset 3/4" (19mm) from face of door and 3/4" from edge of door.
- Maximum Load 200 pounds (91 kg).
- Vertical Adjustment Range of 3/16" (5mm), which includes a positive locking feature.
- Optional 7212 Intermediate Pivot (handed) carries up to an additional 100 pounds (45.5 kg) load or needed for doors over 7'. See page B14.

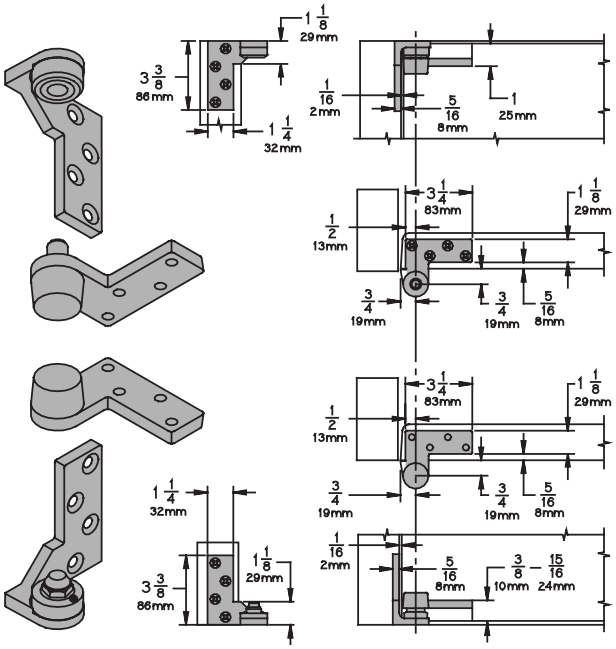

7212V Pivot Set

- Handed 3/4" offset pivot set consisting of a jamb mounted 7212 Bottom Pivot (handed), and a jamb mounted 7212V Top Pivot (handed).
- Door Thickness minimum 1-3/4" (44mm), bevel 1/8" (3mm) in 2" (51mm).
- Center Line Offset 3/4" (19mm) from face of door and 3/4" from edge of door.
- Maximum Load 200 pounds (91 kg).
- Vertical Adjustment Range of 3/16" (5mm), which includes a positive locking feature.
- Optional 7212 intermediate Pivot (handed) carries up to an additional 100 pounds (45.5 kg) load or needed for doors over 7'. See page B14.

How to Order: 7212 ___ - ___ - ___ - _____

Mounting Type:
- **Blank** Head frame mounted to pivot
- **V** Jamb mounted top pivot

Pivot Style:
- **Blank** Top and bottom set
- **TOP** Top pivot only
- **BTM** Bottom pivot only
- **INT** Intermediate pivot

Handing:
- **LH** Left-hand door
- **RH** Right-hand door

Finishes:
US3, US4, US10, US10B, US26, US26D, SP4, SP10, SP28, SP313, SPBLK

7215 & 7215F 3/4" Offset

7215 or **7215F** Pivot Sets

- Handed 3/4" offset pivot set consisting of a jamb mounted 7215 or 7215F Bottom Pivot (handed) and a head frame mounted 7215 or 7215F Top Pivot, (non-handed).
- Door Thickness minimum 1-3/4" (44mm), bevel 1/8" (3mm) in 2" (51mm).
- Center Line Offset 3/4" (19mm) from face of door and 3/4" from edge of door.
- Maximum Load 500 pounds (227 kg).
- UL Listed
  7215 for 20 minute rated door.
  7215F for 3 hour rated door.
- 7215F meets ANSI/BHMA Grade 1.
- Vertical Adjustment Range of 3/16" (5mm), which includes a positive locking feature.
- Optional Intermediate Pivot
  For 7215 set use 7215 Intermediate Pivot (handed).
  For 7215F set use 7215 Intermediate Pivot (handed).
  Each Intermediate Pivot carries up to an additional 100 pounds (45.5 kg) load or needed for doors over 7'. See page B14.
- Optional 7215 PT Power Transfer Intermediate Pivot (handed). Provides 4 wire transfer with no weight bearing capabilities. See page B20.

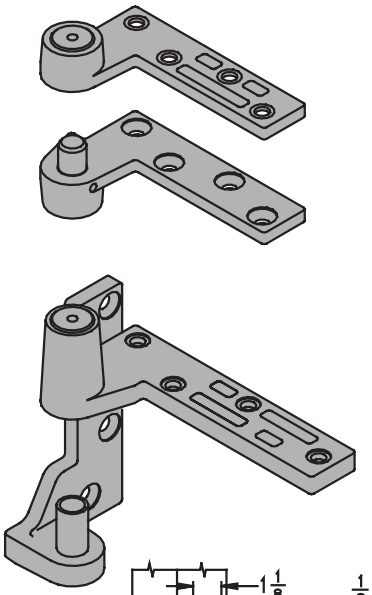

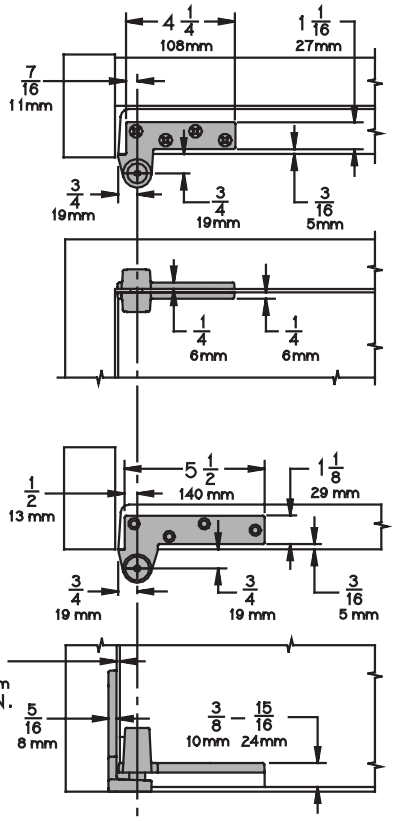

How to Order:

7215 ___ - ___ - ___ - ____

Rating:

Blank	Non-fire-rated
F	Fire-rated

Pivot Style:

Blank	Top and bottom set
TOP	Top pivot only
BTM	Bottom pivot only
INT	Intermediate pivot only
PT INT	Power transfer intermediate pivot only

Handing:

LH	Left-hand door
RH	Right-hand door

Finishes:

Non-Fire-Rated	US3, US4, US10, US10B, US26, US26D, SP4, SP10, SP28, SP313, SPBLK
Fire-Rated	US3, US10, US32, US32D, SP4, SP10, SP28, SP313, SPBLK

7222 3/4" Offset

7222 Pivot Set

- Handed 3/4" offset pivot set consisting of a base plate mounted 7222 Bottom Pivot (handed), and a head frame mounted 7222 Top Pivot (non-handed).
- Door Thickness minimum 1-3/4" (44mm), bevel 1/8" (3mm) in 2" (51mm).
- Center Line Offset 3/4" (19mm) from face of door and 3/4" from edge of door.
- Maximum Load 200 pounds (91 kg).
- Vertical Adjustment Range of 3/16" (5mm), which includes a positive locking feature.
- Optional 7222 Intermediate Pivot (handed) carries up to an additional 100 pounds (45.5 kg) load or needed for doors over 7'. See page B14.

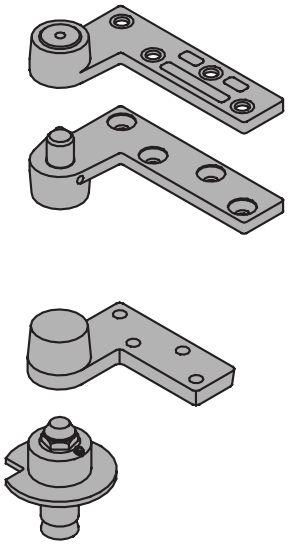

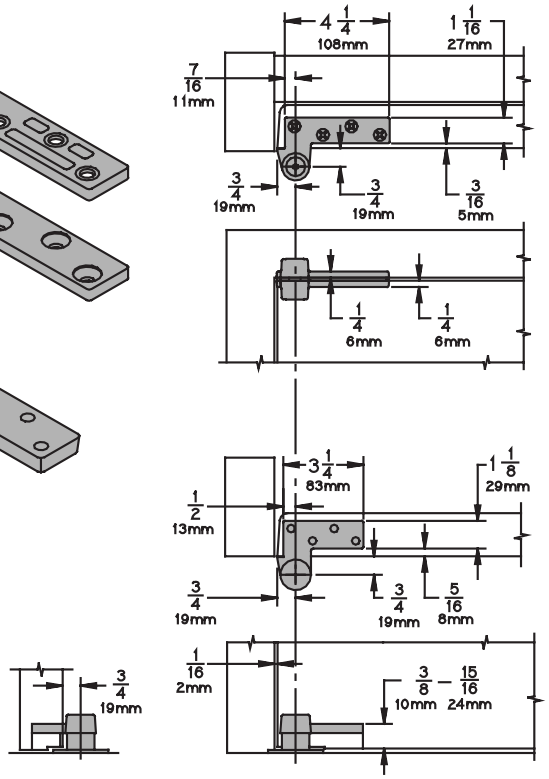

How to Order:

7222 - ___ - ___ - ____

Pivot Style:

Blank	Top and bottom set
TOP	Top pivot only
BTM	Bottom pivot only
INT	Intermediate pivot only

Handing:

LH	Left-hand door
RH	Right-hand door

Finishes:

US3, US4, US10, US10B, US26, US26D, SP4, SP10, SP28, SP313, SPBLK

7226 & 7226F 3/4" Offset

7226 or **7226F** Pivot Sets

- Non-handed 3/4" offset pivot set consisting of a base plate mounted 7226 or 7226F Bottom Pivot, and a head frame mounted 7226 or 7226F Top Pivot.
- Door Thickness minimum 1-3/4" (44mm), bevel 1/8" (3mm) in 2" (51mm).
- Center Line Offset 3/4" (19mm) from face of door and 3/4" from edge of door.
- Maximum Load 600 pounds (272 kg).
- UL Listed
  7226 for 20 minute rated door.
  7226F for 3 hour rated door.
- 7226F meets ANSI/BHMA Grade 1.
- Vertical Adjustment Range of 3/16" (5mm), which includes a positive locking feature.
- Optional Intermediate Pivot
  For 7226 set, use 7226 Intermediate Pivot (handed). For 7226F set, use 7226F Intermediate Pivot (handed). Each Intermediate Pivot carries up to an additional 100 pounds (45.5 kg) load or needed for doors over 7'. See page B14.
- Optional 7226 PT Power Transfer Intermediate Pivot (handed). Provides 4 wire transfer with no weight bearing capabilities. See page B20.

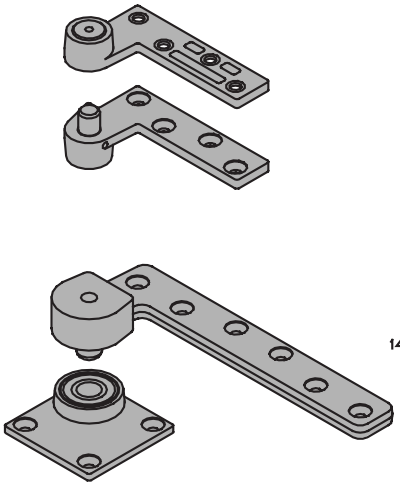

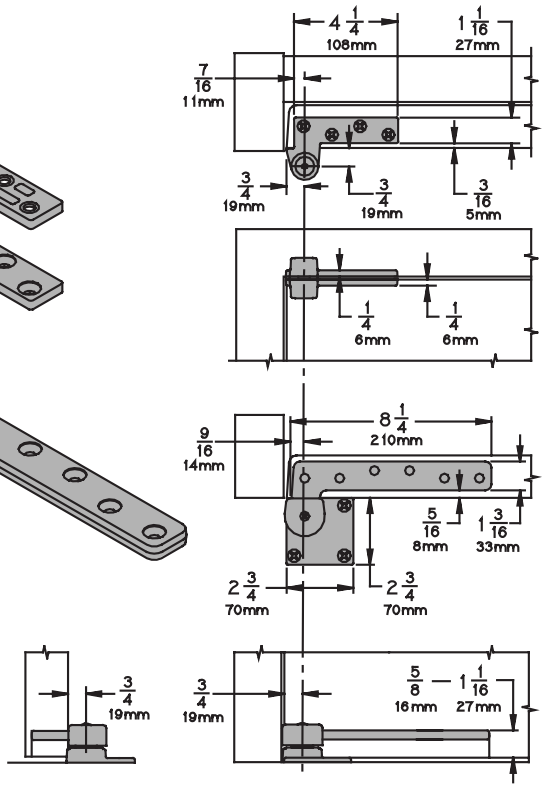

How to Order:

7226 ___ - ___ - ___ - ___

Rating:

Blank	Non-fire-rated
F	Fire-rated

Pivot Style:

Blank	Top and bottom set
TOP	Top pivot only
BTM	Bottom pivot only
INT	Intermediate pivot only
PT INT	Power transfer intermediate pivot only

Handing:

LH	Left-hand door
RH	Right-hand door

Finishes:

Non-Fire-Rated	US3, US4, US10, US10B, US26, US26D, SP4, SP10, SP28, SP313, SPBLK
Fire-Rated	US3, US10, US32, US32D, SP4, SP10, SP28, SP313, SPBLK

7227 & 7227F 3/4" Offset

7227 or **7227F** Pivot Sets

- Non-handed 3/4" offset pivot set consisting of mortised cement case mounted 7227 or 7227F Bottom Pivot and a head frame mounted 7227 or 7227F Top Pivot.
- Door Thickness minimum 1-3/4" (44mm), bevel 1/8" (3mm) in 2" (51mm).
- Center Line Offset 3/4" (19mm) from face of door and 3/4" from edge of door.
- Maximum Load 700 pounds (318 kg).
- UL Listed
  7227 for 20 minute rated door.
  7227F for 3 hour rated door.
- 7227F meets ANSI/BHMA Grade 1.
- Vertical Adjustment Range of 3/16" (5mm), which includes a positive locking feature.
- Optional Intermediate Pivot
  For 7227 set use 7227 Intermediate Pivot (handed).For 7227F set use 7227F Intermediate Pivot (handed).Each Intermediate Pivot carries up to an additional 100 pounds (45.5 kg) load or needed for doors over 7'. See page B14.
- Optional 7227 PT Power Transfer Intermediate Pivot (handed). Provides 4 wire transfer with no weight bearing capabilities. See page B20.

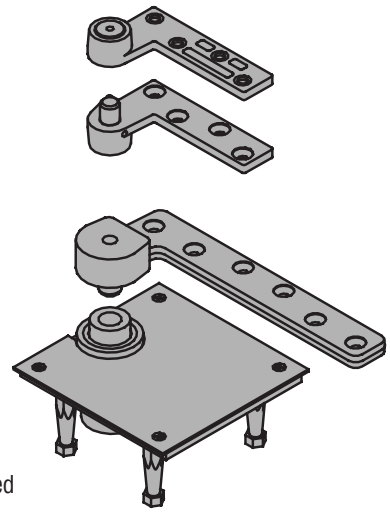

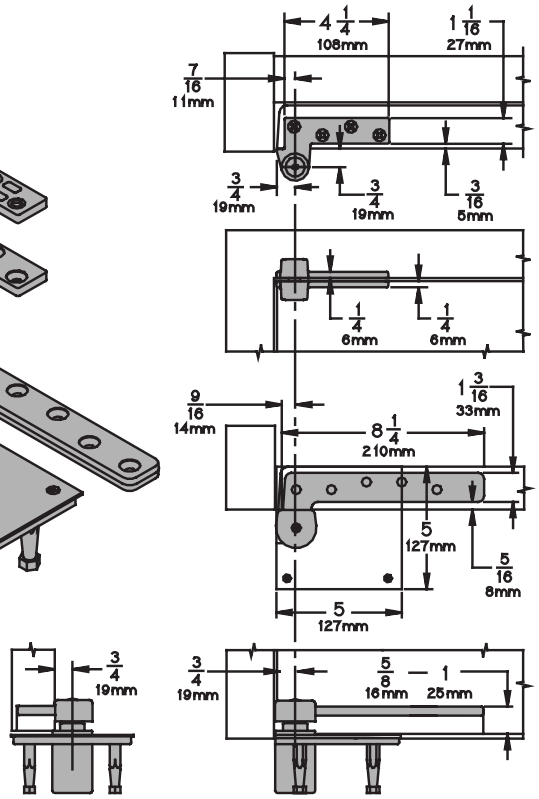

How to Order:

7227___ - ___ - ___ - ____

Rating:

Blank	Non-fire-rated
F	Fire-rated

Pivot Style:

Blank	Top and bottom set
TOP	Top pivot only
BTM	Bottom pivot only
INT	Intermediate pivot only
PT INT	Power transfer intermediate pivot only

Handing:

LH	Left-hand door
RH	Right-hand door

Finishes:

Non-Fire-Rated	US3, US4, US10, US10B, US26, US26D, SP4, SP10, SP28, SP313, SPBLK
Fire-Rated	US3, US10, US32, US32D, SP4, SP10, SP28, SP313, SPBLK

7230F 3/4" Offset, Heavy Duty

7230F Heavy Duty Pivot Set

- Non-handed 3/4" offset pivot set consisting of a base plate mounted 7230F Bottom Pivot and a head frame mounted 7230F Top Pivot.
- Door Thickness minimum 1-3/4" (44mm), bevel 1/8" (3mm) in 2" (51mm).
- Center Line Offset 3/4" (19mm) from face of door and 3/4" from edge of door.
- Maximum Load 1000 pounds (455 kg).
- Can be used on lead-lined doors.
- UL Listed for 3 hour rated door.
- Meets ANSI/BHMA Grade 1.
- Vertical Adjustment Range of 3/16" (5mm), which includes a positive locking feature.
- Optional 7230F Intermediate Pivot (handed) carries up to an additional 100 pounds (45.5 kg) load or needed for doors over 7'. See page B15.

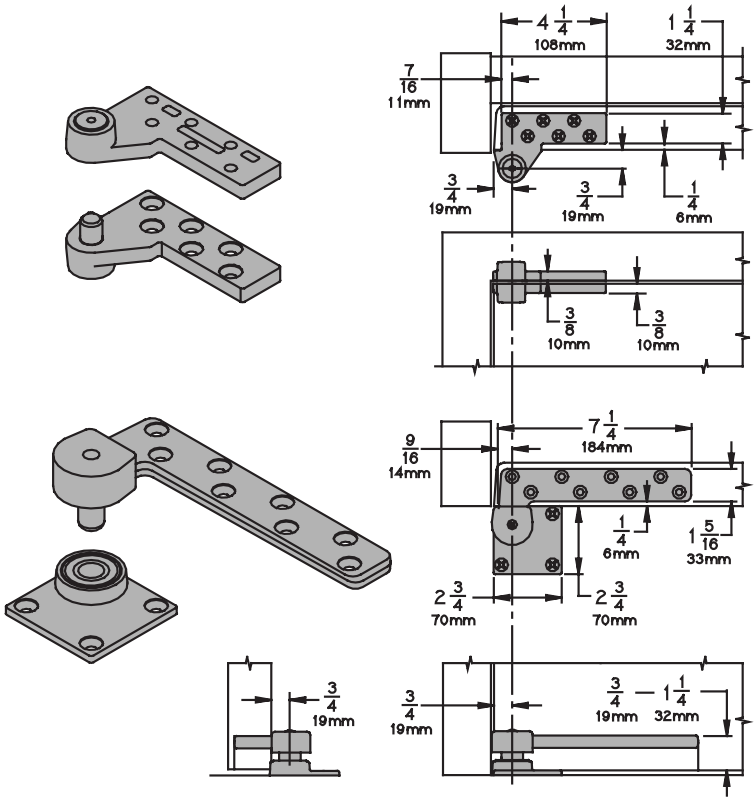

How to Order:

7230F - ____ - ____ - ____

Pivot Style:

Blank	Top and bottom set
TOP	Top pivot only
BTM	Bottom pivot only
INT	Intermediate pivot only

Handing:

LH	Left-hand door
RH	Right-hand door

Finishes:

US3, US10, US32, US32D, SP4, SP10, SP28, SP313, SPBLK

7237F 3/4" Offset, Heavy Duty

7237F Heavy Duty Pivot Set

- Non-handed 3/4" offset pivot set consisting of a mortised cement case mounted 7237F Bottom Pivot and a head frame mounted 7237F Top Pivot.
- Door Thickness minimum 1-3/4" (44mm), bevel 1/8" (3mm) in 2" (51mm).
- Center Line Offset 3/4" (19mm) from face of door and 3/4" from edge of door.
- Maximum Load 1750 pounds (795 kg).
- Can be used on lead-lined doors.
- UL Listed for 3 hour rated door.
- Meets ANSI/BHMA Grade 1.
- Vertical Adjustment Range of 3/16" (5mm), which includes a positive locking feature.
- Optional 7237F Intermediate Pivot (handed) carries up to an additional 100 pounds (45.5 kg) load or needed for doors over 7'. See page B15.

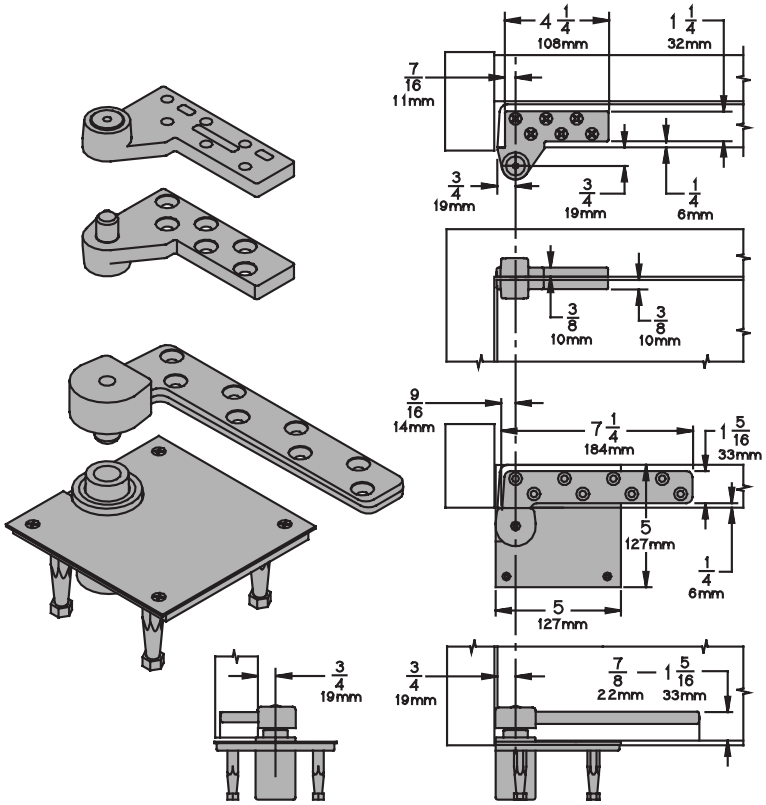

How to Order:

7237F - ___ - ___ - ___

Pivot Style:

Blank	Top and bottom set
TOP	Top pivot only
BTM	Bottom pivot only
INT	Intermediate pivot only

Handing:

LH	Left-hand door
RH	Right-hand door

Finishes:

US3, US10, US32, US32D, SP4, SP10, SP28, SP313, SPBLK

7244F 1-1/2" Offset

7244F Heavy Duty Pivot Set

- Non-handed 1-1/2" offset pivot set consisting of a base plate mounted 7244F Bottom Pivot and a head frame mounted 7244F Top Pivot.
- Door Thickness minimum 1-3/4" (44mm), bevel 1/8" (3mm) in 2" (51mm).
- Center Line Offset 1-1/2" (19mm) from face of door and 3/4" from edge of door.
- Maximum Load 400 pounds (182 kg).
- UL Listed for 3 hour rated door.
- Meets ANSI/BHMA Grade 1.
- Vertical Adjustment Range of 3/16" (5mm), which includes a positive locking feature.
- Optional 7244F Intermediate Pivot (handed) carries up to an additional 100 pounds (45.5 kg) load or needed for doors over 7'. See page B15.

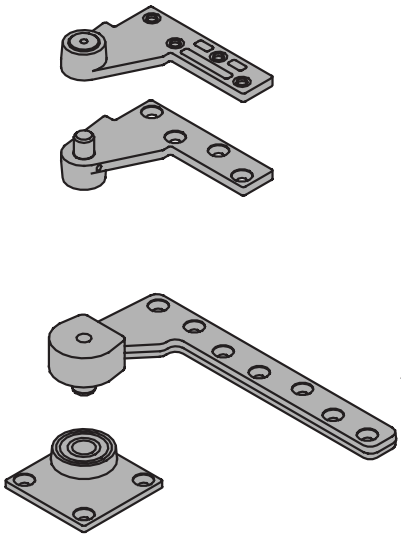

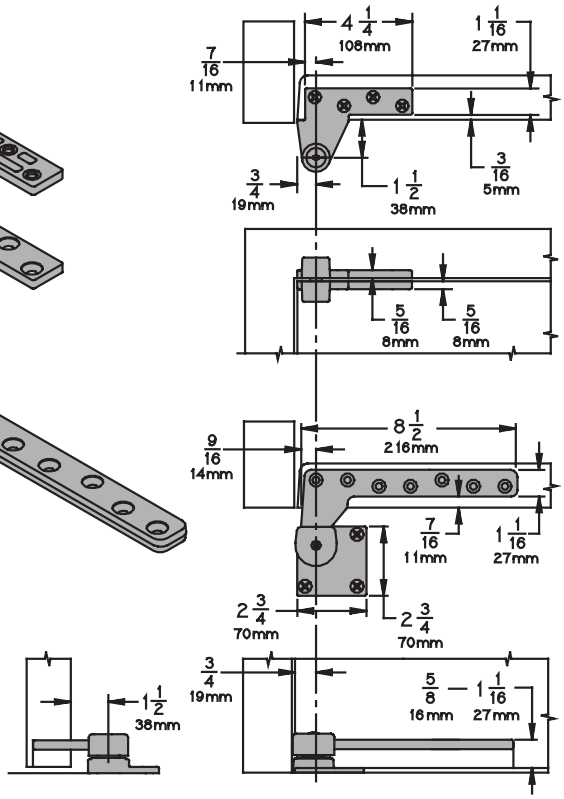

How to Order:

7244F - ____ - ____ - ____

Pivot Style:

Blank	Top and bottom set
TOP	Top pivot only
BTM	Bottom pivot only
INT	Intermediate pivot only

Handing:

LH	Left-hand door
RH	Right-hand door

Finishes:

US3, US10, US32, US32D, SP4, SP10, SP28, SP313, SPBLK

7245F 1-1/2" Offset

7245F Heavy Duty Pivot Set

- Non-handed 1-1/2" offset pivot set consisting of a mortised cement case mounted 7245F Bottom Pivot and a head frame mounted 7245F Top Pivot.
- Door Thickness minimum 1-3/4" (44mm), bevel 1/8" (3mm) in 2" (51mm).
- Center Line Offset 1-1/2" (19mm) from face of door and 3/4" from edge of door.
- Maximum Load 500 pounds (227 kg).
- UL Listed for 3 hour rated door.
- Meets ANSI/BHMA Grade 1.
- Vertical Adjustment Range of 3/16" (5mm), which includes a positive locking feature.
- Optional 7245F Intermediate Pivot (handed) carries up to an additional 100 pounds (45.5 kg) load or needed for doors over 7'. See page B15.

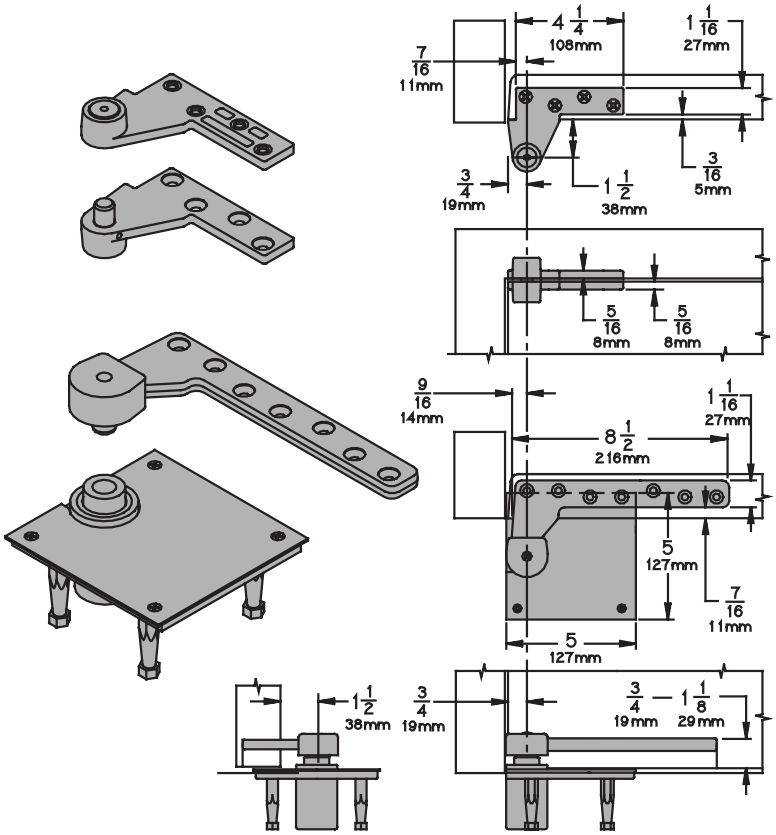

How to Order:

7245F - ____ - ____ - ____

Pivot Style:

Blank	Top and bottom set
TOP	Top pivot only
BTM	Bottom pivot only
INT	Intermediate pivot only

Handing:

LH	Left-hand door
RH	Right-hand door

Finishes:

US3, US10, US32, US32D, SP4, SP10, SP28, SP313, SPBLK

7200 Series Intermediate Pivots

General Information:

- Door Height NFPA 80, Section 3-8.3, requires additional intermediate pivot for some fire-rated doors. We recommend one for every 2'6" (762mm), or fraction thereof, door height over 5'0" (1524mm).
- Door Weight exceeding pivot set limit, add one intermediate pivot for each 100 lbs. (45.5 kg) additional.
- Door Thickness minimum 1-3/4" (44mm), bevel 1/8" (3mm) in 2" (51mm).

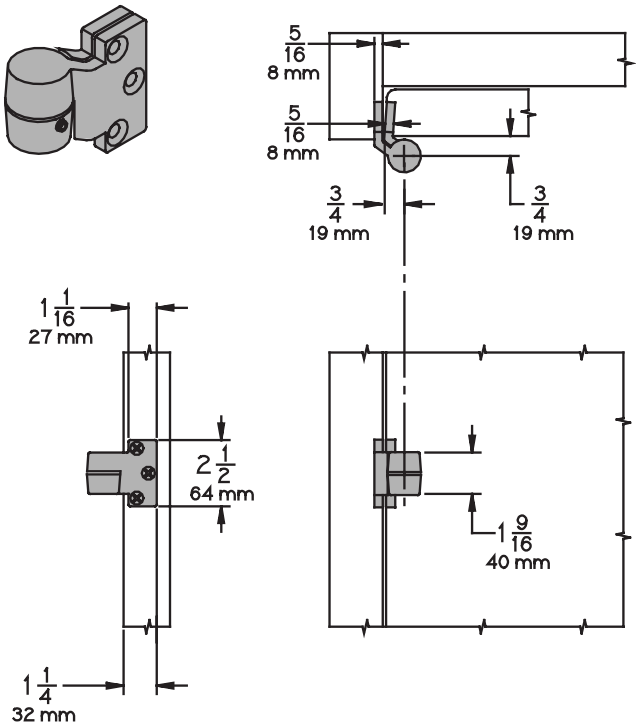

7212-7212V-7222 INT

- Handed 3/4" offset pivots compatible with the following pivot sets: 7212, 7212V and 7222.
- Maximum Load 100 pounds (45.5 kg).
- Vertical Adjustment Range of 3/16" (5mm), which includes a positive locking feature.
- Finishes: US3, US4, US10, US10B, US26, US26D, SP4, SP10, SP28, SP313 and SPBLK.

7215-7226-7227 INT

- Handed 3/4" offset pivots compatible with the following pivot sets: 7215, 7226 and 7227.
- Maximum Load 100 pounds (45.5 kg).
- UL Listed for 20 minute rated door.
- Meets ANSI/BHMA Grade 1.
- Vertical Adjustment Range of 3/16" (5mm), which includes a positive locking feature.
- Finishes: US3, US4, US10, US10B, US26, US26D, SP4, SP10, SP28, SP313 and SPBLK.

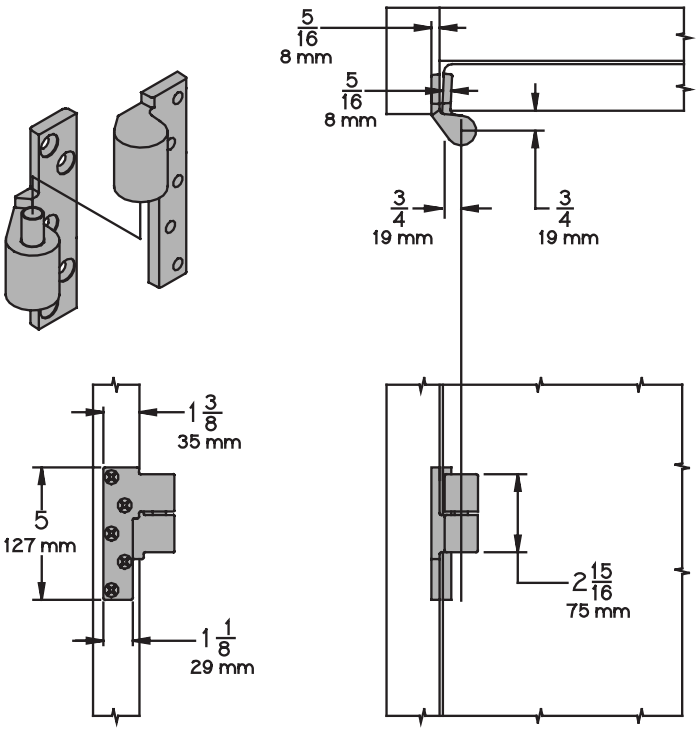

7215F-7226F-7227F INT

- Handed 3/4" offset pivots compatible with the following pivot sets: 7215F, 7226F and 7227F.
- Maximum Load 100 pounds (45.5 kg).
- UL Listed for 3 hour rated door.
- Meets ANSI/BHMA Grade 1.
- Vertical Adjustment Range of 3/16" (5mm), which includes a positive locking feature.
- Finishes: US3, US10, US32, US32D, SP4, SP10, SP28, SP313 and SPBLK.

7200 Series Intermediate Pivots

7230F - 7237F INT

- Handed 3/4" offset pivots compatible with the following pivot sets: 7230F and 7237F.
- Maximum Load 100 pounds (45.5 kg).
- Can be used on lead-lined doors.
- UL Listed for 3 hour rated door.
- Meets ANSI/BHMA Grade 1.
- Vertical Adjustment Range of 3/16" (5mm), which includes a positive locking feature.
- Finishes: US3, US10, US32, US32D, SP4, SP10, SP28, SP313 and SPBLK.

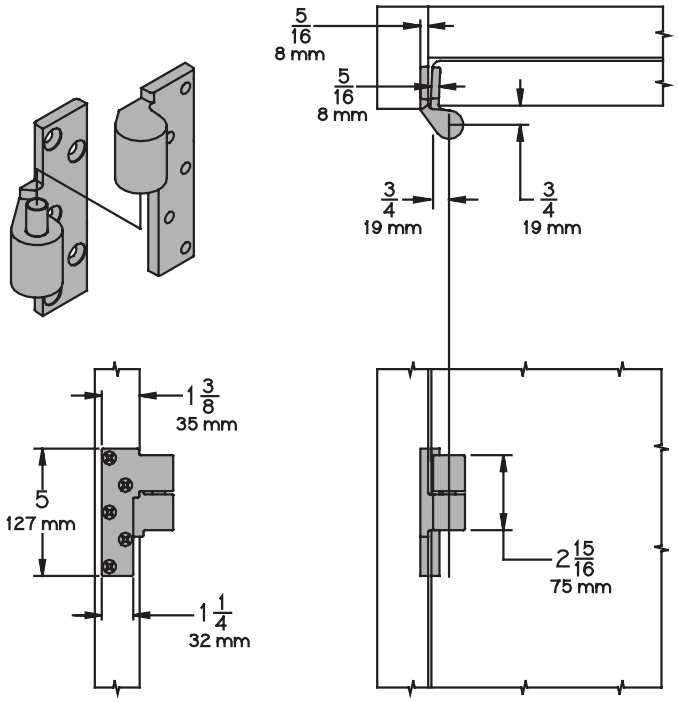

7244F - 7245F INT

- Handed 1-1/2" offset pivots compatible with the following pivot sets: 7244F and 7245F.
- Maximum Load 100 pounds (45.5 kg).
- UL Listed for 3 hour rated door.
- Meets ANSI/BHMA Grade 1.
- Vertical Adjustment Range of 3/16" (5mm), which includes a positive locking feature.
- Finishes: US3, US10, US32, US32D, SP4, SP10, SP28, SP313 and SPBLK.

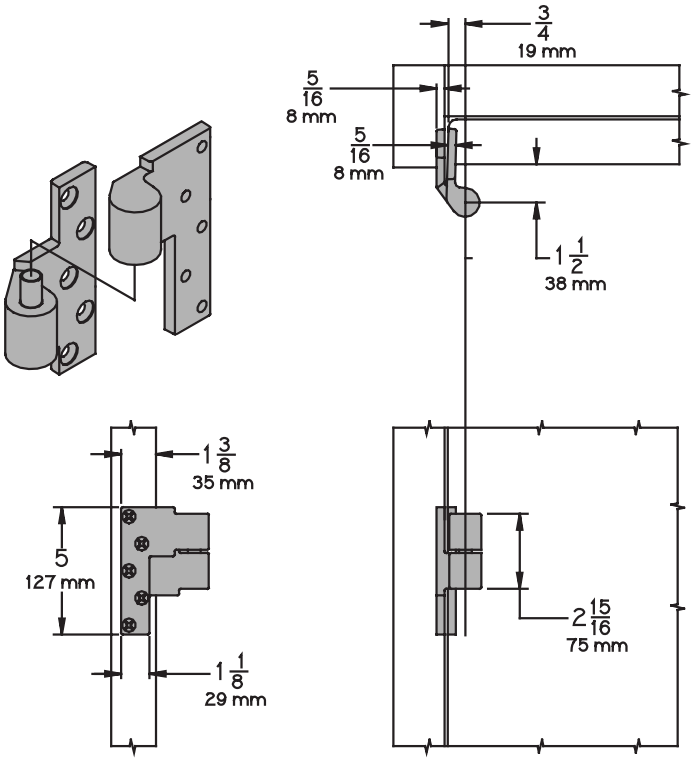

7253 Center Hung Pivot Set

7253 Pivot Set

- Center hung pivot set consisting of base plate mounted 7253 Bottom Pivot and a head frame mounted 7253 Top Pivot.
- Maximum Load 300 pounds (136 kg).
- Easy Installation Tilt on bearing and bearing pin.
- Door Thickness minimum 1-3/4" (44mm).
- Radius Stop (A) to clear heel edge of door.
- Pivot Distance (B) 1-3/4" (44mm) minimum from jamb to centerline of pivot pin. Radius heel edge of door, 1-5/8" (41mm) minimum recommended.
- Clearance from bottom edge of door to the floor mounting surface is adjustable from 3/16" (5mm) to 3/4" (19mm) by varying the depth of the mortise (C) in the bottom rail of the door, refer to Table D. Over 3/4" (19mm) from the door to floor mounting surface, consult factory.
- Vertical Adjustment based on mortise preparation in bottom rail of the door. Refer to Table D.

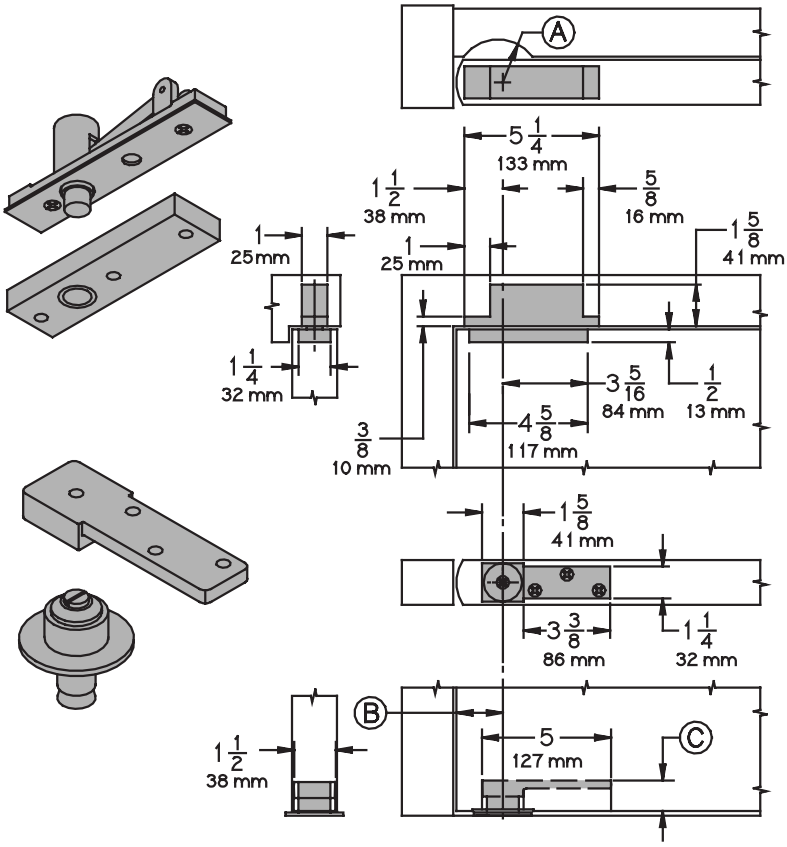

Table D

Clearance	Depth of Mortise
3/16" (5mm)	1-3/16" (30mm)
3/8" (10mm)	1" (25mm)
1/2" (13mm)	7/8" (22mm)
5/8" (16mm)	3/4" (19mm)
3/4" (19mm)	5/8" (16mm)

How to Order:

7253 - ___ - ____

Pivot Style:

Blank	Top and bottom set
TOP	Top pivot only
BTM	Bottom pivot only

Finishes:

US3, US4, US10, US10B, US26, US26D, SP4, SP10, SP28, SP313, SPBLK

7255 & 7255J Center Hung Pivot Sets

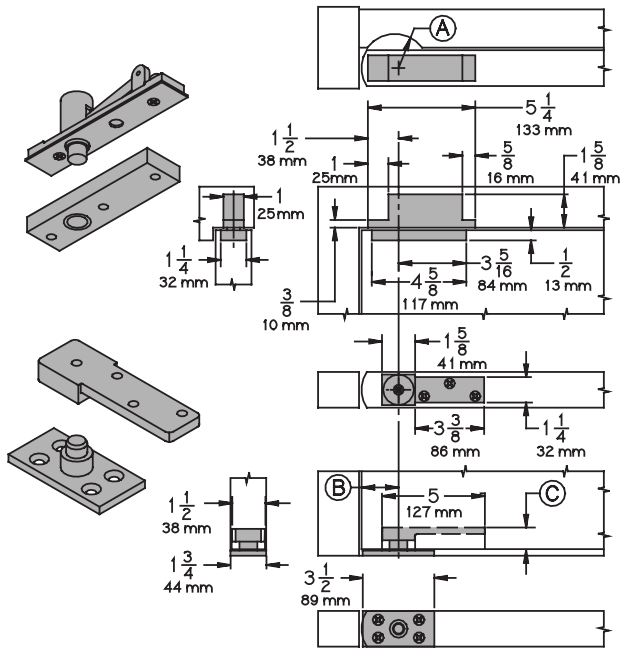

7255 Pivot Set

- Center hung pivot set consisting of base plate mounted 7255 Bottom Pivot and a head frame mounted 7255 Top Pivot.
- Maximum Load 500 pounds (227 kg).
- Door Thickness minimum 1-3/4" (44mm).
- Radius Stop (A) to clear heel edge of door.
- Pivot Distance (B) 1-3/4" (44mm) minimum from jamb to centerline of pivot pin. Radius heel edge of door, 1-5/8" (41mm) minimum recommended.
- Clearance from bottom edge of door to the floor mounting surface is adjustable from 3/16" (5mm) to 3/4" (19mm) by varying the depth of the mortise (C) in the bottom rail of the door, refer to Table D. Over 3/4" (19mm) from the door to floor mounting surface, consult factory.
- Meets ANSI/BHMA Grade 1.
- Vertical Adjustment based on mortise preparation in bottom rail of the door. Refer to Table D, pg. B16.

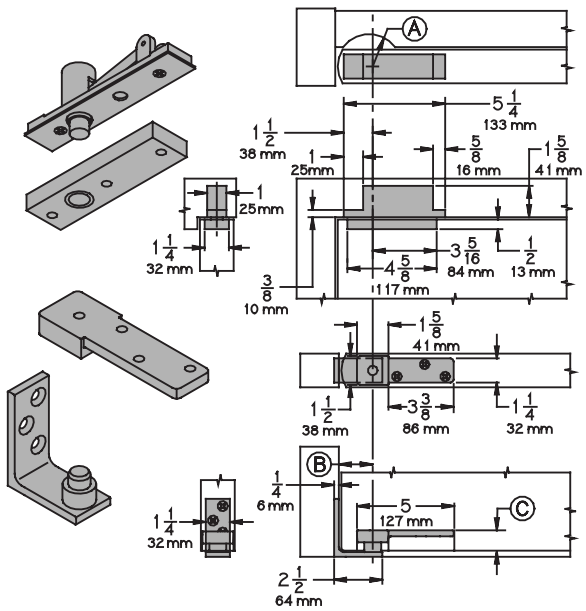

7255J Pivot Set

- Center hung pivot set consisting of jamb mounted 7255J Bottom Pivot and a head frame mounted 7255 Top Pivot.
- Maximum Load 500 pounds (227 kg).
- Door Thickness minimum 1-3/4" (44mm).
- Radius Stop (A) to clear heel edge of door.
- Pivot Distance (B) 1-3/4" (44mm) minimum from jamb to centerline of pivot pin. Radius heel edge of door, 1-5/8" (41mm) minimum recommended.
- Clearance from bottom edge of door to the floor mounting surface is adjustable from 3/16" (5mm) to 3/4" (19mm) by varying the depth of the mortise (C) in the bottom rail of the door, refer to Table D. Over 3/4" (19mm) from the door to floor mounting surface, consult factory.
- Meets ANSI/BHMA Grade 1.
- Vertical Adjustment based on mortise preparation in bottom rail of the door. Refer to Table D, pg. B16.

How to Order:

7255 ___ - ___ - ___

Mounting:

Blank	Floor mounted bottom pivot
J	Jamb mounted bottom pivot

Pivot Style:

Blank	Top and bottom set
TOP	Top pivot only
BTM	Bottom pivot only

Finishes:

US3, US4, US10, US10B, US26, US26D, SP4, SP10, SP28, SP313, SPBLK

7256 Center Hung Pivot Set

7256 Pivot Set

- Center hung pivot set consisting of mortised cement case mounted 7256 Bottom Pivot and a head frame mounted 7256 Top Pivot.
- Door Thickness minimum 1-3/4" (44mm).
- Radius Stop (A) to clear heel edge of door.
- Pivot Distance (B) 1-3/4" (44mm) minimum from jamb to centerline of pivot pin. Radius heel edge of door, 1-5/8" (41mm) minimum recommended.
- Clearance from bottom edge of door to the floor mounting surface is adjustable from 3/16" (5mm) to 3/4" (19mm) by varying the depth of the mortise (C) in the bottom rail of the door, refer to Table D. Over 3/4" (19mm) from the door to floor mounting surface, consult factory.
- Maximum Load 600 pounds (272 kg).
- Meets ANSI/BHMA Grade 1.
- Vertical Adjustment based on mortise preparation in bottom rail of the door. Refer to Table D.

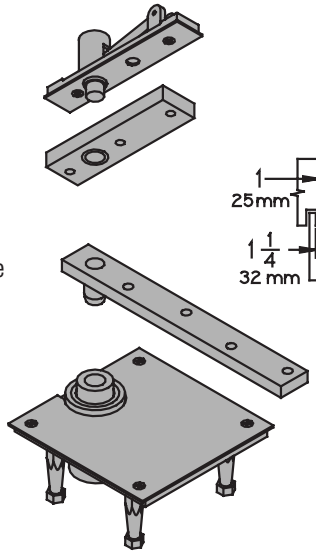

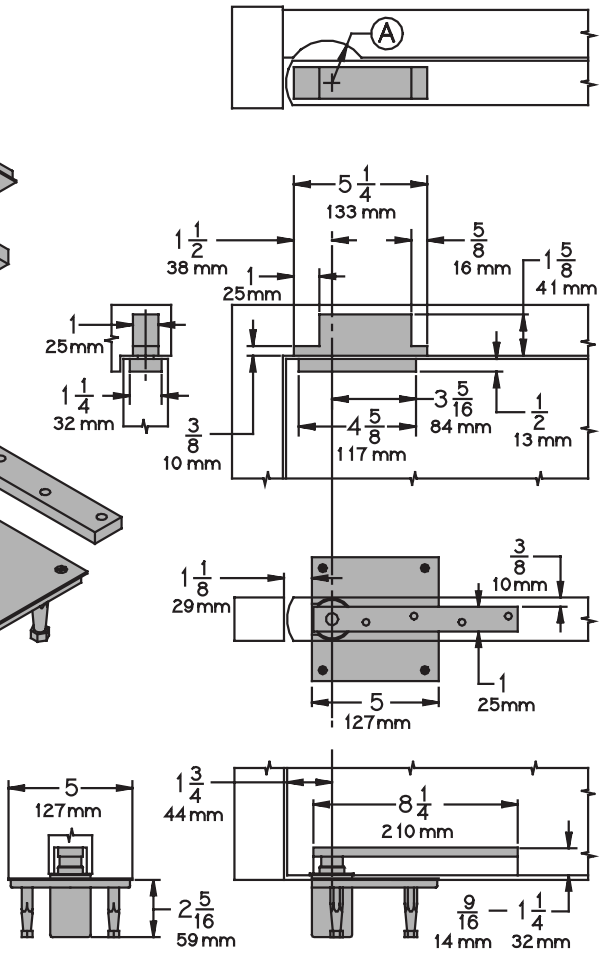

Table D

Clearance	Depth of Mortise
3/16" (5mm)	1-3/16" (30mm)
3/8" (10mm)	1" (25mm)
1/2" (13mm)	7/8" (22mm)
5/8" (16mm)	3/4" (19mm)
3/4" (19mm)	5/8" (16mm)

How to Order:

7256 - ___ - _____

Pivot Style:

Blank	Top and bottom set
TOP	Top pivot only
BTM	Bottom pivot only

Finishes:

US3, US4, US10, US10B, US26, US26D, SP4, SP10, SP28, SP313, SPBLK

7259 Center Hung Pivot Set

7259 Pivot Set

- Center hung consisting of mortised cement case mounted 7259 Bottom Pivot and a head frame mounted 7259 Top Pivot.
- Door Thickness minimum 2" (51mm).
- Radius Stop (A) to clear heel edge of door.
- Pivot Distance (B) 1-3/4" (44mm) minimum from jamb to centerline of pivot pin. Radius heel edge of door, 1-5/8" (41mm) minimum recommended.
- Clearance from bottom edge of door to the floor mounting surface is adjustable from 3/16" (5mm) to 3/4" (19mm) by varying the depth of the mortise (C) in the bottom rail of the door, refer to Table D. Over 3/4" (19mm) from the door to floor mounting surface, consult factory.
- Maximum Load 1000 pounds (455 kg).
- Meets ANSI/BHMA Grade 1.
- Vertical Adjustment based on mortise preparation in bottom rail of the door. Refer to Table D.

Table D

Clearance	Depth of Mortise
3/16" (5mm)	1-3/16" (30mm)
3/8" (10mm)	1" (25mm)
1/2" (13mm)	7/8" (22mm)
5/8" (16mm)	3/4" (19mm)
3/4" (19mm)	5/8" (16mm)

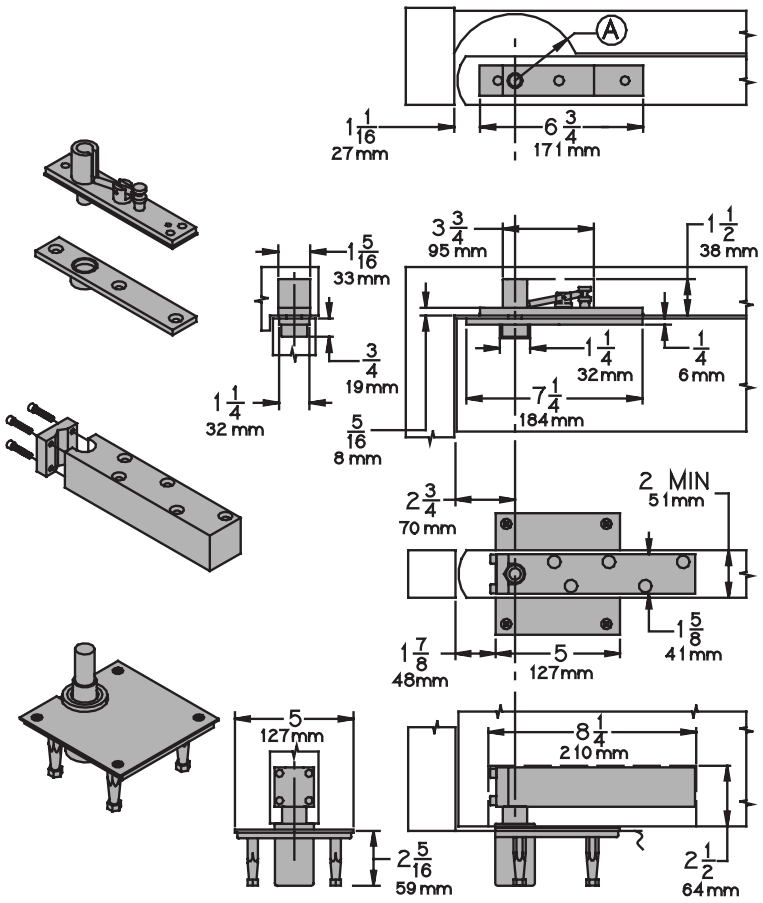

How to Order:

7259 - ___ - _____

Pivot Style:

Blank	Top and bottom set
TOP	Top pivot only
BTM	Bottom pivot only

Finishes:

US3, US4, US10, US10B, US26, US26D, SP4, SP10, SP28, SP313, SPBLK

7200 Series Power Transfer Pivots

7215PT - 7226PT - 7227PT Pivot

- Handed 3/4" intermediate offset pivot compatible with 7210, 7220 or 7230 Series pivot sets.
- Center Line Offset 3/4" (19mm) from face of door and 3/4" from edge of door.
- Power Transfer Pivot features two pairs of conductors providing two separate, low voltage electric power and/or signal circuits between the door leaf and frame.
- Electrical Max. 1.0 Ampere @24V DC per pair of 28 gauge conductors.
- Non-Load Bearing Pivots.
- Door Thickness minimum 1-3/4" (44mm), bevel 1/8" (3mm) in 2" (51 mm).
- Raceway preparation required between the door leaf area and door mounted electrical device. A raceway or other preparation is required to protect wiring routed through all grout filled frames.

Options:

- 8 Wires

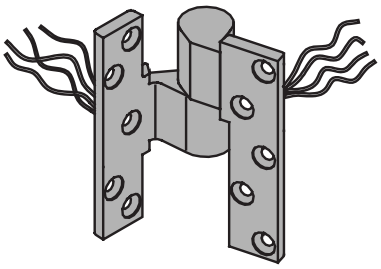

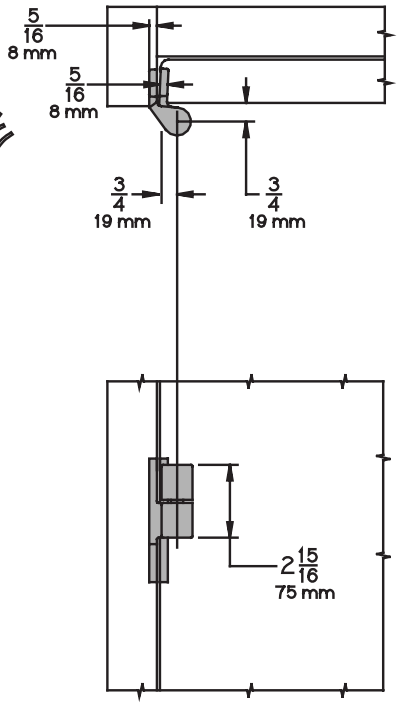

How to Order:

72 ____ PT - ____ - _____

Model:
15
26
27

Handing:
LH Left-hand door
RH Right-hand door

Finishes:
US3, US4, US10, US10B, US26, US26D, SP4, SP10, SP28, SP313, SPBLK

91105F Pocket Pivot

91105F Pocket Pivot Hinge

- Full mortised and non-handed pocket pivot with heavy duty ball bearings.
- UL Listing for 3 hour rated metal doors or 20 minute wood fire doors.
- Stainless steel base material.
- For use on pocket door corridor application common in hospitals, hotels and high rise buildings. The Pocket Pivot allows the door when in the open position to be flush in the pocket of the corridor, thus keeping the door out of the way of traffic.
- Allows door to open 90°.
- Each pivot carries 90 pounds of door weight.
- Recommended quantities per door up to 7' are two pivots. Over 7' openings use three pivots.
- Optional Power Transfer Pivot, features two pairs of conductors providing two separate, low voltage electric power and/or signal circuits. May be used with Von Duprin "EL" exit devices.

How to Order:

91105F - _____ - _____

Finishes:
US3, US10, US32, US32D, SP313, USP

Pivot Type:
Blank Standard
PT Power transfer

91105F Pocket Pivot

Pocket Pivot

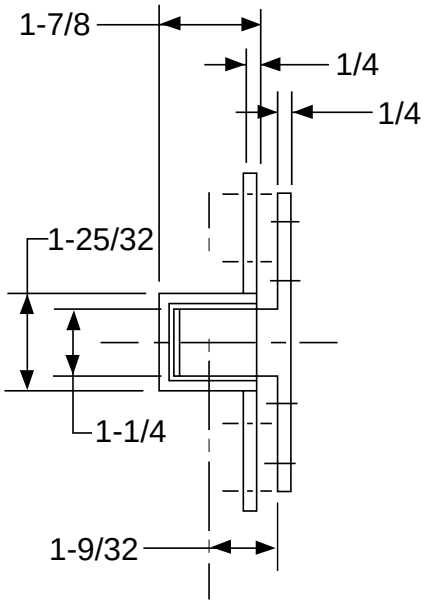

Cutout

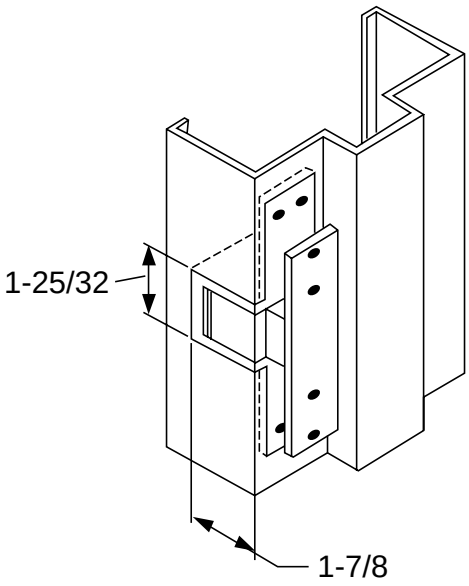

Door Portion

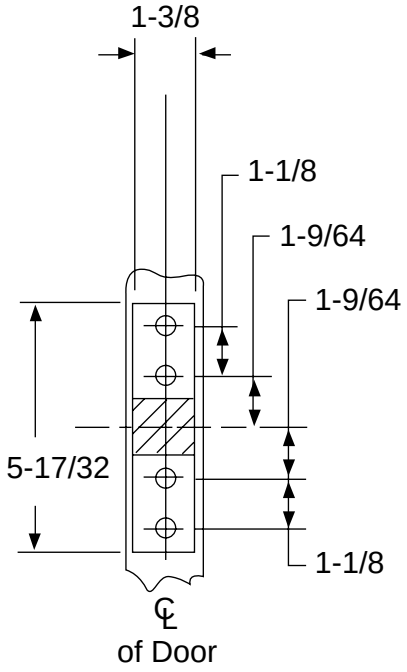

Jamb Portion

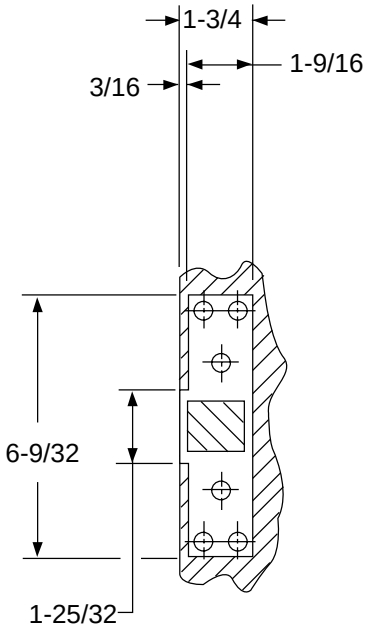

Notes

Notes