TRADITIONAL • CROSS BAR

CONCEALED VERTICAL ROD PANIC Series 6100

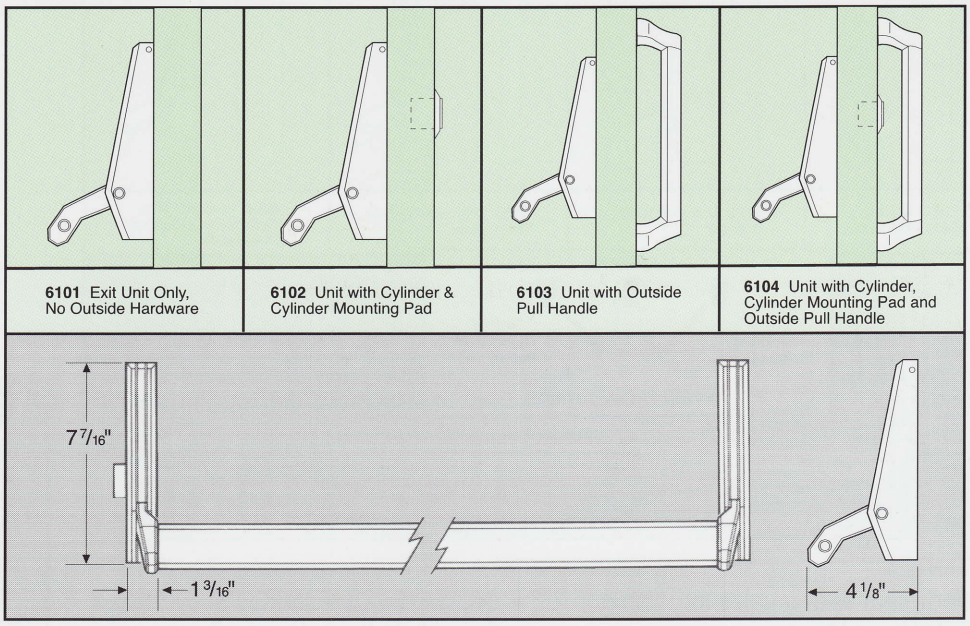

6101 Exit Unit Only, No Outside Hardware

6102 Unit with Cylinder & Cylinder Mounting Pad

6103 Unit with Outside Pull Handle

6104 Unit with Cylinder, Cylinder Mounting Pad and Outside Pull Handle

U.S. AND FOREIGN PATENTS

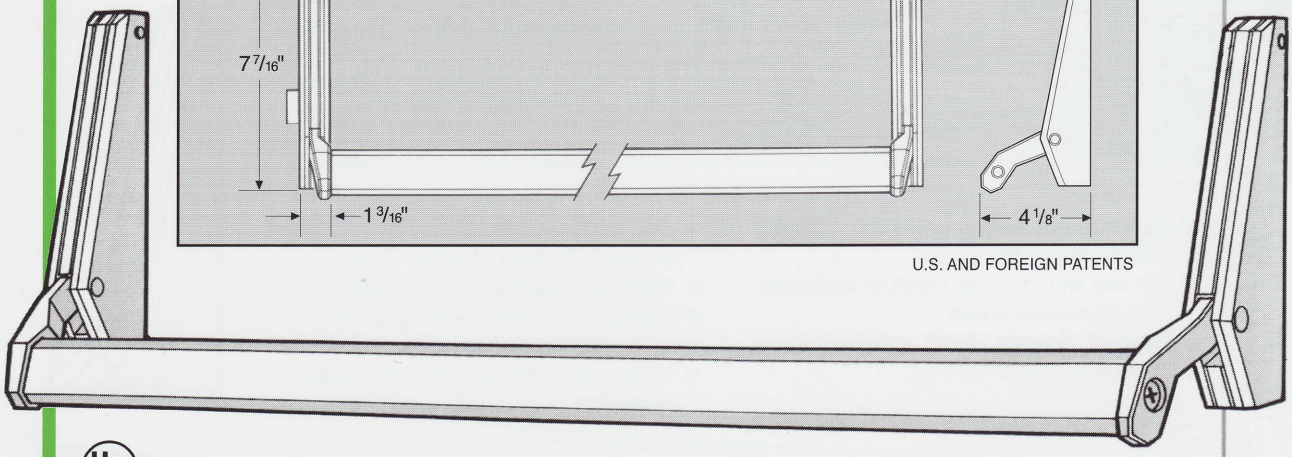

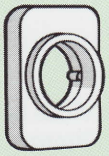

MP-6182 Cylinder Mounting Pad with Locking Ring

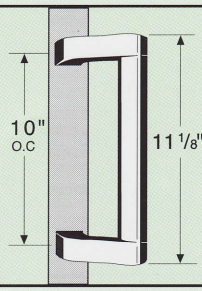

PH-6000 Outside Pull Handle

FEATURES

- Underwriters' Laboratories Inc. Listed - Panic Hardware
- For use with narrow, medium and wide stile Aluminum doors
- Non-Handed, for LHRB or RHRB doors
- Latch Bolts throw 5/8"
- Dogging by Cylinder Key or by Slotted Screw in bottom of inside Pads
- Units use standard Mortise Cylinders with MS type Cam and MP-6182 Cylinder Mounting Pad
- Standard unit fits doors up to 48" in width (cut cross bar to fit) and up to 84" in height
- Units mount on door with concealed fasteners

FINISHES:

AL - ALUMINUM - Inside pads baked Aluminum paint with Aluminum Anodized cross bar

DU - STOREFRONT BRONZE - Inside pads baked Storefront Bronze paint with Bronze Anodized cross bar

WARRANTY: Refer to inside front cover

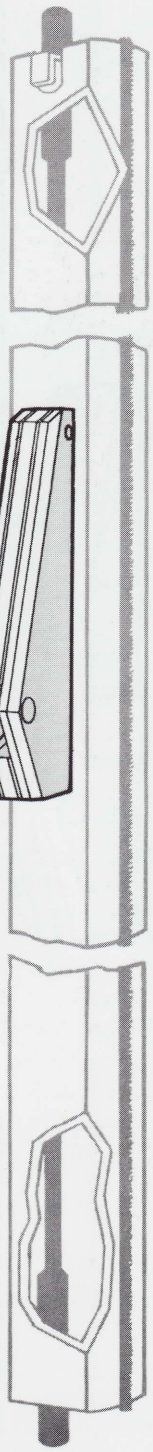

COPYRIGHT 1995 INTERNATIONAL DOOR CLOSERS, INC.

TRADITIONAL • CROSS BAR
RIM PANIC

Series 6300

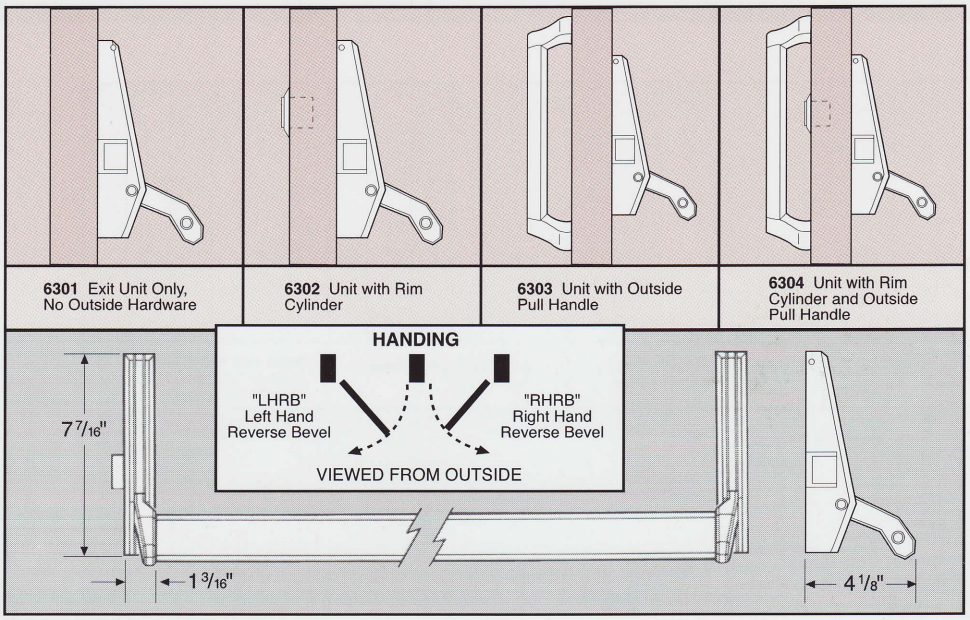

6301 Exit Unit Only, No Outside Hardware

6302 Unit with Rim Cylinder

6303 Unit with Outside Pull Handle

6304 Unit with Rim Cylinder and Outside Pull Handle

FEATURES

- Underwriters' Laboratories Inc. Listed - Panic Hardware
- For use with narrow, medium and wide stile Aluminum doors
- Handed, Specify LHRB or RHRB doors
- Latch Bolt throw 1/2"
- Dogging by Cylinder Key or by Slotted Screw in bottom of inside Pads
- Units use standard Rim Cylinder
- Standard unit fits doors up to 48" in width (cut cross bar to fit)
- Units mount on door with concealed fasteners

FINISHES:

AL - ALUMINUM - Inside pads baked Aluminum paint with Aluminum Anodized cross bar

DU - STOREFRONT BRONZE - Inside pads baked Storefront Bronze paint with Bronze Anodized cross bar

WARRANTY: Refer to inside front cover

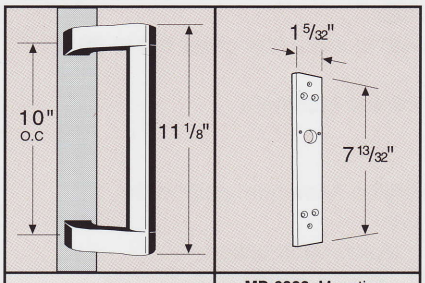

PH-6000 Outside Pull Handle

MP-6322 Mounting Plate for Wood or Metal Doors

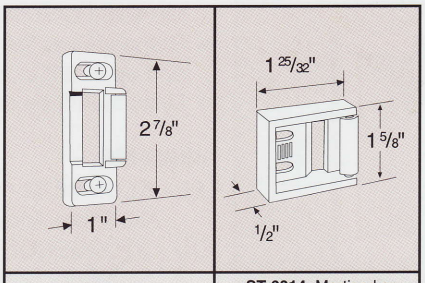

ST-6312 Standard Surface Roller Strike

ST-6314 Mortised or Surface Roller Strike (Optional)

International® door closers inc

EAST:
1920 Air Lane Drive • Nashville, TN 37210
(615) 885-7060 • (800) 225-6737 • FAX: (615) 885-0903

WEST:
1140 North Kraemer Place • Anaheim, CA 92806
(714) 666-0390 • (800) 544-4422 • FAX: (714) 666-2215