International®

Concealed Overhead

HANDICAP and STANDARD Series 100

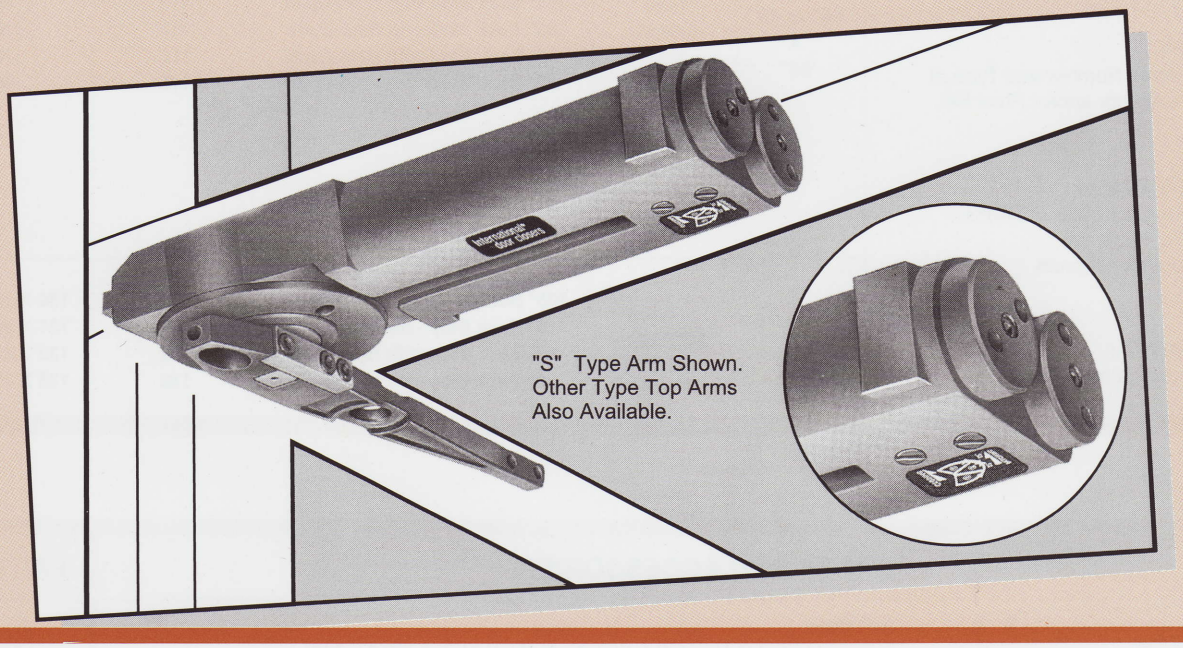

FEATURES

- **CENTER HUNG DOORS:** Double or single Acting (Door stop applied to frame renders unit Single Acting). Adjustable "S" type side loading or "A" type, "K" type and "PT" type end loading top arms are available for center pivoted applications.
- **OFFSET HUNG DOORS:** Single Acting. Offset "JO" and "VO" type top arms are available for butt hinge or offset pivot applications.
- Built-in positive back stop and hold-open positions available:
  - 105° Back Stop with Hold-Open
  - 105° Back Stop - no Hold-Open
  - 90° Back Stop with Hold-Open
  - 90° Back Stop - no Hold-Open
- HANDICAP spring tensions available for use on center pivoted applications:

  ADA 8-1/2 lb. Opening Force Exterior doors.
- Standard spring tensions available:

  MEDIUM
- Two speed control Valves: Closing and Latching speeds controlled by separate regulating valves, fully adjustable after installation.
- Adjustable 3010-DP dual purpose radial ball-bearing bottom pivot sets are provided for floor or threshold mounted (side or end loading) center pivoted installation. 3010-G and 3010-GE bottom pivot sets are available, but must be ordered separately.
- Fits in an aluminum header or transom bar as small as 1-3/4" x 4".
- Positive centering for alignment and to hold door closed against any normal wind or draft.
- Stable hydraulic door check fluid for any climatic operation and constant lubrication.

Center Hung Doors: Complete units for aluminum doors and frames are furnished with top arm assembly (adjustable "S" side loading, "A" end loading, "K" end loading or "PT" end loading), adjustable dual purpose 3010-DP bottom pivot set for floor or threshold mounting (side or end loading) and 3010-FS anchor set with all fasteners.

"S" type side loading top arms and 3010-DP adjustable dual purpose pivot set and 3010-FS anchor set will be furnished unless otherwise specified.

"A" type, "K" type or "PT" type end loading and "JO" or "VO" type offset arms are optional, but must be specified.

"G" and "GE" type pivot sets are available, but must be ordered separately.

Offset Hung Doors: Complete units for offset pivoted or butt hinged aluminum doors and frames are furnished with a "JO" or "VO" type offset arm and 3010-FS anchor set with all fasteners.

(Offset Pivots or Butt Hinges not included).(Top Door Stop/Arm Cover by others - fabrication drawings available).

COPYRIGHT 1996 INTERNATIONAL DOOR CLOSERS, INC.

DOOR SIZE CHART - SCHEDULE OF MODELS AND TYPES

NOTE :
Doors of sizes over the schedule, or of excessive weight, or doors subject to severe wind or draft conditions, or abusive usage, require the next stronger model closer.

SPECIFY :
Closer Model Number and Type of Top Arm, Anchor and/or Pivot Set.

SPECIFY FINISH :
For 3010-JO or 3020-VO Arms
AL - Satin Aluminum
DU - Storefront Bronze

WARRANTY :
Refer to inside front cover

DOOR SIZE	SPRING TENSION	TYPE	MODEL WITH "S" "A" "K" OR "PT" ARM	MODEL WITH "JO" OR "VO" OFFSET ARM
From 36" to 48" X 96"	HANDICAP ADA 8-1/2 lb. Opening Force Exterior	105° Back Stop with Hold-Open	110	NA
		105° Back Stop - no Hold-Open	111	NA
		90° Back Stop with Hold-Open	112	NA
		90° Back Stop - no Hold-Open	113	NA
31" to 41" X 96"	MEDIUM	105° Back Stop with Hold-Open	130	130 X JO or VO
		105° Back Stop - no Hold-Open	131	131 X JO or VO
		90° Back Stop with Hold-Open	132	132 X JO or VO
		90° Back Stop - no Hold-Open	133	133 X JO or VO

	PARTS AND ACCESSORIES	PART NO.
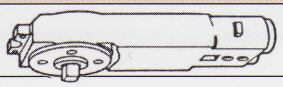	Unit Body (Specify : Spring Tension & degree of Back Stop & Hold Open)	1000-B
	"S" Type Adjustable Side Loading Top Arm Assembly (1/2" Depth Top Rail)	3010-S
	"A" Type End Loading Top Arm Assembly (1" Depth Top Rail)	3010-A
	"K" Type End Loading Top Arm Assembly (5/8" Depth Top Rail)	3010-K
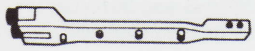	"PT" Type End Loading Top Arm Assembly (7/8" Depth Top Rail)	3010-PT
	"JO" Type Offset Top Arm Assembly 3/4 Mortised Type (9/16" Depth Top Rail) • Painted Arm - Aluminum Storefront Bronze	3010-JO x AL 3010-JO x DU
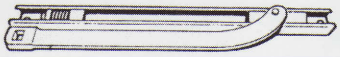	"VO" Type Offset Top Arm Assembly Surface Type (7/8" Depth Top Rail) • Painted Arm - Aluminum Storefront Bronze	3020-VO x AL 3020-VO x DU
	Anchor Set (Standard)	3010-FS
	Anchor Set (Optional) Anchor Set (Optional)	3010-FA 3010-FK
	Adjustable Dual Purpose Bottom Pivot Set (Standard)	3010-DP
	Adjustable Floor Mount Bottom Pivot Set (Optional)	3010-G
	Adjustable Threshold Mount Bottom Pivot Set (Optional)	3010-GE

International® door closers inc

EAST:
1920 Air Lane Drive • Nashville, TN 37210
(615) 885-7060 • (800) 225-6737 • FAX: (615) 885-0903

WEST:
1140 North Kraemer Place • Anaheim, CA 92806
(714) 666-0390 • (800) 544-4422 • FAX: (714) 666-2215