International®

Surface Mounted

STANDARD Series 850

ADJUSTABLE BACK-CHECK Series 880

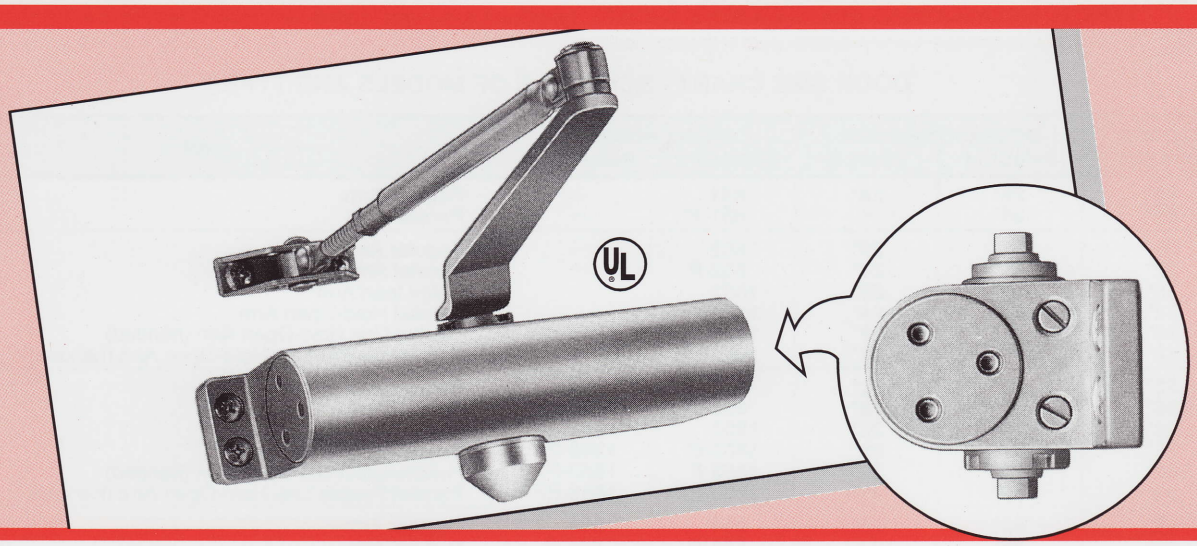

FEATURES

- Underwriters' Laboratories Inc. Listed.
- Range of sizes :
  Standard : 851, 852, 853, 854 and 855
  Back-Check : 883, 884 and 885
- Two Adjustment Valves: Closing and Latching speeds controlled by separate regulating valves, adjustable after installation.
- Series 880 has adjustable Back-Check function controlled by a separate regulating valve, adjustable after installation.
- Universal application. Non-handed for standard, top jamb or parallel arm installation.
- Available with regular, hold-open or fusible link hold-open arms.
- Regular arms are equipped with a 15% (±7 1/2%) power adjustment bracket.
- Hold-open arms are adjustable for holding from 90° to 180°.
- Rack and pinion mechanism contained in a high tensile precision cast aluminum housing assures the highest quality.
- Stable hydraulic door check fluid for any climatic operation and constant lubrication.
- Narrow design permits installation on most modern glass and aluminum doors without adaptors.
- Attractive "automotive type" finishes:
  AL - Aluminum
  BZ - Hardware Bronze (Gold)
  DU - Storefront Bronze

DESCRIPTION		SIZE			
		1	2	3	4 & 5
Length of Closer Body	A	7 1/16"	8 1/16"	8 7/8"	9 13/16"
Horizontal Mounting Holes	B	6 3/8"	7 3/8"	8 3/16"	9 1/16"
Vertical Mounting Holes	C	3/4"	3/4"	3/4"	3/4"
Overall Height	D	4 1/16"	4 3/4"	4 3/4"	4 3/4"
Top of Door to Bottom of Closer Body	E	1 15/16"	2 1/4"	2 1/4"	2 1/4"
Height of Closer Body	F	1 5/8"	1 3/4"	1 3/4"	1 3/4"
Projection from Door	G	2 9/16"	3"	3"	3"

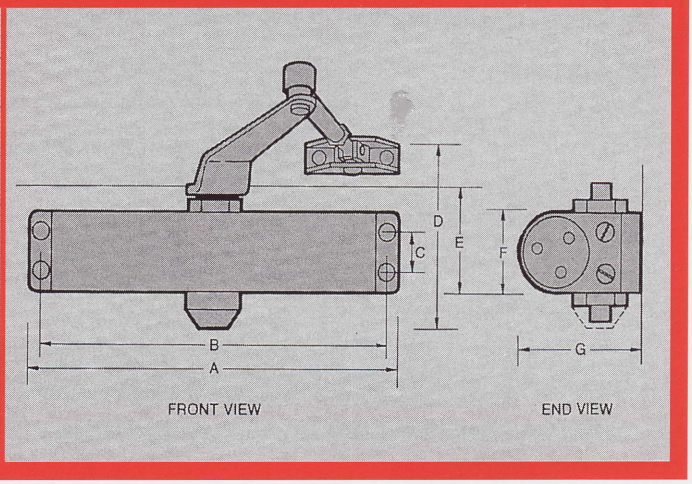

COPYRIGHT 1995 INTERNATIONAL DOOR CLOSERS, INC.

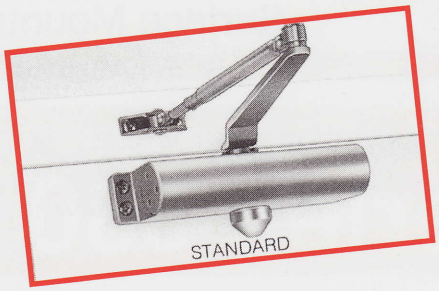

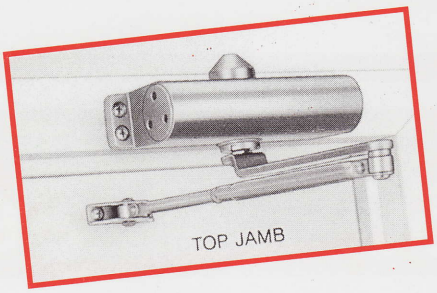

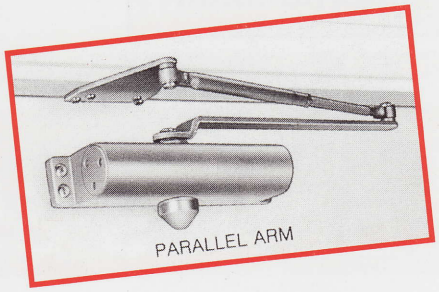

TYPICAL INSTALLATIONS (REGULAR ARMS SHOWN) Hold-Open Arms and Fusible Link Hold-Open Arms are similar

DOOR SIZE CHART - SCHEDULE OF MODELS AND TYPES

INTERIOR DOOR SIZE	EXTERIOR DOOR SIZE Swing Out	EXTERIOR DOOR SIZE Swing In	MODEL NUMBER Standard	MODEL NUMBER Back-Check	TYPE
32"	28"	24"	851	—	Regular Arm
28"	24"	—	851-P	—	Parallel Arm
36"	32"	28"	852	—	Regular Arm
32"	28"	24"	852-P	—	Parallel Arm
36"	32"	28"	1852	—	Hold-Open Arm
32"	28"	24"	1852-P	—	Parallel Hold-Open Arm
36"	32"	28"	1852-F	—	Fusible Link Hold-Open Arm (handed)
32"	28"	24"	1852-PF	—	Parallel Fusible Link Hold-Open Arm (handed)
42"	36"	32"	853	883	Regular Arm
36"	32"	28"	853-P	883-P	Parallel Arm
42"	36"	32"	1853	1883	Hold-Open Arm
36"	32"	28"	1853-P	1883-P	Parallel Hold-Open Arm
42"	36"	32"	1853-F	1883-F	Fusible Link Hold-Open Arm (handed)
36"	32"	28"	1853-PF	1883-PF	Parallel Fusible Link Hold-Open Arm (handed)
48"	42"	36"	854	884	Regular Arm
42"	36"	32"	854-P	884-P	Parallel Arm
48"	42"	36"	1854	1884	Hold-Open Arm
42"	36"	32"	1854-P	1884-P	Parallel Hold-Open Arm
48"	42"	36"	1854-F	1884-F	Fusible Link Hold-Open Arm (handed)
42"	36"	32"	1854-PF	1884-PF	Parallel Fusible Link Hold-Open Arm (handed)
54"	48"	42"	855	885	Regular Arm
48"	42"	36"	855-P	885-P	Parallel Arm
54"	48"	42"	1855	1885	Hold-Open Arm
48"	42"	36"	1855-P	1885-P	Parallel Hold-Open Arm
54"	48"	42"	1855-F	1885-F	Fusible Link Hold-Open Arm (handed)
48"	42"	36"	1855-PF	1885-PF	Parallel Fusible Link Hold-Open Arm (handed)

NOTE:
Doors of unusual height or weight, or doors subject to severe wind or draft conditions, or abusive usage, require the next larger model closer than the schedule.

SPECIFY:
Closer Model or Part Number

SPECIFY FINISH:
AL - Aluminum
BZ - Hardware Bronze (Gold)
DU - Storefront Bronze

SPECIFY HAND:
"RH" or "LH" - for all Fusible Link Hold-Open Arms

WARRANTY:
Refer to inside front cover.

PARTS AND ACCESSORIES - SERIES 850 AND 880

DESCRIPTION	SIZE	1	2	3	4 & 5
Main Arm	Part #	510	520	520	520
Regular Forearm	Part #	511	521	521	521
Hold-Open Forearm	Part #	None	522	522	522
Fusible Link Hold-Open Forearm (handed)	Part #	None	523	523	523
Top Jamb Forearm Extender	Part #	514	514	514	514
Parallel Bracket for Regular Arm	Part #	515	525	525	525
Parallel Bracket - for Hold-Open or Fusible Link Hold-Open Arm	Part #	None	526	526	526
Flat Drop Bracket	Part #	None	527	537	547
Top Jamb Bracket	Part #	None	None	TJB-53	TJB-54
Dress Cover	Part #	None	DC-8000	DC-8000	None
Thru Bolt and Grommet Nut (Set of 4 each)	Part #	TBGN-50	TBGN-50	TBGN-50	TBGN-50

International® door closers inc

EAST:
1920 Air Lane Drive • Nashville, TN 37210
(615) 885-7060 • (800) 225-6737 • FAX: (615) 885-0903

WEST:
1140 North Kraemer Place • Anaheim, CA 92806
(714) 666-0390 • (800) 544-4422 • FAX: (714) 666-2215