International®

Surface Mounted

STANDARD Series 750

ADJUSTABLE BACK-CHECK Series 780

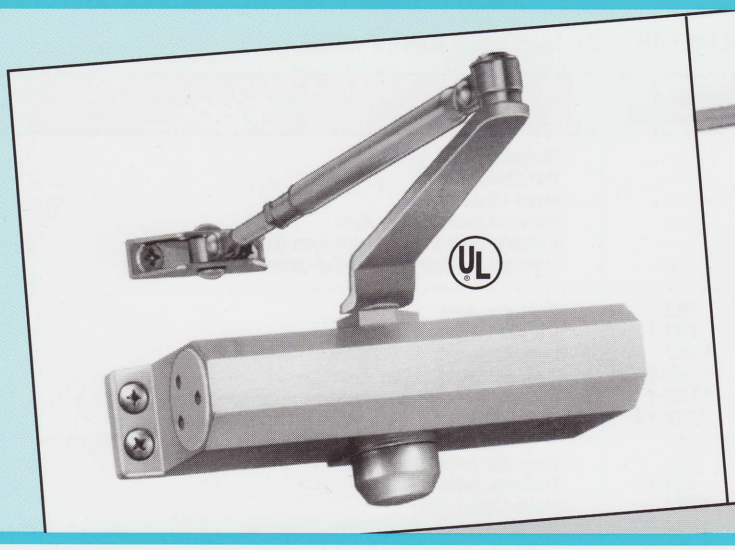

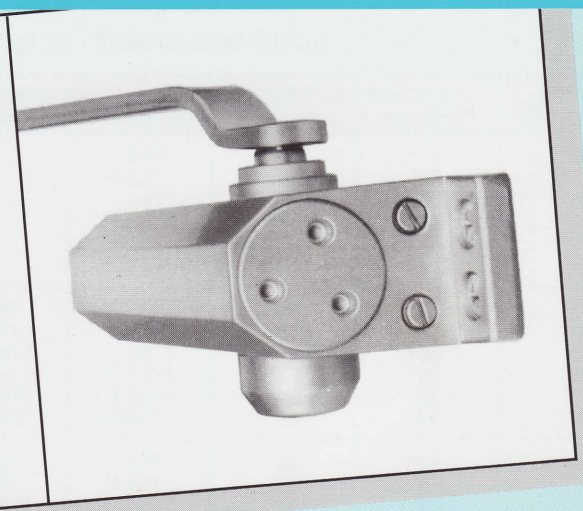

FEATURES

- Underwriters' Laboratories Inc. Listed.
- Range of sizes :
  Standard : 752, 753, 754 and 755.
  Back-Check : 783, 784 and 785.
- One closer body size for all sizes.
- Two Speed Control Valves: Closing and Latching speeds controlled by separate regulating valves, adjustable after installation.
- Series 780 has adjustable Back-Check function controlled by a separate regulating valve, adjustable after installation.
- Universal application. Non-handed for standard, top jamb or parallel arm installation.
- Available with regular, hold-open or fusible link hold-open arms.
- Regular arms are equipped with a 15% ($\pm 7^1/_2$%) power adjustment bracket.
- Hold-open arms are adjustable for holding from 90° to 180°.
- Rack and pinion mechanism contained in a high tensile precision cast aluminum housing assures the highest quality.
- Stable hydraulic door check fluid for any climatic operation and constant lubrication.
- Narrow design permits installation on most modern glass and aluminum doors without adaptors.
- Attractive "automotive type" finishes:
  AL - Aluminum
  BZ - Hardware Bronze (Gold)
  DU - Storefront Bronze

DESCRIPTION		SIZE 2, 3, 4 & 5
Length of Closer Body	A	$8^7/_8$"
Horizontal Mounting Holes	B	$8^3/_{16}$"
Vertical Mounting Holes	C	$^3/_4$"
Overall Height	D	$4^9/_{16}$"
Top of Door to Bottom of Closer Body	E	$2^3/_{16}$"
Height of Closer Body	F	$1^{21}/_{32}$"
Projection from Door	G	$2^{27}/_{32}$"

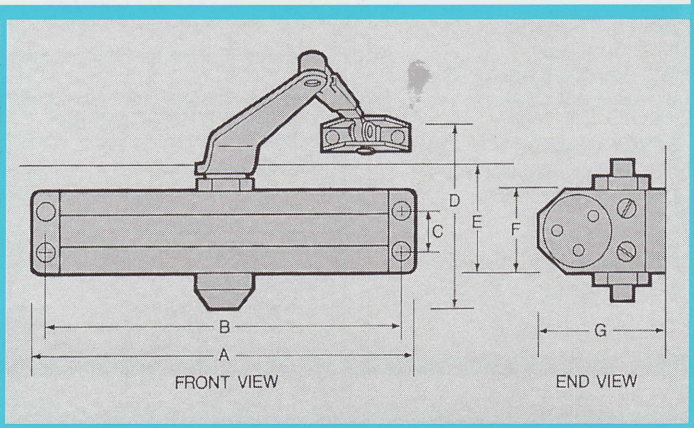

COPYRIGHT 1990 INTERNATIONAL DOOR CLOSERS, INC.

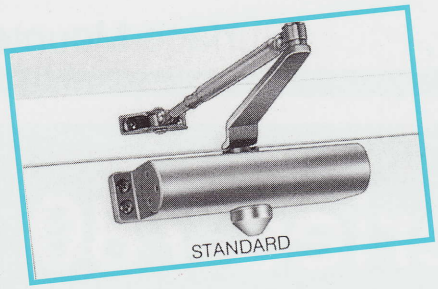

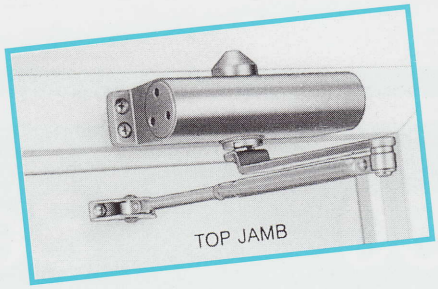

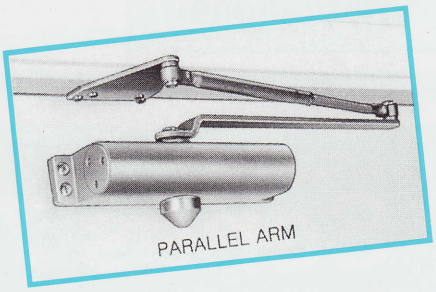

TYPICAL INSTALLATIONS (REGULAR ARMS SHOWN) Hold-Open Arms and Fusible Link Hold-Open Arms are similar

DOOR SIZE CHART - SCHEDULE OF MODELS AND TYPES

INTERIOR DOOR SIZE	EXTERIOR DOOR SIZE Swing Out	EXTERIOR DOOR SIZE Swing In	MODEL NUMBER Standard	MODEL NUMBER Back-Check	TYPE
36"	32"	28"	752	—	Regular Arm
32"	28"	24"	752-P	—	Parallel Arm
36"	32"	28"	1752	—	Hold-Open Arm
32"	28"	24"	1752-P	—	Parallel Hold-Open Arm
36"	32"	28"	1752-F	—	Fusible Link Hold-Open Arm (handed)
32"	28"	24"	1752-PF	—	Parallel Fusible Link Hold-Open Arm (handed)
42"	36"	32"	753	783	Regular Arm
36"	32"	28"	753-P	783-P	Parallel Arm
42"	36"	32"	1753	1783	Hold-Open Arm
36"	32"	28"	1753-P	1783-P	Parallel Hold-Open Arm
42"	36"	32"	1753-F	1783-F	Fusible Link Hold-Open Arm (handed)
36"	32"	28"	1753-PF	1783-PF	Parallel Fusible Link Hold-Open Arm (handed)
48"	42"	36"	754	784	Regular Arm
42"	36"	32"	754-P	784-P	Parallel Arm
48"	42"	36"	1754	1784	Hold-Open Arm
42"	36"	32"	1754-P	1784-P	Parallel Hold-Open Arm
48"	42"	36"	1754-F	1784-F	Fusible Link Hold-Open Arm (handed)
42"	36"	32"	1754-PF	1784-PF	Parallel Fusible Link Hold-Open Arm (handed)
54"	48"	42"	755	785	Regular Arm
48"	42"	36"	755-P	785-P	Parallel Arm
54"	48"	42"	1755	1785	Hold-Open Arm
48"	42"	36"	1755-P	1785-P	Parallel Hold-Open Arm
54"	48"	42"	1755-F	1785-F	Fusible Link Hold-Open Arm (handed)
48"	42"	36"	1755-PF	1785-PF	Parallel Fusible Link Hold-Open Arm (handed)

NOTE:
Doors of unusual height or weight, or doors subject to severe wind or draft conditions, or abusive usage, require the next larger model closer than the schedule.

SPECIFY:
Closer Model or Part Number

SPECIFY FINISH:
AL - Aluminum
BZ - Hardware Bronze (Gold)
DU - Storefront Bronze

SPECIFY HAND:
"RH" or "LH" - for all Fusible Link Hold-Open Arms

WARRANTY:
Refer to inside front cover

PARTS & ACCESSORIES - SERIES 750 & 780

DESCRIPTION	SIZE	2, 3, 4 & 5
Main Arm	Part #	520
Regular Forearm	Part #	521
Hold-Open Forearm	Part #	522
Fusible Link Hold-Open Forearm (handed)	Part #	523
Top Jamb Forearm Extender	Part #	514
Parallel Bracket for Regular Arm	Part #	525
Parallel Bracket - for Hold-Open or Fusible Link Hold-Open Arm	Part #	526
Flat Drop Bracket	Part #	537
Top Jamb Bracket	Part #	TJB-53
Dress Cover	Part #	DC-8000
Thru Bolt and Grommet Nut (Set of 4 each)	Part #	TBGN-50

International® door closers inc

EAST:
1920 Air Lane Drive • Nashville, TN 37210
(615) 885-7060 • (800) 225-6737 • FAX: (615) 885-0903

WEST:
1140 North Kraemer Place • Anaheim, CA 92806
(714) 666-0390 • (800) 544-4422 • FAX: (714) 666-2215