International®

Adjustable Spring Power - Surface Mounted

Series 9000

FEATURES

- Complies with ANSI A156.4 Grade 1
- Barrier Free Operation to comply with Federal Accessibility Standards(ADA): Complying with ANSI A117.1(4.13.11)
- Underwriters' Laboratories Inc. Listed
- ADA (Handicap) multi-sized closers with adjustable Spring Power for a range of sizes adjustable after installation.
- CLOSER FUNCTIONS:
  Model 9001: adjustable spring power (8-1/2 lb.Opening Force to Size 5) with adjustable Back-Check controlled by a separate regulating valve.
  Model 9003: adjustable spring power (5 lb.Opening Force to Size 4) with both adjustable Back-Check and adjustable Delayed Closing Action controlled by separate regulating valves.
- Two Speed Control Valves: Closing and Latching speeds controlled by separate regulating valves, adjustable after installation.
- Universal Application: Non-handed for standard, top jamb or parallel arm installation (parallel arm bracket included).
- Rack and pinion mechanism contained in a high tensile precision cast aluminum housing.
- Stable hydraulic door check fluid for any climatic operation and constant lubrication.
- Furnished with a high impact molded PVC Dress Cover (door closer body casting is finished for use without the Dress Cover).
- Dress Cover and Arm Assembly available in 605 (US3) Bright Brass or 625 (US26) Bright Chrome finishes.
- Attractive baked enamel finishes:

  AL – Aluminum
  BZ – Hardware Bronze (Gold)
  DU – Storefront Bronze

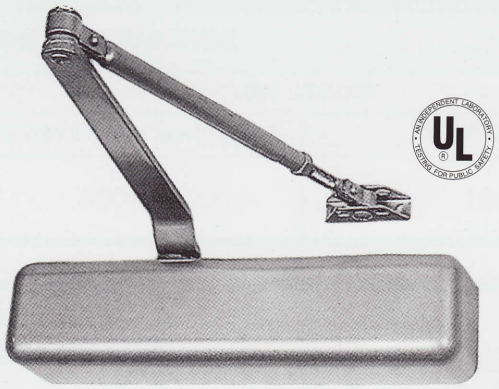

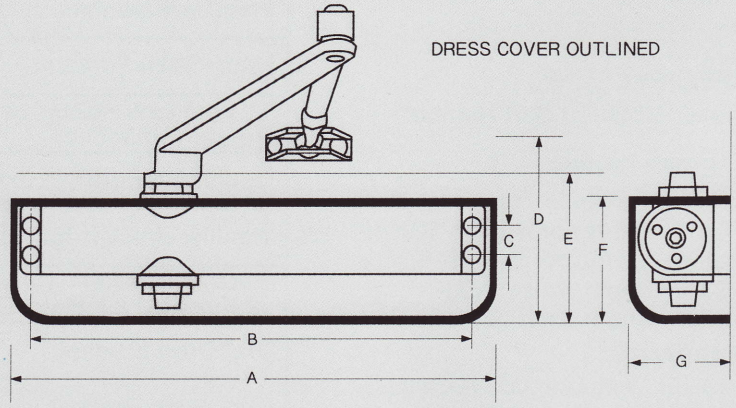

DESCRIPTION		MODEL NUMBER 9001 and 9003
Length of Closer	A	12–1/8"
Horizontal Mounting Holes	B	11–3/32"
Vertical Mounting Holes	C	3/4"
Overall Height	D	4–9/16"
Top of Door to Bottom of Closer	E	3–5/16"
Height of Closer	F	2–13/16"
Projection from Door	G	2–9/16"

COPYRIGHT 2000 INTERNATIONAL DOOR CLOSERS, INC.

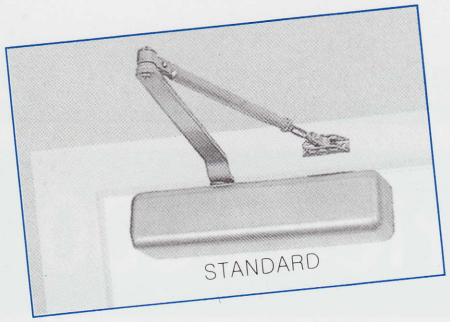

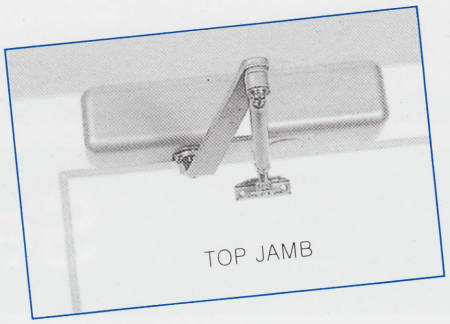

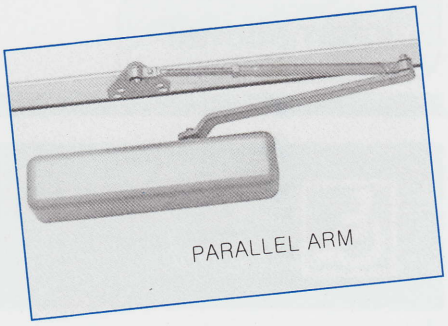

TYPICAL INSTALLATIONS (REGULAR ARMS SHOWN) Hold-Open Arms and Fusible Link Hold-Open Arms are similar

SCHEDULE OF MODELS AND TYPES		
MODEL NO.		TYPE
BACK-CHECK	BACK-CHECK/DELAYED ACTION	
9001	9003	Regular Arm

NOTE:
Doors of unusual height or weight, or doors subject to severe wind or draft conditions, or abusive usage require one or two more full turns of hex spring adjustment nut than shown on the installation instructions.

SPECIFY:
Closer Model or Part Number.

SPECIFY FINISH:
AL —Aluminum
BZ —Hardware Bronze (Gold)
DU —Storefront Bronze
US3 —Bright Brass(605)
US26 —Bright Chrome(625)

WARRANTY:
Five (5) Year Limited Warranty (see Manufacturers' Warranty)

PARTS AND ACCESSORIES-SERIES 9000
(PAINTED FINISH ONLY)

DESCRIPTION			
Main Arm		Part #	920
Regular Forearm		Part #	521
Hold-Open Forearm		Part #	522
Fusible Link Hold-Open Forearm (handed)		Part #	523
Top Jamb Forearm Extender		Part #	514
Parallel Bracket for Regular Arm		Part #	925
Parallel Bracket - for Hold-Open or Fusible Link Hold-Open Arm		Part #	526
Flat Drop Bracket		Part #	9007
Top Jamb Bracket		Part #	TJB—9000

COMPARISON CHART 9000 SERIES

International® Series 9000	Norton 8000	Yale 3000	Dorma 6600 7600	DoorMatic/LCN SC80 1460	Global TC400 TC500	Cal Royal 900	Sargent 1230 1430	Jackson [illegible]500	Parker 900

This chart has been prepared comparing functions of door closers. Since no products are exactly alike, the data on this chart represents our judgment of which products are most similar. Because information has been obtained from trade sources, it is not guaranteed nor represented that any specific product exactly equals any other product.

International® door closers inc

EAST:
1920 Air Lane Drive • Nashville, TN 37210
(615) 885-7060 • (800) 225-6737 • FAX: (615) 885-0903

WEST:
1140 North Kraemer Place • Anaheim, CA 92806
(714) 666-0390 • (800) 544-4422 • FAX: (714) 666-2215