International®

Adjustable Spring Power - Surface Mounted

WITH DRESS COVER Series 5000

NO DRESS COVER Series 5050

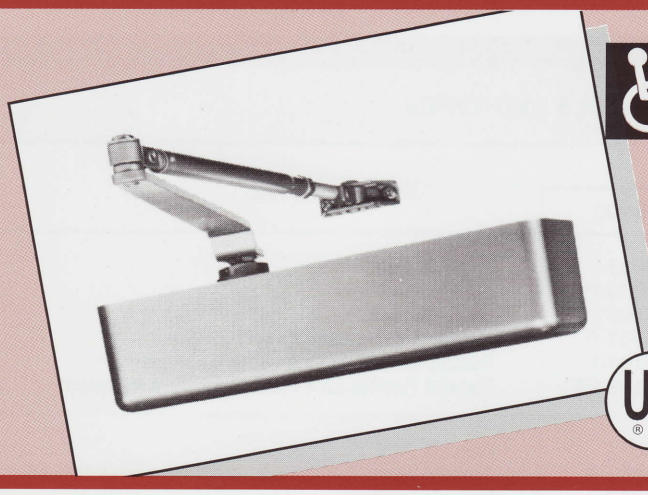

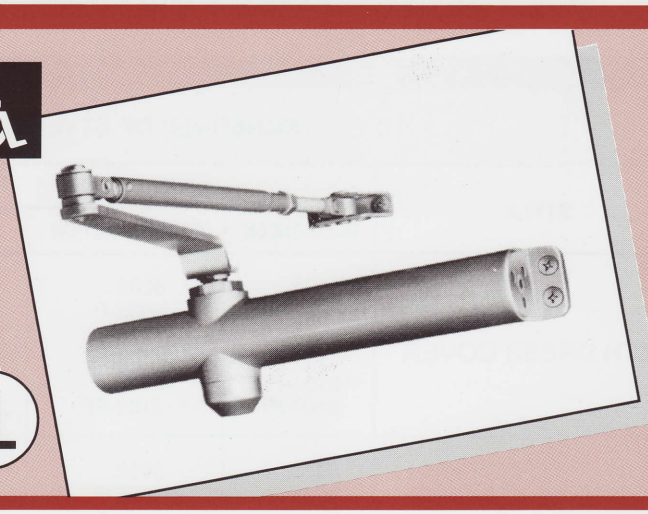

FEATURES

- Underwriters' Laboratories Inc. Listed.
- ADA (Handicap) multi-sized closers with adjustable spring power for a range of sizes adjustable after installation:

  5001 & 5051 . . .8½ lb.opening force to a size 5
  5002 & 5052 . . . . . 5 lb.opening force to a size 4
  5003 & 5053 . . . . . 5 lb.opening force to a size 4
- **CLOSER FUNCTIONS:**

  5001 & 5051; adjustable spring power with adjustable Back-Check controlled by a separate regulating valve, adjustable after installation.

  5002 & 5052; adjustable spring power with adjustable delayed closing action controlled by a separate regulating valve, adjustable after installation.

  5003 & 5053; Basic-adjustable spring power only.
- Two Speed Control Valves: Closing and Latching speeds controlled by separate regulating valves, adjustable after installation.
- Universal application. Non-handed for standard, top jamb or parallel arm installation.
- Series 5000 furnished with dress cover. Series 5050 without dress cover has a narrow design permitting installation on most modern glass and aluminum doors without adaptors.
- Rack and pinion mechanism contained in a high tensile precision cast aluminum housing.
- Stable hydraulic door check fluid for any climatic operation and constant lubrication.
- Furnished with regular, hold-open or fusible link hold-open arms.
- Hold-open arms are adjustable for holding from 90° to 180°
- Attractive "automotive type" finishes:

  AL - Aluminum
  BZ - Hardware Bronze (Gold)
  DU - Storefront Bronze

DESCRIPTION		WITH DRESS COVER	NO DRESS COVER
Length of Closer	A	13"	12 11/16"
Horizontal Mounting Holes	B	12"	12"
Vertical Mounting Holes	C	3/4"	3/4"
Overall Height	D	5 1/8"	5 1/16"
Top of Door to Bottom of Closer	E	3 1/2"	3 7/16"
Height of Closer	F	3"	2 7/8"
Projection from Door	G	2 5/16"	2 3/16"

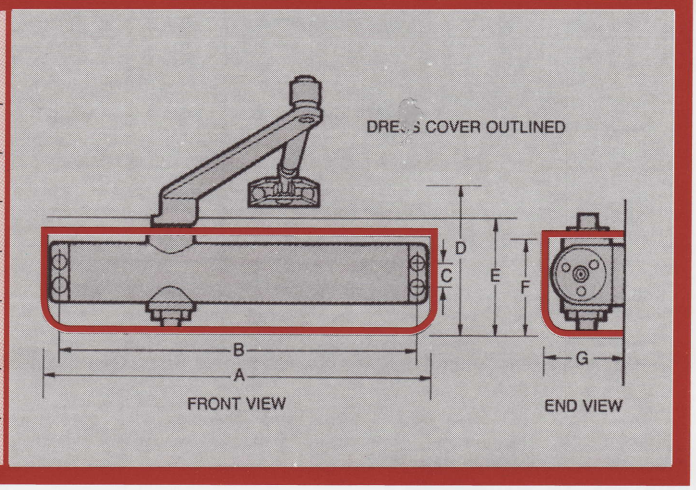

COPYRIGHT 1995 INTERNATIONAL DOOR CLOSERS, INC.

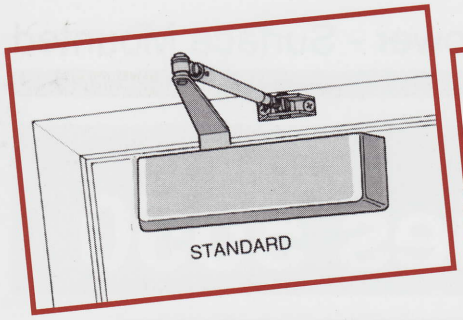

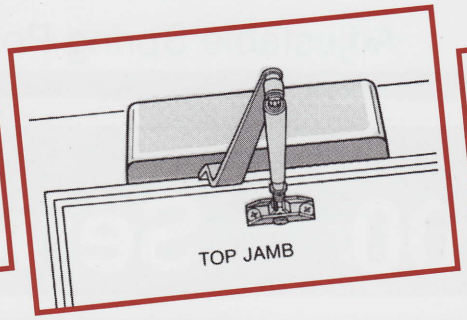

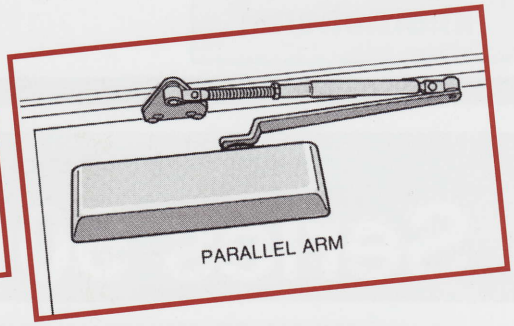

TYPICAL INSTALLATIONS (REGULAR ARMS SHOWN) Hold-Open Arms and Fusible Link Hold-Open Arms are similar

SCHEDULE OF STYLES, MODELS AND TYPES

STYLE	MODEL NO.			TYPE
	BACK-CHECK	DELAYED ACTION	BASIC	
WITH DRESS COVER	5001	5002	5003	Regular Arm
	5001-P	5002-P	5003-P	Parallel Arm
	5101	5102	5103	Hold-Open Arm
	5101-P	5102-P	5103-P	Parallel Hold-Open Arm
	5101-F	5102-F	5103-F	Fusible Link Hold-Open Arm (handed)
	5101-PF	5102-PF	5103-PF	Parallel Fusible Link Hold-Open Arm (handed)
NO DRESS COVER	5051	5052	5053	Regular Arm
	5051-P	5052-P	5053-P	Parallel Arm
	5151	5152	5153	Hold-Open Arm
	5151-P	5152-P	5153-P	Parallel Hold-Open Arm
	5151-F	5152-F	5153-F	Fusible Link Hold-Open Arm (handed)
	5151-PF	5152-PF	5153-PF	Parallel Fusible Link Hold-Open Arm (handed)

NOTE: Doors of unusual height or weight, or doors subject to severe wind or draft conditions, or abusive usage require one or two more full turns of hex spring adjustment nut than shown on the installation instructions.

SPECIFY:
Closer Model or Part Number

SPECIFY FINISH:
AL - Aluminum
BZ - Hardware Bronze (Gold)
DU - Storefront Bronze

SPECIFY:
"RH" or "LH" - for all Fusible Link Hold-Open Arms.

WARRANTY:
Refer to inside front cover.

PARTS AND ACCESSORIES - SERIES 5000 AND 5050

Main Arm	Part #	520	Parallel Bracket - for Hold-Open or Fusible Link Hold-Open Arm	Part #	526
Regular Forearm	Part #	521	Flat Drop Bracket for Closers - With Dress Cover	Part #	5007
Hold-Open Forearm	Part #	522	Flat Drop Bracket for Closers - No Dress Cover	Part #	5057
Fusible Link Hold-Open Forearm (handed)	Part #	523	Top Jamb Bracket for Closers - With or Without Dress Cover	Part #	5058
Top Jamb Forearm Extender	Part #	514	Dress Cover	Part #	DC-5000
Parallel Bracket for Regular Arm	Part #	525	Thru Bolt and Grommet Nut (Set of 4 each)	Part #	TBGN-50

International® door closers inc

EAST:
1920 Air Lane Drive • Nashville, TN 37210
(615) 885-7060 • (800) 225-6737 • FAX: (615) 885-0903

WEST:
1140 North Kraemer Place • Anaheim, CA 92806
(714) 666-0390 • (800) 544-4422 • FAX: (714) 666-2215