Handicap Door Closers

Series 300

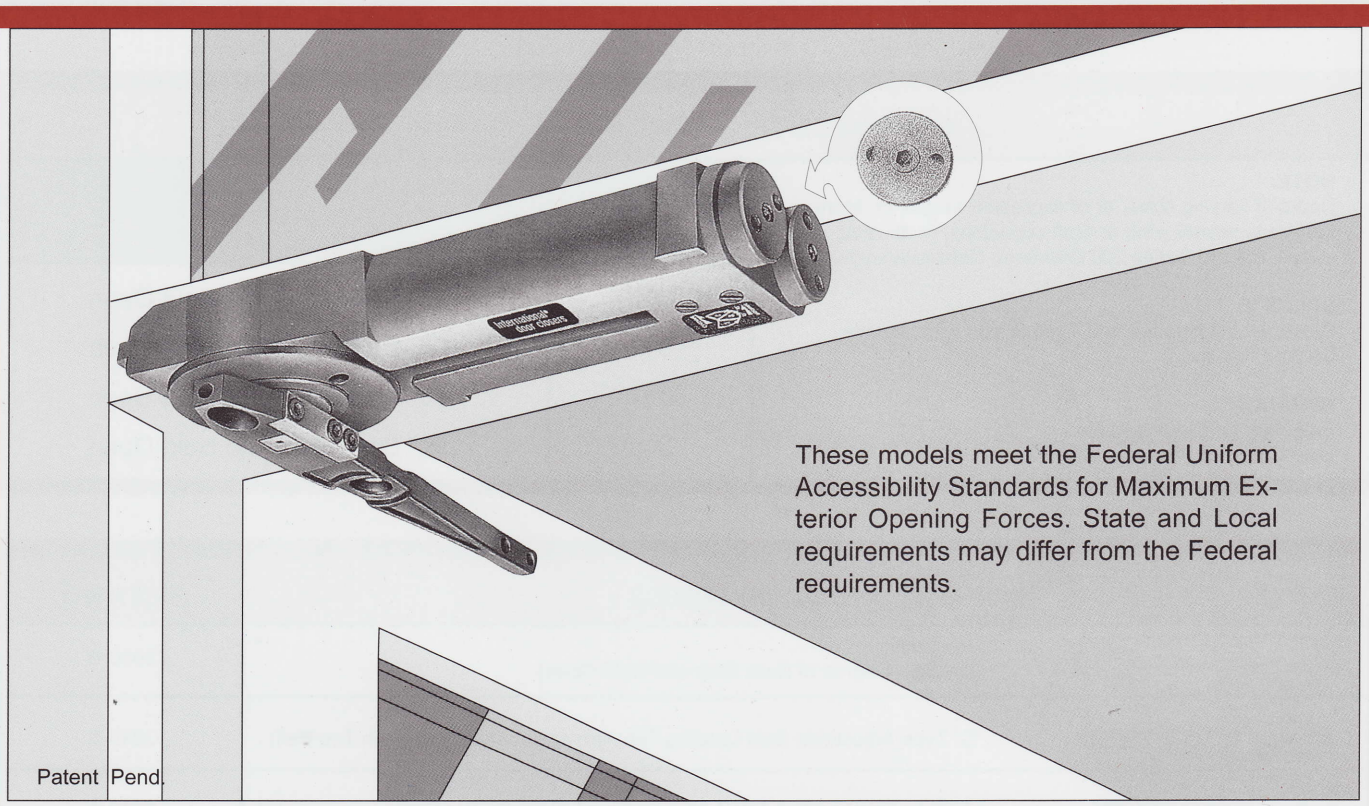

These models meet the Federal Uniform Accessibility Standards for Maximum Exterior Opening Forces. State and Local requirements may differ from the Federal requirements.

FEATURES

- **ADA** (Handicap) multi-sized closer with Adjustable Spring Power for a range of sizes from 8½ lbs of Opening Force to medium spring tension, fully adjustable after installation.
- Barrier Free Operation to comply with Federal Accessibility Standards **(ADA)** ANSI A117.1.
- Underwriters' Laboratories Inc. Fire Endurance Tested, conforming to UL10C and UBC7.2 (1997) for Fire Safety.
- Built-in positive back stop and hold-open positions available:
  - 105° Back Stop with Hold-Open
  - 105° Back Stop - no Hold-Open
  - 90° Back Stop with Hold-Open
  - 90° Back Stop - no Hold-Open
- Suitable for both Center Hung (Double or Single Acting) and Offset Doors.
- Two Adjustment Valves: Closing and Latching speeds controlled by separate regulating valves, fully adjustable after installation.
- Adjustable "S" type side loading, or "A" type, "K" type and "PT" type end loading top arms are available for center pivoted applications.
- Offset "JO" and "VO" type top arms are available for butt hinge or offset pivot applications (may not meet handicap force requirements).
- Adjustable (3010-DP) dual purpose radial ball bearing bottom pivot set is standard for floor or threshold center pivoted installation. 3010-GE and 3010-G bottom pivot sets are available, but must be ordered separately.
- Fits in an aluminum header or transom bar as small as 1¾" x 4".
- Stable hydraulic door check fluid for any climatic operation and constant lubrication.

COPYRIGHT 2002 INTERNATIONAL DOOR CLOSERS, INC.

Center Hung Doors: Complete units for aluminum doors and frames are furnished with top arm assembly (adjustable "S" side loading, "A" end loading, "K" end loading or "PT" end loading), adjustable dual purpose 3010-DP bottom pivot set for floor or threshold mounting (side or end loading) and 3010-FSP anchor set with all fasteners.

"S" type side loading top arms and 3010-DP adjustable dual purpose pivot set and 3010-FSP anchor set will be furnished unless otherwise specified.

"A" type, "K" type or "PT" type end loading and "JO" or "VO" type offset arms are optional, but must be specified.

"G" and "GE" type pivot sets are available, but must be ordered separately.

Offset Hung Doors: Complete units for offset pivoted or butt hinged aluminum doors and frames are furnished with a "JO" or "VO" type offset arm and 3010-FSP anchor set with all fasteners.

(Offset Pivots or Butt Hinges not included). (Top Door Stop/Arm Cover by others - fabrication drawings available).

SCHEDULE OF MODELS AND TYPES

NOTE:
Doors of varying sizes, or of excessive weight, or doors subject to severe wind or draft conditions, or abusive usage, refer to Series 200 Overhead Concealed closers.

SPECIFY:
Closer Model Number and Type of Top Arm, Anchor and/or Pivot Set.

WARRANTY:
Five Year Limited Warranty
(see Manufacturer's Warranty)

MODEL NUMBER	TYPE
310	105° Back Stop with Hold-Open
311	105° Back Stop - no Hold-Open
312	90° Back Stop with Hold-Open
313	90° Back Stop - no Hold-Open

	PARTS AND ACCESSORIES	PART NO.
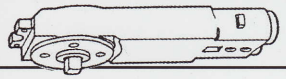	Unit Body (specify : Degree of Back Stop and Hold-Open)	3000-B
	"S" Type Adjustable Side Loading Top Arm Assembly (1/2" Depth Top Rail)	3010-S
	"A" Type End Loading Top Arm Assembly (1" Depth Top Rail)	3010-A
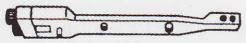	"K" Type End Loading Top Arm Assembly (5/8" Depth Top Rail)	3010-K
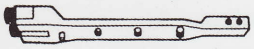	"PT" Type End Loading Top Arm Assembly (7/8" Depth Top Rail)	3010-PT
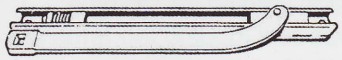	"JO" Type Offset Top Arm Assembly Mortised Type (9/16" Depth Top Rail) ● Painted Arm - Aluminum Storefront Bronze	3010-JO x AL 3010-JO x DU
	"VO" Type Offset Top Arm Assembly Surface Type (7/8" Depth Top Rail) ● Painted Arm - Aluminum Storefront Bronze	3020-VO x AL 3020-VO x DU
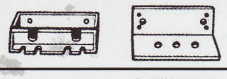	Anchor Set (Standard)	3010-FSP
	Anchor Set (Optional)	3010-FKP
	Adjustable Dual Purpose Bottom Pivot Set (Standard)	3010-DP
	Adjustable Floor Mount Bottom Pivot Set (Optional)	3010-G
	Adjustable Threshold Mount Bottom Pivot Set (Optional)	3010-GE

International® door closers inc

EAST:
1920 Air Lane Drive • Nashville, TN 37210
(615) 885-7060 • (800) 225-6737 • FAX: (615) 885-0903

WEST:
1140 North Kraemer Place • Anaheim, CA 92806
(714) 666-0390 • (800) 544-4422 • FAX: (714) 666-2215