International®

Adjustable Spring Power - Surface Mounted

HANDICAP

Series 8050

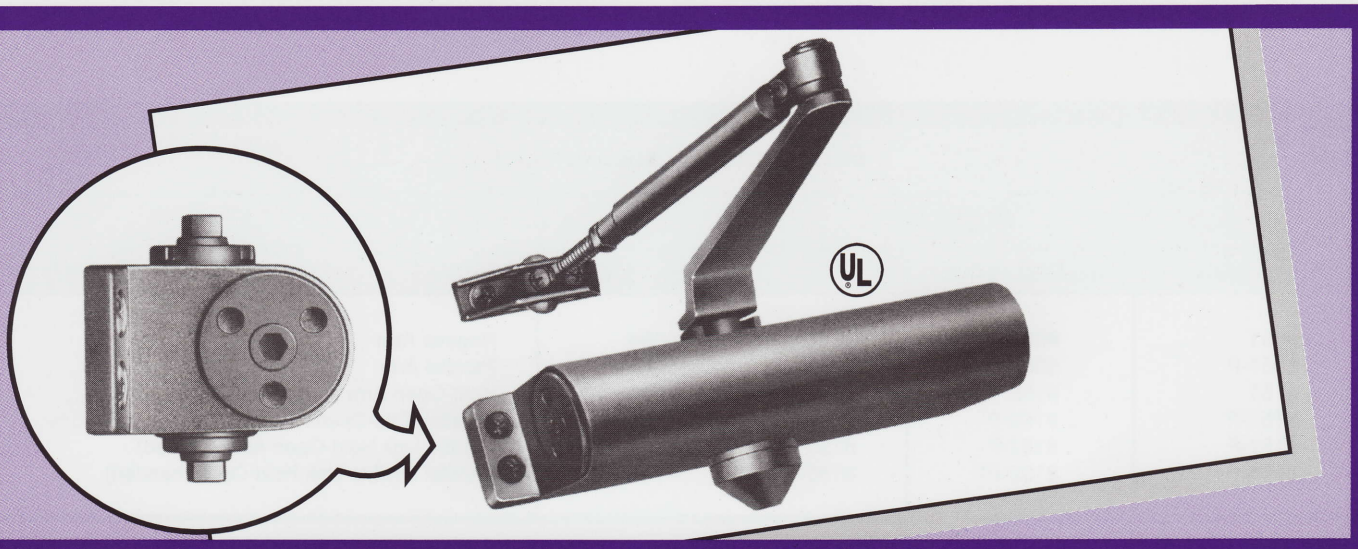

FEATURES

- Underwriters' Laboratories Inc. Listed.
- ADA (Handicap) multi-sized closers with adjustable spring power for a range of sizes adjustable after installation:

  8051 . . .8 1/2 lb. opening force to a size 5
  8052 . . . . 5 lb. opening force to a size 4
  8053 . . . . 5 lb. opening force to a size 4
  8054 . . .8 1/2 lb. opening force to a size 5

- **CLOSER FUNCTIONS:**
  8051; adjustable spring power with adjustable Back-Check controlled by a separate regulating valve,adjustable after installation.
  8052; adjustable spring power with adjustable Delayed Closing Action controlled by a separate regulating valve,adjustable after installation.
  8053 & 8054; Basic-adjustable spring power only.
- Two Speed Control Valves: Closing and Latching speeds controlled by separate regulating valves, adjustable after installation.
- Universal application. Non-handed for standard, top jamb or parallel arm installation.
- Rack and pinion mechanism contained in a high tensile precision cast aluminum housing.
- Stable hydraulic door check fluid for any climatic operation and constant lubrication.
- Furnished with regular, hold-open or fusible link hold-open arms.
- Hold-open arms are adjustable for holding from 90° to 180°
- Attractive "automotive type" finishes:
  AL - Aluminum
  BZ - Hardware Bronze (Gold)
  DU - Storefront Bronze

DESCRIPTION		
Length of Closer	A	9 3/4"
Horizontal Mounting Holes	B	9 1/16"
Vertical Mounting Holes	C	3/4"
Overall Height	D	4 21/32"
Top of Door to Bottom of Closer	E	2 1/16"
Height of Closer	F	1 21/32"
Projection from Door	G	2 29/32"

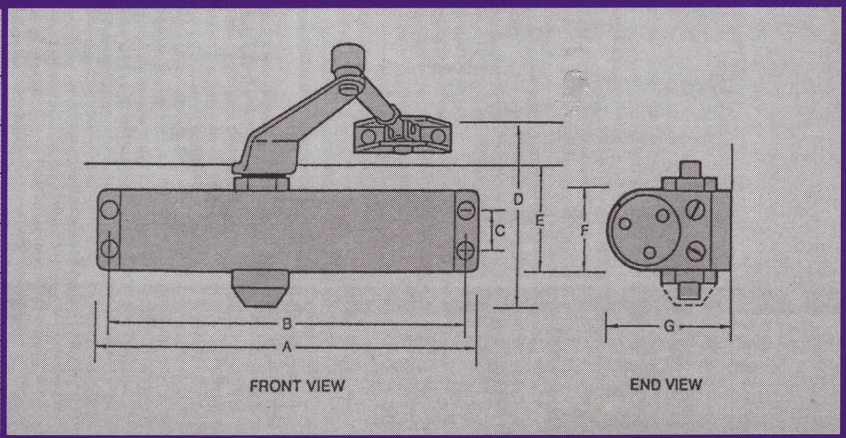

COPYRIGHT 1995 INTERNATIONAL DOOR CLOSERS, INC.

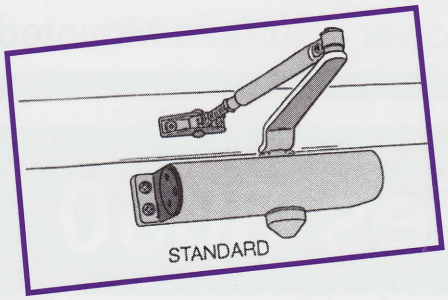

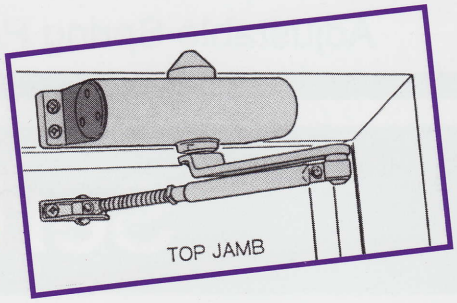

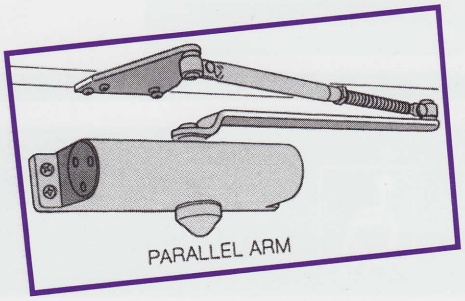

TYPICAL INSTALLATIONS (REGULAR ARMS SHOWN) Hold-Open Arms and Fusible Link Hold-Open Arms are similar

SCHEDULE OF MODELS AND TYPES

MODEL NO.				TYPE
BACK-CHECK	DELAYED ACTION	BASIC		
8051	8052	8053	8054	Regular Arm
8051-P	8052-P	8053-P	8054-P	Parallel Arm
8151	8152	8153	8154	Hold-Open Arm
8151-P	8152-P	8153-P	8154-P	Parallel Hold-Open Arm
8151-F	8152-F	8153-F	8154-F	Fusible Link Hold-Open Arm (handed)
8151-PF	8152-PF	8153-PF	8154-PF	Parallel Fusible Link Hold-Open (handed)

NOTE:
Doors of unusual height or weight, or doors subject to severe wind or draft conditions, or abusive usage require one or two more full turns of hex spring adjustment nut than shown on the installation instructions.

SPECIFY:
Closer Model or Part Number

SPECIFY FINISH:
AL - Aluminum
BZ - Hardware Bronze (Gold)
DU - Storefront Bronze

SPECIFY HAND:
"RH" or "LH"- for all Fusible Link Hold-Open Arms

WARRANTY:
Refer to inside front cover.

PARTS AND ACCESSORIES - SERIES 8050

DESCRIPTION			
Main Arm		Part #	520
Regular Forearm		Part #	521
Hold-Open Forearm		Part #	522
Fusible Link Hold-Open Forearm (handed)		Part #	523
Top Jamb Forearm Extender		Part #	514
Parallel Bracket for Regular Arm		Part #	525
Parallel Bracket - for Hold-Open or Fusible Link Hold-Open Arm		Part #	526
Flat Drop Bracket		Part #	547
Top Jamb Bracket		Part #	TJB-54
Dress Cover		Part #	DC-8000
Thru Bolt and Grommet Nut (Set of 4 each)		Part #	TBGN-50

International® door closers inc

EAST:
1920 Air Lane Drive • Nashville, TN 37210
(615) 885-7060 • (800) 225-6737 • FAX: (615) 885-0903

WEST:
1140 North Kraemer Place • Anaheim, CA 92806
(714) 666-0390 • (800) 544-4422 • FAX: (714) 666-2215