International®

Surface Mounted

STANDARD Series 650

ADJUSTABLE BACK-CHECK Series 680

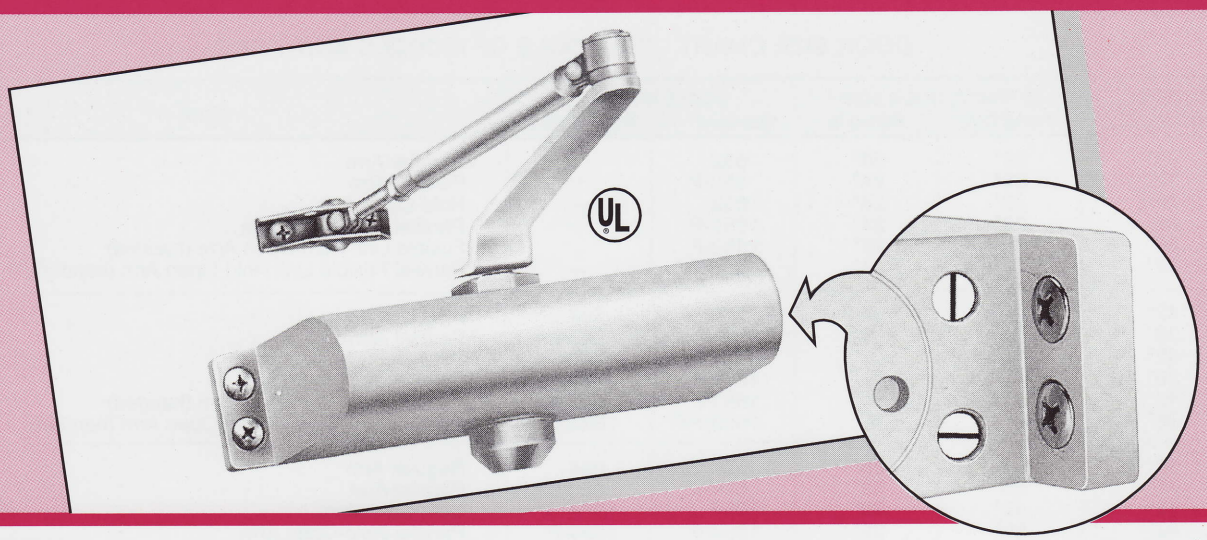

FEATURES

- Underwriters' Laboratories Inc. Listed.
- Range of sizes :
  Standard : 652, 653, 654 and 655
  Back-Check : 683, 684 and 685
- Two Adjustment Valves: Closing and Latching speeds controlled by separate regulating valves, adjustable after installation.
- Series 680 has adjustable Back-Check function controlled by a separate regulating valve, adjustable after installation.
- Universal application. Non-handed for standard, top jamb or parallel arm installation.
- Available with regular, hold-open or fusible link hold-open arms.
- Regular arms are equipped with a 15% (±7½%) power adjustment bracket.
- Hold-open arms are adjustable for holding from 90° to 180°.
- Rack and pinion mechanism contained in a high tensile precision cast aluminum housing assures the highest quality.
- Stable hydraulic door check fluid for any climatic operation and constant lubrication.
- Narrow design permits installation on most modern glass and aluminum doors without adaptors.
- Attractive "automotive type" finishes:
  AL - Aluminum
  BZ - Hardware Bronze (Gold)
  DU - Storefront Bronze

* Optional DC-8000 Dress Cover Available

DESCRIPTION		SIZE	
		2 & 3	4 & 5
Length of Closer Body	A	8 7/8"	9 13/16"
Horizontal Mounting Holes	B	8 3/16"	9 1/16"
Vertical Mounting Holes	C	3/4"	3/4"
Overall Height	D	4 21/32"	4 21/32"
Top of Door to Bottom of Closer Body	E	2 9/32"	2 9/32"
Height of Closer Body	F	1 25/32"	1 25/32"
Projection from Door	G	2 27/32"	2 27/32"

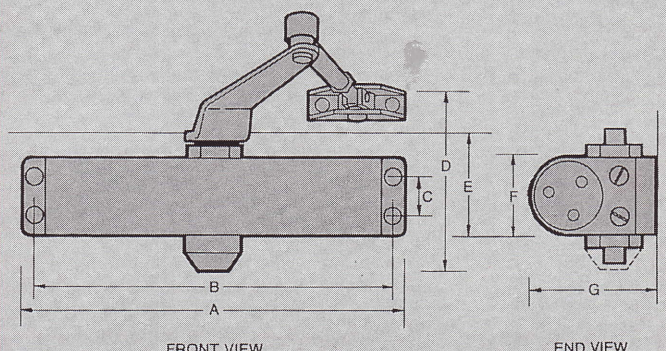

COPYRIGHT 1998 INTERNATIONAL DOOR CLOSERS, INC.

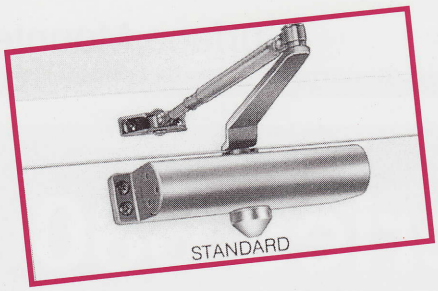

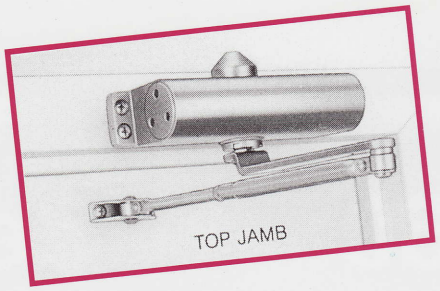

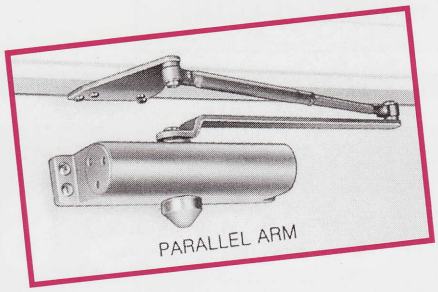

TYPICAL INSTALLATIONS (REGULAR ARMS SHOWN) Hold-Open Arms and Fusible Link Hold-Open Arms are similar

DOOR SIZE CHART - SCHEDULE OF MODELS AND TYPES

INTERIOR DOOR SIZE	EXTERIOR DOOR SIZE Swing Out	EXTERIOR DOOR SIZE Swing In	MODEL NUMBER Standard	MODEL NUMBER Back-Check	TYPE
36"	32"	28"	652	—	Regular Arm
32"	28"	24"	652-P	—	Parallel Arm
36"	32"	28"	1652	—	Hold-Open Arm
32"	28"	24"	1652-P	—	Parallel Hold-Open Arm
36"	32"	28"	1652-F	—	Fusible Link Hold-Open Arm (handed)
32"	28"	24"	1652-PF	—	Parallel Fusible Link Hold-Open Arm (handed)
42"	36"	32"	653	683	Regular Arm
36"	32"	28"	653-P	683-P	Parallel Arm
42"	36"	32"	1653	1683	Hold-Open Arm
36"	32"	28"	1653-P	1683-P	Parallel Hold-Open Arm
42"	36"	32"	1653-F	1683-F	Fusible Link Hold-Open Arm (handed)
36"	32"	28"	1653-PF	1683-PF	Parallel Fusible Link Hold-Open Arm (handed)
48"	42"	36"	654	684	Regular Arm
42"	36"	32"	654-P	684-P	Parallel Arm
48"	42"	36"	1654	1684	Hold-Open Arm
42"	36"	32"	1654-P	1684-P	Parallel Hold-Open Arm
48"	42"	36"	1654-F	1684-F	Fusible Link Hold-Open Arm (handed)
42"	36"	32"	1654-PF	1684-PF	Parallel Fusible Link Hold-Open Arm (handed)
54"	48"	42"	655	685	Regular Arm
48"	42"	36"	655-P	685-P	Parallel Arm
54"	48"	42"	1655	1685	Hold-Open Arm
48"	42"	36"	1655-P	1685-P	Parallel Hold-Open Arm
54"	48"	42"	1655-F	1685-F	Fusible Link Hold-Open Arm (handed)
48"	42"	36"	1655-PF	1685-PF	Parallel Fusible Link Hold-Open Arm (handed)

NOTE:
Doors of unusual height or weight, or doors subject to severe wind or draft conditions, or abusive usage, require the next larger model closer than the schedule.

SPECIFY:
Closer Model or Part Number

SPECIFY FINISH:
AL - Aluminum
BZ - Hardware Bronze (Gold)
DU - Storefront Bronze

SPECIFY HAND:
"RH" or "LH" - for all Fusible Link Hold-Open Arms

WARRANTY:
Refer to inside front cover.

PARTS AND ACCESSORIES - SERIES 650 AND 680

DESCRIPTION	SIZE	2 & 3	4 & 5
Main Arm	Part #	620	620
Regular Forearm	Part #	521	521
Hold-Open Forearm	Part #	522	522
Fusible Link Hold-Open Forearm (handed)	Part #	523	523
Top Jamb Forearm Extender	Part #	514	514
Parallel Bracket for Regular Arm	Part #	525	525
Parallel Bracket - for Hold-Open or Fusible Link Hold-Open Arm	Part #	526	526
Flat Drop Bracket	Part #	537	547
Top Jamb Bracket	Part #	TJB-53	TJB-54
Dress Cover	Part #	DC-8000	DC-8000
Thru Bolt and Grommet Nut (Set of 4 each)	Part #	TBGN-50	TBGN-50

International® door closers inc

EAST:
1920 Air Lane Drive • Nashville, TN 37210
(615) 885-7060 • (800) 225-6737 • FAX: (615) 885-0903

WEST:
1140 North Kraemer Place • Anaheim, CA 92806
(714) 666-0390 • (800) 544-4422 • FAX: (714) 666-2215