FB-1200 Flushbolt

- 15/16" x 4-1/4" Radius Face
- Positive "U" joint actuator with 5/8" throw
- 1/8", 3/16" and 1/4" offset with 7/8" backset
- Rod length for 12" Centerline of face installation
- Square Nylon Tip with beveled corners fits in 1/2" square hole
- Finishes Available:
  AL - Baked Satin Aluminum Paint
  BK - Baked Black Paint
  DU - Baked Storefront Bronze Paint

Ordering Information	
FB-1201	1/8" offset, without guide
FB-1202	1/8" offset, with guide
FB-1203	1/4" offset, without guide
FB-1204	1/4" offset, with guide
FB-1205	3/16" offset, without guide
FB-1206	3/16" offset, with guide

Specify : Model Number
Standard or Extended Hole Guide
Finish

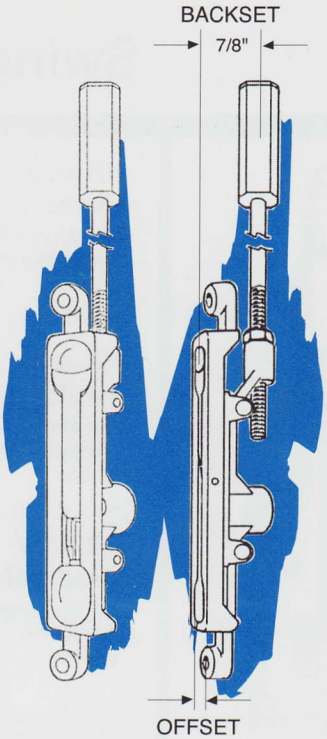

FB-2200 Flushbolt

- 15/16" x 4-1/4" Radius Face
- Positive "U" joint actuator with 7/8" throw
- 1/8" and 1/4" offset with 7/8" backset
- Rod length for 12" Centerline of face installation
- Square Nylon Tip with beveled corners fits in 1/2" square hole
- Finishes Available:
  AL - Baked Satin Aluminum Paint
  BK - Baked Black Paint
  DU - Baked Storefront Bronze Paint

Ordering Information	
FB-2201	1/8" offset, without guide
FB-2202	1/8" offset, with guide
FB-2203	1/4" offset, without guide
FB-2204	1/4" offset, with guide

Specify : Model Number
Standard or Extended Hole Guide
Finish

FB-1201-K Flushbolt

- 15/16" x 4-1/4" Radius Face
- Positive "U" joint actuator with 5/8" throw
- 1/8" offset with 11/16" backset
- Square Nylon Tip with beveled corners fits in 1/2" square hole
- Finishes Available:
  AL - Baked Satin Aluminum Paint
  BK - Baked Black Paint
  DU - Baked Storefront Bronze Paint

Specify : Finish

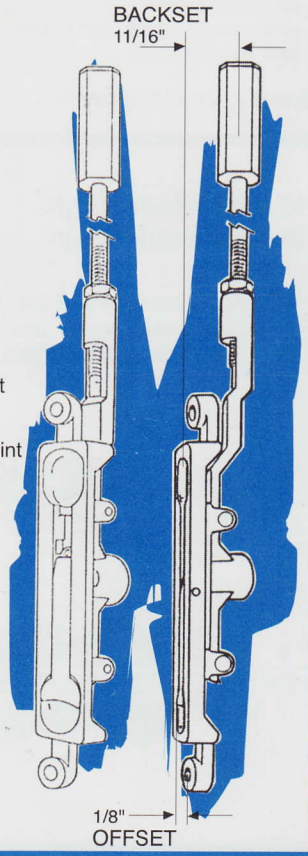

ER-1200 Flushbolt Extension Rod

- 1/4-20 x 12" Threaded rod
- Includes coupler

FG-1200 Standard Flushbolt Guide

- For use with FB-1200 and FB-2200 Flushbolts

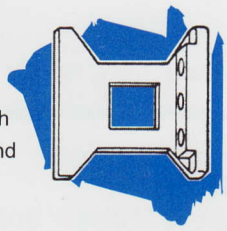

FG-1250 Extended Hole Flushbolt Guide

- For use with FB-1200 and FB-2200 Flushbolts

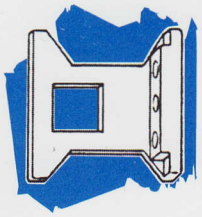

International® door closers inc

EAST:
1920 Air Lane Drive • Nashville, TN 37210
(615) 885-7060 • (800) 225-6737 • FAX: (615) 885-0903

WEST:
1140 North Kraemer Place • Anaheim, CA 92806
(714) 666-0390 • (800) 544-4422 • FAX: (714) 666-2215