Full Mortise Hinges

Plain Bearing • Standard Weight • Template

For use on Medium Weight Doors or Doors Requiring Low Frequency Service

700
Steel with steel pin ANSI A8133

800
Brass with stainless steel pin ANSI A2133
Stainless Steel with stainless steel pin ANSI A5133

LIFETIME TRI-CON WARRANTY

Three knuckle non-rising removable pin with concealed pin and plug. Identical in appearance to Tri-Con bearing hinges except "AB" does not appear on leaf under Hager trademark. Specify screw requirements.

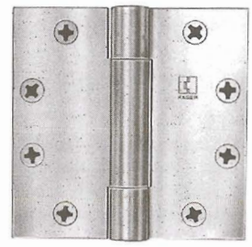

For Hospital type prefix "HT" to catalog number

Hinge Size		Gauge of metal	Number of holes	Screw Size		Quantity		Avg weight per case (lbs)	
Inches	Millimeters			Machine	Wood	Box	Case	Steel/SSteel	Brass
3½ x 3½	89 x 89	0.119	6	½ x 10-24	1 x 9	2 each	100 each	66	72
4 x 4	102 x 102	0.129	8	½ x 12-24	1¼ x 12	3 each	48 each	43	47
4½ x 4	114 x 102	0.134	8	½ x 12-24	1¼ x 12	3 each	48 each	55	60
4½ x 4½	114 x 114	0.134	8	½ x 12-24	1¼ x 12	3 each	48 each	55	60
5 x 4	127 x 102	0.145	8	½ x 12-24	1½ x 12	3 each	24 each	37	40
5 x 4½	127 x 114	0.145	8	½ x 12-24	1½ x 12	3 each	24 each	37	40
5 x 5	127 x 127	0.145	8	½ x 12-24	1½ x 12	3 each	24 each	37	40

Concealed Bearing • Standard Weight • Template

For use on Medium Weight Doors or Doors Requiring Medium Frequency Service

AB700
Steel with steel pin ANSI A8112

AB800
Brass with stainless steel pin ANSI A2112
Stainless Steel with stainless steel pin ANSI A5112

LIFETIME TRI-CON WARRANTY

Three knuckle with concealed hinge bearings, non-rising removable pin, concealed pin head and plug. Specify screw requirements.

AB800 is available in the new SecureCoat Lifetime Finish in Bright Brass! Specify US3SC when ordering.
Contact Hager Engineering for special applications.

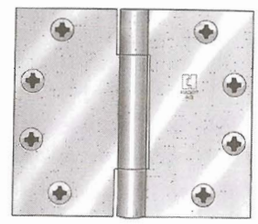

For Hospital type prefix "HT" to catalog number

Hinge Size		Gauge of metal	Number of holes	Screw Size		Quantity		Avg weight per case (lbs)	
Inches	Millimeters			Machine	Wood	Box	Case	Steel/SSteel	Brass
3½ x 3½	89 x 89	0.119	6	½ x 10-24	1 x 9	2 each	100 each	66	72
4 x 4	102 x 102	0.129	8	½ x 12-24	1¼ x 12	3 each	48 each	43	47
4½ x 4	114 x 102	0.134	8	½ x 12-24	1¼ x 12	3 each	48 each	55	60
4½ x 4½	114 x 114	0.134	8	½ x 12-24	1¼ x 12	3 each	48 each	55	60
5 x 4	127 x 102	0.145	8	½ x 12-24	1½ x 12	3 each	24 each	37	40
5 x 4½	127 x 114	0.145	8	½ x 12-24	1½ x 12	3 each	24 each	37	40
5 x 5	127 x 127	0.145	8	½ x 12-24	1½ x 12	3 each	24 each	37	40

Concealed Bearing • Standard Weight • Template • Wide Throw

For use on Medium Weight Doors or Doors Requiring Medium Frequency Service

AB700 – Wide Throw
Steel with steel pin ANSI A8112

AB800 – Wide Throw
Brass with stainless steel pin ANSI A2112
Stainless Steel with stainless steel pin ANSI A5112

LIFETIME TRI-CON WARRANTY

Three knuckle with concealed hinge bearings, non-rising removable pin, concealed pin head and plug. Specify screw requirements.

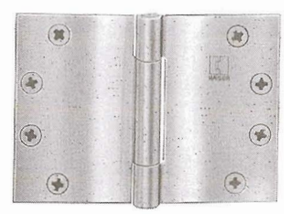

Hinge Size		Gauge of metal	Number of holes	Screw Size		Quantity		Avg weight per case (lbs)	
Inches	Millimeters			Machine	Wood	Box	Case	Steel/SSteel	Brass
4½ x 5	114 x 127	0.134	8	½ x 12-24	1¼ x 12	3 each	24 each	42	47
4½ x 6	114 x 152	0.134	8	½ x 12-24	1¼ x 12	3 each	24 each	42	47
4½ x 7	114 x 178	0.134	8	½ x 12-24	1¼ x 12	3 each	24 each	42	47
4½ x 8	114 x 203	0.134	8	½ x 12-24	1¼ x 12	3 each	24 each	42	47
5 x 6	127 x 152	0.145	8	½ x 12-24	1¼ x 12	3 each	12 each	27	29
5 x 7	127 x 178	0.145	8	½ x 12-24	1¼ x 12	3 each	12 each	27	29
5 x 8	127 x 203	0.145	8	½ x 12-24	1¼ x 12	3 each	12 each	27	29

Hinge testing conforms to ANSI A156.1. Furnished with screw hole locations that conform to standards approved by ANSI A156.7.

Full Mortise Hinges

Concealed Bearing • Heavy Weight • Template

For use on Heavy Weight Door or Doors Requiring High Frequency Service

AB750
Steel with steel pin ANSI A8111

AB850
Brass with stainless steel pin ANSI A2111
Stainless Steel with stainless steel pin ANSI A5111

LIFETIME TRI-CON WARRANTY

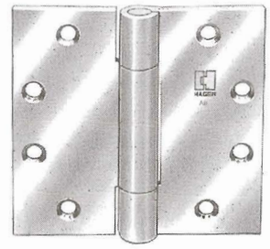

For Hospital type prefix "HT" to catalog number

Three knuckle with concealed hinge bearings. Non-rising removable pin, concealed pin head and plug. Specify screw requirements.

AB850 is available in the new SecureCoat Lifetime Finish in Bright Brass! Specify US3SC when ordering.
Contact Hager Engineering for special applications.

Hinge Size		Gauge of metal	Number of holes	Screw Size		Quantity		Avg weight per case (lbs)	
Inches	Millimeters			Machine	Wood	Box	Case	Steel	SSteel/Brass
4½ x 4½	114 x 114	0.180	8	½ x 12-24	1¼ x 12	3 each	24 each	38	35
5 x 4½	127 x 114	0.190	8	½ x 12-24	1¼ x 12	3 each	24 each	48	44
5 x 5	127 x 127	0.190	8	½ x 12-24	1¼ x 12	3 each	24 each	48	44
6 x 4½	152 x 114	.203 Steel & Brass .203 SS	10	½ x ¼-20	1½ x 14	3 each	24 each	70	61
6 x 5	152 x 127	.203 Steel & Brass .203 SS	10	½ x ¼-20	1½ x 14	3 each	24 each	70	61
6 x 6	152 x 152	.203 Steel & Brass .203 SS	10	½ x ¼-20	1½ x 14	3 each	24 each	70	61

Concealed Bearing • Heavy Weight • Template • Wide Throw

For use on Heavy Weight Door or Doors Requiring High Frequency Service

AB750 – Wide Throw
Steel with steel pin ANSI A8111

AB850 – Wide Throw
Brass with stainless steel pin ANSI A2111
Stainless Steel with stainless steel pin ANSI A5111

LIFETIME TRI-CON WARRANTY

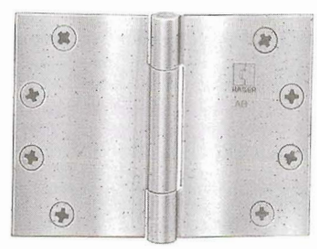

Three knuckle with concealed hinge bearings non-rising removable pin, concealed pin head and plug.
Specify screw requirements.

Hinge Size		Gauge of metal	Number of holes	Screw Size		Quantity		Avg weight per case (lbs)	
Inches	Millimeters			Machine	Wood	Box	Case	Steel	SSteel/Brass
4½ x 5	114 x 127	0.180	8	½ x 12-24	1¼ x 12	3 each	24 each	55	60
4½ x 6	114 x 152	0.180	8	½ x 12-24	1¼ x 12	3 each	24 each	55	60
4½ x 7	114 x 178	0.180	8	½ x 12-24	1¼ x 12	3 each	24 each	55	60
4½ x 8	114 x 203	0.180	8	½ x 12-24	1¼ x 12	3 each	24 each	55	60
5 x 6	127 x 152	0.190	8	½ x 12-24	1¼ x 12	3 each	12 each	32	35
5 x 7	127 x 178	0.190	8	½ x 12-24	1¼ x 12	3 each	12 each	32	35
5 x 8	127 x 203	0.190	8	½ x 12-24	1¼ x 12	3 each	12 each	32	35

Hinge testing conforms to ANSI A156.1. Furnished with screw hole locations that conform to standards approved by ANSI A156.7.

Full Mortise Hinges

Plain Bearing • Standard Weight • Template

For use on Medium Weight Doors Requiring Low Frequency Service (Not for use with Door Closer)

1279

Steel with steel pin ANSI A8133

1191

Brass with stainless steel pin ANSI A2133
Stainless Steel with stainless steel pin ANSI A5133

Five knuckle non-rising removable pin with button tip and plug.
Specify screw requirements.

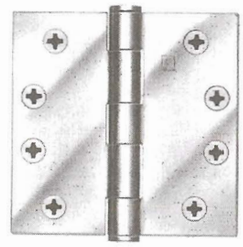

For Hospital type prefix "HT" to catalog number

Hinge Size		Gauge of metal	Number of holes	Screw Size		Quantity		Avg weight per case (lbs)	
Inches	Millimeters			Machine	Wood	Box	Case	Steel	SSteel/Brass
2 x 2	51 x 51	0.083	4	½ x8-32	¾ x 8	10 each	200 each	32	35
2½ x 2½	64 x 64	0.089	6	½ x8-32	¾ x 8	10 each	200 each	34	39
3 x 3	76 x 76	0.097	6	½ x10-24	1x 9	2 each	100 each	37	40
3½ x 3½	89 x 89	0.119	6	½ x10-24	1x 9	2 each	100 each	66	72
4 x 4	102 x 102	0.129	8	½ x12-24	1¼ x 12	3 each	48 each	43	47
4½ x 4	114 x 102	0.134	8	½ x12-24	1¼ x 12	3 each	48 each	49	53
4½ x 4½	114 x 114	0.134	8	½ x12-24	1¼ x 12	3 each	48 each	55	60
5 x 4	127 x 102	0.145	8	½ x12-24	1¼ x 12	3 each	24 each	37	40
5 x 4½	127 x 114	0.145	8	½ x12-24	1¼ x 12	3 each	24 each	37	40
5 x 5	127 x 127	0.145	8	½ x12-24	1¼ x 12	3 each	24 each	37	40
6 x 4½	152 x 114	0.160	10	½ x ¼ -20	1½ x 14	3 each	24 each	61	66
6 x 5	152 x 127	0.160	10	½ x ¼ -20	1½ x 14	3 each	24 each	61	66
6 x 6	152 x 152	0.160	10	½ x ¼ -20	1½ x 14	3 each	24 each	61	66

Ball Bearing • Standard Weight • Template

For use on Medium Weight Doors or Doors Requiring Medium Frequency Service

BB1279

Steel with steel pin ANSI A8112

BB1191

Brass with stainless steel pin ANSI A2112
Stainless Steel with stainless steel pin ANSI A5112

Five knuckle two ball bearings non-rising removable pin with button tip and plug.
Specify screw requirements.

BB1279 or BB1191

For Hospital type prefix "HT" to catalog number

CB1191

Stainless Steel with stainless steel pin ANSI A5112

Available in Hager's New SecureCoat Lifetime Finish in Bright Brass. *Specify US3SC when ordering. Contact Hager Engineering for special applications.*

Five knuckle concealed bearings non-rising removable pin with button tip and plug.
Specify screw requirements.

NEW PRODUCT!

CB1191 SecureCoat Lifetime Finish

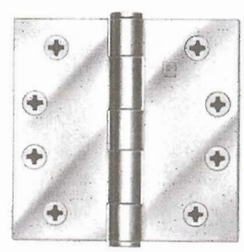

Hinge Size		Gauge of metal	Number of holes	Screw Size		Quantity		Avg weight per case (lbs)	
Inches	Millimeters			Machine	Wood	Box	Case	Steel	SSteel/Brass
3½ x 3½	89 x 89	0.119	6	½ x 10-24	1 x 9	2 each	100 each	66	72
4 x 4	102 x 102	0.129	8	½ x 12-24	1¼ x 12	3 each	48 each	43	47
4½ x 4	114 x 102	0.134	8	½ x 12-24	1¼ x 12	3 each	48 each	55	60
4½ x 4½	114 x 114	0.134	8	½ x 12-24	1¼ x 12	3 each	48 each	55	60
5 x 4	127 x 102	0.145	8	½ x 12-24	1¼ x 12	3 each	24 each	37	40
5 x 4½	127 x 114	0.145	8	½ x 12-24	1¼ x 12	3 each	24 each	37	40
5 x 5	127 x 127	0.145	8	½ x 12-24	1¼ x 12	3 each	24 each	37	40
6 x 4½	152 x 114	0.160	10	½ x 1/4-20	1½ x 14	3 each	24 each	57	62
6 x 5	152 x 127	0.160	10	½ x 1/4-20	1½ x 14	3 each	24 each	57	62
6 x 6	152 x 152	0.160	10	½ x 1/4-20	1½ x 14	3 each	24 each	57	62

Hinge testing conforms to ANSI A156.1. Furnished with screw hole locations that conform to standards approved by ANSI A156.7.

Full Mortise Hinges

HAGER COMPANIES

Plain Bearing • Standard Weight • Template • Wide Throw

For use on Medium Weight door or doors Requiring Low Frequency Service (Not for use with door closer)

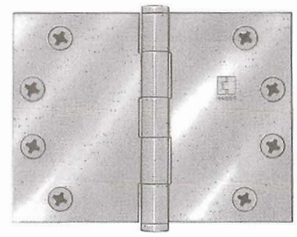

1279 – Wide Throw

Steel with steel pin ANSI A8133

1191 – Wide Throw

Brass with stainless steel pin ANSI A2133
Stainless Steel with stainless steel pin ANSI A5133

Five knuckle non-rising removable pin with button tip and plug.
Specify screw requirements.

Hinge Size		Gauge of metal	Number of holes	Screw Size		Quantity		Avg weight per case (lbs)	
Inches	Millimeters			Machine	Wood	Box	Case	Steel	SSteel/Brass
3½ x 5	89 x 127	0.119	6	½ x 10-24(9 hd)	1 x 9	3 each	24 each	24	26
3½ x 6	89 x 152	0.119	6	½ x 10-24(9 hd)	1 x 9	3 each	24 each	24	26
4 x 5	102 x 127	0.129	8	½ x 12-24	1¼ x 12	3 each	24 each	33	36
4 x 6	102 x 152	0.129	8	½ x 12-24	1¼ x 12	3 each	24 each	33	36
4 x 7	102 x 178	0.129	8	½ x 12-24	1¼ x 12	3 each	24 each	33	36
4½ x 5	114 x 127	0.134	8	½ x 12-24	1¼ x 12	3 each	24 each	42	47
4½ x 6	114 x 152	0.134	8	½ x 12-24	1¼ x 12	3 each	24 each	42	47
4½ x 7	114 x 178	0.134	8	½ x 12-24	1¼ x 12	3 each	24 each	42	47
4½ x 8	114 x 203	0.134	8	½ x 12-24	1¼ x 12	3 each	24 each	42	47
5 x 6	127 x 152	0.145	8	½ x 12-24	1¼ x 12	3 each	12 each	27	29
5 x 7	127 x 178	0.145	8	½ x 12-24	1¼ x 12	3 each	12 each	27	29
5 x 8	127 x 203	0.145	8	½ x 12-24	1¼ x 12	3 each	12 each	27	29

Ball Bearing • Standard Weight • Template • Wide Throw

For use on Medium Weight Doors or Doors Requiring Medium Frequency Service

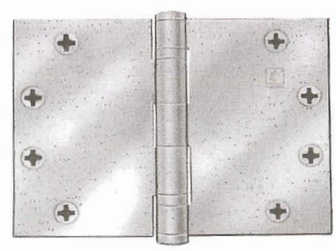

BB1279 – Wide Throw

Steel with steel pin ANSI A8112

BB1191 – Wide Throw

Brass with stainless steel pin ANSI A2112
Stainless Steel with stainless steel pin ANSI A5112

Five knuckle two ball bearings non-rising removable pin with button tip and plug.
Specify Screw Requirements

Hinge Size		Gauge of metal	Number of holes	Screw Size		Quantity		Avg weight per case (lbs)	
Inches	Millimeters			Machine	Wood	Box	Case	Steel	SSteel/Brass
3½ x 5	89 x 127	0.119	6	½ x 10-24	1 x 9	3 each	24 each	24	26
3½ x 6	89 x 152	0.119	6	½ x 10-24	1 x 9	3 each	24 each	24	26
4 x 5	102 x 127	0.129	8	½ x 12-24	1¼ x 12	3 each	24 each	33	36
4 x 6	102 x 152	0.129	8	½ x 12-24	1¼ x 12	3 each	24 each	33	36
4 x 7	102 x 178	0.129	8	½ x 12-24	1¼ x 12	3 each	24 each	33	36
4½ x 5	114 x 127	0.134	8	½ x 12-24	1¼ x 12	3 each	24 each	42	47
4½ x 6	114 x 152	0.134	8	½ x 12-24	1¼ x 12	3 each	24 each	42	47
4½ x 7	114 x 178	0.134	8	½ x 12-24	1¼ x 12	3 each	24 each	42	47
4½ x 8	114 x 203	0.134	8	½ x 12-24	1¼ x 12	3 each	24 each	42	47
5 x 6	127 x 152	0.145	8	½ x 12-24	1½ x 12	3 each	12 each	27	29
5 x 7	127 x 178	0.145	8	½ x 12-24	1½ x 12	3 each	12 each	27	29
5 x 8	127 x 203	0.145	8	½ x 12-24	1½ x 12	3 each	12 each	27	29

Hinge testing conforms to ANSI A156.1. Furnished with screw hole locations that conform to standards approved by ANSI A156.7.

PH. 1-800-325-9995 or 1-314-772-4400 • Fax 1-800-782-0149 or 1-314-772-0744

rev. 7/02

EVERYTHING HINGES ON HAGER!

Full Mortise Hinges

Ball Bearing • Heavy Weight • Template

For use on Heavy Weight Doors or Doors Requiring High Frequency Service

BB1168

Steel with steel pin ANSI A8111

BB1199

Brass with stainless steel pin ANSI A2111
Stainless Steel with stainless steel pin ANSI A5111

Five knuckle four ball bearings non-rising removable pin with button tip and plug.
Specify screw requirements.

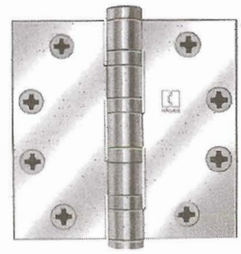

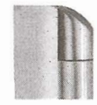

For Hospital type prefix "HT" to catalog number

Hinge Size		Gauge of metal	Number of holes	Screw Size		Quantity		Avg weight per case (lbs)	
Inches	Millimeters			Machine	Wood	Box	Case	Steel	SSteel/Brass
4½ x 4	114 x 102	0.180	8	½ x 12-24	1¼ x 12	3 each	24 each	35	38
4½ x 4½	114 x 114	0.180	8	½ x 12-24	1¼ x 12	3 each	24 each	35	38
5 x 4	127 x 102	0.190	8	½ x 12-24	1¼ x 12	3 each	24 each	44	48
5 x 4½	127 x 114	0.190	8	½ x 12-24	1¼ x 12	3 each	24 each	44	48
5 x 5	127 x 127	0.190	8	½ x 12-24	1¼ x 12	3 each	24 each	44	48
6 x 4½	152 x 114	.203 Steel & Brass .203 SS	10	½ x ¼-20	1½ x 14	3 each	24 each	70	65
6 x 5	152 x 127	.203 Steel & Brass .203 SS	10	½ x ¼-20	1½ x 14	3 each	24 each	70	65
6 x 6	152 x 152	.203 Steel & Brass .203 SS	10	½ x ¼-20	1½ x 14	3 each	24 each	70	65
8 x 6	203 x 152	.203 Steel & Brass .203 SS	16	½ x ¼-20	1½ x 14	3 each	12 each	67	62
8 x 8	203 x 203	.203 Steel & Brass .203 SS	16	½ x ¼-20	1½ x 14	3 each	12 each	67	62

Ball Bearing • Heavy Weight • Template • Wide Throw

For use on Heavy Weight door or doors Requiring High Frequency Service

BB1168 – Wide Throw

Steel with steel pin ANSI A5111

BB1199 – Wide Throw

Brass with brass pin ANSI A2111
Stainless Steel with stainless steel pin ANSI A5111

Five knuckle four ball bearings non-rising removable pin with tip and plug.
Specify Screw Requirements.

Hinge Size		Gauge of metal	Number of holes	Screw Size		Quantity		Avg weight per case (lbs)	
Inches	Millimeters			Machine	Wood	Box	Case	Steel	SSteel/Brass
4½ x 5	114 x 127	0.180	8	½ x 12-24	1¼ x 12	3 each	24 each	55	60
4½ x 6	114 x 152	0.180	8	½ x 12-24	1¼ x 12	3 each	24 each	55	60
4½ x 7	114 x 178	0.180	8	½ x 12-24	1¼ x 12	3 each	24 each	55	60
4½ x 8	114 x 203	0.180	8	½ x 12-24	1¼ x 12	3 each	24 each	55	60
5 x 6	127 x 152	0.190	8	½ x 12-24	1¼ x 12	3 each	12 each	32	35
5 x 7	127 x 178	0.190	8	½ x 12-24	1¼ x 12	3 each	12 each	32	35
5 x 8	127 x 203	0.190	8	½ x 12-24	1¼ x 12	3 each	12 each	32	35

Hinge testing conforms to ANSI A156.1. Furnished with screw hole locations that conform to standards approved by ANSI A156.7.

Full Mortise Hinges

Plain Bearing • Standard Weight • Template

For use on Medium Weight Doors or Doors Requiring Low to Medium Frequency Service

920

Steel with steel pin ANSI A8133

Two knuckle anti-friction bearing with square corner.
Specify Screw Requirements.

Right Hand Shown
Specify Handing Required

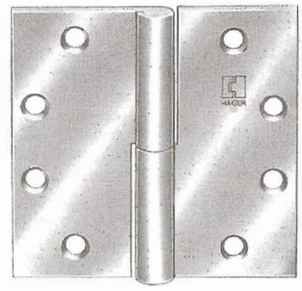

Hinge Size		Gauge of metal	Number of holes	Screw Size		Quantity		Avg weight per case (lbs)	
Inches	Millimeters			Machine	Wood	Box	Case	Steel	SSteel/Brass
4½ x 4	114 x 102	0.134	8	½ x 12-24	1¼ x 12	3 each	48 each	48	55
4½ x 4½	114 x 114	0.134	8	½ x 12-24	1¼ x 12	3 each	48 each	48	55

Anti-Friction Bearing • Standard Weight • Template

For use on Medium Weight Doors or Doors Requiring Low to Medium Frequency Service

AB920

Steel with stainless steel pin ANSI A8112

AB923

Brass with stainless steel pin ANSI A2112
Stainless Steel with stainless steel pin ANSI A5112

Two knuckle anti-friction bearing with square corner.
Specify Screw Requirements.

Right Hand Shown
Specify Handing Required

Hinge Size		Gauge of metal	Number of holes	Screw Size		Quantity		Avg weight per case (lbs)	
Inches	Millimeters			Machine	Wood	Box	Case	Steel	SSteel/Brass
4½ x 4	114 x 102	0.134	8	½ x 12-24	1¼ x 12	3 each	48 each	48	55
4½ x 4½	114 x 114	0.134	8	½ x 12-24	1¼ x 12	3 each	48 each	48	55

Anti-Friction Bearing • Heavy Weight • Template

For use on Heavy Weight Doors or Doors Requiring High Frequency Service

AB930

Steel with stainless steel pin ANSI A8111

AB933

Brass with stainless steel pin ANSI A2111
Stainless Steel with stainless steel pin ANSI A5111

Two knuckle anti-friction bearing with square corner.
Specify Screw Requirements.

Right Hand Shown
Specify Handing Required

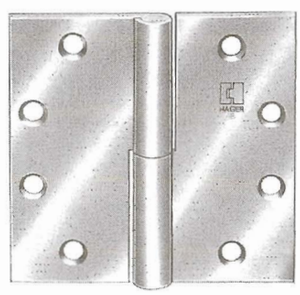

Hinge Size		Gauge of metal	Number of holes	Screw Size		Quantity		Avg weight per case (lbs)	
Inches	Millimeters			Machine	Wood	Box	Case	Steel	SSteel/Brass
4½ x 4	114 x 102	0.180	8	½ x 12-24	1¼ x 12	3 each	24 each	41	48
4½ x 4½	114 x 114	0.180	8	½ x 12-24	1¼ x 12	3 each	24 each	41	48

Hinge testing conforms to ANSI A156.1. Furnished with screw hole locations that conform to standards approved by ANSI A156.7.

PH. 1-800-325-9995 or 1-314-772-4400 • Fax 1-800-782-0149 or 1-314-772-0744

rev. 7/02

EVERYTHING HINGES ON HAGER!

Full Mortise Hinges

Three Knuckle Exposed Electric Hinges

Electric Contact Hinge – E2

Available on architectural grade full mortise hinges in the following sizes:
4" x 4" (102 x 102 mm) Hinges are available with 2 or 3 contacts
4 1/2" x 4 1/2" (114 x 114 mm) and 5" x 5" (127 x 127 mm) Hinges are available with 2, 3, or 4 contacts

- Design includes insulated copper contacts
- Two contacts minimum required to transfer electrical current
- Specify suffix "E" and Number of Contacts desired
  Example: AB800 4½ x 4½ x US26D x E2 (two contacts) x NRP
- All Electric Contact Hinges are furnished with non-removable pins.

Contact		
Amperes	3.5 Amps	CONTINUOUS
	16.0 Amps	PULSE

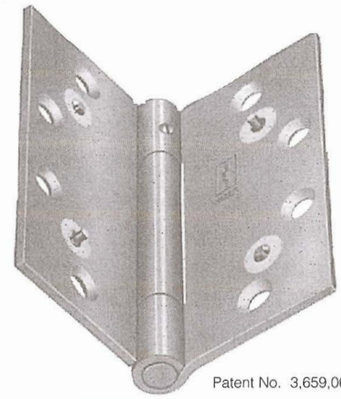

Patent No. 3,659,063

Electric Switch Hinge – E1S

Available on architectural grade full mortise hinges in the following sizes:
4" x 4" (102 x 102 mm), 41/2" x 41/2" (114 x 114 mm), and 5" x 5" (127 x 127 mm).

- Single pole, double throw switch
- Specify using suffix "E1S"
  Example: AB800 4½ x 4½ x US26D x E1S x NRP
- All Electric Switch Hinges are furnished with non-removable pins.

Maximum Electrical Rating	
Volts	48 VDC/AC
Amperes	500 mA
Watts	15
Volt Amperes	16

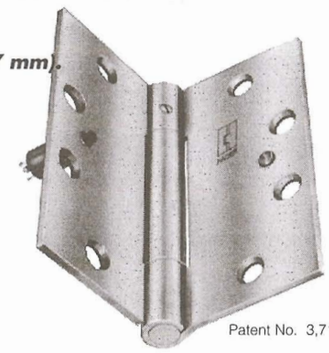

Patent No. 3,715,537

Electric Contact/Switch Hinge – E2/E1S

Available on architectural grade full mortise hinges in the following sizes:
4" x 4" (102 x 102 mm), 41/2" x 41/2" (114 x 114 mm), and 5" x 5" (127 x 127 mm).

- A combination of two Electric Contacts and One Switch
- Design includes insulated copper contacts.
- Single pole, double throw switch
- Specify using suffix "E2/E1S"
  Example: AB800 4½ x 4½ x US26D x E2 (two contacts)/E1S x NRP
- All Electric Contact/Switch Hinges are furnished with non-removable pins.

Contact		
Amperes	3.5 Amps	CONTINUOUS
	16.0 Amps	PULSE

Maximum Electrical Rating	
Volts	48 VDC/AC
Amperes	500 mA
Watts	15
Volt Amperes	16

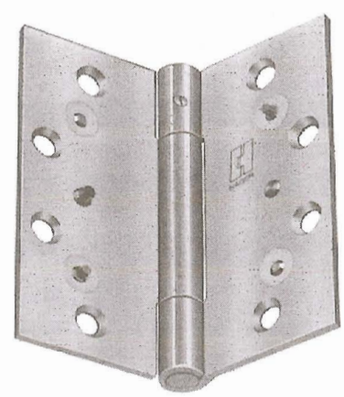

All electric hinges are packed one hinge per box with all MS and 1/2 WS screws, unless otherwise ordered.

Full Mortise Hinges

Five Knuckle Exposed Electric Hinges

Electric Contact Hinge – E2

Available on architectural grade full mortise hinges in the following sizes:

4" x 4" (102 x 102 mm) Hinges are available with 2 or 3 contacts

4 1/2" x 4 1/2" (114 x 114 mm) and 5" x 5" (127 x 127 mm) Hinges are available with 2, 3, or 4 contacts

- Design includes insulated copper contacts
- Two contacts minimum required to transfer electrical current
- Specify suffix "E" and Number of Contacts desired
  Example: BB1191 4½ x 4½ x US26D x E2 (two contacts) x NRP
- All Electric Contact Hinges are furnished with non-removable pins.

	Contact	
Amperes	3.5 Amps	CONTINUOUS
	16.0 Amps	PULSE

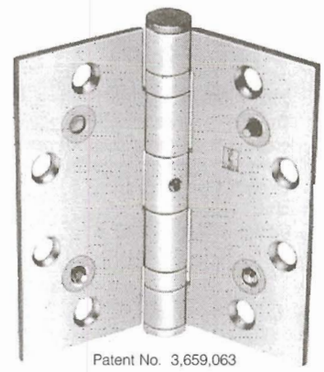

Patent No. 3,659,063

Electric Switch Hinge – E1S

Available on architectural grade full mortise hinges in the following sizes:

4" x 4" (102 x 102 mm), 41/2" x 41/2" (114 x 114 mm), and 5" x 5" (127 x 127 mm).

- Single pole, double throw switch
- Specify using suffix "E1S"
  Example: BB1279 4½ x 4½ x US26D x E1S x NRP
- All Electric Switch Hinges are furnished with non-removable pins.

Maximum Electrical Rating	
Volts	48 VDC/AC
Amperes	500 mA
Watts	15
Volt Amperes	16

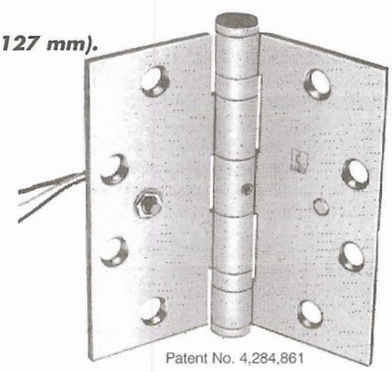

Patent No. 4,284,861

Electric Contact/Switch Hinge – E2/E1S

Available on architectural grade full mortise hinges in the following sizes:

4" x 4" (102 x 102 mm), 41/2" x 41/2" (114 x 114 mm), and 5" x 5" (127 x 127 mm).

- A combination of two Electric Contacts and One Switch
- Design includes insulated copper contacts.
- Single pole, double throw switch
- Specify using suffix "E2/E1S"
  Example: BB1191 4½ x 4½ x US26D x E2 (two contacts)/E1S x NRP
- All Electric Contact/Switch Hinges are furnished with non-removable pins.

	Contact	
Amperes	3.5 Amps	CONTINUOUS
	16.0 Amps	PULSE

Maximum Electrical Rating	
Volts	48 VDC/AC
Amperes	500 mA
Watts	15
Volt Amperes	16

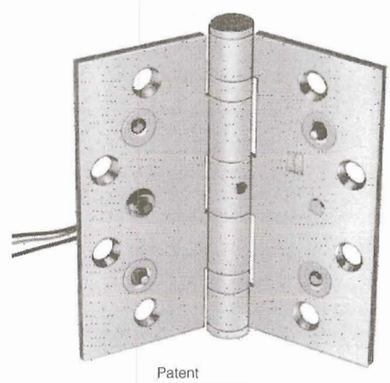

Patent No.3,838,234

All electric hinges are packed one hinge per box with all MS and 1/2 WS screws, unless otherwise ordered.

PH. 1-800-325-9995 or 1-314-772-4400 • Fax 1-800-782-0149 or 1-314-772-0744

rev. 7/02

EVERYTHING HINGES ON HAGER!

Full Mortise Hinges

Three Knuckle Concealed Electric Hinges

Available on 4" x 4" (102 x 102 mm), 4 1/2" x 4 1/2" (114 x 114 mm), and 5" x 5" (127 x 127 mm) architectural grade full mortise hinges.

Type: AB700, AB800 Standard Weight
AB750, AB850 Heavy Weight

Available in Steel, Brass, and Stainless Steel

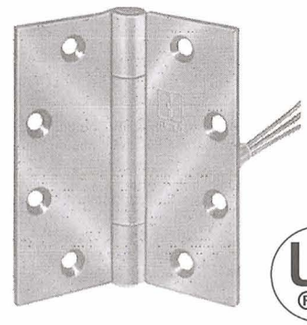

Electric Monitor Only – EMN

- Other Sizes Available Upon Request.
- Specify using suffix "EMN"
  Example: AB800 5 x 4½ x US26D x EMN
- Hinge pins are **not** field removable. **NRP variation is therefore not neccesary nor available.**

Electric Monitor Only — EMN

For doors which require a monitoring capability only. The EMN is a monitoring hinge with a concealed subminiature, snap action, SPDT switch.

The exclusive adjustment feature provides a wide range of switch sensitivity. The switching circuit is preset at the factory to operate when the inside edge of the hinge leaves are opened between 3/16 to 3/8 inches (5 to 10 mm). 28 gauge wire is used.

Maximum Electrical Rating	
Volts	48 VDC/AC
Amperes	1 Amp
Watts	15
Volt Amperes	16

Means for adjustment is provided on the frame leaf of the hinge for those installations which require an adjustment of switch sensitivity. Total control of the monitoring sensitivity may be achieved by removing the screws from the frame leaf only, then inserting the adjusting tool for fine tuning of the snap-action switch. See installation instructions for further directions.

Electric Through-Wire Only – ETW

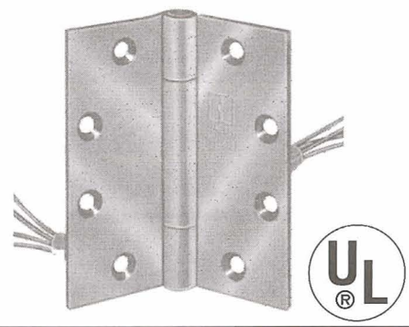

- Other Sizes Available Upon Request.
- Specify using suffix "ETW"
  Example: AB700 5 x 4½ x US10A x ETW
- Hinge pins are **not** field removable. **NRP variation is therefore not neccesary nor available.**

Electric Through-Wire Only — ETW

For doors which require low voltage electric current transfer capability only.

The ETW is a through-wire hinge which provides 4, 6, 8, 10 or 12 continuous electric conductors for transfer of current from frame to door. 28 gauge wire is used.

Maximum Electrical Rating		
Amperes	3.5 Amps	CONTINUOUS
	16.0 Amps	PULSE

Electric Through-Wire with Monitoring – ETM

- Other Sizes Available Upon Request.
- Specify using suffix "ETM"
  Example: AB750 5 x 4½ x US10A x ETM
- Hinge pins are **not** field removable. **NRP variation is therefore not neccesary nor available.**

Electric Through-Wire with Monitoring — ETM

For doors requiring both continuous electric conductors and monitoring capability.

The ETM is a combination of the Hager Through-Wire and Monitoring hinges. This hinge offers the concealed monitoring switch and (4, 6, 8 or 10 wire) continuous electrical conductors. 28 gauge wire is used. The adjustment features, as stated in the Electric Monitor hinge, are also applicable in this hinge.

The EMN and ETM switch may be wired for Open Loop Secure, Closed Loop Secure of Single Pole Double Throw (SPDT). The Open Loop Secure hinges are wired so that when the door is secure (closed) the switch is open (does not pass current). When the door opens a closed contact is detected as an alarm. Closed Loop Secure hinges are wired so that when the door is secure (closed) the switch is closed (passes current). When the door opens, an open contact is detected as an alarm. When Single Pole Double Throw (SPDT) wiring is used both switching arrangements are utilized. Templates available upon request.

Maximum Electrical Rating		
Amperes	3.5 Amps	CONTINUOUS
	16.0 Amps	PULSE

Maximum Electrical Rating	
Volts	48 VDC/AC
Amperes	1 Amp
Watts	15
Volt Amperes	16

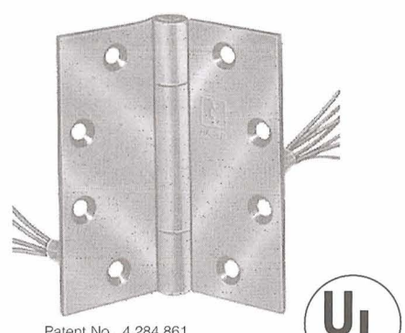

Patent No. 4,284,861

NOTES:
1. All electric hinge modifications are to be placed in the **center** hinge position. Any other location will void warranty.
2. For grout filled frames, install Hager #430 mortar box. Failure to install mortar box in grout filled frames will void warranty.

All electric hinges are packed one hinge per box with all MS and 1/2 WS screws, unless otherwise ordered.

Full Mortise Hinges

Five Knuckle Concealed Electric Hinges

Available on 4" x 4" (102 x 102 mm), 4 1/2" x 4 1/2" (114 x 114 mm), and 5" x 5" (127 x 127 mm) architectural grade full mortise hinges.
Type: BB1279, BB1191 Standard Weight
BB1168, BB1199 Heavy Weight
Available in Steel, Brass, and Stainless Steel

Electric Monitor Only – EMN

- Other Sizes Available Upon Request
- Specify using suffix "EMN"
  Example: BB1199 5 x 4½ x US26D x EMN
- Hinge pins are **not** field removable. **NRP variation is therefore not neccesary nor available.**

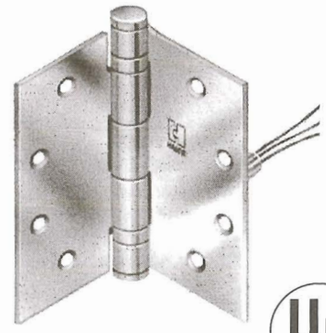

Electric Monitor Only — EMN

For doors which require a monitoring capability only. The EMN is a monitoring hinge with a concealed, subminiature, snap action, SPDT switch.

The exclusive adjustment feature provides a wide range of switch sensitivity. The switching circuit is preset at the factory to operate when the inside edge of the hinge leaves are opened between 3/16 to 3/8 inches (5 to 10 mm). 28 gauge wire is used.

Maximum Electrical Rating	
Volts	48 VDC/AC
Amperes	1 Amp
Watts	15
Volt Amperes	16

Means for adjustment is provided on the frame leaf of the hinge for those installations which require an adjustment of switch sensitivity. Total control of the monitoring sensitivity may be achieved by removing the screws from the frame leaf only, then inserting the adjusting tool for fine tuning of the snap-action switch. See installation instructions for further directions.

Electric Through-Wire Only – ETW

- Other Sizes Available Upon Request
- Specify using suffix "ETW"
  Example: BB1279 5 x 4½ x US10A x ETW
- Hinge pins are **not** field removable. **NRP variation is therefore not neccesary nor available.**

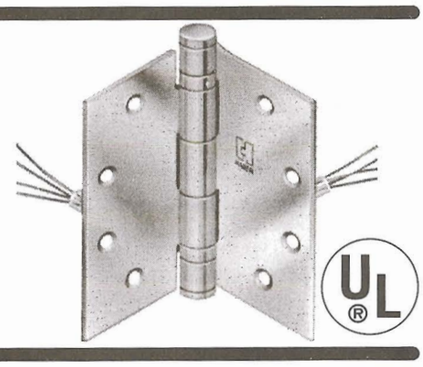

Electric Through-Wire Only — ETW

For doors which require low voltage electric current transfer capability only.

The ETW is a through-wire hinge which provides 4, 6, 8, 10 or 12 continuous electric conductors for transfer of current or signals from frame to door. 28 gauge wire is used.

Maximum Electrical Rating		
Amperes	3.5 Amps	CONTINUOUS
	16.0 Amps	PULSE

Electric Through-Wire with Monitoring – ETM

- Other Sizes Available Upon Request
- Specify using suffix "ETM"
  Example: BB1168 5 x 4½ x US10A x ETM
- Hinge pins are **not** field removable. **NRP variation is therefore not neccesary nor available.**

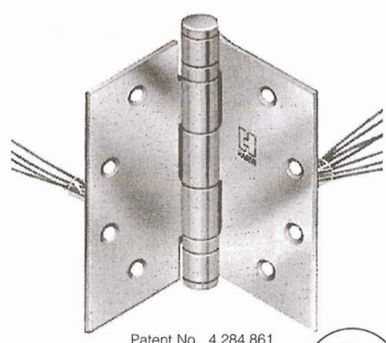

Patent No. 4,284,861

Electric Through-Wire with Monitoring — ETM

For doors requiring both continuous electric conductors and monitoring capability.

The ETM is a combination of the Hager Through-Wire and Monitoring hinges. This hinge offers the concealed monitoring switch and (4, 6, 8 or10 wire) continuous electrical conductors. 28 gauge wire is used. The adjustment features, as stated in the Electric Monitor hinge, are also applicable in this hinge.

Maximum Electrical Rating		
Amperes	3.5 Amps	CONTINUOUS
	16.0 Amps	PULSE

Maximum Electrical Rating	
Volts	48 VDC/AC
Amperes	1 Amp
Watts	15
Volt Amperes	16

The EMN and ETM switch may be wired for Open Loop Secure, Closed Loop Secure of Single Pole Double Throw (SPDT). The Open Loop Secure hinges are wired so that when the door is secure (closed) the switch is open (does not pass current). When the door opens a closed contact is detected as an alarm. Closed Loop Secure hinges are wired so that when the door is secure (closed) the switch is closed (passes current). When the door opens, an open contact is detected as an alarm. When Single Pole Double Throw (SPDT) wiring is used both switching arrangements are utilized.

Templates available upon request.

All electric hinges are packed one hinge per box with all MS and 1/2 WS screws, unless otherwise ordered.

NOTES:
1. All electric hinge modifications are to be placed in the **center** hinge position. Any other location will void warranty.
2. For grout filled frames, install Hager #430 mortar box. Failure to install mortar box in grout filled frames will void warranty.

PH. 1-800-325-9995 or 1-314-772-4400 • Fax 1-800-782-0149 or 1-314-772-0744

rev. 7/02

EVERYTHING HINGES ON HAGER!

Full Mortise Hinges

Full Mortise Concealed Air Transfer Hinge

Architectural Grade – Standard Weight

AB700
Steel

AB800
Brass, Stainless Steel

BB1191
Brass, Stainless Steel

BB1279
Steel

Architectural Grade – Heavy Weight

AB750
Steel

AB850
Brass, Stainless Steel

BB1168
Steel

BB1199
Brass, Stainless Steel

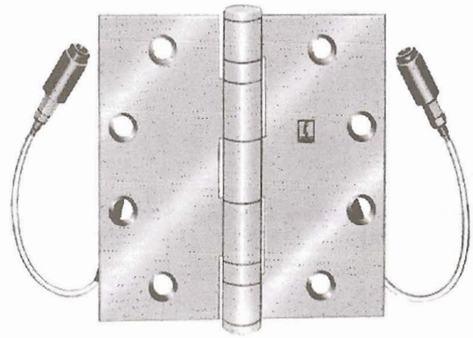

Pat. No. 4,010,572

Hinge pins are **not** field removable. **NRP and SH variations are therefore not neccesary nor available.**
All air hinges are packed one hinge per box with all MS & 1/2 WS screws, unless otherwise ordered.

AIR TRANSFER HINGE

- Available in 4 1/2 x 4 (114 x 102 mm), 4 1/2 x 4 1/2 (102 x 102 mm), 5 x 4 (127 x 127 mm), 5 x 4 1/2 (127 x 102 mm), 5 x 5 (127 x 127 mm). Other sizes available upon request.
- ATH for doors which require the transfer of compressed air.
- This hinge uses 5/32" (4mm) plastic air tubing, has quick-connect fittings and is capable of transferring 80-100 PSI through the air tubing.
- Steel or Stanless Steel hinges are acceptable for use on labeled or fire rated doors.

Mortar Box

For Electric or Air Transfer Hinges

430
Galvanized

For use with Hager electric or air hinges.

MORTAR BOX

Compares to:
- *McKinney - MG16*
- *Stanley - JB1*

FILE #428R

- OVERALL DIMENSION: 9" (229 mm) Length W/Tabs, 7" (178 mm) Inside, 1 3/4" X 1 3/4" (45 x 45 mm) Inside Dimension.
- Removable back for servicing.
- Serves as mortar shield.
- Knockouts top and bottom for standard conduit fittings.
- Fits hinges reinforcements for 4 1/2" (114 mm) or 5" (127 mm) architectural grade hinges.
- Galvanized steel .040".
- Can be installed by hollow metal manufacturers or installed on the job before frame is set.

NOTE: For use with Hager hinges. All electric or air hinges are to be placed in the center hinge position. Any other location will void warranty.

Hinge testing conforms to ANSI A156.1. Furnished with screw hole locations that conform to standards approved by ANSI A156.7.

Full Mortise Hinges

Spring Hinge • Full Mortise • Template • Single Acting

For automatic closing of door. Meets codes for hotels, motels, institutions and commercial buildings

1150 – Square Corner
Stainless Steel with stainless steel components ANSI K51071F

Sizes: 4 1/2 x 4 (114 x 102 mm), 4 1/2 x 4 1/2 (114 x 114 mm)

1250 – Square Corner
Steel ANSI K81071F

Sizes: 3 1/2 x 3 1/2 (89 x 89 mm), 4 x 4 (102 x 102 mm), 4 1/2 x 4 (114 x 102 mm), 4 1/2 x 4 1/2 (114 x 114 mm)

1251 – 1/4" Radius
Steel ANSI K81071F

Sizes: 3 1/2 x 3 1/2 (89 x 89 mm), 4 x 4 (102 x 102 mm), 4 1/2 x 4 (114 x 102 mm), 4 1/2 x 4 1/2 (114 x 114 mm)

1252 – 5/8" Radius
Steel ANSI K81071F

Sizes: 3 1/2 x 3 1/2 (89 x 89 mm), 4 x 4 (102 x 102 mm, 4 1/2 x 4 (114 x 102 mm), 4 1/2 x 4 1/2 (114 x 114 mm))

1255 – Square Corner Spring Hinge Set
ANSI K81071F

Sizes: 4 1/2 x 4 1/2 (114 x 114 mm). Two each 1250 and one each AB700.

1256 – Square Corner Spring Hinge Set
ANSI K81071F

Sizes: 4 1/2 x 4 1/2 (114 x 114 mm). Two each 1250 and one each BB1279.

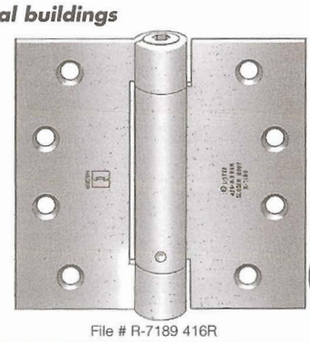

File # R-7189 416R

Series	Size	Recommended Max Door Weight (Lbs.)	Spring Hinge	Ball Bearing Hinge
For Use on 1 3/8" (35 mm) Door				
1250	3 1/2 x 3 1/2	40	1	2
1251		70	2	1
1252		90	3	—
For Use on 1 3/4" (45 mm) Door				
1250	4 x 4	60	1	2
1251		85	2	1
1252		110	3	—
1150	4 1/2 x 4 4 1/2 x 4 1/2	70	1	2
		115	2	1
		150	3	—
1250	4 1/2 x 4 4 1/2 x 4 1/2	70	1	2
		115	2	1
		150	3	—
1256	4 1/2 x 4 1/2	115	2	1

Maximum Door Size

For labeled doors 3' x 7' the maximum door size is based on the limits set forth by NFPA Standard #80. Labeled Doors require Ball Bearing hinges.

For non-labeled doors 4'0" wide, 4" x 4" Spring hinges are not recommended. For non-labeled doors over 7'6" in height, use an additional hinge for each additional 30" of height or fraction thereof.

NOTES:

1. For maximum versatility use all spring hinges or a combination of spring hinges and ball bearing hinges. Do not use plain bearing hinges.
2. Full spring tension may not be required on all hinges.
3. Strong wind conditions, drafts, carpeting drag, twisted/misaligned frames, or weatherstripping on doors may require additional spring hinges.

Hinge Size		Gauge of metal	Number of holes	Screw Size		Quantity		Avg weight per case (lbs)
Inches	Millimeters			Machine	Wood	Box	Case	Steel/Stainless Steel
3½ x 3½	89 x 89	0.134	6	½ x 10-24	1 x 9	2 each	40 each	27
4 x 4	102 x 102	0.134	8	½ x 12-24	1 x 9	3 each	40 each	33
4½ x 4	114 x 102	0.134	8	½ x 12-24	1¼ x 12	3 each	40 each	47
4½ x 4½	114 x 114	0.134	8	½ x 12-24	1¼ x 12	3 each	40 each	47

Standard screw packaging on sizes 4 1/2 x 4 and 4 1/2 x 4 1/2 is all machine and 1/2 wood.
Machine screws for 3 1/2 x 3 1/2 and 4 x 4 hinges packed upon request. Specify size.

GENERAL INSTALLATION INSTRUCTIONS:

All steps must be followed to insure that the Hager Spring Hinge will function as designed.

1. Install spring hinge to door and frame at either top and bottom or center and bottom hinge locations. Then, install ball bearing in conjunction with 1250 Series. Check for proper door clearance. There should be at least 1/4" (6 mm) clearance at the bottom of the door for vacuum relief.
2. Open the door by hand to 90° angle, and push it closed. If the door latches, the hinges are ready to receive tension. If there is any resistance and the door does not latch, this indicates that the door is either out of balance or misaligned. This condition will have to be corrected before tension can be applied to the spring hinges.
3. Door weight should not exceed the recommended requirements. This includes all hardware and veneer.

SPRING HINGE ADJUSTMENT INSTRUCTIONS:

1. Install spring hinge in normal manner with the adjustment end up. Place door in closed position.
2. Insert Hex wrench in adjusting location. (Figure #1)
4. Rotate Hex wrench clockwise and insert locking pin loosely in adjusting hole. (Figure #2)
5. Release Hex wrench until locking pin contacts side of adjusting hole.
6. Remove Hex wrench and check the door closing force. If closing force is not satisfactory, repeat steps 2 thru 6.

CAUTION #1: Use proper safety protection while installing the Hager Spring Hinge.

CAUTION #2: Door should be in a closed position.

CAUTION #3: Do not adjust tension past two (2) holes when a 180° opening is required.
Do not adjust tension past three (3) when a 90° opening is required.

CAUTION #4: Always rotate the Hex Wrench in a clockwise direction, regardless of right or left hand application.

CAUTION #5: On 3 1/2 x 3 1/2 – 1250 Series — Maintain Mortise Depth at .119" (3 mm).

Conforms to standards approved by ANSI A156.17.

Figure 1

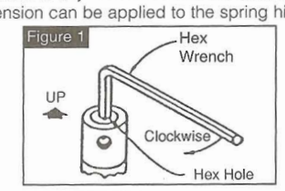

Figure 2

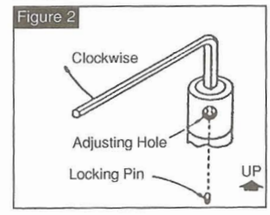

PH. 1-800-325-9995 or 1-314-772-4400 • Fax 1-800-782-0149 or 1-314-772-0744

rev. 7/02

EVERYTHING HINGES ON HAGER!

Full Mortise Hinges

Reverse Action Spring Hinge • Full Mortise • Template • Single Acting

For automatic opening of door. Meets codes for hotels, motels, institutions and commercial buildings

1257 – Square Corner

Steel ANSI K81071F

Sizes: 3½ x 3½ (89 x 89 mm), 4 x 4 (102 x 102 mm), 4½ x 4 (114 x 102 mm), 4½ x 4½ (114 x 114 mm)

1258 – ¼" Radius

Steel ANSI K81071F

Sizes: 3½ x 3½ (89 x 89 mm), 4 x 4 (102 x 102 mm), 4½ x 4 (114 x 102 mm), 4½ x 4½ (114 x 114 mm)

1259 – ⅝" Radius

Steel ANSI K81071F

Sizes: 3½ x 3½ (89 x 89 mm), 4 x 4 (102 x 102 mm), 4½ x 4 (114 x 102 mm), 4½ x 4½ (114 x 114 mm)

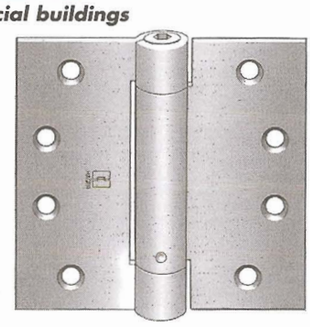

NOTES:

1. For maximum versatility use all spring hinges or a combination of spring hinges and ball bearing hinges. Do not use plain bearing hinges.
2. Full spring tension may not be required on all hinges.
3. Strong wind conditions, drafts, carpeting drag, twisted/misaligned frames, or weatherstripping on doors may require additional spring hinges.

Series	Size	Recommended Max Door Weight (Lbs.)	Spring Hinge	Ball Bearing Hinge
For Use on 1⅜" (35 mm) Door				
1257	3½ x 3½	40	1	2
1258		70	2	1
1259		90	3	—
For Use on 1¾" (45 mm) Door				
1257	4 x 4	60	1	2
1258		85	2	1
1259		110	3	—
1257	4½ x 4	70	1	2
1258	4½ x 4½	115	2	1
1259		150	3	—

Hinge Size		Gauge of metal	Number of holes	Screw Size		Quantity		Avg weight per case (lbs)
Inches	Millimeters			Machine	Wood	Box	Case	Steel
3½ x 3½	89 x 89	0.134	6	½ x 10-24	1 x 9	2 each	40 each	27
4 x 4	102 x 102	0.134	8	½ x 12-24	1¼ x 12	2 each	40 each	33
4½ x 4	114 x 102	0.134	8	½ x 12-24	1¼ x 12	3 each	40 each	47
4½ x 4½	114 x 114	0.134	8	½ x 12-24	1¼ x 12	3 each	40 each	47

Standard screw packaging on sizes 4½ x 4 and 4½ x 4½ is all machine and ½ wood.
Machine screws for 3½ x 3½ and 4 x 4 hinges packed upon request. Specify size.

GENERAL INSTALLATION INSTRUCTIONS:

All steps must be followed to insure that the Hager Reverse Action Spring Hinge will function as designed.

1. Install reverse action spring hinge to door and frame at either center or center and bottom hinge locations. Then, install ball bearing in conjunction with reverse action spring hinge. Check for proper door clearance. There should be at least ¼" (6 mm) clearance at the bottom of the door for vacuum relief.
2. Open the door by hand to 90° angle, and push it closed. If the door latches, the hinges are ready to receive tension. If there is any resistance and the door does not latch, this indicates that the door is either out of balance or misaligned. This condition will have to be corrected before tension can be applied to the reverse action spring hinges.
3. Door weight should not exceed the recommended requirements. This includes all hardware and veneer.

SPRING HINGE ADJUSTMENT INSTRUCTIONS:

1. Install spring hinge in normal manner with the adjustment end up. Place door in closed position.
2. Insert Hex wrench in adjusting location. (Figure #1)
4. Rotate Hex wrench counter-clockwise and insert locking pin loosely in adjusting hole. (Figure #2)
5. Release Hex wrench until locking pin contacts side of adjusting hole.
6. Remove Hex wrench and check the door opening force. If opening force is not satisfactory, repeat steps 2 thru 6.

CAUTION #1: Use proper safety protection while installing the Hager Spring Hinge.
CAUTION #2: Door should be in a closed position.
CAUTION #3: Do not adjust tension past two (2) holes when a 180° opening is required.
Do not adjust tension past three (3) when a 90° opening is required.
CAUTION #4: Always rotate the Hex Wrench in a counter-clockwise direction, regardless of right or left hand application.
CAUTION #5: On 3½ x 3½ – 1257 Series — Maintain Mortise Depth at .119" (3 mm).

Figure 1

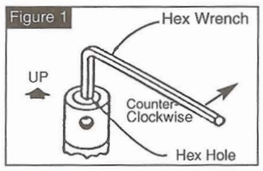

Figure 2

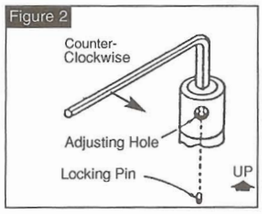

Conforms to standards approved by ANSI A156.17.

HAGER COMPANIES

Notes

PH. 1-800-325-9995 or 1-314-772-4400 • Fax 1-800-782-0149 or 1-314-772-0744

rev. 7/02

EVERYTHING HINGES ON HAGER!