Roton Concealed Leaf

Solid Core Wood Door

For medium frequency 1-3/4" solid core wood interior doors. To determine weight factors for Standard or Heavy Duty frequency doors, see section "Checking the load" on page C9. (also see 780-224).

750-134

- CLEARANCE: 5/16" (8 mm) hinge side plus standard lockside clearance
- FASTENERS: Dril-kwick® and Wood screws
- LENGTH OPTIONS: Standard and Custom
- DOOR REINFORCEMENT: None required
- FRAME REINFORCEMENT: None required
- SPECIAL FEATURES: Door edge protection lip. Offset joint to clear casing. Frame leaf alignment rib for proper hinge location

Roton model number	Length		Screw Count	
	Inches	Centimeters	# for door	# for jamb
750-134	79	200.7	16	16
750-134	83	210.8	20	20
750-134	85	215.9	20	20
750-134	95	241.3	20	20
750-134	119	302.3	14	22

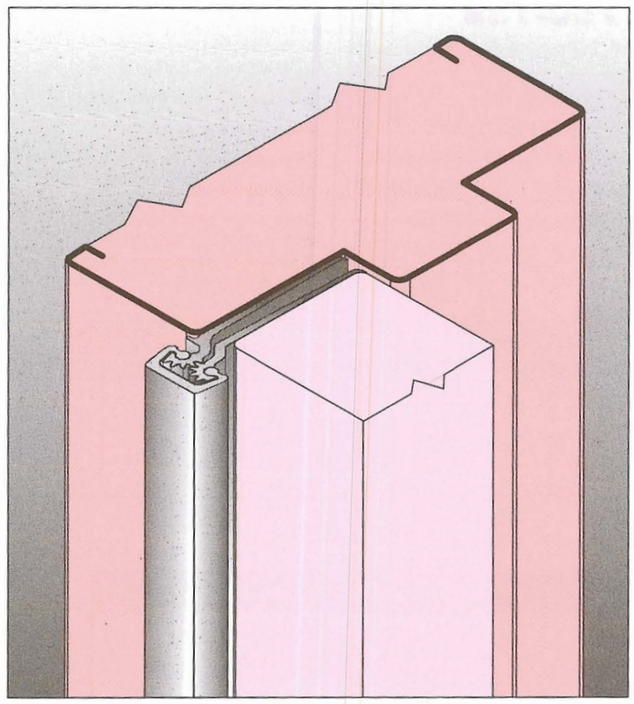

0° OPENING

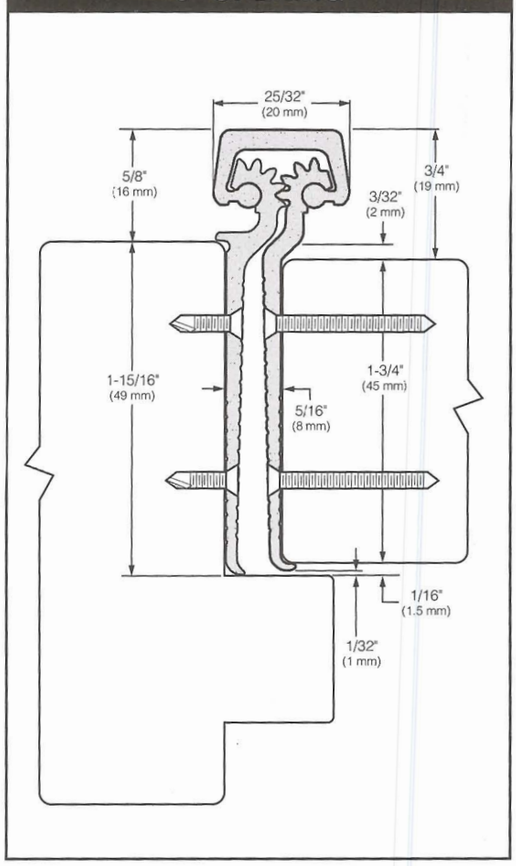

90° OPENING

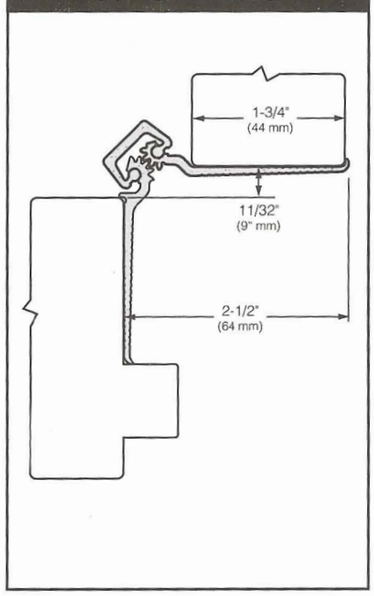

180° OPENING

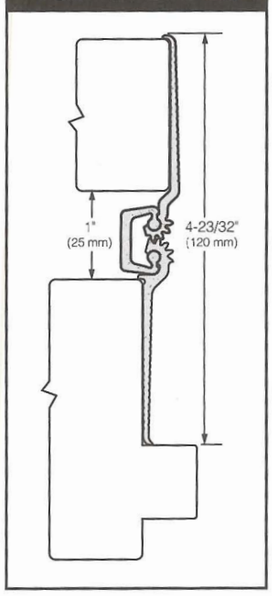

Roton Concealed Leaf

Solid Core Wood Door

For medium frequency 1-3/8" solid core wood interior doors. To determine weight factors for Standard or Heavy Duty frequency doors, see section "Checking the load" on page C9. (also see 780-112).

750-138

- CLEARANCE: 5/16" (8 mm) hinge side plus standard lockside clearance
- FASTENERS: Dril-kwick® and Wood screws
- LENGTH OPTIONS: Standard and Custom
- DOOR REINFORCEMENT: None required
- FRAME REINFORCEMENT: None required
- SPECIAL FEATURES: Door edge protection lip; Offset joint to clear casing; Frame leaf alignment rib for proper hinge location

Roton model number	Length		Screw Count	
	Inches	Centimeters	# for door	# for jamb
750-138	79	200.7	16	16
750-138	83	210.8	20	20
750-138	85	215.9	20	20
750-138	95	241.3	20	20
750-138	119	302.3	14	22

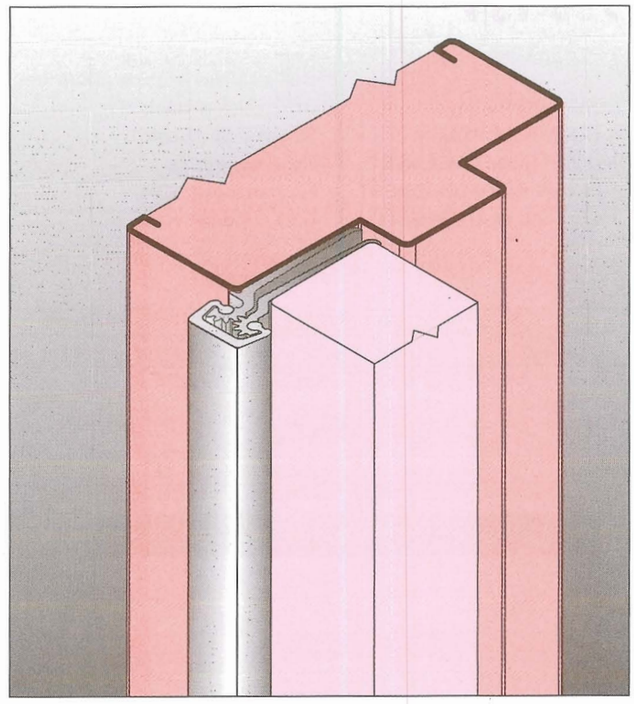

0° OPENING

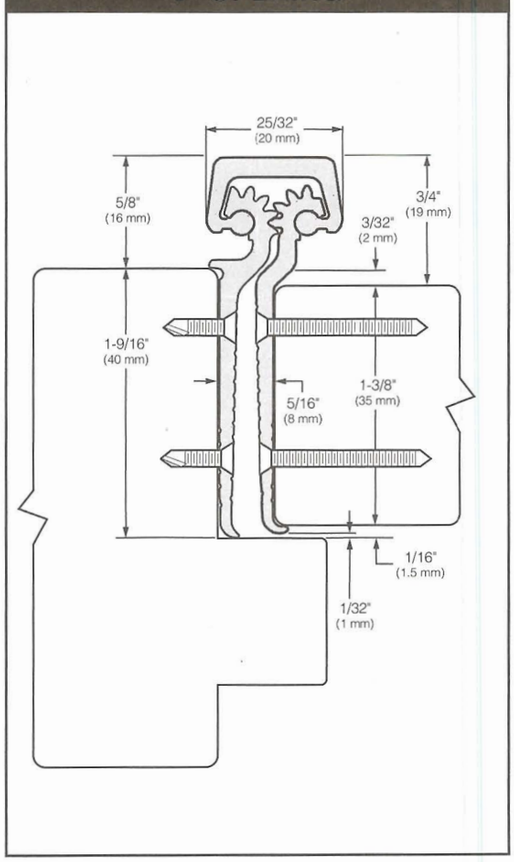

90° OPENING

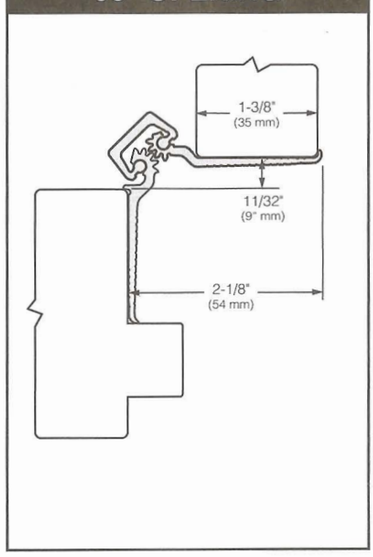

180° OPENING

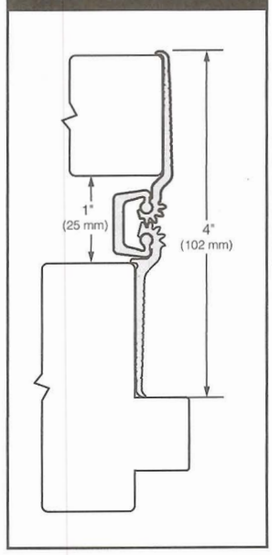

"EVERYTHING HINGES ON HAGER"

Roton Concealed Leaf

Door of any Material • Standard and Heavy Duty

Standard Duty for medium frequency 1-3/4" doors. To determine weight factors for Standard or Heavy Duty frequency doors, see section "Checking the load" on page C9. Heavy Duty for high frequency 1-3/4" doors or heavy medium frequency doors.

Not recommended for doors beveled on the hinge side

780-041
780-041 HD

- CLEARANCE: 5/16" (8 mm) hinge side plus standard lockside clearance
- FASTENERS: Dril-kwick® screws
- LENGTH OPTIONS: Standard and Custom
- DOOR REINFORCEMENT: None required to 200 lbs. Use 16 gauge channel at higher weight.
- FRAME REINFORCEMENT: None required to 200 lbs. Use 16 gauge channel at higher weight.
- SPECIAL FEATURES: Door edge protection lip Swing-clear action for patient room doors and handicapped classroom doors.
- FIRE RATING: Up to 3 hours. Specify stud or U/L. (see additional information on page 6S)

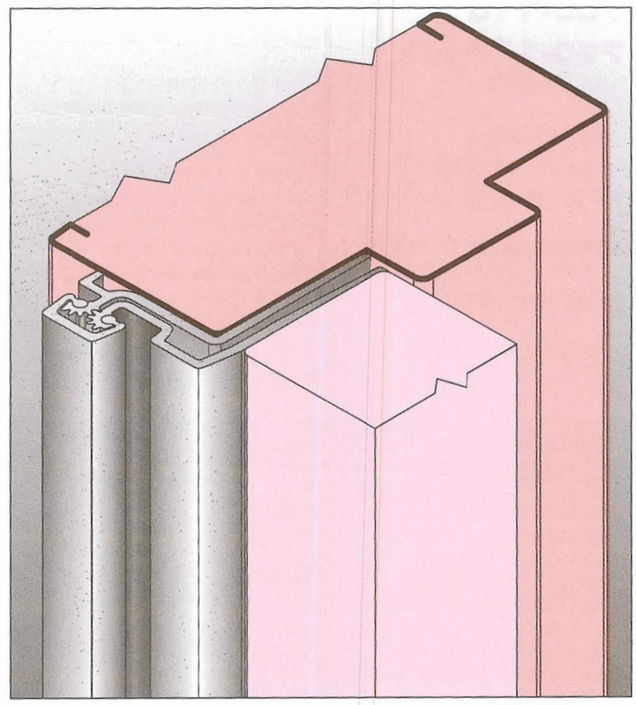

Roton model number	Length		Screw Count	
	Inches	Centimeters	# for door	# for jamb
780-041	79	200.7	15	15
780-041	83	210.8	19	19
780-041	85	215.9	19	19
780-041	95	241.3	19	19
780-041	119	302.3	21	21
780-041HD	79	200.7	15	15
780-041HD	83	210.8	19	19
780-041HD	85	215.9	19	19
780-041HD	95	241.3	19	19
780-041HD	119	302.3	21	21

0° OPENING

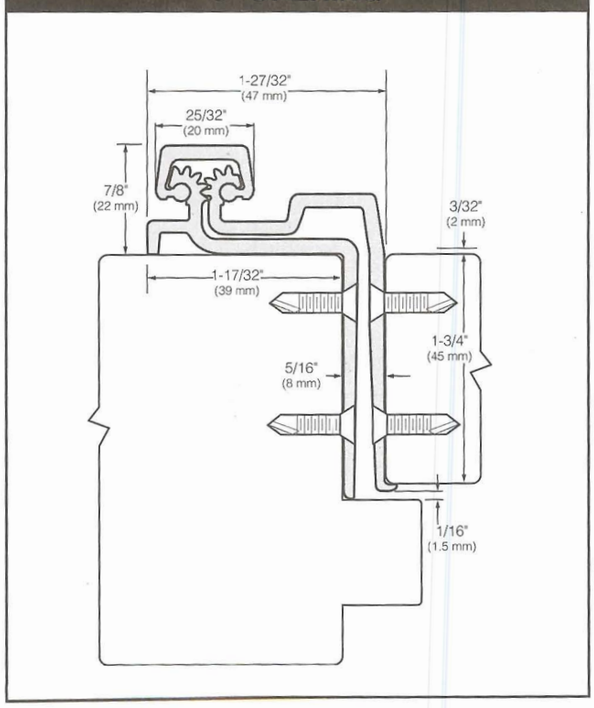

90° OPENING

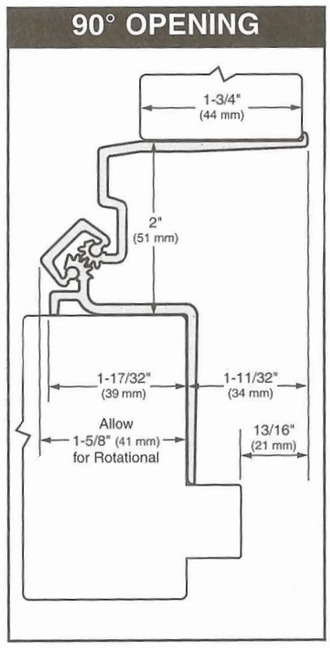

180° OPENING

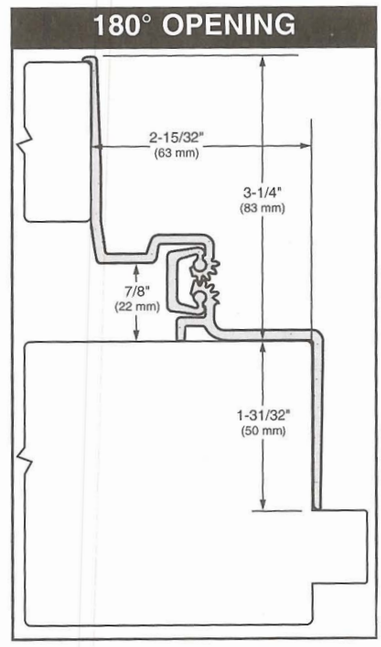

Roton Concealed Leaf

Door of any Material • Standard and Heavy Duty

Standard Duty for medium frequency doors. To determine weight factors for Standard or Heavy Duty frequency doors, see section "Checking the load" on page C9. Heavy Duty for high frequency doors or heavy medium frequency doors.

780-110
780-110 HD

- CLEARANCE: 5/16" (8 mm) hinge side plus standard lockside clearance
- FASTENERS: Dril-kwick® screws
- LENGTH OPTIONS: Standard and Custom
- DOOR REINFORCEMENT: None required to 200 lbs. Use 16 gauge channel at higher weight.
- FRAME REINFORCEMENT: None required to 200 lbs. Use 16 gauge channel at higher weight.
- FIRE RATING: Up to 3 Hours. Specify stud or U/L. (see additional information on page 6S)
- SPECIAL FEATURES: Frame and door leaf alignment ribs for proper hinge and door location.

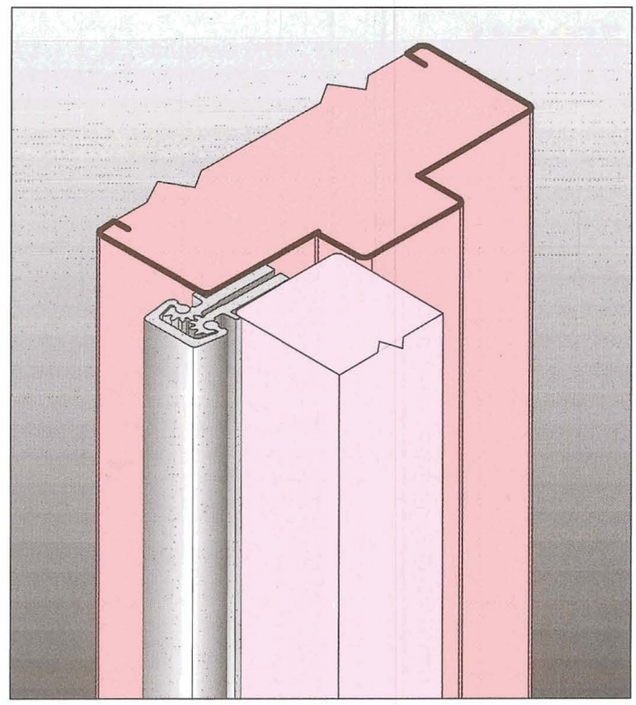

Roton model number	Length		Screw Count	
	Inches	Centimeters	# for door	# for jamb
780-110	79	200.7	10	10
780-110	83	210.8	10	10
780-110	85	215.9	10	10
780-110	95	241.3	12	12
780-110	119	302.3	14	14
780-110HD	79	200.7	18	18
780-110HD	83	210.8	18	18
780-110HD	85	215.9	18	18
780-110HD	95	241.3	21	21
780-110HD	119	302.3	25	25

0° OPENING

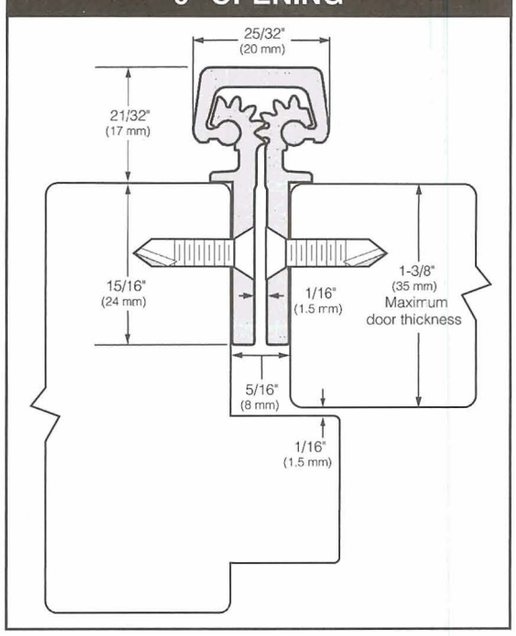

90° OPENING

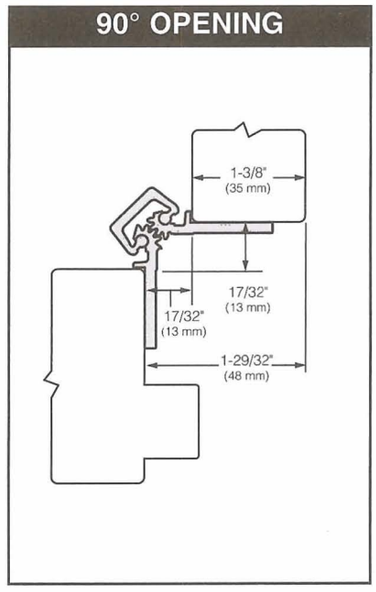

180° OPENING

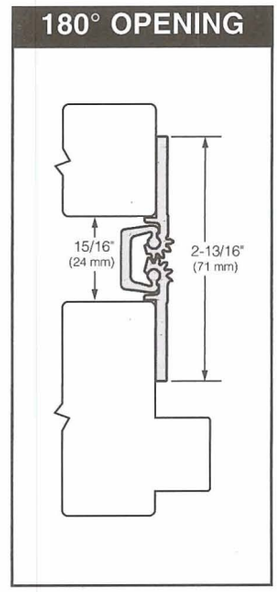

rev. 7/02

"EVERYTHING HINGES ON HAGER"

Roton Concealed Leaf

Door of any Material • Standard and Heavy Duty

Standard Duty for medium frequency doors. To determine weight factors for Standard or Heavy Duty frequency doors, see section "Checking the load" on page C9. Heavy Duty for high frequency doors or heavy medium frequency doors.

780-111
780-111 HD
780-111 LL

- CLEARANCE: 5/16" (8 mm) hinge side plus standard lockside clearance
- FASTENERS: Dril-kwick® screws
- LENGTH OPTIONS: Standard and Custom
- DOOR REINFORCEMENT: None required to 200 lbs. Use 16 gauge channel at higher weight.
- FRAME REINFORCEMENT: None required to 200 lbs. Use 16 gauge channel at higher weight.
- FIRE RATING: Up to 3 Hours. Specify stud or U/L. (see additional information on page 6S)
- SPECIAL FEATURES: Lead lined model for hospital x-ray room doors with double row of screws to straddle lead. Specify "LL". Frame and door leaf alignment ribs 1/8" (3.2 mm) inset for proper hinge and door location.

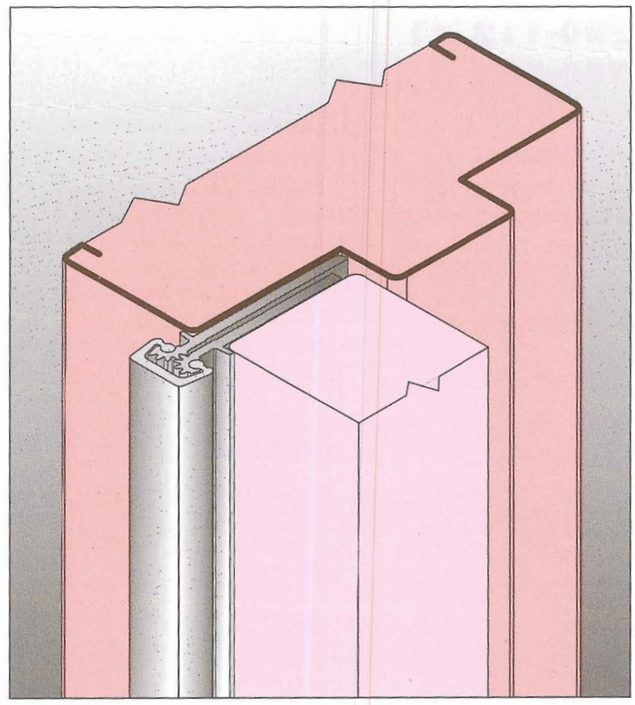

Roton model number	Length		Screw Count	
	Inches	Centimeters	# for door	# for jamb
780-111	79	200.7	15	15
780-111	83	210.8	19	19
780-111	85	215.9	19	19
780-111	95	241.3	19	19
780-111	119	302.3	21	21
780-111HD	79	200.7	15	15
780-111HD	83	210.8	19	19
780-111HD	85	215.9	19	19
780-111HD	95	241.3	19	19
780-111HD	119	302.3	21	21
780-111LL	79	200.7	36	36
780-111LL	83	210.8	36	36
780-111LL	85	215.9	36	36
780-111LL	95	241.3	42	42
780-111LL	119	302.3	48	48

0° OPENING

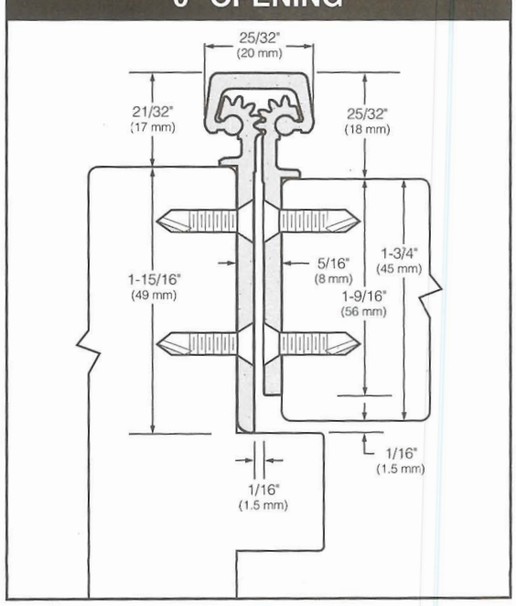

90° OPENING

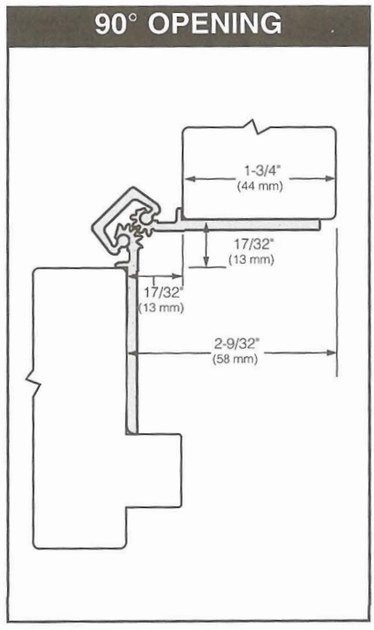

180° OPENING

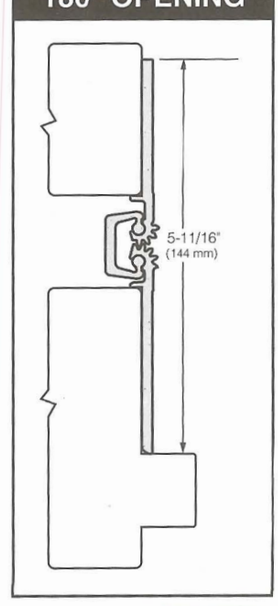

Roton Concealed Leaf

Door of any Material • Standard and Heavy Duty

Standard Duty for medium frequency doors. To determine weight factors for Standard or Heavy Duty frequency doors, see section "Checking the load" on page C9. Heavy Duty for high frequency doors or heavy medium frequency doors.

780-112
780-112 HD
780-112 LL

- CLEARANCE: 5/16" (8 mm) hinge side plus standard lockside clearance
- FASTENERS: Dril-kwick® screws
- LENGTH OPTIONS: Standard and Custom screws
- DOOR REINFORCEMENT: None required to 200 lbs. Use 16 gauge channel at higher weight.
- FRAME REINFORCEMENT: None required to 200 lbs. Use 16 gauge channel at higher weight.
- FIRE RATING: Up to 3 Hours. Specify stud or U/L. (see additional information in front of catalog)
- SPECIAL FEATURES: Lead lined model for hospital x-ray room doors with double row of screws to straddle lead. Specify "LL". Frame and door leaf alignment ribs for proper hinge and door location.

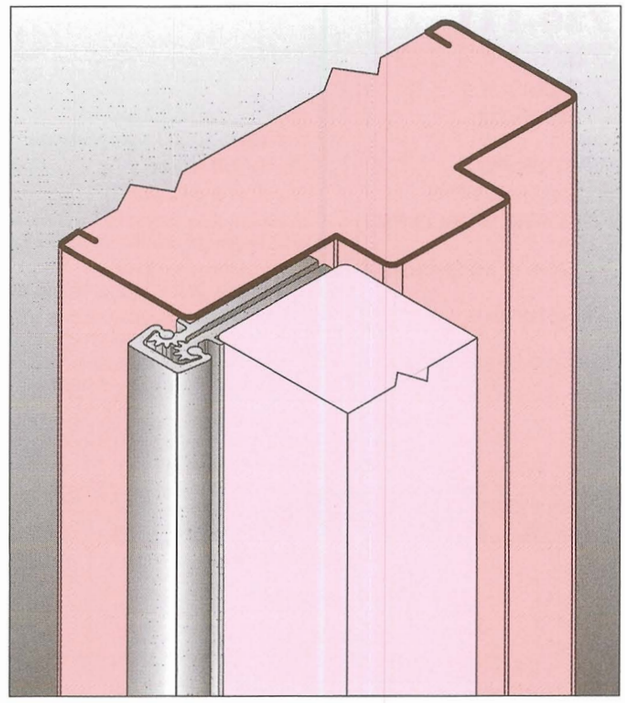

Roton model number	Length		Screw Count	
	Inches	Centimeters	# for door	# for jamb
780-112	79	200.7	15	15
780-112	83	210.8	19	19
780-112	85	215.9	19	19
780-112	95	241.3	19	19
780-112	119	302.3	21	21
780-112HD	79	200.7	15	15
780-112HD	83	210.8	19	19
780-112HD	85	215.9	19	19
780-112HD	95	241.3	19	19
780-112HD	119	302.3	21	21
780-112LL	79	200.7	36	36
780-112LL	83	210.8	36	36
780-112LL	85	215.9	36	36
780-112LL	95	241.3	42	42
780-112LL	119	302.3	48	96

0° OPENING

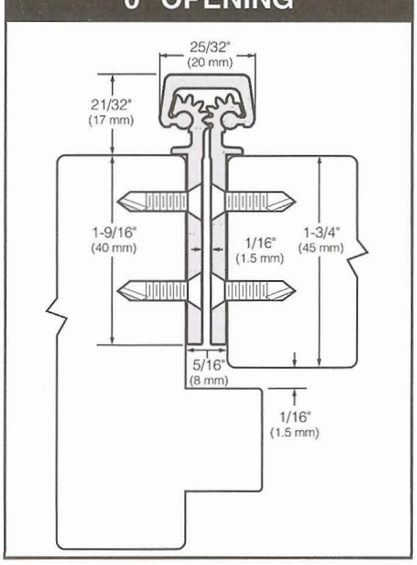

90° OPENING

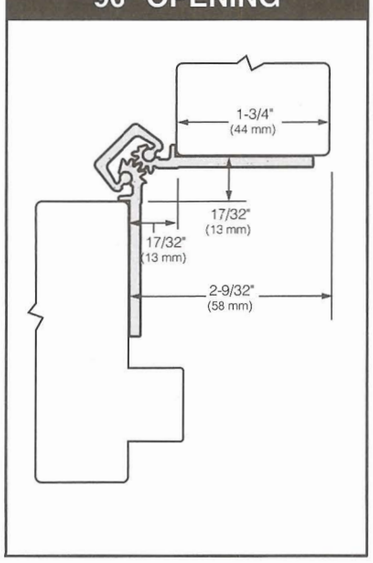

180° OPENING

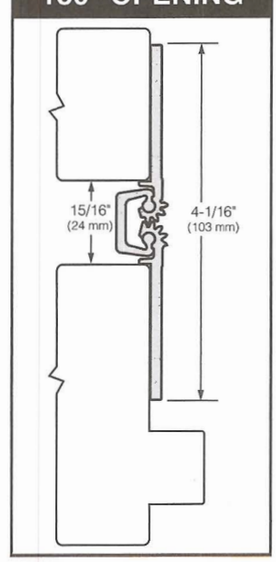

PH. 1-800-325-9995 or 1-314-772-4400 • Fax 1-800-782-0149 or 1-314-772-0744

rev. 7/02

"EVERYTHING HINGES ON HAGER"

Roton Concealed Leaf

Door of any Material • Standard and Heavy Duty

Standard Duty for medium frequency doors. To determine weight factors for Standard or Heavy Duty frequency doors, see section "Checking the load" on page C9. Heavy Duty for high frequency doors or heavy medium frequency doors.

780-113
780-113 HD

- CLEARANCE: 13/16" (21 mm) hinge side plus standard lockside clearance
- FASTENERS: Dril-kwick® screws
- LENGTH OPTIONS: Standard and Custom
- DOOR REINFORCEMENT: None required to 200 lbs. Use 16 gauge channel at higher weight.
- FRAME REINFORCEMENT: None required to 200 lbs. Use 16 gauge channel at higher weight.
- SPECIAL FEATURES: "Safety Hinge" for kindergartens, nursing homes, daycares, etc. (when used without frame stop)

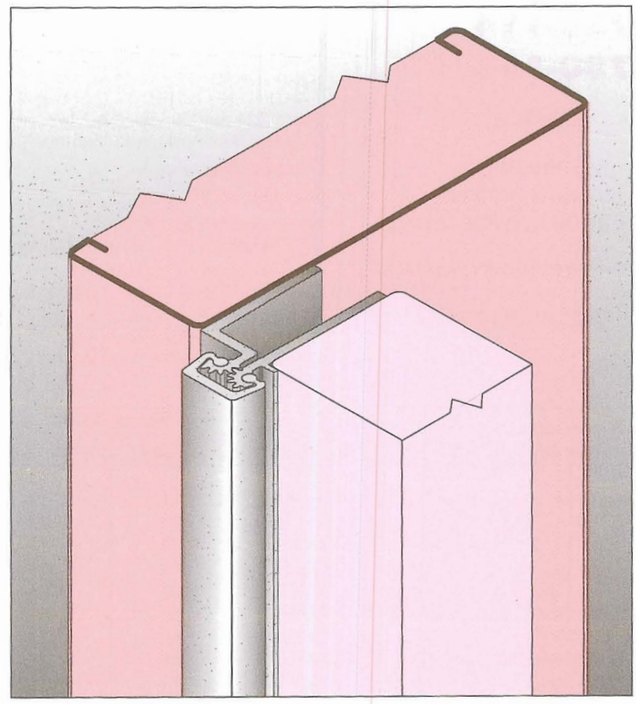

Roton model number	Length		Screw Count	
	Inches	Centimeters	# for door	# for jamb
780-113	79	200.7	15	15
780-113	83	210.8	19	19
780-113	85	215.9	19	19
780-113	95	241.3	19	19
780-113	119	302.3	21	21
780-113HD	79	200.7	15	15
780-113HD	83	210.8	19	19
780-113HD	85	215.9	19	19
780-113HD	95	241.3	19	19
780-113HD	119	302.3	21	21

0° OPENING

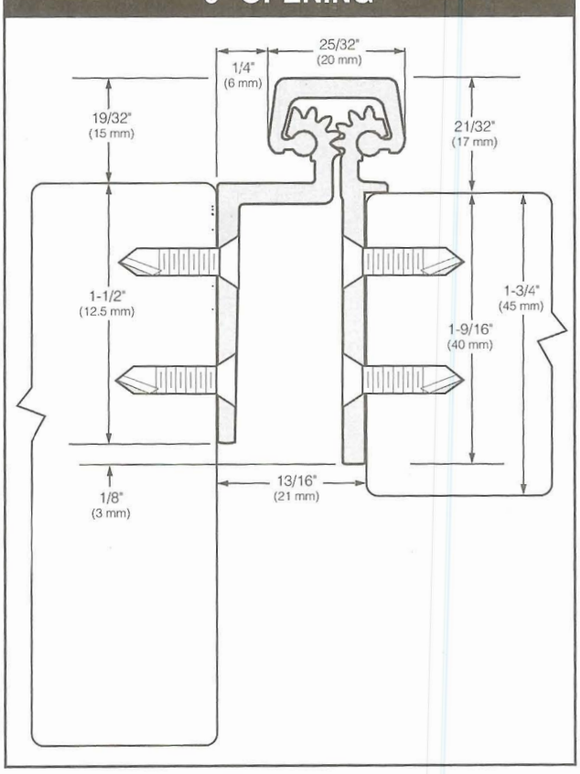

90° OPENING

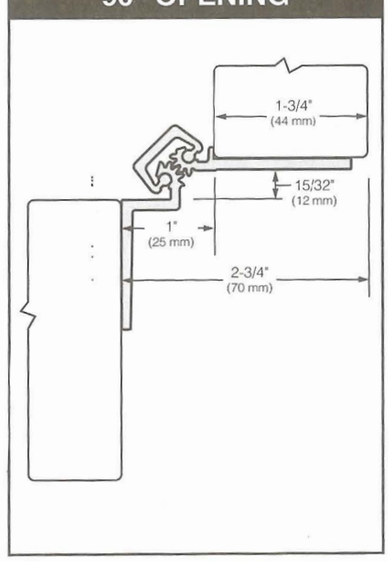

180° OPENING

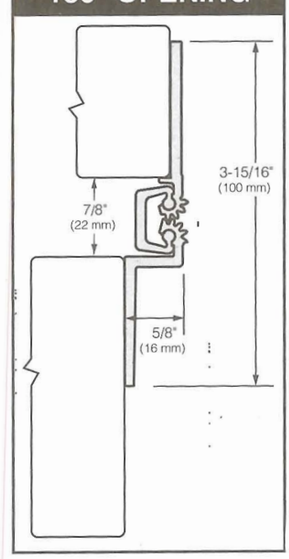

Roton Concealed Leaf

Door of any Material • Standard and Heavy Duty

Standard Duty for medium frequency doors. To determine weight factors for Standard or Heavy Duty frequency doors, see section "Checking the load" on page C9. Heavy Duty for high frequency doors or heavy medium frequency doors.

780-114
780-114 HD

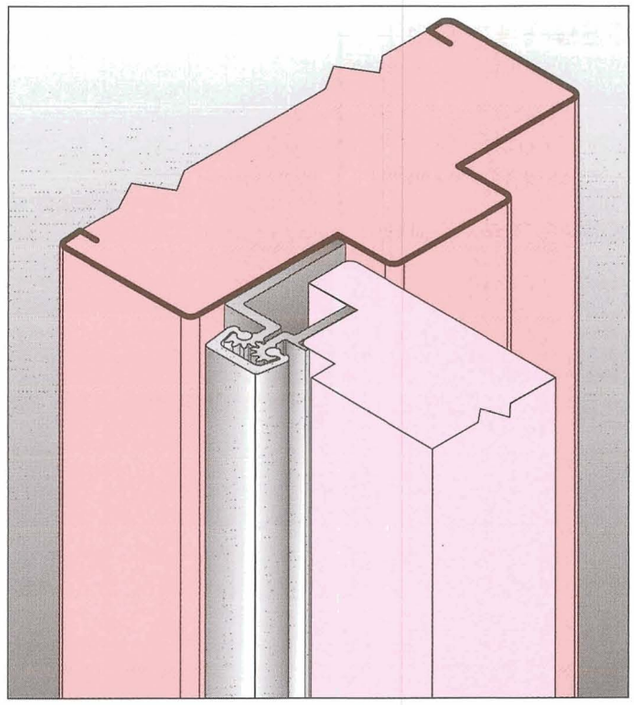

- CLEARANCE: 15/16" (24 mm) hinge side plus standard lockside clearance
- FASTENERS: Dril-kwick® screws
- LENGTH OPTIONS: Standard and Custom
- DOOR REINFORCEMENT: None required to 200 lbs. Use 16 gauge channel at higher weight.
- FRAME REINFORCEMENT: None required to 200 lbs. Use 16 gauge channel at higher weight.
- SPECIAL FEATURES: For deep inset or flush-with-frame (when using rabbeted frames) applications, center hung doors, heavy cabinets.

Roton model number	Length		Screw Count	
	Inches	Centimeters	# for door	# for jamb
780-114	79	200.7	10	15
780-114	83	210.8	10	15
780-114	85	215.9	10	15
780-114	95	241.3	12	17
780-114	119	302.3	14	19
780-114HD	79	200.7	18	23
780-114HD	83	210.8	18	23
780-114HD	85	215.9	18	23
780-114HD	95	241.3	21	26
780-114HD	119	302.3	25	30

0° OPENING

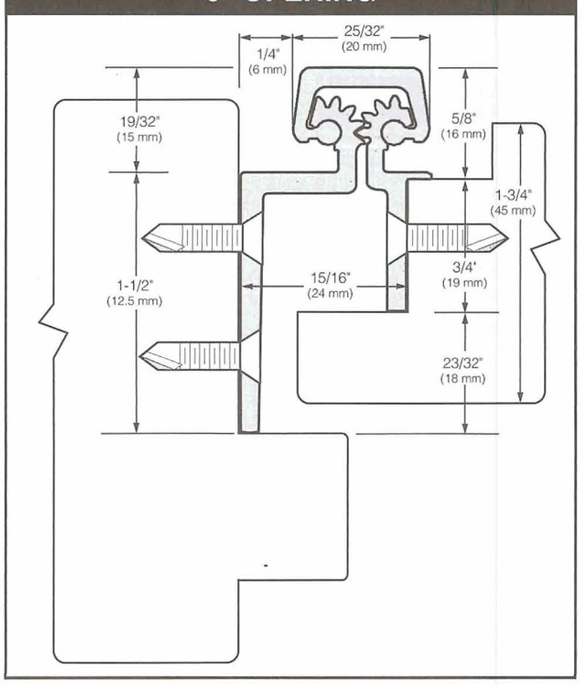

90° OPENING

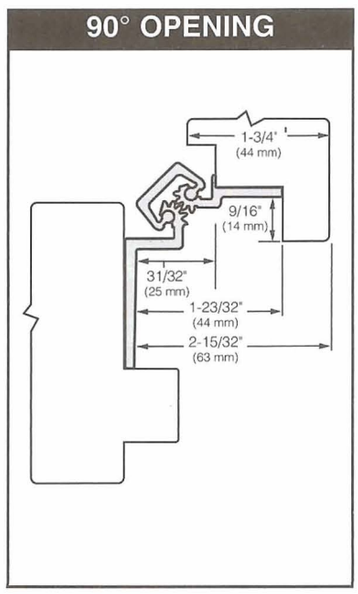

180° OPENING

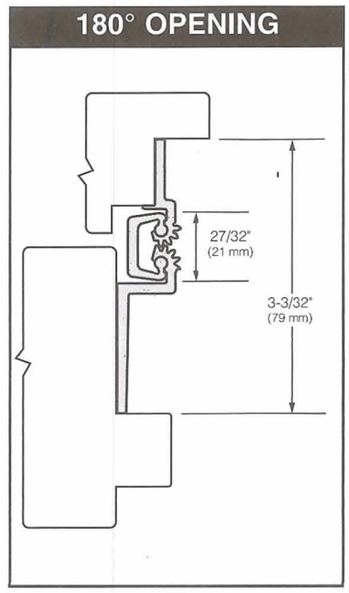

rev. 7/02

"EVERYTHING HINGES ON HAGER"

Roton Concealed Leaf

Door of any Material • Standard and Heavy Duty

Standard Duty for medium frequency doors. To determine weight factors for Standard or Heavy Duty frequency doors, see section "Checking the load" on page C9. Heavy Duty for high frequency doors or heavy medium frequency doors.

780-208
780-208 HD

- CLEARANCE: 1/2" (13 mm) hinge side plus standard lockside clearance
- FASTENERS: Dril-kwick® screws
- LENGTH OPTIONS: Standard and Custom
- DOOR REINFORCEMENT: None required to 200 lbs. Use 16 gauge channel at higher weight.
- FRAME REINFORCEMENT: None required to 200 lbs. Use 16 gauge channel at higher weight.
- SPECIAL FEATURES: For millwork, toilet stall doors, windows, and rabbeted bifold doors.

Roton model number	Length		Screw Count	
	Inches	Centimeters	# for door	# for jamb
780-208	79	200.7	10	10
780-208	83	210.8	10	10
780-208	85	215.9	10	10
780-208	95	241.3	12	12
780-208	119	302.3	14	14
780-208HD	79	200.7	18	18
780-208HD	83	210.8	18	18
780-208HD	85	215.9	18	18
780-208HD	95	241.3	21	21
780-208HD	119	302.3	25	25

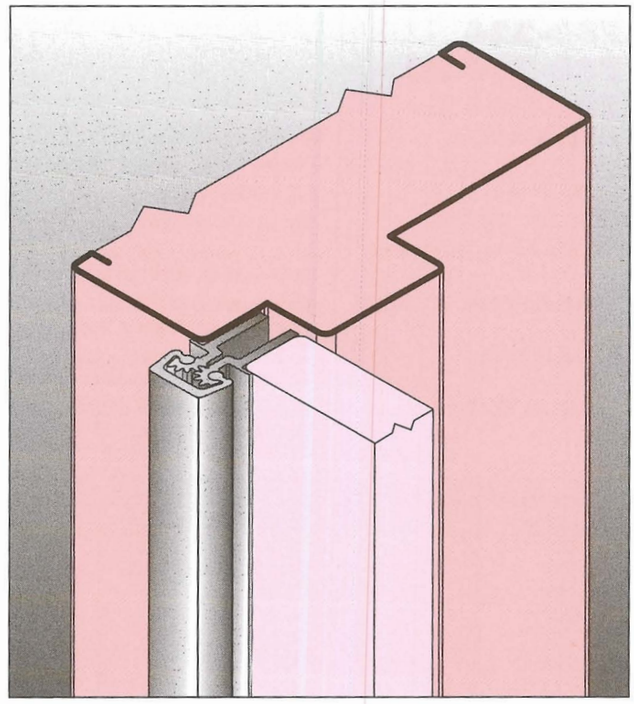

0° OPENING

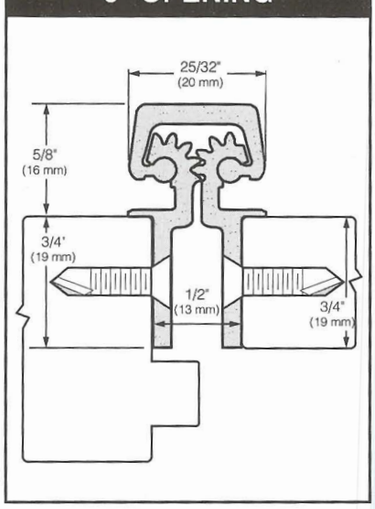

90° OPENING

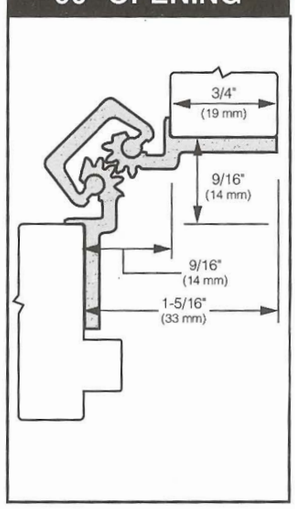

180° OPENING

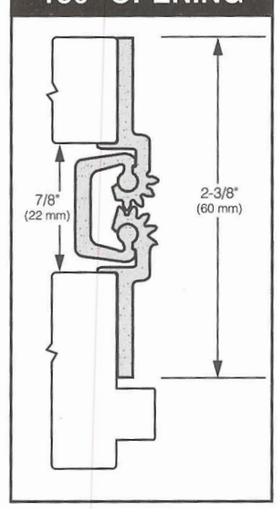

Roton Concealed Leaf

Door of any Material • Standard and Heavy Duty

Standard Duty for medium frequency 1-3/4" doors. To determine weight factors for Standard or Heavy Duty frequency doors, see section "Checking the load" on page C9. Heavy Duty for high frequency 1-3/4" doors or heavy medium frequency 1-3/4" doors.

780-224
780-224 HD
780-224 LL

- CLEARANCE: 5/16" (8 mm) hinge side plus standard lockside clearance
- FASTENERS: Dril-kwick® screws
- LENGTH OPTIONS: Standard and Custom
- DOOR REINFORCEMENT: None required to 200 lbs. Use 16 gauge channel at higher weight.
- FRAME REINFORCEMENT: None required to 200 lbs. Use 16 gauge channel at higher weight.
- FIRE RATING: Up to 3 Hours. Specify stud or U/L. (see additional information in front of 6S)
- SPECIAL FEATURES: Lead lined model for hospital x-ray room (doors with double row of screws to straddle lead. Specify "LL".)

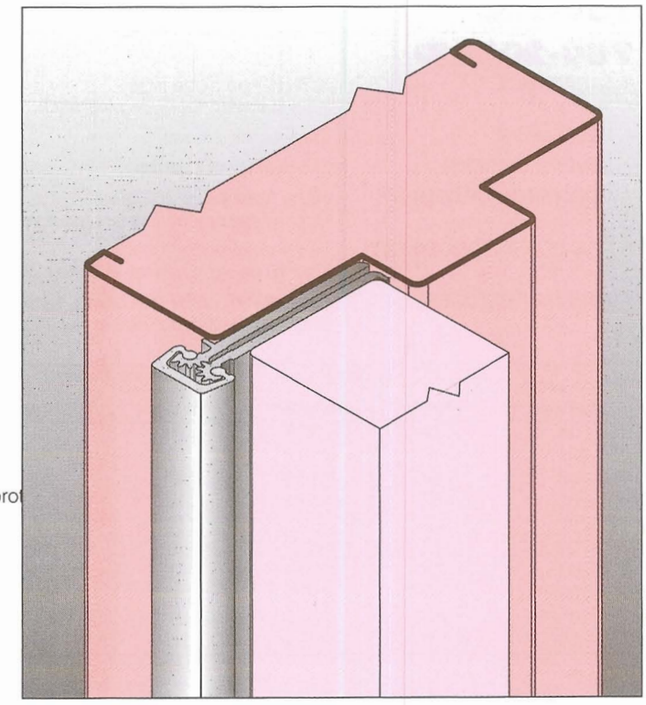

Roton model number	Length		Screw Count	
	Inches	Centimeters	# for door	# for jamb
780-224	79	200.7	15	15
780-224	83	210.8	19	19
780-224	85	215.9	19	19
780-224	95	241.3	19	19
780-224	119	302.3	21	21
780-224HD	79	200.7	15	15
780-224HD	83	210.8	19	19
780-224HD	85	215.9	19	19
780-224HD	95	241.3	19	19
780-224HD	119	302.3	21	21
780-224LL	79	200.7	36	36
780-224LL	83	210.8	36	36
780-224LL	85	215.9	36	36
780-224LL	95	241.3	42	42
780-224LL	119	302.3	48	48

0° OPENING

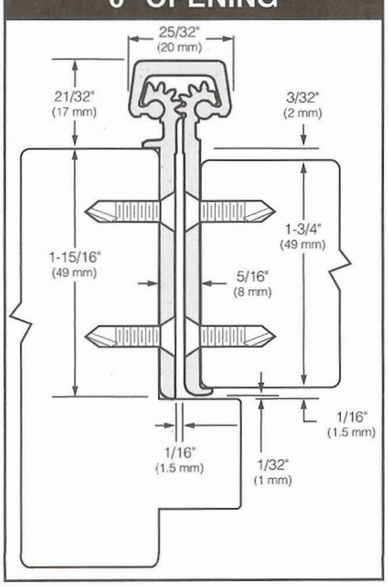

90° OPENING

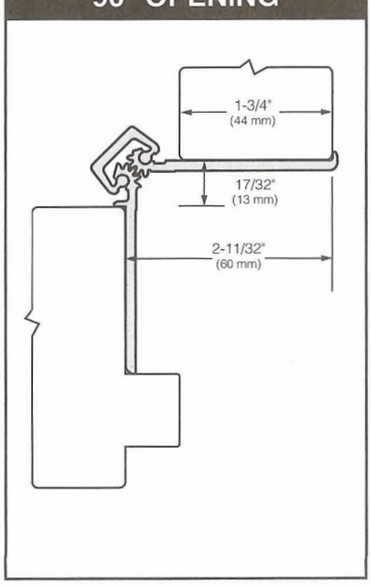

180° OPENING

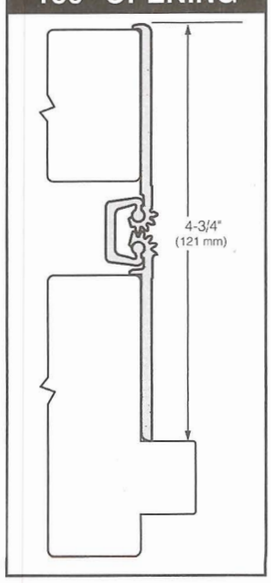

PH. 1-800-325-9995 or 1-314-772-4400 • Fax 1-800-782-0149 or 1-314-772-0744

rev. 7/02

"EVERYTHING HINGES ON HAGER"

Roton Concealed Leaf

Door of any Material • Standard and Heavy Duty

Standard Duty for medium frequency 2" doors or greater. To determine weight factors for Standard or Heavy Duty frequency doors, see section "Checking the load" on page C9. Heavy Duty for high frequency 2" doors or greater or heavy medium frequency 2" doors or greater.

780-226
780-226 HD
780-226 LL

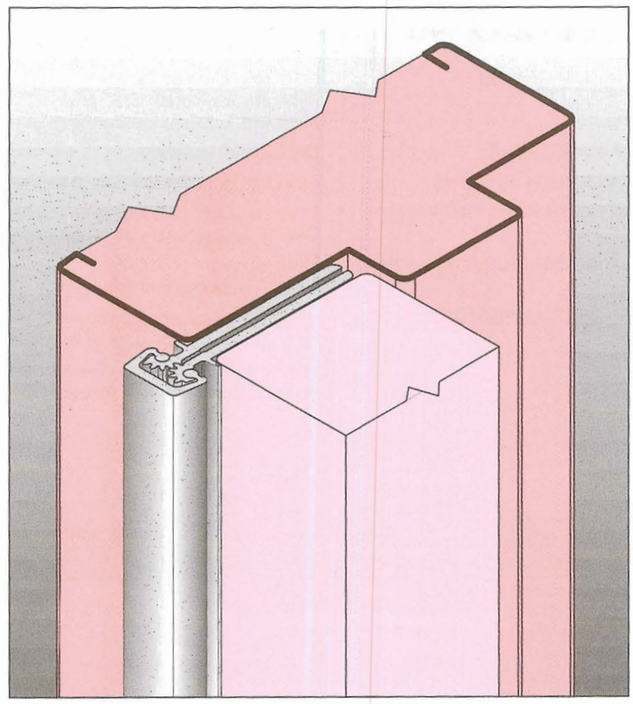

- CLEARANCE: 5/16" (8 mm) hinge side plus standard lockside clearance
- FASTENERS: Dril-kwick® screws
- LENGTH OPTIONS: Standard and Custom
- DOOR REINFORCEMENT: None required to 200 lbs. Use 16 gauge channel at higher weight.
- FRAME REINFORCEMENT: None required to 200 lbs. Use 16 gauge channel at higher weight.
- FIRE RATING: Up to 3 Hours. Specify stud or U/L. (see additional information on page 6S)
- SPECIAL FEATURES: Lead lined model for hospital x-ray room–doors with double row of screws to straddle lead. Specify "LL".

Roton model number	Length		Screw Count	
	Inches	Centimeters	# for door	# for jamb
780-226	79	200.7	15	15
780-226	83	210.8	19	19
780-226	85	215.9	19	19
780-226	95	241.3	19	19
780-226	119	302.3	21	21
780-226HD	79	200.7	15	15
780-226HD	83	210.8	19	19
780-226HD	85	215.9	19	19
780-226HD	95	241.3	19	19
780-226HD	119	302.3	21	21
780-226LL	79	200.7	36	36
780-226LL	83	210.8	36	36
780-226LL	85	215.9	36	36
780-226LL	95	241.3	42	42
780-226LL	119	302.3	48	48

0° OPENING

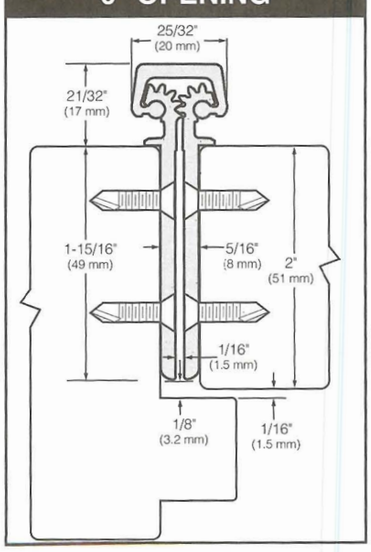

90° OPENING

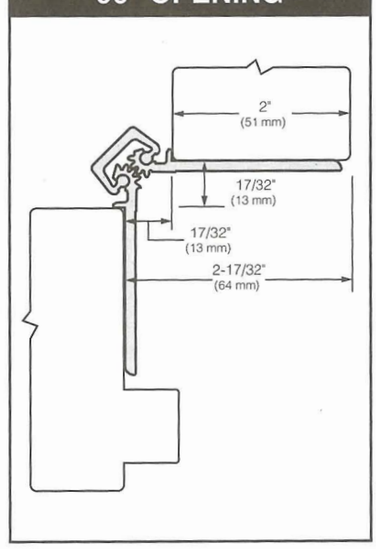

180° OPENING

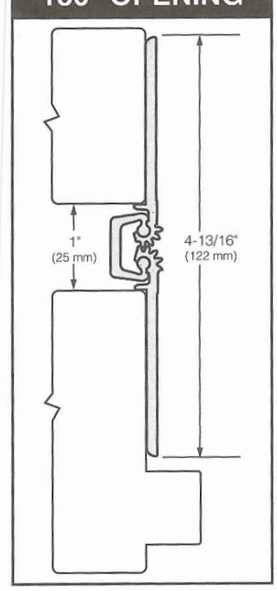

Roton Concealed Leaf

Wide Throw • Door of any Material • Heavy Duty

Heavy Duty for high frequency doors or heavy medium frequency doors. To determine weight factors for Standard or Heavy Duty frequency doors, see section "Checking the load" on page C9.

780-235 HD

- CLEARANCE: 5/16" (8 mm) hinge side allow an additional 1/32" plus standard lockside clearance
- FASTENERS: Dril-kwick® screws
- LENGTH OPTIONS: Standard and Custom lengths available
- DOOR REINFORCEMENT: None required to 200 lbs. Use 16 gauge channel at higher weight.
- FRAME REINFORCEMENT: None required to 200 lbs. Use 16 gauge channel at higher weight.
- SPECIAL FEATURES: Wide-Throw for applications that require extra clearance for door or frame.

  Frame and door leaf alignment ribs for proper hinge and door location.

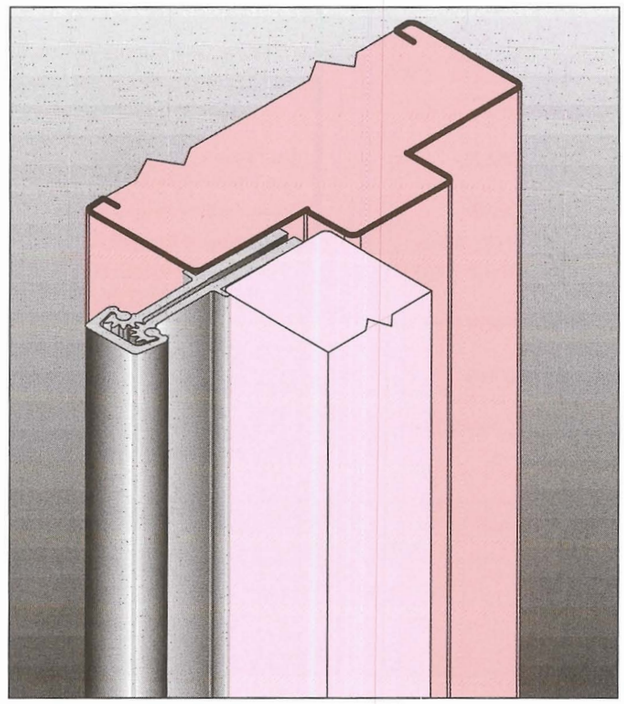

Roton model number	Length		Screw Count	
	Inches	Centimeters	# for door	# for jamb
780-235HD	79	200.7	15	15
780-235HD	83	210.8	19	19
780-235HD	85	215.9	19	19
780-235HD	95	241.3	19	19
780-235HD	119	302.3	21	21

0° OPENING

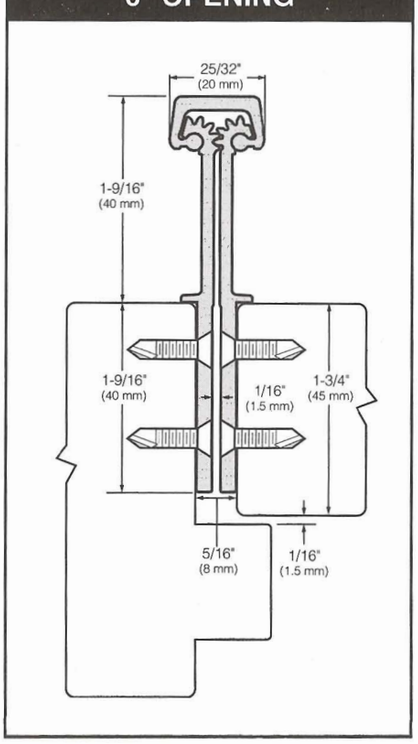

90° OPENING

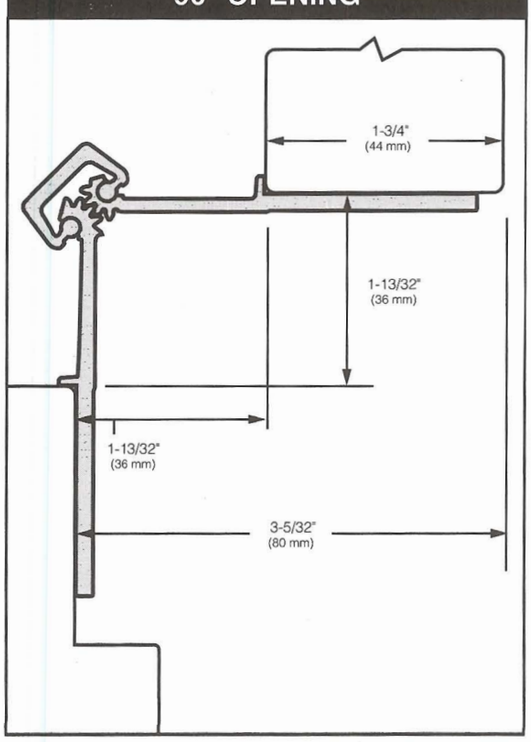

180° OPENING

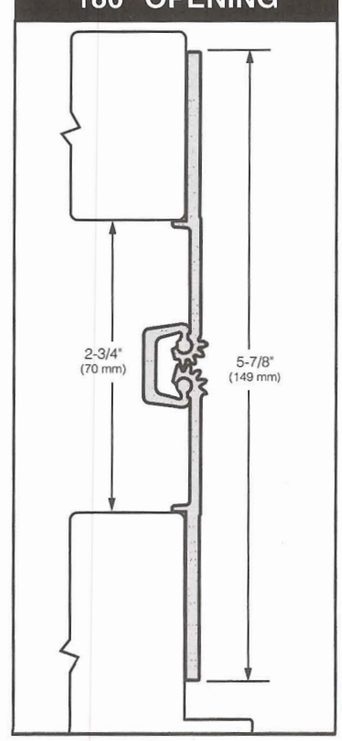

PH. 1-800-325-9995 or 1-314-772-4400 • Fax 1-800-782-0149 or 1-314-772-0744

rev. 7/02

"EVERYTHING HINGES ON HAGER"