Roton Full Surface

Door of any Material • Standard and Heavy Duty

Standard Duty for medium frequency doors. To determine weight factors for Standard or Heavy Duty frequency doors, see section "Checking the load" on page C9. Heavy Duty for high frequency doors or heavy medium frequency doors.

780-057
780-057 HD

- CLEARANCE: None required for hinge side.
- FASTENERS: Sexbolts (Wood or machine screws available upon request)
- LENGTH OPTIONS: Standard and Custom
- DOOR REINFORCEMENT: None required
- FRAME REINFORCEMENT: None required
- SPECIAL FEATURES: Bi-fold applications, Security moldings

Roton model number	Length		Hole Count	
	Inches	Centimeters	# Sex bolts	# Pan Head
780-057	79	200.7	12	22
780-057	83	210.8	12	26
780-057	85	215.9	12	26
780-057	95	241.3	14	24
780-057	119	302.3	16	30
780-057HD	79	200.7	16	34
780-057HD	83	210.8	16	38
780-057HD	85	215.9	16	38
780-057HD	95	241.3	18	40
780-057HD	119	302.3	20	52

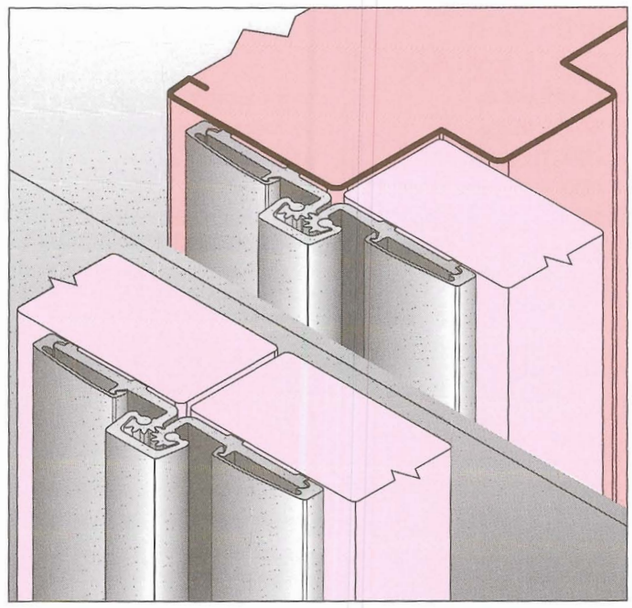

0° OPENING — DOOR TO DOOR

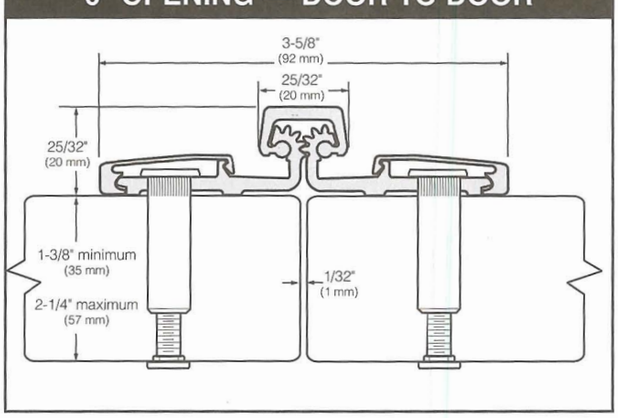

0° OPENING — JAMB TO DOOR

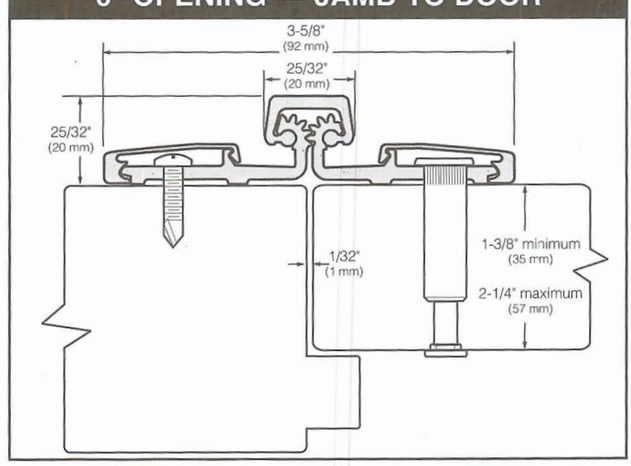

90° OPENING

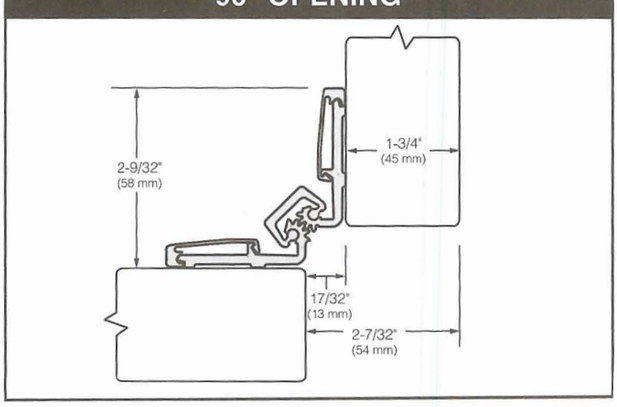

180° OPENING

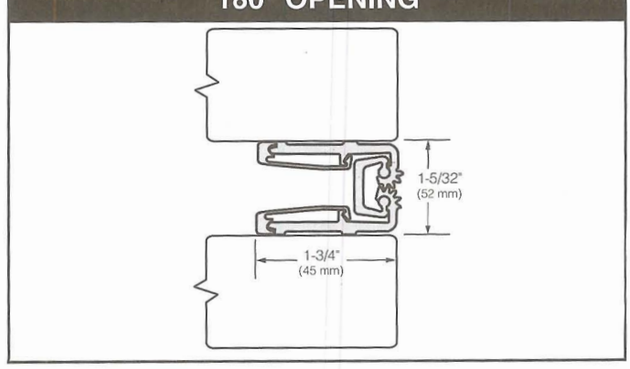

Roton Full Surface

Door of any Material • Standard and Heavy Duty

Standard Duty for medium frequency doors. To determine weight factors for Standard or Heavy Duty frequency doors, see section "Checking the load" on page C9. Heavy Duty for high frequency doors or heavy medium frequency doors.

780-157
780-157 HD

- CLEARANCE: None required for hinge side.
- FASTENERS: Dril-Kwick® screws and Sexbolts
- LENGTH OPTIONS: Standard and Custom
- DOOR REINFORCEMENT: None required
- FRAME REINFORCEMENT: None required to 200 lbs. Use 16 gauge channel at higher weight.
- SPECIAL FEATURES: For surface applications where frame face dimension is limited
  Security moldings

Roton model number	Length		Hole Count	
	Inches	Centimeters	# Sex bolts	# Pan Head
780-157	79	200.7	6	20
780-157	83	210.8	6	24
780-157	85	215.9	6	24
780-157	95	241.3	7	24
780-157	119	302.3	8	30
780-157HD	79	200.7	8	34
780-157HD	83	210.8	8	38
780-157HD	85	215.9	8	38
780-157HD	95	241.3	9	41
780-157HD	119	302.3	10	52

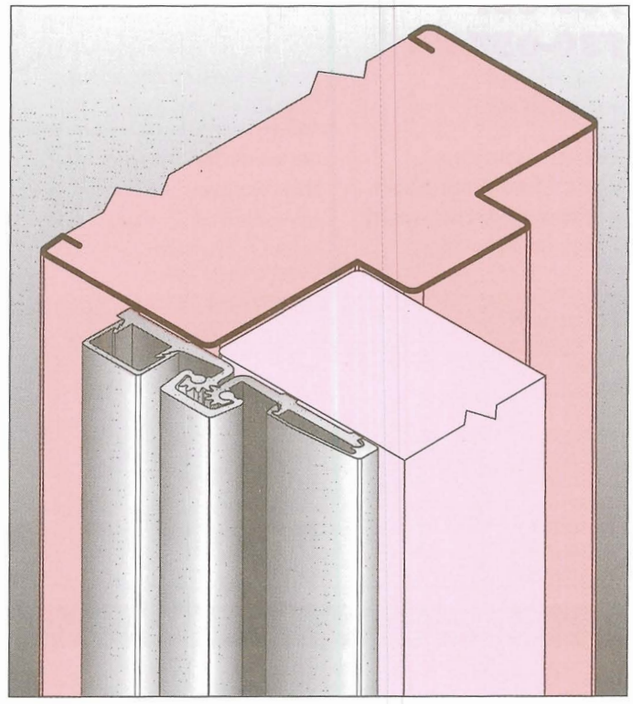

0° OPENING

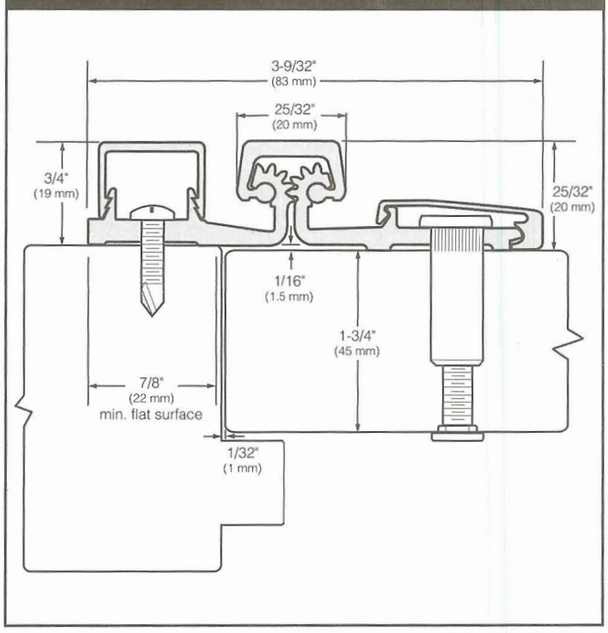

90° OPENING

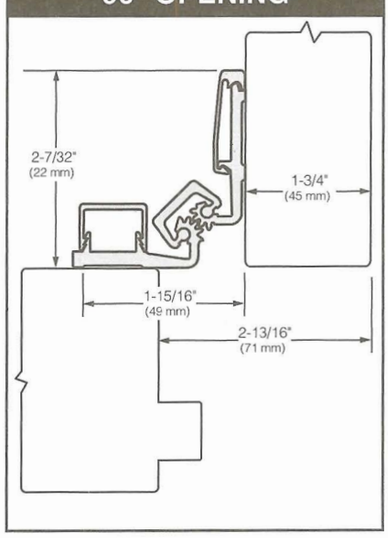

180° OPENING

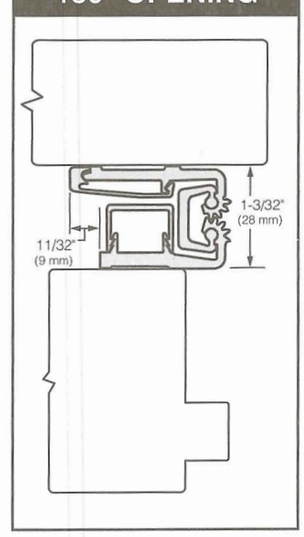

"EVERYTHING HINGES ON HAGER"

Roton Full Surface

Door of any Material • Standard and Heavy Duty

Standard Duty for medium frequency doors. To determine weight factors for Standard or Heavy Duty frequency doors, see section "Checking the load" on page C9. Heavy Duty for high frequency doors or heavy medium frequency doors.

780-210
780-210 HD

- CLEARANCE: None required for hinge side. 1-5/8" (41 mm) minimum frame face required plus 3/16" (5 mm) rotational clearance
- FASTENERS: Dril-Kwick® screws and Sexbolts
- LENGTH OPTIONS: Standard and Custom
- DOOR REINFORCEMENT: None required
- FRAME REINFORCEMENT: None required to 200 lbs. Use 16 gauge channel at higher weight.
- SPECIAL FEATURES: "Zero clearance" required for hinge side. Can be used with any door and frame material. Security moldings

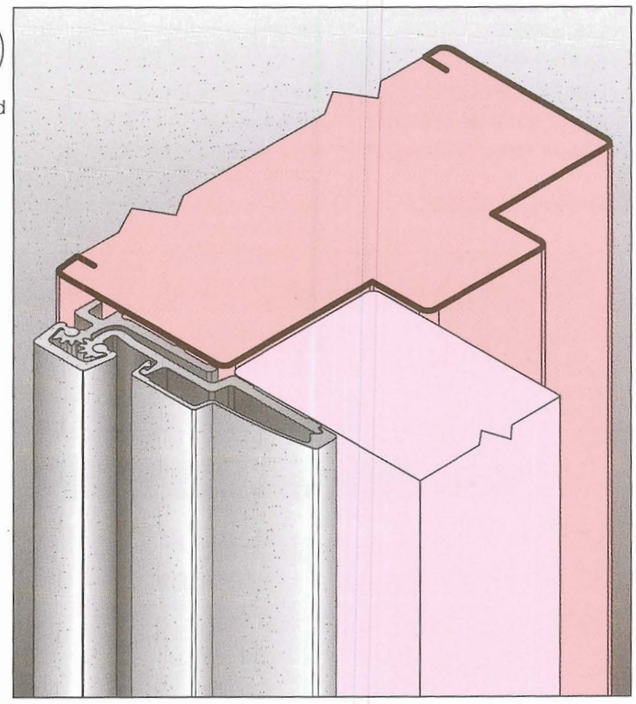

Roton model number	Length		Hole Count		
	Inches	Centimeters	# Sex bolts	# Pan Head	# for jamb
780-210	79	200.7	2	11	9
780-210	83	210.8	8	11	11
780-210	85	215.9	8	11	11
780-210	95	241.3	9	10	12
780-210	119	302.3	10	13	15
780-210HD	79	200.7	8	17	17
780-210HD	83	210.8	10	17	19
780-210HD	85	215.9	10	17	19
780-210HD	95	241.3	11	18	21
780-210HD	119	302.3	12	24	26

0° OPENING

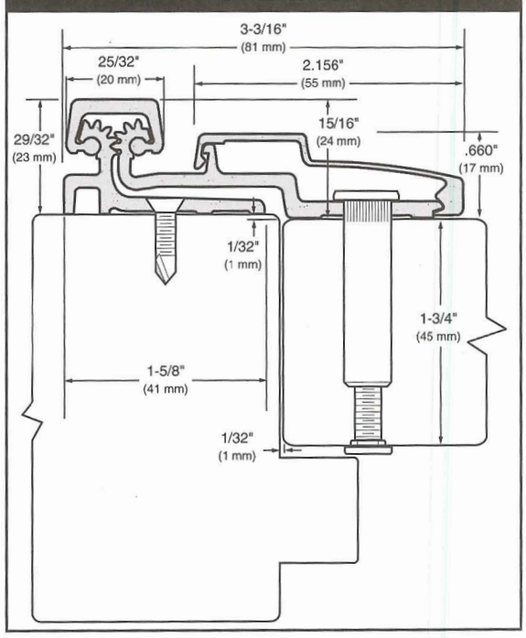

90° OPENING

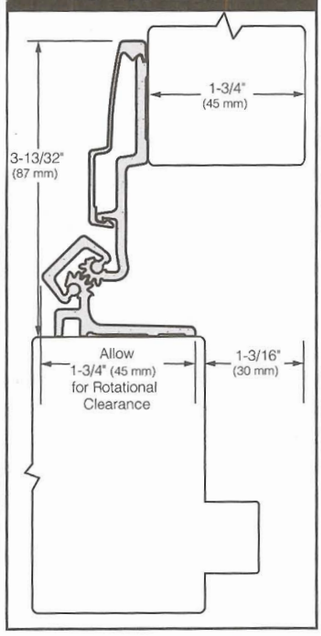

180° OPENING

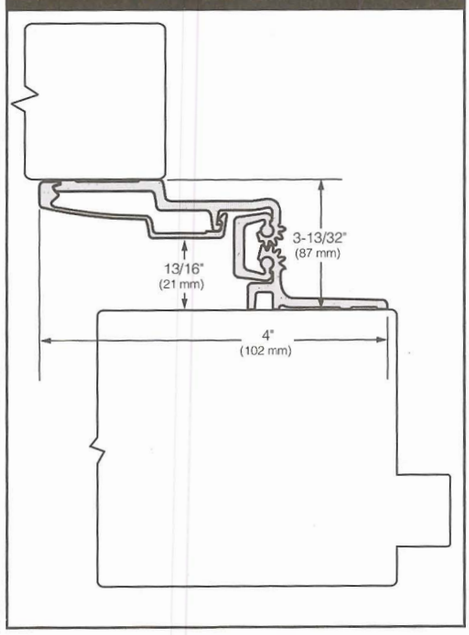

Roton Full Surface

Door of any Material • Heavy Duty

Heavy Duty for high frequency doors or heavy medium frequency doors.. To determine weight factors for Standard or Heavy Duty frequency doors, see section "Checking the load" on page C9.

780-257 HD

- CLEARANCE: 7/8" (22 mm) to 2-1/4" (57 mm) mullion width.
- FASTENERS: Dril-Kwick® screws and Sexbolts
- LENGTH OPTIONS: Standard and Custom
- DOOR REINFORCEMENT: None required
- FRAME REINFORCEMENT: None required to 200 lbs. Use 16 gauge channel at higher weight.
- SPECIAL FEATURES: Double hinge for hanging two entrance doors from a fixed mullion. Security moldings

Roton model number	Length		Hole Count		
	Inches	Centimeters	# Sex bolts	# Pan Head	# for jamb
780-257HD	79	200.7	16	34	17
780-257HD	83	210.8	16	38	19
780-257HD	85	215.9	16	38	19
780-257HD	95	241.3	18	40	21
780-257HD	119	302.3	20	52	26

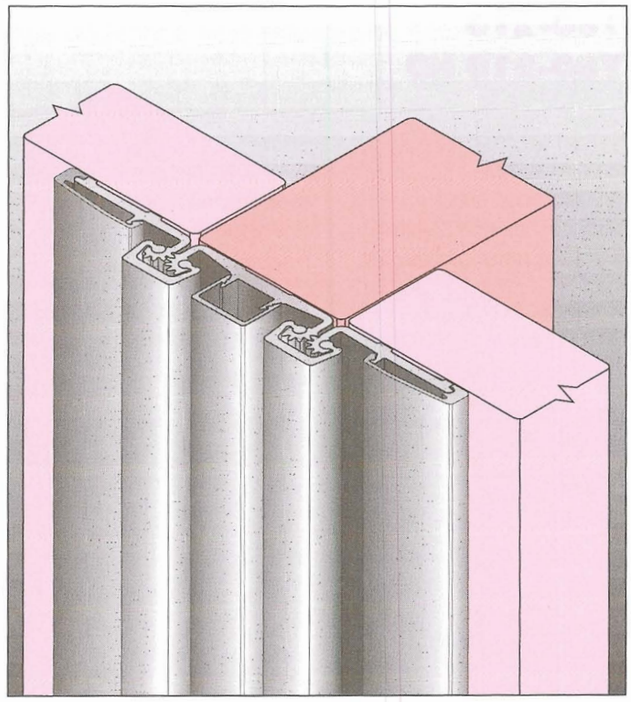

90° OPENING

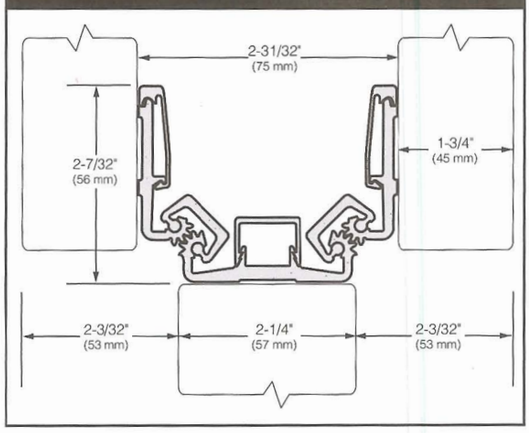

0° OPENING

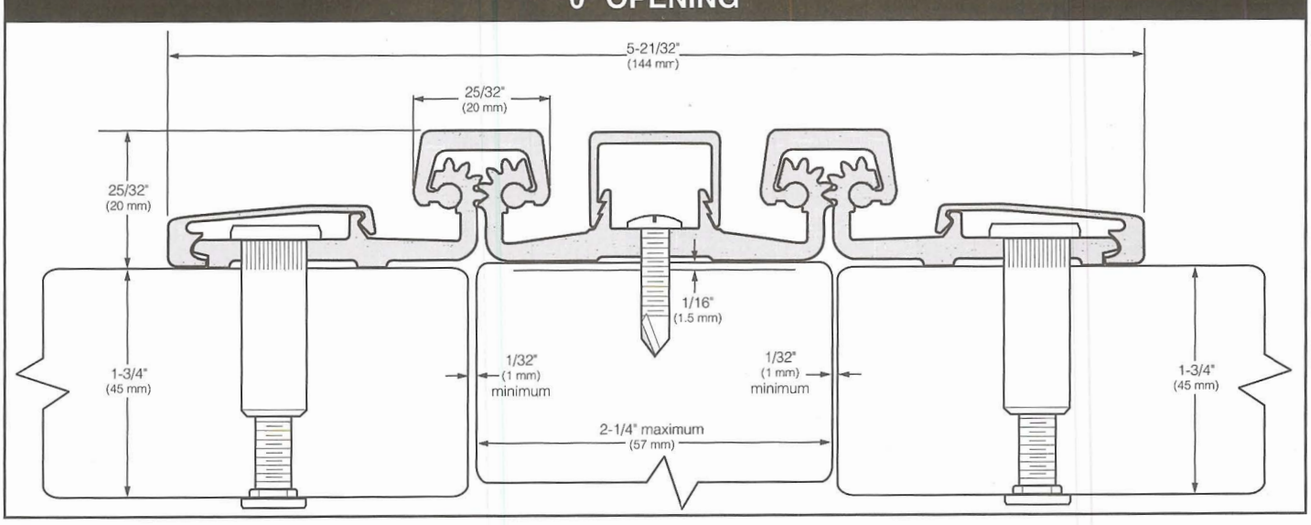

PH. 1-800-325-9995 or 1-314-772-4400 • Fax 1-800-782-0149 or 1-314-772-0744

rev. 7/02

"EVERYTHING HINGES ON HAGER"

Roton Full Surface

Door of any Material • Heavy Duty

Heavy Duty for high frequency center hung doors or heavy medium frequency center hung doors. To determine weight factors for Standard or Heavy Duty frequency doors, see section "Checking the load" on page C9.

780-300 HD

- CLEARANCE: None required. 3/4" (19 mm) minimum inset.
- FASTENERS: Dril-Kwick® screws
- LENGTH OPTIONS: Standard and Custom
- DOOR REINFORCEMENT: None required to 200 lbs. Use 16 gauge channel at higher weight.
- FRAME REINFORCEMENT: None required to 200 lbs. Use 16 gauge channel at higher weight.
- SPECIAL FEATURES: For center hung door application.

Roton model number	Length		Screw Count	
	Inches	Centimeters	# for door	# for jamb
780-300HD	79	200.7	14	14
780-300HD	83	210.8	14	14
780-300HD	85	215.9	14	14
780-300HD	95	241.3	16	16
780-300HD	119	302.3	20	20

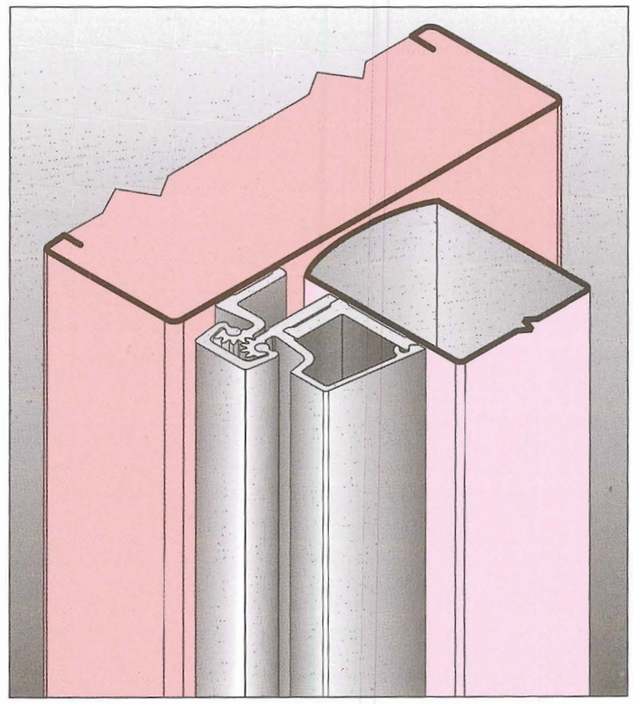

0° OPENING

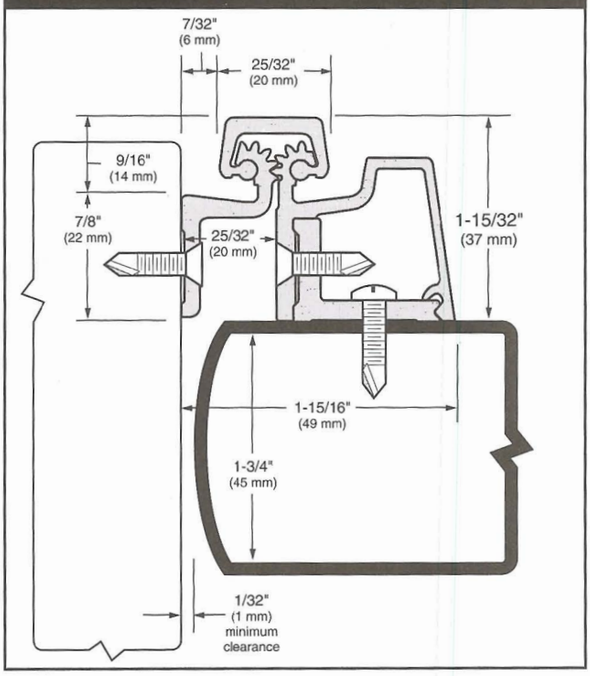

90° OPENING

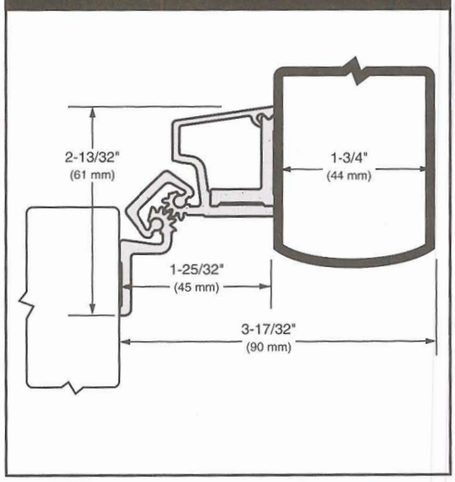

180° OPENING

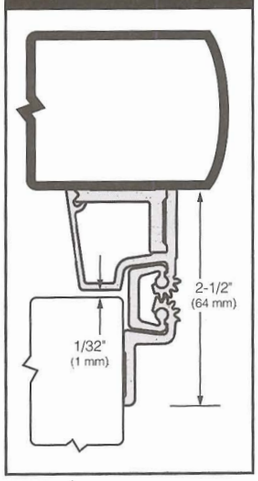

Notes

PH. 1-800-325-9995 or 1-314-772-4400 • Fax 1-800-782-0149 or 1-314-772-0744

rev. 7/02

"EVERYTHING HINGES ON HAGER"