ARCHITECTURAL HINGES ➤ TRIM & AUXILIARY HARDWARE ➤ THRESHOLD & WEATHERSTRIPPING ➤ RESIDENTIAL HARDWARE ➤ SLIDING DOOR HARDWARE ➤ ROTON CONTINUOUS GEARED HINGES ➤ STAINLESS STEEL CONTINUOUS HINGES ➤

HAGER®
COMPANIES
ST. LOUIS, MISSOURI

TRIM & AUXILIARY PULLS

Hager Pulls

Cast Pull

Meets ANSI A156.6 for J401 Pulls

P8N

1 5/8" (41 mm) Oval Base
2 1/4" (57 mm) Projection
1 9/16" (40 mm) Clearance
8 3/4" (222 mm) Length
7 1/8" (181 mm) Base Centers

Material: Silicon Bronze
Finishes: US3, US4, U26, US26D only.

Item No.	Length CTC		Fasteners (with finish washers)	Quantity	
	Inches	mm		Box	Case
P8N	7-1/8	181	3/8 FHMS	1 each	12 each

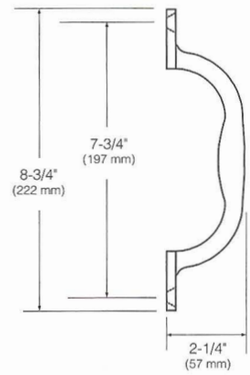

Security torx screw option shown
(phillips head screws standard)

Security Pull

Meets ANSI A156.6 for J401 Pulls

P4E

1" (25 mm) Diameter Base
2 1/4" (57 mm) Projection
1 1/4" (32 mm) Clearance
7" (178 mm) Length
6" (152 mm) Base Centers

Material: Stainless Steel
Finishes: US32D
Handicap: 2 1/2" (63 mm) clearance available on special order.
Prefix "H" to number (i.e., HP4E).

For use with security hollow metal doors. Requires reinforcing plate with an access plate with torx screws for door edge. All to be supplied by HM source.

Item No.	Length CTC		Fasteners (with finish washers)	Quantity	
	Inches	mm		Box	Case
P4E	6	152	3/8-16x1-1/4 "nyloc" hex head cap screw	1 each	12 each

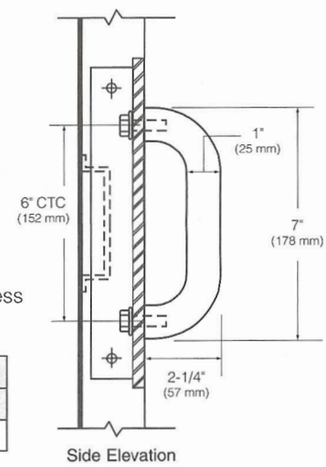

Side Elevation

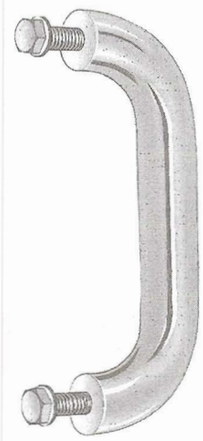

Security Pull

Meets ANSI A156.6 for J401 Pulls

T4E

1" (25 mm) Diameter Base
2 1/4" (57 mm) Projection
1 1/4" (32 mm) Clearance
7" (178 mm) Length
6" (152 mm) Base Centers

Material: Stainless Steel
Finishes: US32D
Handicap: 2 1/2" (63 mm) clearance available on special order.
Prefix "H" to number (i.e., HT4E).

Pull for use on security wood doors.

Item No.	Length CTC		Fasteners (with finish washers)	Quantity	
	Inches	mm		Box	Case
T4E	6	152	1/4-20 x 2-1/4 security torx thru bolts	1 each	12 each

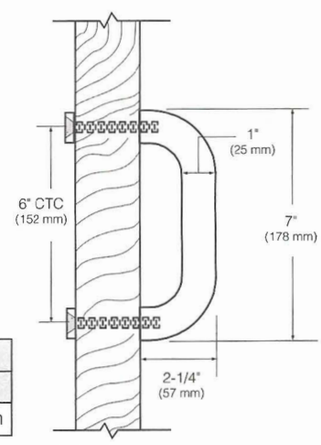

Side Elevation

Modified Half Round Wrought Door Pull

Meets ANSI A156.6 for J401 Pulls

1

1/2" x 1" (13 mm x 25 mm) Base
2" (51 mm) Projection
1 1/2" (38 mm) Clearance

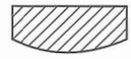

Material: Aluminum, Brass, Bronze, or Stainless Steel
Finishes: All standard, see page F3.
Handicap: 2 1/2" (63 mm) clearance available on special order. Prefix "H" to number (i.e., H1E).
Available with standard base centers (CTC).
This pull unit may be combined with a plate to make a pull plate.
(See page F5 and 19Y for pull plate specifications.)

Item No.	Length CTC*		Fasteners (with finish washers)	Quantity	
	Inches	mm		Box	Case
1E	6	152	1/4 x 20 thru bolts	1 each	12 each
1G	8	203	1/4 x 20 thru bolts	1 each	12 each
1J	10	254	1/4 x 20 thru bolts	1 each	12 each
1L	12	305	1/4 x 20 thru bolts	1 each	12 each

* Other centers on special order.

Rectangular Wrought Door Pull

Meets ANSI A156.6 for J401 Pulls

2

3/8" x 11/4" (10 mm x 32 mm) Base
2" (51 mm) Projection
1 5/8" (41 mm) Clearance

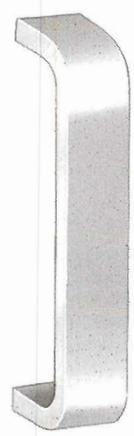

Material: Aluminum, Brass, Bronze, or Stainless Steel
Finishes: All standard, see page F3.
Handicap: 2 1/2" (63 mm) clearance available on special order. Prefix "H" to number (i.e., H2E).
Available with standard base centers (CTC).
This pull unit may be combined with a plate to make a pull plate.
(See page F5 and 19Y for pull plate specifications.)

Item No.	Length CTC*		Fasteners (with finish washers)	Quantity	
	Inches	mm		Box	Case
2E	6	152	1/4 x 20 thru bolts	1 each	12 each
2G	8	203	1/4 x 20 thru bolts	1 each	12 each
2J	10	254	1/4 x 20 thru bolts	1 each	12 each
2L	12	305	1/4 x 20 thru bolts	1 each	12 each

* Other centers on special order.

Hager Pulls

Round Wrought Door Pulls

Meets ANSI A156.6 for J401 Pulls

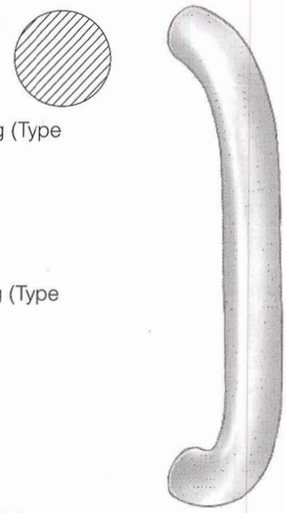

3

3/4" (19 mm) Diameter Base
2 1/4" (57 mm) Projection
1 1/2" (38 mm) Clearance

Note: To order two (2) #3 pulls with back to back concealed spanner mounting (Type 7, p. F4) as one set for a single door.
Specify: #13 plus Base Centers (i.e., 13E).

4

1" (25 mm) Diameter Base
2 3/4" (70 mm) Projection
1 3/4" (45 mm) Clearance

Note: To order two (2) #4 pulls with back to back concealed spanner mounting (Type 7, p. 4Fas one set for a single door.
Specify: #14 plus Base Centers (i.e., 14G).

5

5/8" (16 mm) Diameter Base
2 1/4" (57 mm) Projection
1 1/2" (38 mm) Clearance

Note: Back to back mount not available.

Material: Aluminum, Brass, Bronze, or Stainless Steel
Finishes: All standard, see page F3.
Handicap: 2 1/2" (63 mm) clearance available on special order. Prefix "H" to number (i.e., H3E).
Available with standard base centers (CTC).
This pull unit may be combined with a plate to make a pull plate. (See page F5 and 19Y for pull plate specifications.)
Note: When above pulls are used with tempered glass doors, furnish glass thickness and hole size.

Item No.	Length CTC*		Fasteners (with finish washers)	Quantity	
	Inches	mm		Box	Case
3E	6	152	1/4 x 20 thru bolts	1 each	12 each
3G	8	203	1/4 x 20 thru bolts	1 each	12 each
3J	10	254	1/4 x 20 thru bolts	1 each	12 each
3L	12	305	1/4 x 20 thru bolts	1 each	12 each
4G	8	203	1/4 x 20 thru bolts	1 each	12 each
4J	10	254	1/4 x 20 thru bolts	1 each	12 each
4L	12	305	1/4 x 20 thru bolts	1 each	12 each
5D	5-1/2	140	1/4 x 20 thru bolts	1 each	12 each

* Other centers on special order.

Cast Pull

Meets ANSI A156.6 for J401 Pulls

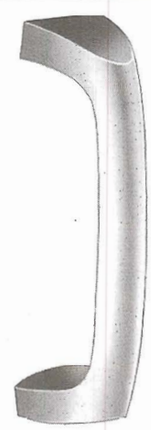

5N

5/8" x 13/16" (16 mm x 30.2 mm) Base
1 15/16" (49 mm) Projection
1 7/16" (37 mm) Clearance
6 1/8" (156 mm) Length
5 1/2" (140 mm) Base Centers

Material: Cast Aluminum, Brass, Bronze, or Stainless Steel
Finishes: All standard, see page F3.
This pull unit may be combined with a plate to make a pull plate.
(See page F5 and 19Y for pull plate specifications.)

Item No.	Length CTC*		Fasteners (with finish washers)	Quantity	
	Inches	mm		Box	Case
5N	5-1/2	140	1/4 x 20 thru bolts	1 each	12 each

Hager Pulls

Cast Pull
Meets ANSI A156.6 for J401 Pulls

6N
1" (25 mm) Diameter Base
1 7/8" (48 mm) Projection
1 3/8" (35 mm) Clearance
6 1/2" (165 mm) Length
5 1/2" (140 mm) Base Centers

Material: Cast Aluminum, Brass, Bronze, or Stainless Steel
Finishes: All standard, see page F3.
This pull unit may be combined with a plate to make a pull plate.
(See page F5 and 19Y for pull plate specifications.)

Item No.	Length CTC*		Fasteners (with finish washers)	Quantity	
	Inches	mm		Box	Case
6N	5-1/2	140	1/4 x 20 thru bolts	1 each	12 each

Cast Pull
Meets ANSI A156.6 for J401 Pulls

7N
2" (51 mm) Diameter Base
1 7/8" (48 mm) Projection
1 3/8" (35 mm) Clearance
7 1/2" (191 mm) Length
5 1/2" (140 mm) Base Centers

Material: Cast Aluminum, Brass, or Bronze
Finishes: All standard, see page F3.
This pull unit may be combined with a plate to make a pull plate.
(See page F5 and 19Y for pull plate specifications.)

Item No.	Length CTC*		Fasteners (with finish washers)	Quantity	
	Inches	mm		Box	Case
7N	5-1/2	140	1/4 x 20 thru bolts	1 each	12 each

8N
Same as 7N except with surface screw mounting.

Item No.	Length CTC*		Fasteners (with finish washers)	Quantity	
	Inches	mm		Box	Case
8N	5-1/2	140	#8 OH tapping screws	1 each	12 each

Oval Wrought Door Pull
Meets ANSI A156.6 for J401 Pulls

9
3/4" (19 mm) Modified Oval
2" (51 mm) Projection
1 1/2" (38 mm) Clearance

Material: Aluminum, Brass, Bronze, or Stainless Steel
Finishes: All standard, see page F3.
Handicap: 2 1/2" (63 mm) clearance available on special order. Prefix "H" to number (i.e., H9E).
Available with standard base centers (CTC).
This pull unit may be combined with a plate to make a pull plate.
(See page F5 and 19Y for pull plate specifications.)

Item No.	Length CTC*		Fasteners (with finish washers)	Quantity	
	Inches	mm		Box	Case
9E	6	152	1/4 x 20 thru bolts	1 each	12 each
9G	8	203	1/4 x 20 thru bolts	1 each	12 each
9J	10	254	1/4 x 20 thru bolts	1 each	12 each
9L	12	305	1/4 x 20 thru bolts	1 each	12 each

* Other centers on special order.

Hager Pulls

Round

Meets ANSI A156.6 for J401 Pulls

10

1 1/4" (32 mm) Diameter Base
3" (76 mm) Projection
1 3/4" (44 mm) Clearance

Note: To order two (2) #10 pulls with back to back concealed spanner mounting (Type 7, p. F4) as one set for a single door.
Specify: #20 plus Base Centers (i.e., 20L).

Material: Aluminum, Brass, Bronze, or Stainless Steel
Finishes: All standard, see page F3.
Handicap: 2 1/2" (63 mm) clearance available on special order. Prefix "H" to number (i.e., H3E). Available with standard base centers (CTC).
This pull unit may be combined with a plate to make a pull plate. (See page F5 and 19Y for pull plate specifications.)
Note: When above pulls are used with tempered glass doors, furnish glass thickness and hole size.

Item No.	Length CTC*		Fasteners (with finish washers)	Quantity	
	Inches	mm		Box	Case
10L	12	305	1/4 x 20 thru bolts	1 each	12 each
10Q	18	457	1/4 x 20 thru bolts	——	4 each

* Other centers on special order.

Round Offset Pull

Meets ANSI A156.6 for J402 Offset Pulls

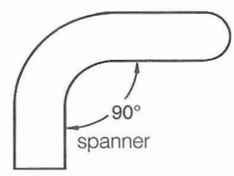

90° Standard Offset

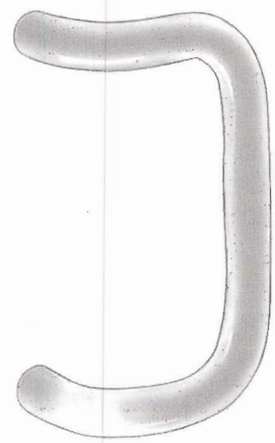

11

3/4" (19 mm) Diameter Base
2 1/2" (64 mm) Projection
2 1/2" (64 mm) Standard Offset

Note: To order two (2) #11 pulls with back to back concealed mounting (Type 7, p. F4) as one set for a single door.
Specify: #21 plus Base Centers (i.e., 21G).

12

1" (25 mm) Diameter Base
2 3/4" (70 mm) Projection
3" (76 mm) Standard Offset

Note: To order two (2) #12 pulls with back to back concealed spanner mounting (Type 7, p. F4) as one set for a single door.
Specify: #22 plus Base Centers (i.e., 22G).

Item No.	Size		Fasteners (with finish washers)	Quantity	
	Inches	mm		Box	Case
11E	6	152	5/16 x 18 thru bolts	——	2 each
11G	8	203	5/16 x 18 thru bolts	——	2 each
11J	10	254	5/16 x 18 thru bolts	——	2 each
11L	12	305	5/16 x 18 thru bolts	——	2 each
12G	8	203	5/16 x 18 thru bolts	——	2 each
12J	10	254	5/16 x 18 thru bolts	——	2 each
12L	12	305	5/16 x 18 thru bolts	——	2 each

* Other centers on special order.

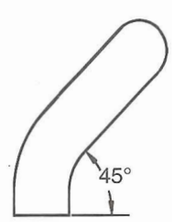

"X" Option, 45° Offset May Be Ordered by Prefixing Product Number with "X" (i.e., X11G)

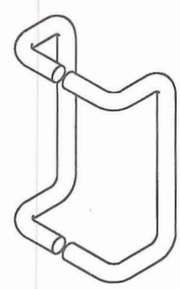

Back to Back Mounting of Two Units as One Set (i.e., 21G)

"THE FIRST FAMILY OF SUPERIOR HARDWARE"

Trim & Auxiliary

Flush Cup Pull

Meets ANSI A156.6 for J403 Flush Pulls

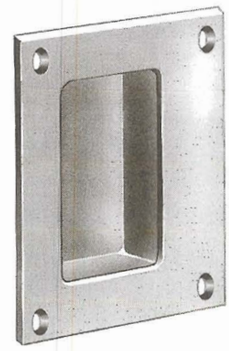

15N

3 1/2 x 5" (89 mm x 127 mm) Face
1/8" (3.2 mm) Projection
1 3/4 x 3 1/16" (44 mm x 78 mm) Opening
1 3/16" (21 mm) Clearance in Cup

Note: To order two (2) #15N pulls with back to back 6-32 sex bolts mounting (Type 6, p. F4) as one set for a single door, **specify:** #25N.

15C

Same as 15N except Stainless Steel only with cup welded to face plate.

Note: To order two (2) #15C pulls with back to back 6-32 sex bolts mounting (Typ 6, p. F4) as one set for a single door.
Specify: #25C.

15P

Same as 15N except Stainless Steel only with cup welded to face plate and welded studs for security torx through bolt mounting.

Note: To order two (2) #15P pulls with back to back 6-32 sex bolts mounting (Typ 6, p. F4) as one set for a single door.
Specify: #25B.

15S

Same as 15N except with concealed mounting by screws within the recessed cup (similar to 16N or17N).

Material: Aluminum, Brass, Bronze, or Stainless Steel
Finishes: All standard, see page F3.

Item No.	Face Size		Fasteners (with finish washers)	Quantity	
	Inches	mm		Box	Case
15N	3-1/2 x 5	89 x 127	#6 OH tapping screws	2 each	20 each

Security Finger Pull

Meets ANSI A156.6 for J403 Flush Pull

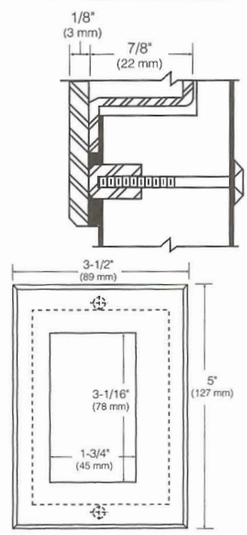

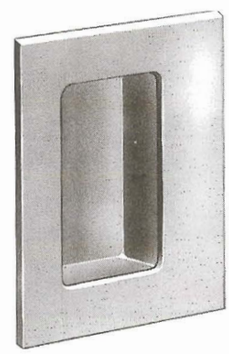

15P

3 1/2" x 5" (89 mm x 127 mm) Face
1/8" (3.2 mm) Projection
1 3/4" x 3 1/16" (44 mm x 78 mm) Opening
3/4" (19 mm) Clearance in Cup

Note: To order two (2) #15P pulls with back to back as one set for a single door. Specify: #25B.
Material: Stainless Steel
Finishes: US32D
Cup and threaded studs are welded to face plate.

Item No.	Face Size		Fasteners (with finish washers)	Quantity	
	Inches	mm		Box	Case
15P	3-1/2 x 5	89 x 127	6-32 security torx thru bolts	2 each	20 each

Flush Cup Pull

Meets ANSI A156.6 for J403 Flush Pulls

16N

1 15/16 x 3" (49 mm x 76 mm) Face
1/8" (3.2 mm) Projection
1 5/8 x 2 11/16" (41 mm x 68 mm) Base
5/8" (16 mm) Clearance in Cup

Material: Cast Brass
Finishes: US3, US10, US10B, US26, US26D only.

Item No.	Face Size		Fasteners (with finish washers)	Quantity	
	Inches	mm		Box	Case
16N	1-15/16 x 3	49 x 76	#6 OH tapping screws	2 each	20 each

Hager Pulls

Finger Pull Plate

Meets ANSI A156.6 for combination J301 Pull Plate and J403 Flush Pulls

16R

4" x 16" (102 mm x 406 mm) Plate Size
.050" (1.3 mm) Gauge
1 3/4 x 3 1/16" (44 x 78 mm) Opening
13/16" (21 mm) Clearance in Cup

Material: Aluminum, Brass, Bronze, or Stainless Steel
Finishes: All standard, see page F3.

Item No.	Face Size		Fasteners (with finish washers)	Quantity	
	Inches	mm		Box	Case
16R	4 x 16	102 x 406	#6 OH tapping screws	2 each	20 each

Partial View

Flush Cup Pull

Meets ANSI A156.6 for J403 Flush Pulls

17N

2 1/2 x 4" (64 mm x 102 mm) Face
1/8" (3.2 mm) Projection
2 1/4 x 33/4" (57 mm x 95 mm) Base
3/4" (19 mm) Clearance in Cup

Material: Cast Brass
Finishes: US3, US10, US10B, US26, US26D only.

Item No.	Face Size		Fasteners (with finish washers)	Quantity	
	Inches	mm		Box	Case
17N	2-1/2 x 4	64 x 102	#6 OH tapping screws	2 each	20 each

Cast Pull

Meets ANSI A156.6 for J401 Pulls

20N

1 1/2" (38 mm) Diameter Base
3 1/4" (83 mm) Projection
9" (229 mm) Length
5 3/16" (132 mm) Base Centers

Material: Cast Brass
Finishes: All standard,see page F3.
(See page F5 and 19Y for pull plate specifications.)

Item No.	Size		Fasteners (with finish washers)	Quantity	
	Inches	mm		Box	Case
20N	5-3/16	132	1/4 x 20 thru bolts	1 each	12 each

19N

Same as 20N except with surface screw mounting.

Item No.	Size		Fasteners (with finish washers)	Quantity	
	Inches	mm		Box	Case
19N	5-3/16	132	#8 OH tapping screws	1 each	12 each

Hager Pulls

Edge Pull for Sliding Doors

Meets ANSI A156.14 for D2801

22N

1" x 4 1/4" x 7/16" (25 mm x 108 mm x 11 mm) Size
2 3/4" (70 mm) Extension of Finger Piece

Material: Solid Brass
Finish US3, and US26D.

Fasteners	Quantity	
	Bag	Case
#6 x 17/2" OPHW	1 each	10 each

Round Offset Pull

Meets ANSI A156.6 for J402 Offset Pulls

23

1 1/4" (32 mm) Diameter Base
3" (76 mm) Projection
3 3/4" (96 mm) Standard Offset

Note: To order two (2) #23 pulls with back to back concealed spanner mounting (Type 7, p. F4) as one set for a single door.
Specify: #24 plus Base Centers (i.e., 24Q).

Material: Cast Aluminum, Brass, Bronze, or Stainless Steel
Finishes: All standard, see page F3.
Handicap: 2 1/2" clearance available on special order. Prefix "H" to number (i.e., H11E).
Available with standard base centers (CTC).
Note: When above pulls are used with tempered glass doors, furnish glass thickness and hole size.

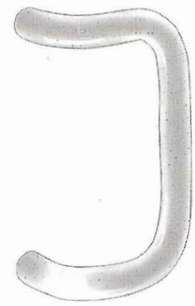

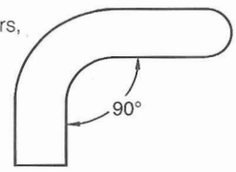

90° Standard Offset

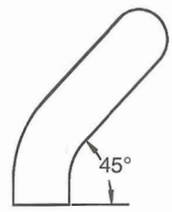

"X" Option, 45° Offset May Be Ordered by Prefixing Product Number with "X" (i.e., X11G)

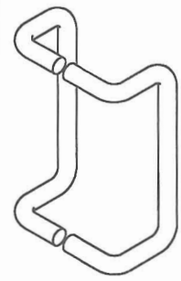

Back to Back Mounting of Two Units as One Set (i.e., 21G)

Item No.	Size		Fasteners (with finish washers)	Quantity	
	Inches	mm		Box	Case
23Q	18	457	5/16 x 18 thru bolts	——	2 each

* Other centers on special order.

Security Finger Pull/Push Plate Set

Meets ANSI A156.6 for combination J301 Push Plate and J403 Flush Pull

25P

4" x 16" (102 mm x 406 mm) Plate
1/8" (3.2 mm) Projection
1 3/4" x 3 1/16" (44 mm x 78 mm) Opening
3/4" (19 mm) Clearance in Cup

Material: Stainless Steel
Finishes: US32D
Packed 2 plates (1 set) per box.

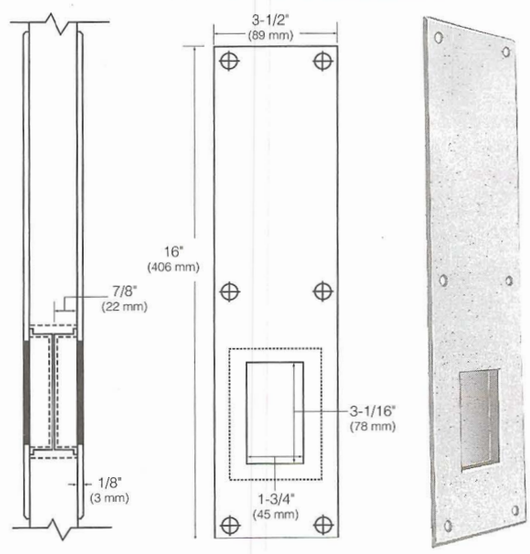

Item No.	Plate Size		Fasteners (with blank head sex nuts)	Quantity	
	Inches	mm		Box	Case
25P	4 x 16	102 x 406	8-32 security FHMS	1 set	10 sets

Hager Pulls

Security Finger Pull
Meets ANSI A156.6 for J403 Flush Pull

26N
4" x 5" (102 mm x 127 mm) Base
1/8" (3.2 mm) Projection
1 1/2" x 3" (38 mm x 76 mm) Opening
1 3/16" (21 mm) Clearance in Cup

Material: Brass, Stainless Steel
Finishes: US4, US26D, US32D
Cup brazed or welded to face plate.

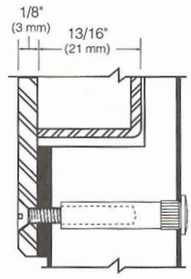

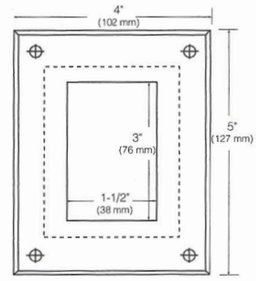

Item No.	Face Size		Fasteners (with blank head sex nuts)	Quantity	
	Inches	mm		Box	Case
26N	4 x 5	102 x 127	1/4-20 security torx FHMS	2 each	20 each

Flush Cup Pull
Meets ANSI A156.6 for J403 Flush Pull

27N
5.0" x 5.0" (127 mm x 127 mm) Face
5/16" (7.9 mm) Projection
4 3/8" wide x 3 3/4" high (111 mm x 96 mm) Base
3/4" (19 mm) Clearance in Cup

Material: Stainless Steel
Finishes: US32D Only
Cup welded to face plate.
Note: Not available for back-to-back mounting

ADA Compliant.

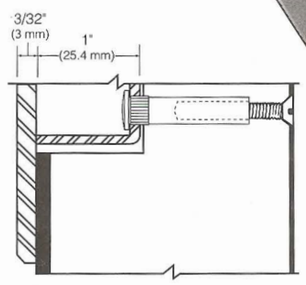

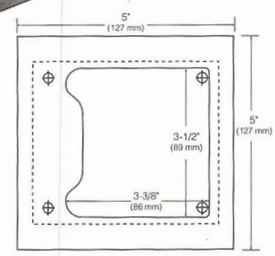

Item No.	Face Size		Fasteners (with blank head sex nuts)	Quantity	
	Inches	mm		Box	Case
27N	5 x 5	127 x 127	5/8-10-24 security torx	2 each	20 each

Flush Cup Pull
Meets ANSI A156.6 for J403 Flush Pull

27P
5.0" x 5.0" (127 mm x 127 mm) Face
5/16" (7.9 mm) Projection
4 3/8" wide x 3 3/4" high (111 mm x 96 mm) Base
3/4" (19 mm) Clearance in Cup

Material: Stainless Steel
Finishes: US32D Only
Cup welded to face plate.
Note: Not available for back-to-back mounting

ADA Compliant.

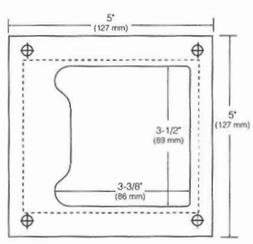

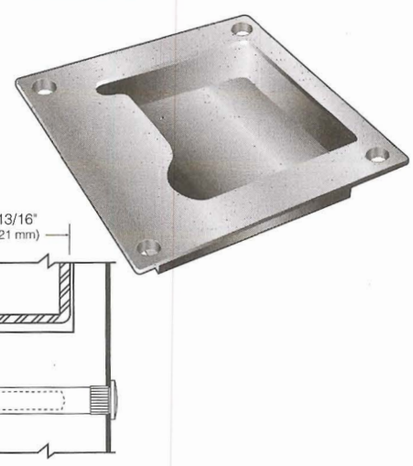

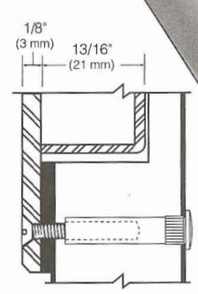

Item No.	Face Size		Fasteners (with blank head sex nuts)	Quantity	
	Inches	mm		Box	Case
27P	5 x 5	127 x 127	1/4-20 security torx	2 each	20 each

Hager Pulls

HAGER COMPANIES

Pull Plate Series

Pull plate series 30, 40, and 50 meet ANSI A156.6 for J405 Pull Plate
Pull plate series 80, 90, and 100 meet ANSI A156.6 for J407 Pull Plate
Pull plate 33E meets ANSI A156.6 for Standard Pull Plate

Standard Sizes: 3" x 12" (76 mm x 305 mm), 3 1/2" x 15" (89 mm x 381 mm), 4" x 16" (102 mm x 406 mm), 6" x 16"* (152 mm x 406 mm), 8" x 16"* (203 mm x 406 mm)
***(size not available for 50 and A50 series)**

Material: Aluminum, Brass, Bronze, or Stainless Steel
Finishes: All standard, see page F3.
Handicap: 2 1/2" (63 mm) clearance available on speciaL orders for pull plates except with 5N or 6N pulls. Prefix "H" to pull plate number (i.e., H33E).
Options: Pull plates may be ordered cut for cylinder (CFC) or engraved "PULL" (See page 19Y for standard locations).
Order: Provide pull plate number, plate size, finish,and options, if any (i.e., 31E – 3 1/2 x 15" – US3 – CFC).
Pull plates are ordered by combining a push plate and a door pull using the numbering system below.
Pull plates can be ordered using most of the push plates shown on pages 16Y and 17Y with any of the pulls shown on pages 7Y through 9Y.

Fasteners (with finish washers)		Quantity	
Door Pull	Push Plate	Box	Case
#1/4" x 20 thru bolts	#6 x 5/8 OH tapping screws	1 each	10 each

Square Corner

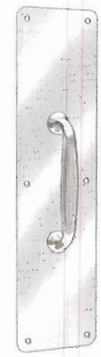
Round Corner

Rounded

.050 Pull Plate Number			.062 Pull Plate Number			1/8" Pull Plate Number			
SQUARE CORNERS	ROUND CORNERS	ROUNDED	SQUARE CORNERS	ROUND CORNERS	ROUNDED	SQUARE CORNERS	ROUND CORNERS	ROUNDED	PULL
31E	41E	51E	A31E	A41E	A51E	81E	91E	101E	1E
31G	41G	51G	A31G	A41G	A51G	81G	91G	101G	1G
31J	41J	51J	A31J	A41J	A51J	81J	91J	101J	1J
31L	41L	51L	A31L	A41L	A51L	81L	91L	101L	1L
32E	42E	52E	A32E	A42E	A52E	82E	92E	102E	2E
32G	42G	52G	A32G	A42G	A52G	82G	92G	102G	2G
32J	42J	52J	A32J	A42J	A52J	82J	92J	102J	2J
32L	42L	52L	A32L	A42L	A52L	82L	92L	102L	2L
33E	43E	53E	A33E	A43E	A53E	83E	93E	103E	3E
33G	43G	53G	A33G	A43G	A53G	83G	93G	103G	3G
33J	43J	53J	A33J	A43J	A53J	83J	93J	103J	3J
33L	43L	53L	A33L	A43L	A53L	83L	93L	103L	3L
34G	44G	54G	A34G	A44G	A54G	84G	94G	104G	4G
34J	44J	54J	A34J	A44J	A54J	84J	94J	104J	4J
34L	44L	54L	A34L	A44L	A54L	84L	94L	104L	4L
35D	45D	55D	A35D	A45D	A55D	85D	95D	105D	5D
35N	45N	55N	A35N	A45N	A55N	85N	95N	105N	5N
36N	46N	56N	A36N	A46N	A56N	86N	96N	106N	6N
39E	49E	59E	A39E	A49E	A59E	89E	99E	109E	9E
39G	49G	59G	A39G	A49G	A59G	89G	99G	109G	9G
39J	49J	59J	A39J	A49J	A59J	89J	99J	109J	9J
39L	49L	59L	A39L	A49L	A59L	89L	99L	109L	9L

NOTE: To order Pull Plates other than those listed above; give complete details (i.e., plate style, size; Pull Number; finish and other specifications.)

Hager Pulls

Plate with Lip

Plate with Lip – Not Beveled
Meets ANSI A156.6 for J303 Plate

120L

3 1/2" x 16" (89 mm x 406 mm) Plate
1 1/8" (29 mm) Lip Projection
Material: 1/8" (3.2 mm) gauge Aluminum, Brass, Bronze, or Stainless Steel
Finishes: All standard, see page F3.

Plate Size			Fasteners (tapping screws)	Quantity	
Item No.	Inches	mm		Box	Case
120L	3-1/2 x 16	89 x 406	#6 x 5/8 oval undercut head	2 each	20 each

Cylinder Pull – Attached by Lock Cylinder

121L

2" x 3 3/4" (51 mm x 95 mm) Plate
1 1/8" (29 mm) Lip Projection
1 1/4" (32 mm) Diameter Cylinder Cutout
Material: 1/8" (3.2 mm) gauge Aluminum, Brass, Bronze, or Stainless Steel
Finishes: All standard, see page F3.
1/4-20 x 3/8" stud installed on reverse side to eliminate twisting.

Plate Size	Quantity			
Item No.	Inches	mm	Box	Case
121L	2 x 3-3/4	51 x 95	——	10 each

Security Pull/Push Plate Set

Meets ANSI A156.6 for combination J304 Push Plate and J303 Flush Pull

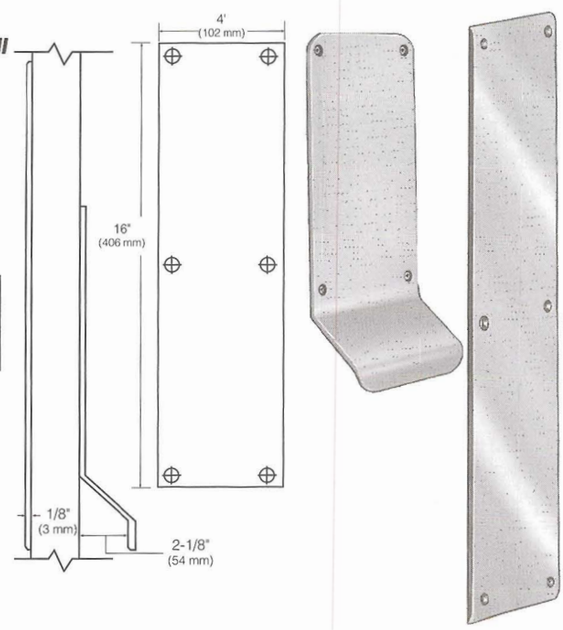

122L

4" x 16" (102 mm x 406 mm) Push Plate
1/8" (3.2 mm) Projection
4" x 9 1/4" (102 mm x 235 mm) Pull Plate
2 1/8" (54 mm) Lip Projection
Material: Stainless Steel
Finishes: US32D
Packed one push plate and one pull plate (1 set) per box.

	Plate Size		Fasteners (with blank head sex nuts)	Quantity	
Item No.	Inches	mm		Box	Case
122L	4 x 16	102 x 406	8-32 security FHMS	1 set	10 sets

PH. 1-800-325-9995 or 1-314-772-4400 • Fax 1-800-782-0149 or 1-314-772-0744

rev. 7/02

"THE FIRST FAMILY OF SUPERIOR HARDWARE"

Hager Pulls

Bent Push Bar
Meets ANSI A156.6 J501 Push Bar

125S
3/8" x 1 1/4" (10 mm x 32 mm) Bar Size
2 1/8" (54 mm) Projection
1" x 3" (25 mm x 76 mm) Base Plate

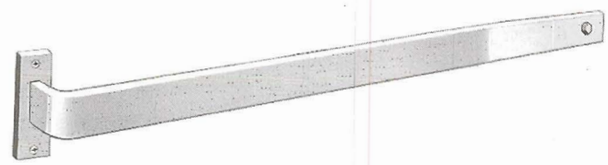

Material: Aluminum, Brass, Bronze, or Stainless Steel
Finishes: All standard, see page F3.
Options: May be ordered with thru bolts in place of surface screws. #14 FHWS available on special order.
Order: All push bar units made to order.
Specify CTC dimension of push unit and fastening method unless standard.
Specify door type (i.e., WD, HM, AL, etc…).

Fasteners	Quantity		
Hinge End	Lock End	Box	Case
#1/4' x 20 FHMS	#8 FH tapping screws	——	4 each

Push Bar
Meets ANSI A156.6 J501 Push Bar

126S
3/8" x 1 1/4" (10 mm x 32 mm) Bar Size
2 1/8" (54 mm) Projection
1" x 3" (25 mm x 76 mm) Base Plate

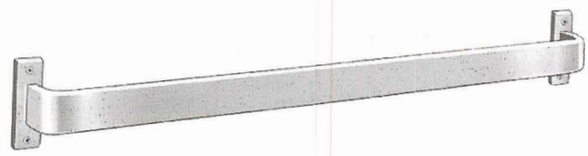

Material: Aluminum, Brass, Bronze, or Stainless Steel
Finishes: All standard, see page F3.
Options: May be ordered with 1/4" x 20 thru bolts in place of surface screws. #8-32 FHWS available on special order.
Order: All push bar units made to order.
Specify CTC dimension of push unit and fastening method unless standard.
Specify door type (i.e., WD, HM, AL, etc…).

Fasteners	Quantity		
Hinge End	Lock End	Box	Case
#8 FH tapping screws	#8 FH tapping screws	——	4 each

Push Bar
Meets ANSI A156.6 J501 Push Bar

127S
3/8" x 1 1/4" (10 mm x 32 mm) Bar Size
3/4" (19 mm) Projection
1 1/4" x 1 1/4" (32 mm x 32 mm) Base Plate

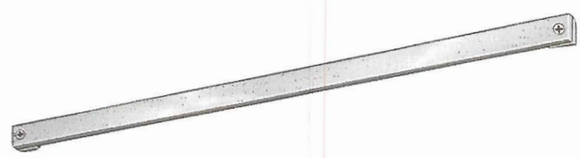

Material: Aluminum, Brass, Bronze, or Stainless Steel
Finishes: All standard, see page F3.
Options: #14 FHWS available on special order.
Order: All push bar units made to order.
Specify CTC dimension of push unit and fastening method unless standard.
Specify door type (i.e., WD, HM, AL, etc…).

Fasteners	Quantity		
Hinge End	Lock End	Box	Case
#1/4" x 20 FHMS	#1/4" x 20 FHMS	——	4 each

Hager Pulls

Wide Push Bar
Meets ANSI A156.6 J501 Push Bar

128P
3/8" x 3" (10 mm x 76 mm) Bar Size
2 1/8" (54 mm) Projection
1 1/2" x 4 1/2" (38 mm x 114 mm) Base Plate

Material: Aluminum, Brass, Bronze, or Stainless Steel
Finishes: All standard, see page F3.
Options: May be ordered with 1/4" x 20 thru bolts in place of surface screws.
#8-32 FHWS available on special order.
Order: All push bar units made to order.
Specify CTC dimension of push unit and fastening method unless standard.
Specify door type (i.e., WD, HM, AL, etc...).

Fasteners	Quantity		
Hinge End	Lock End	Box	Case
#8 FH tapping screws	#8 FH tapping screws	—	1 each

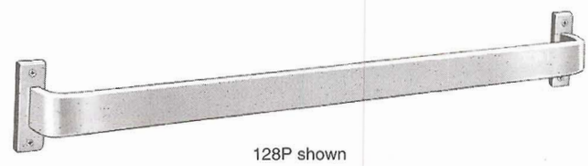
128P shown

128S
Same as 128P except without base plates.
3/8" x 3" (10 mm x 76 mm) Bar Size
2" (51 mm) Projection
3/8" x 3" (10 mm x 76 mm) Base

Fasteners	Quantity		
Hinge End	Lock End	Box	Case
#1/4" x 20 thru bolts	#1/4" x 20 thru bolts	—	1 each

Wide Push Bar
Meets ANSI A156.6 J501 Push Bar

129P
3/8" x 3" (10 mm x 76 mm) Bar Size
3/4" (19 mm) Projection
1" x 3" (25 mm x 76 mm) Base Plate

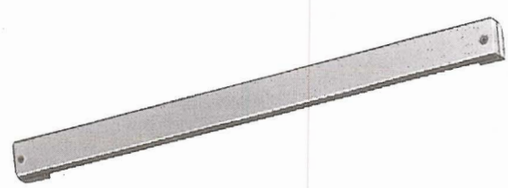

Material: Aluminum, Brass, Bronze, or Stainless Steel
Finishes: All standard, see page F3.
Options: May be ordered with thru bolts in place of surface screws.
#14 FHWS available on special order.
Order: All push bar units made to order.
Specify CTC dimension of push unit and fastening method unless standard.
Specify door type (i.e., WD, HM, AL, etc...).

Fasteners	Quantity		
Hinge End	Lock End	Box	Case
#1/4" x 20 FHMS	#1/4" x 20 FHMS	—	1 each

rev. 7/02

"THE FIRST FAMILY OF SUPERIOR HARDWARE"

Push Bar

Meets ANSI A156.6 J501 Push Bar

130S

1" (25 mm) Round Bar Stock
2 1/2" (64 mm) Projection
1" (25 mm) Diameter Base

Material: Aluminum, Brass, Bronze, or Stainless Steel
Finishes: All standard, see page F3.
Options: May be ordered with Type 5 (page F4) concealed mountings at extra charge.
Order: All push bar units made to order.
Specify CTC dimension of push unit and fastening method unless standard.

133S

Same as 130S except:

3/4" (19 mm) Round Bar Stock
2 1/4" (57 mm) Projection
3/4" (19 mm) Diameter Base

136S

Same as 130S except:

1 1/4" (32 mm) Round Bar Stock
3" (76 mm) Projection
1 1/4" (32 mm) Diameter Base

Fasteners (with finish washers)	Quantity	
	Box	Case
1/4 x 20 thru bolts	——	4 each

Push Bar

Meets ANSI A156.6 J501 Push Bar

131S

1" (25 mm) Round Bar Stock
2 5/8" (67 mm) Projection
2" (51 mm) Diameter Base

Material: Aluminum, Brass, Bronze, or Stainless Steel
Finishes: All standard, see page F3.
Options: May be ordered with Type 5 (page F4) concealed mountings at extra charge.
Order: All push bar units made to order.
Specify CTC dimension of push unit and fastening method unless standard.

134S

Same as 131S except:

3/4" (19 mm) Round Bar Stock
2 3/8" (60 mm) Projection
1 1/4" (32 mm) Diameter Base

137S

Same as 131S except:

1 1/4" (32 mm) Round Bar Stock
3 1/8" (79 mm) Projection
2" (51 mm) Diameter Base

Fasteners (with finish washers)	Quantity	
	Box	Case
1/4 x 20 thru bolts	——	4 each

Hager Pulls

Push/Pull Set
Meets ANSI A156.6 J504 Bar Sets

138P
1" (25 mm) Round Bar Stock
2 1/2" (64 mm) Projection
1" (25 mm) Diameter Base

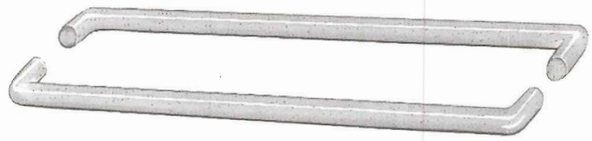

Material: Aluminum, Brass, Bronze, or Stainless Steel
Finishes: All standard, see page F3.
Order: All push/pull sets are made to order.
Specify CTC dimension of push bar and fastening method.
Bars are mounted BTB with 1/4" x 20 type 3 (page F4) concealed cone mounting.

139P
Same as 138P except:
3/4" (19 mm) Round Bar Stock
2 1/4" (57 mm) Projection
3/4" (19 mm) Diameter Base

140P
Same as 138P except:
1 1/4" (32 mm) Round Bar Stock
3" (76 mm) Projection
1 1/4" (32 mm) Diameter Base

Push/Pull Set
Meets ANSI A156.6 J504 Bar Sets

150D/V/B
3/4" (19 mm) Round Bar Stock
2 1/4" (57 mm) Projection
3/4" (19 mm) Diameter Base
8" (203 mm) Pull CTC

Front Elevation

Material: Aluminum, Brass, Bronze, or Stainless Steel
Finishes: All standard, see page F3.
Order: All push/pull sets are made to order.
Specify CTC dimension of push bar and fastening method, D/V OR B.
Fastening: The following types are available:
Standard fastening (Type D, i.e. 150D): One type 7 spanner collar connection between lock stile end of push bar and top end of pull. Two type 1 connections for other ends of push bar and pull.
Fully concealed fastening (Type V, i.e. 150V): One type 7 spanner collar connection between push bar and pull plus two type 5 connections for other ends of push bar and pull.
Tempered glass fastening (Type B, i.e. 150B): One type 7 spanner collar connection between push bar and pull. Two type 8 connections for other ends of push bar and pull plus gaskets and separate metal parts from glass.

151D/V/B
Same as 150 series except:
10" (254 mm) Pull CTC

152D/V/B
Same as 150 series except:
12" (305 mm) Pull CTC

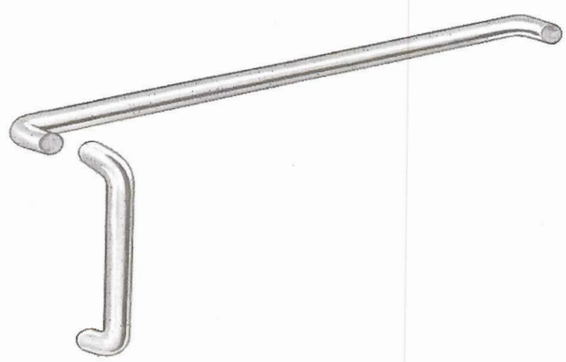

"THE FIRST FAMILY OF SUPERIOR HARDWARE"

Hager Pulls

Push/Pull Set

Meets ANSI A156.6 J504 Bar Sets

153D/V/B

1" (25 mm) Round Bar Stock
2 1/2" (64 mm) Projection
1" (25 mm) Diameter Base
10" (254 mm) Pull CTC

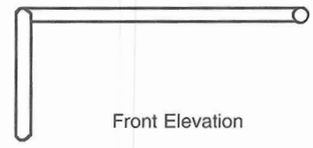

Front Elevation

Material: Aluminum, Brass, Bronze, or Stainless Steel
Finishes: All standard, see page F3.
Order: All push/pull sets are made to order.
Specify CTC dimension of push bar and fastening method D/V or B.
Fastening: The following types are available:
Standard fastening (Type D, i.e. 150D): One type 7 spanner collar connection between lock stile end of push bar and top end of pull. Two type 1 connections for other ends of push bar and pull.
Fully concealed fastening (Type V, i.e. 150V): One type 7 spanner collar connection between push bar and pull plus two type 5 connections for other ends of push bar and pull.
Tempered glass fastening (Type B, i.e. 150B): One type 7 spanner collar connection between push bar and pull. Two type 8 connections for other ends of push bar and pull plus gaskets and separate metal parts from glass.

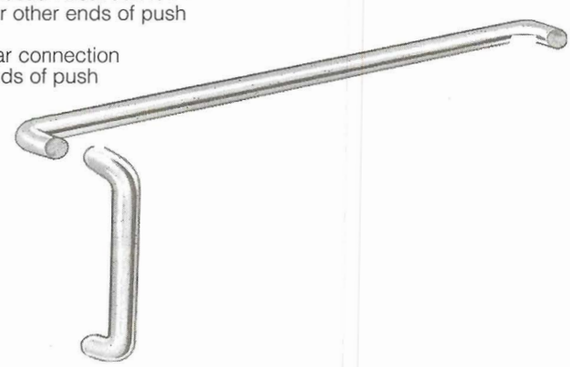

154D/V/B

Same as 153 series except:
12" (305 mm) Pull CTC

155D/V/B

Same as 153 series except:
18" (457 mm) Pull CTC

Push/Pull Set

Meets ANSI A156.6 J504 Bar Sets

156D/V/B

3/4" (19 mm) Round Bar Stock
2 1/2" (64 mm) Projection
3/4" (19 mm) Diameter Base
8" (203 mm) Pull CTC
2 1/2" (64 mm) Offset CTC

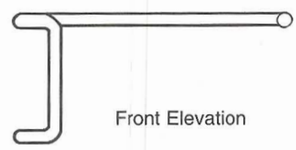

Front Elevation

Material: Aluminum, Brass, Bronze, or Stainless Steel
Finishes: All standard, see page F3.
Option: 90º offset pulls are standard. For 45º offset pull (see page 10Y), substitute "X" for first digit (i.e., X56D).
Order: All push/pull sets are made to order.
Sets are not reversible. Specify hand of door.
Specify CTC dimension of push bar and fastening method D/V or B.
Fastening: The following types are available:
Standard fastening (Type D, i.e. 150D): One type 7 spanner collar connection between lock stile end of push bar and top end of pull. Two type 1 connections for other ends of push bar and pull.
Fully concealed fastening (Type V, i.e. 150V): One type 7 spanner collar connection between push bar and pull plus two type 5 connections for other ends of push bar and pull.
Tempered glass fastening (Type B, i.e. 150B): One type 7 spanner collar connection between push bar and pull. Two type 8 connections for other ends of push bar and pull plus gaskets and separate metal parts from glass.

157D/V/B

Same as 156 series except:
10" (254 mm) Pull CTC

158D/V/B

Same as 156 series except:
12" (305 mm) Pull CTC

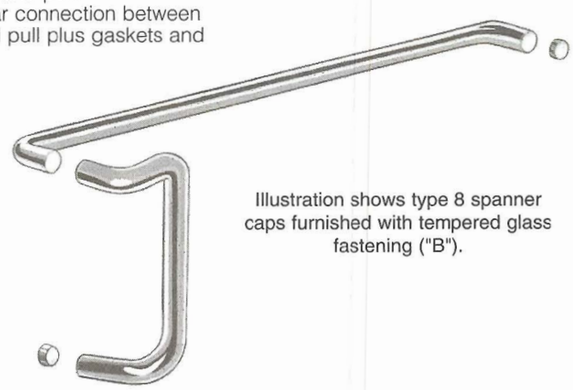

Illustration shows type 8 spanner caps furnished with tempered glass fastening ("B").

Hager Pulls

Push/Pull Set

Meets ANSI A156.6 J504 Bar Sets

159D/V/B

1" (25 mm) Round Bar Stock
2 1/2" (76 mm) Projection
1" (25 mm) Diameter Base
10" (254 mm) Pull CTC
3" (76 mm) Offset CTC

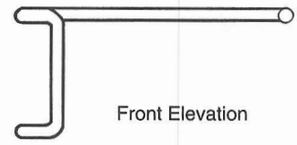

Front Elevation

Material: Aluminum, Brass, Bronze, or Stainless Steel
Finishes: All standard, see page F3.
Option: 90º offset pulls are standard. For 45º offset pull (see page 10Y), substitute "X" for first digit (i.e., X56D).
Order: All push/pull sets are made to order.
Sets are not reversible. Specify hand of door.
Specify CTC dimension of push bar and fastening method D/V or B.

Fastening: The following types are available:

Standard fastening (Type D, i.e. 150D): One type 7 spanner collar connection between lock stile end of push bar and top end of pull. Two type 1 connections for other ends of push bar and pull.

Fully concealed fastening (Type V, i.e. 150V): One type 7 spanner collar connection between push bar and pull plus two type 5 connections for other ends of push bar and pull.

Tempered glass fastening (Type B, i.e. 150B): One type 7 spanner collar connection between push bar and pull. Two type 8 connections for other ends of push bar and pull plus gaskets and separate metal parts from glass.

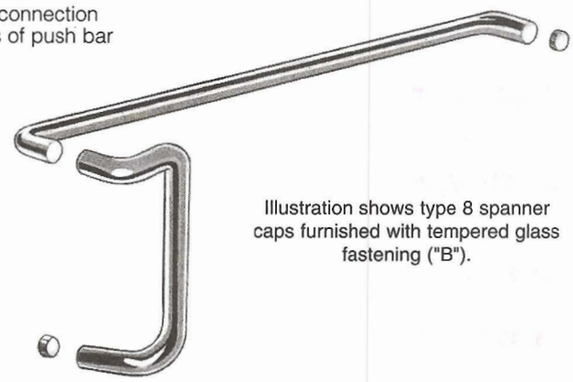

Illustration shows type 8 spanner caps furnished with tempered glass fastening ("B").

160D/V/B

Same as 159 series except:
1" (25 mm) Round Bar Stock
2 1/2" (64 mm) Projection
1" (25 mm) Diameter Base
12" (305 mm) Pull CTC
3" (76 mm) Offset CTC

161D/V/B

Same as 159 series except:
1" (25 mm) Round Bar Stock
2 1/2" (64 mm) Projection
1" (25 mm) Diameter Base
18" (457 mm) Pull CTC
3" (76 mm) Offset CTC

Push/Pull Set

Meets ANSI A156.6 J504 Bar Sets

164D/V/B

1 1/4" (32 mm) Round Bar Stock
3" (76 mm) Projection
1 1/4" (32 mm) Diameter Base
12" (305 mm) Pull CTC

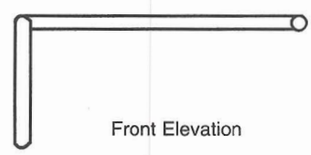

Front Elevation

Material: Aluminum, Brass, Bronze, or Stainless S eel
Finishes: All standard, see page F3.
Order: All push/pull sets are made to order.
Specify CTC dimension of push bar and fastening method D/V or B.

Fastening: The following types are available:

Standard fastening (Type D, i.e. 150D): One type 7 spanner collar connection between lock stile end of push bar and top end of pull. Two type 1 connections for other ends of push bar and pull.

Fully concealed fastening (Type V, i.e. 150V): One type 7 spanner collar connection between push bar and pull plus two type 5 connections for other ends of push bar and pull.

Tempered glass fastening (Type B, i.e. 150B): One type 7 spanner collar connection between push bar and pull. Two type 8 connections for other ends of push bar and pull plus gaskets and separate metal parts from glass.

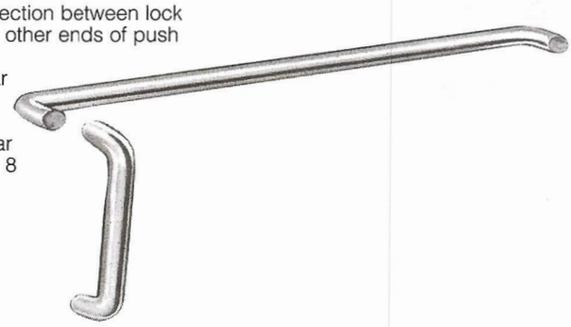

165D/V/B

Same as 164 series except:
18" (457 mm) Pull CTC

"THE FIRST FAMILY OF SUPERIOR HARDWARE"

Push/Pull Set

Meets ANSI A156.6 J504 Bar Sets

167D/V/B

1 1/4" (32 mm) Round Bar Stock
3" (76 mm) Projection
1 1/4" (32 mm) Diameter Base
18" (457 mm) Pull CTC
3 3/4" (96 mm) Offset CTC

Material: Aluminum, Brass, Bronze, or Stainless Steel
Finishes: All standard, see page F3.
Option: 90º offset pulls are standard. For 45º offset pull (see page 10Y), substitute "X" for first digit (i.e., X56D).
Order: All push/pull sets are made to order.
Sets are not reversible. Specify hand of door.
Specify CTC dimension of push bar and fastening method D/V or B.

Fastening: The following types are available:

Standard fastening (Type D, i.e. 150D): One type 7 spanner collar connection between lock stile end of push bar and top end of pull. Two type 1 connections for other ends of push bar and pull.

Fully concealed fastening (Type V, i.e. 150V): One type 7 spanner collar connection between push bar and pull plus two type 5 connections for other ends of push bar and pull.

Tempered glass fastening (Type B, i.e. 150B): One type 7 spanner collar connection between push bar and pull. Two type 8 connections for other ends of push bar and pull plus gaskets and separate metal parts from glass.

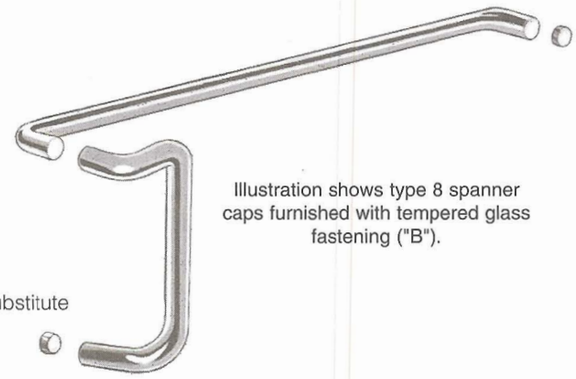

Illustration shows type 8 spanner caps furnished with tempered glass fastening ("B").

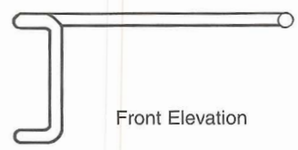

Front Elevation

Push/Pull Set

Meets ANSI A156.6 J502 Bar Sets

170D

3/8 x 1 1/4" (10 mm x 32 mm) Bar Stock
2 1/2" (64 mm) Projection of Pull Bar
3/4" (19 mm) Projection of Push Bar
1 1/4" x 1 1/4" (32 x 32 mm) Base
8" (203 mm) Horizontal Spacing CTC

Material: Aluminum, Brass, Bronze, or Stainless Steel
Finishes: All standard, see page F3.
Order: All push/pull sets are made to order.
Specify CTC dimension of push bar and fastening method unless standard.
Bars are mounted BTB with 1/4" x 20 thru bolt type 4 (page F4) mounting.

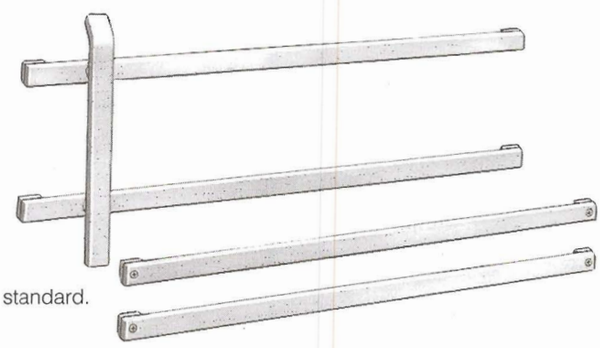

Hager Pulls

3" (76 mm) Wire Pull

Meets ANSI A156.9 for B02011

305D - 3"

5/16" (7.9 mm) Diameter of Rod
1 1/4" (32 mm) Projection
3" (76 mm) CTC

Material: Solid Brass
Finish: US3, US26, and US26D.

305D - 3-1/2"

Same as 305D except:
3 1/2" (89 mm) CTC

305D - 4"

Same as 305D except:
4" (102 mm) CTC

Fasteners	Quantity	
	Box	Case
8/32" x 1" combination truss head MS	10 each	100 each

Push/Pull Latch

For 1 3/4" (45 mm) doors.
ANSI A156.2 Closest Equivalent (Bored Latch - Series 4000 - Grade 2).

311D

1 1/2" x 4 1/2" (38 mm x 114 mm) Wide x Tall Push and Pull Levers
2 1/2" x 5" (64 mm x 127 mm) Width x Height Escutcheons
2 5/8" (67 mm) Projection
1/2" (9.5 mm) Bolt Throw (standard)
2 3/4" (70 mm) Backset (standard)/5" (127 mm) (optional)
2 3/4" x 1 1/8" (70 mm x 29 mm) Strike (ANSI A115.1, W7) - Standard
4 7/8" x 1 1/4" (124 mm x 32 mm) Strike (ANSI A115.1, W7) - Standard

Material: Brass trim with Steel mechanism.
Finishes: US26D in stock. Other finishes made to order.
Engraving Options:
A. Standard: In stock. Both levers down, one "PUSH", one "PULL".
B. Non-standard: Special order. One lever up "PUSH", one lever down "PULL".
C. Non-standard: Special order. Specify type desired, price on application.
Non-handed, with six mounting positions (as illustrated at right).
Packed one set (2 each) with fasteners, template, and installation instructions.

Quantity	
Box	Case
1 set	10 sets

311L

Same as 311D except:
For use with lead lined doors.

Optional Horizontal Mounting

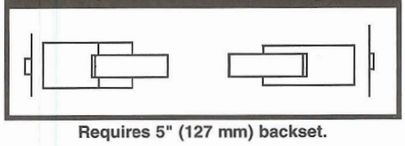

Requires 5" (127 mm) backset.

Optional Vertical Mounting

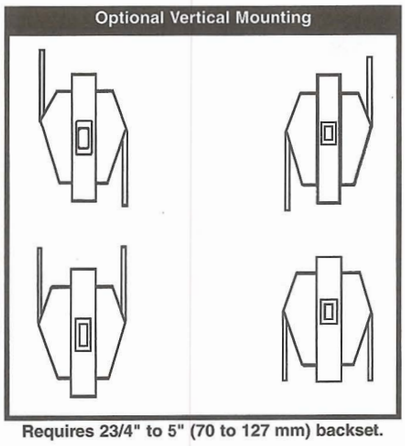

Requires 23/4" to 5" (70 to 127 mm) backset.

PH. 1-800-325-9995 or 1-314-772-4400 • Fax 1-800-782-0149 or 1-314-772-0744

rev. 7/02

"THE FIRST FAMILY OF SUPERIOR HARDWARE"

Hager Pulls

Offset Mounting Vertical Pull
910P
36" (914 mm), 72" (1829 mm)

Material: Aluminum, Brass, Bronze or Stainless Steel
Finishes: US3, US4, US10B, US15A, US26, US26D, US28 and US32D only.
Fasteners: 3/8" Diameter Bolts
Weight: 36" 13 lbs,
72" 26 lbs

Straight Mounting Vertical Pull
915P
36" (914 mm), 72" (1829 mm)

Material: Aluminum, Brass, Bronze or Stainless Steel

Finishes: US3, US4, US10B, US15A, US26, US26D, US28 and US32D only.
Fasteners: 3/8" Diameter Bolts
Weight: 36" 15 lbs,
72" 30 lbs

BTB - 910B or 915B

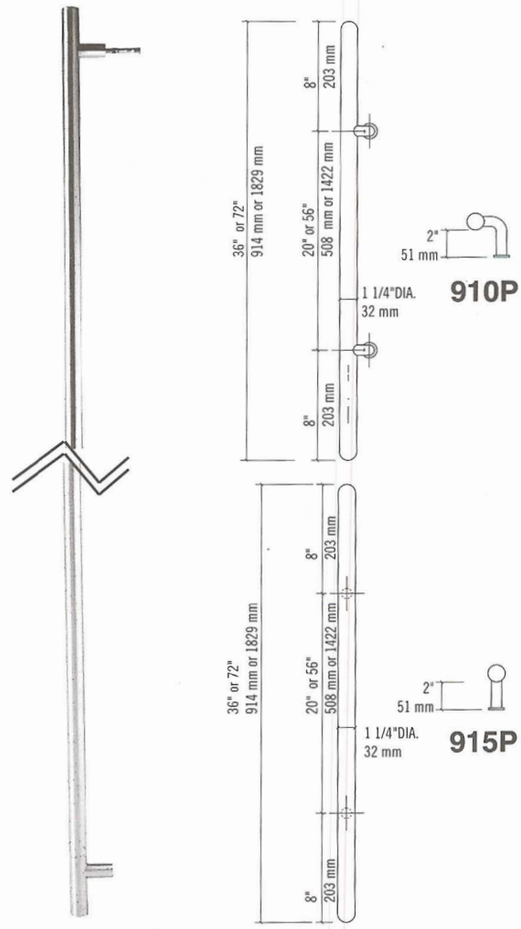

For back-to-back mounting, please use suffix "B".

Hager Pulls

C-Shaped Pull
920P

10" (254 mm),

Material: Brass/Bronze
Finishes: US3, US4, US10B, US15A, and US26D only.
Fasteners: 3/8" Diameter Bolts
Weight: 4 lbs

BTB - 920B

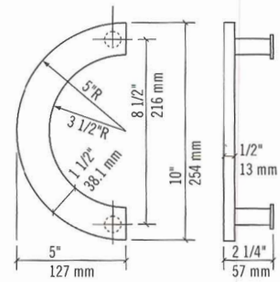

C-Shaped Pull
921P

19" (483 mm),

Material: Aluminum, Brass, Bronze or Stainless Steel
Finishes: US3, US4, US10B, US15A, US26, US26D, US28 and US32 only.
Fasteners: 3/8" Diameter Bolts
Weight: 4 lbs

BTB - 921B

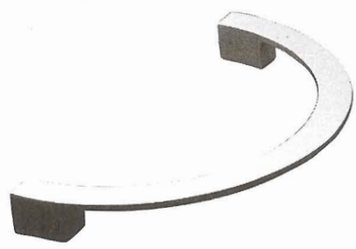

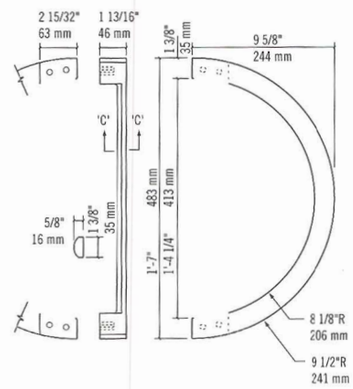

C-Shaped Pull
922P Continuous
923P Flanged

10" (254 mm), 12" (305 mm)

Material: Aluminum, Brass, Bronze or Stainless Steel
Finishes: US3, US4, US10B, US15A, US26, US26D, US28 and US32D only.
Fasteners: 3/8" Diameter Bolts
Weight: 5 lbs, 8 lbs,
3 lbs, 5 lbs (US28)
Bar Diameter: 1"

BTB - 922B or 923B

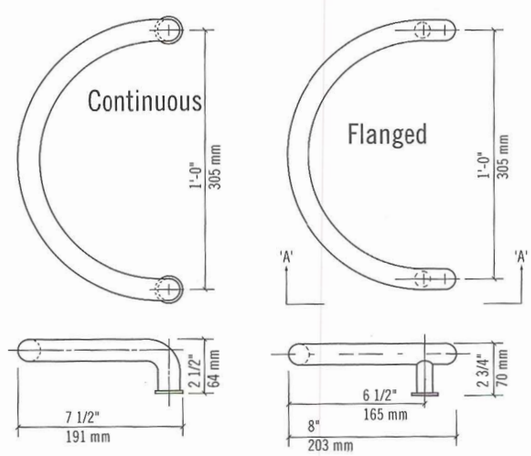

PH. 1-800-325-9995 or 1-314-772-4400 • Fax 1-800-782-0149 or 1-314-772-0744

rev. 7/02

"THE FIRST FAMILY OF SUPERIOR HARDWARE"

Hager Pulls

HAGER COMPANIES

C-Shaped Pull
924P

14" (356 mm),
Material: Aluminum, Brass, Bronze or Stainless Steel
Finishes: US3, US4, US10B, US15A, US26, US26D, and US32D only.
Fasteners: 3/8" Diameter Bolts
Weight: 7 lbs

BTB - 924B

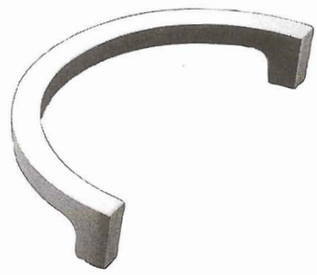

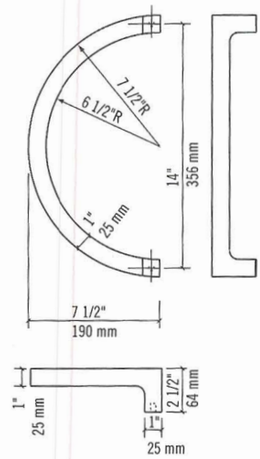

C-Shaped Pull
925P

6 1/2" (165 mm), 8 1/2" (217 mm), 12 1/2" (318 mm)
Material: Aluminum, Brass, Bronze or Stainless Steel
Finishes: US3, US4, US10B, US15A, US26, US26D, US28 and US32D only.
Fasteners: 3/8" Diameter Bolts
Weight: 5 lbs, 6 lbs, 9 lbs

BTB - 925B

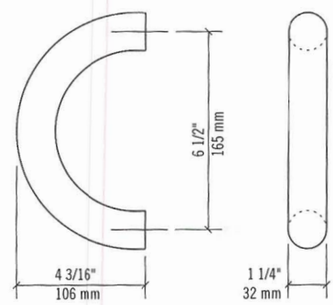

Curved Pull
926P

12" CTC (305 mm),
Material: Aluminum, Brass, Bronze or Stainless Steel
Finishes: US3, US4, US10B, US15A, US26, US26D, US28 and US32D only.
Fasteners: 3/8" Diameter Bolts
Weight: 4.45 lbs

BTB - 926B

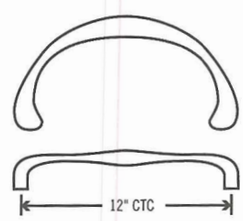

NEW PRODUCT!

Hager Pulls

Pull
930P

10" x 10" (254 x 254 mm),

12" x 12" (305 x 305 mm)

Material: Aluminum, Brass, Bronze or Stainless Steel
Finishes: US3, US4, US10B, US15A, US26, US26D, US28 and US32D only.
Fasteners: 3/8" Diameter Bolts
Weight: 5 lbs, 6 lbs, 3 lbs, 4 lbs (US28)

BTB - 930B

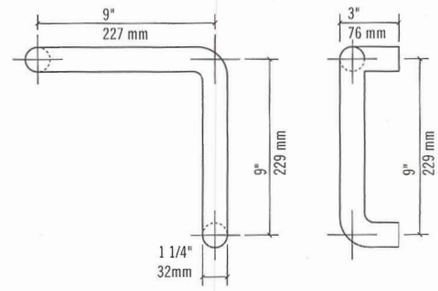

S-Shaped Pull
932P Right
932P Left

30" (762 mm)

Material: Aluminum, Brass, Bronze or Stainless Steel
Finishes: US3, US4, US10B, US15A, US26, US26D, US28 and US32D only.
Fasteners: 3/8" Diameter Bolts
Weight: 7.5 lbs

BTB - 932B

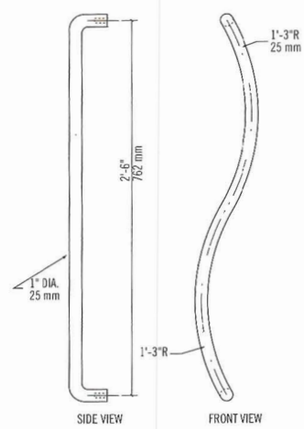

rev. 7/02

"THE FIRST FAMILY OF SUPERIOR HARDWARE"

Hager Pulls

HAGER COMPANIES

NEW PRODUCT!

Cast Door Pull
933P

6" (152 mm)
Material: Brass, Bronze
Finishes: US3, US4, US10, US10B, US26, US26D only.
Fasteners: 3/8" Diameter Bolts
Weight: .9 lbs

BTB - 933B

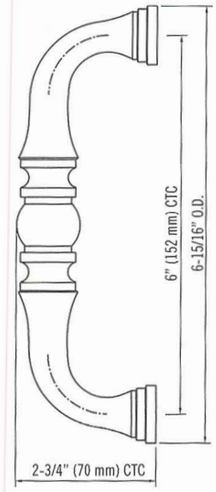

Offset Pull
934P

12" (305 mm), 16" (406 mm), 18" (457 mm),
Material: Aluminum, Brass, Bronze or Stainless Steel
Finishes: US3, US4, US10B, US15A, US26, US26D, US28 and US32D only.
Fasteners: 3/8" Diameter Bolts
Weight: 6 lbs, 7 lbs, 8 lbs
Diameter: 1"

BTB - 934B

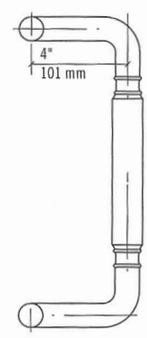

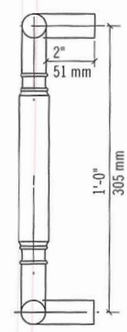

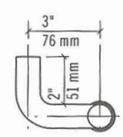

Hager Pulls

Square Tip Pull

960P

Overall Length: 16" (406 mm)
CTC: 12" (305 mm)
Material: Aluminum, Brass, Bronze or Stainless Steel
Finishes: US3, US4, US10B, US15A, US26, US26D, US28 and US32D only.
Fasteners: 5/16 x 18 Bolt
Weight: 5 lbs

BTB - 960B

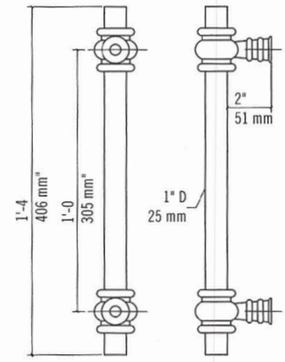

Steeple Tip Pull

961P

Overall Length: 17" (432 mm)
CTC: 12" (305 mm)
Material: Brass/Bronze
Finishes: US3, US4, US10B, US15A, US26, and US26D only.
Fasteners: 3/8" Diameter Bolts
Weight: 5 lbs

BTB - 961B

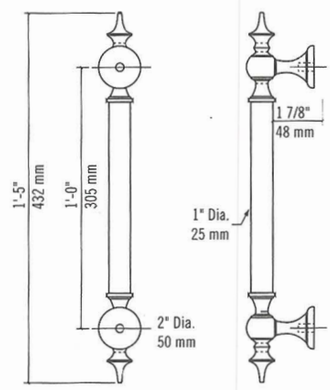

Acorn Pull

962P

Overall Length: 16 5/16" (414 mm)
CTC: 12" (305 mm)
Material: Brass/Bronze
Finishes: US3, US4, US10B, US15A, US26, and US26D only.
Fasteners: 3/8" Diameter Bolts
Weight: 4 lbs

BTB - 962B

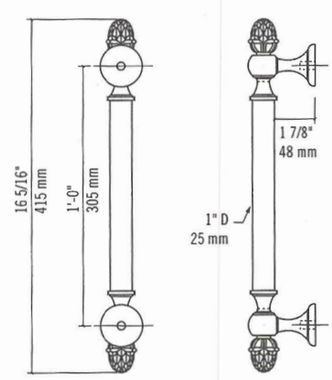

PH. 1-800-325-9995 or 1-314-772-4400 • Fax 1-800-782-0149 or 1-314-772-0744

rev. 7/02

"THE FIRST FAMILY OF SUPERIOR HARDWARE"

Hager Pulls

NEW PRODUCT!

Cast Door Pull

963P

12"CTC (304 mm), 16"CTC (406 mm), 18"CTC (457 mm), 24"CTC (610 mm), 30"CTC (762 mm)

Material: Brass, Bronze
Finishes: US3, US4, US10, US10B, US15, US26, US26D
Fasteners: 3/8" Diameter Bolts
Weight: (for 12") 2.85 lb.

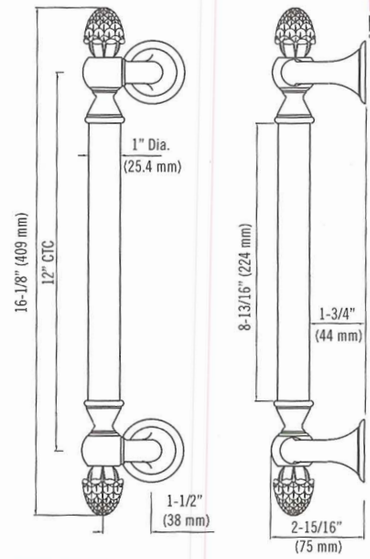

Horn Pull

967P

Overall Length: 20 5/16" (521 mm)

Material: Brass/Bronze
Finishes: US3, US4, US10B, US15A, US26, and US26D only.
Fasteners: 3/8" Diameter Bolts
Weight: 14 lbs

BTB - 967B

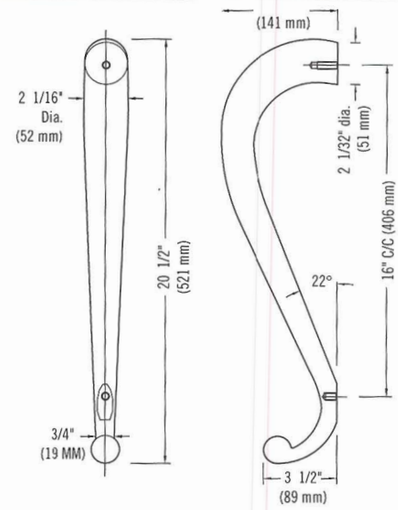

Door Handle

970P Pull
971P Push Bar

Overall Length: 16 3/4" (425 mm)

Material: Brass/Bronze
Finishes: US3, US4, US10B, US15A, US26, and US26D only.
Fasteners: 3/8" Diameter Bolts
Sizes to match door widths for 971P Push bar
Weight: 8 lbs (Pull Bar), 4 lbs (Push Bar)

BTB - 970B or 971B

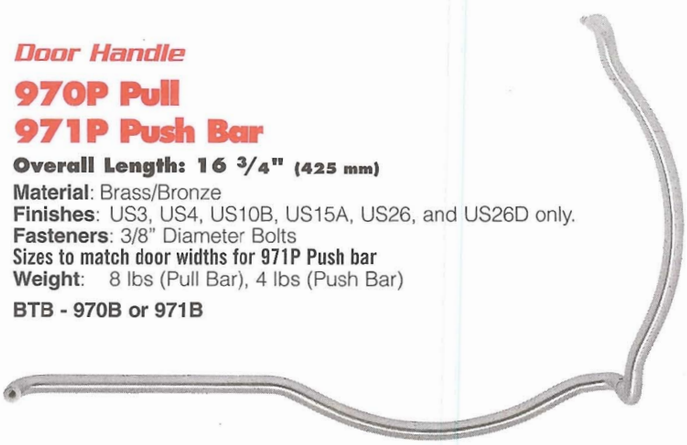

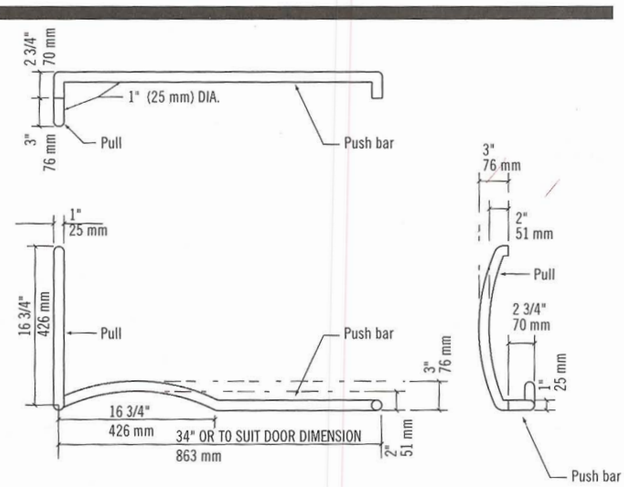

Hager Pulls

NEW PRODUCT!

HAGER COMPANIES

Door Pull

974P

Overall Length: 12" CTC (304 mm), 18"CTC (457 mm), 24"CTC (610 mm), 30"CTC (762 mm), 36"CTC (914 mm), 48"CTC (1219 mm)

Material: Brass, Bronze, Stainless Steel
Finishes: US3, US26, US26D, US32, US32D
Finishes (Post): Black Anodized Aluminum, or High-Polished Aluminum
Fasteners: 3/8" Diameter Bolts
Weight: (for 12") 4.45 lbs.
Bar Diameter: 1" (25.4 mm)

BTB - 974B

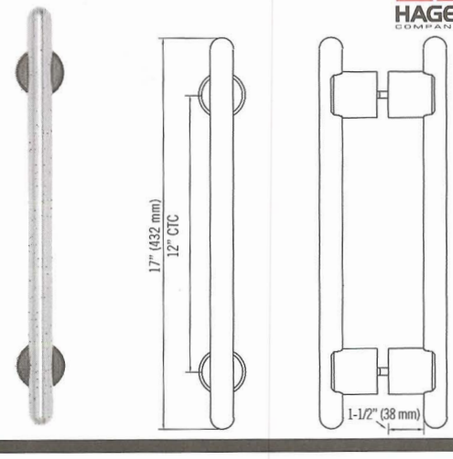

Vertical Pull

975P Pull

Overall Length: 36"(914 mm), 72"(1829 mm)

Material: Brass/Bronze
Finishes: US3, US4, US10B, US15A, US26, US26D and US32D only.
Fasteners: 3/8" diameter bolt
Fasteners: 3/8" Diameter Bolts
Weight: 36" - 9 lbs
Weight: 72" - 18 lbs

BTB - 975B

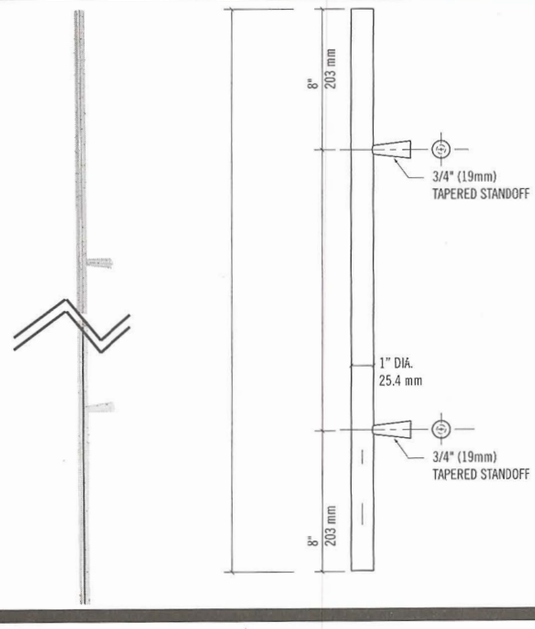

Door Pull

976P

20" (508 mm) (30" (762 mm) Overall)

Material: Stainless Steel
Finishes: Non-Directional Finish, US32D
Finishes (Post): US32D
Fasteners: 3/8" Diameter Bolts
Weight: Approx. 6 lbs.

BTB - 976B

NEW PRODUCT!

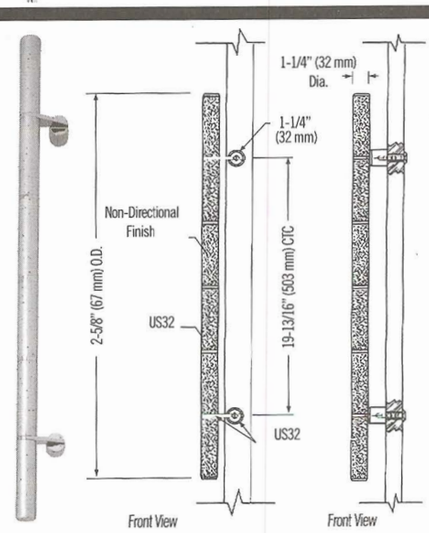

PH. 1-800-325-9995 or 1-314-772-4400 • Fax 1-800-782-0149 or 1-314-772-0744

rev. 7/02

"THE FIRST FAMILY OF SUPERIOR HARDWARE"

Hager Pulls

Segment Shape (Straight)

980P

9" (229 mm), 12" (305 mm), 18" (457 mm) and 24" (610 mm)

Material: Brass/Bronze or Stainless Steel
Finishes: US3, US4, US10B, US15A, US26, US26D and US32D only.
Fasteners: 3/8" Diameter Bolts
Weight: 3 lbs, 4 lbs, 5 lbs, 8 lbs

BTB - 980B

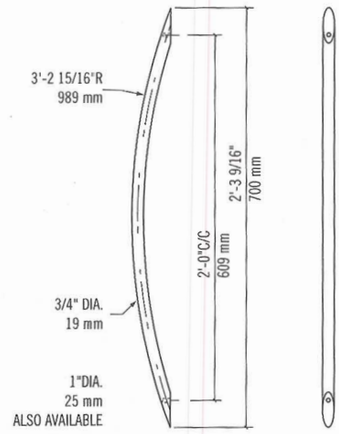

Segment Shape (Offset)

981P

9" (229 mm), 12" (305 mm), 18" (457 mm) and 24" (610 mm)

Material: Brass/Bronze or Stainless Steel
Finishes: US3, US4, US10B, US15A, US26, US26D and US32D only.
Fasteners: 3/8" Diameter Bolts
Weight: 3 lbs, 4 lbs, 5 lbs, 8 lbs

BTB - 981B

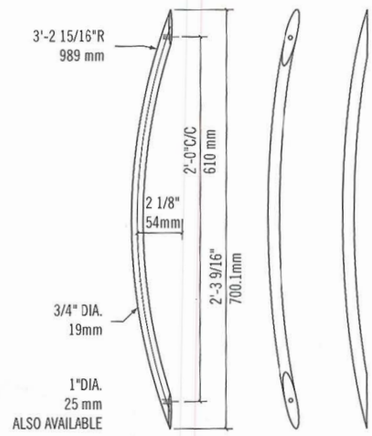

Straight Pull

982P

20" CTC (508 mm),

Material: Brass/Bronze or Stainless Steel
Finishes: US3, US4, US10B, US15A, US26, US26D and US32D only.
Fasteners: 3/8" Diameter Bolts
Weight: 5.25 lbs

BTB - 982B

NEW PRODUCT!

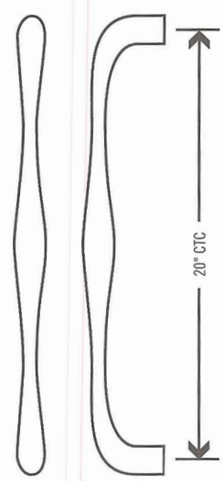

Hager Pulls

HAGER COMPANIES

Curved Pull

983P Right
983P Left

20" CTC (508 mm),

Material: Brass/Bronze or Stainless Steel
Finishes: US3, US4, US10B, US15A, US26, US26D and US32D only.
Fasteners: 3/8" Diameter Bolts
Weight: 5.45 lbs

BTB - 983B

NEW PRODUCT!

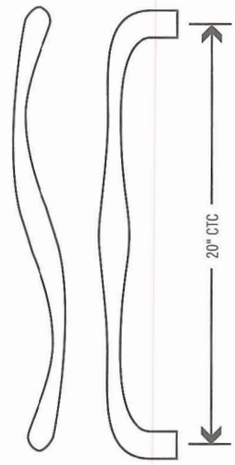

Curved Pull

984P Right
984P Left

12" CTC (305 mm), 20" CTC (508 mm),

Material: Brass/Bronze or Stainless Steel
Finishes: US3, US4, US10B, US15A, US26, US26D and US32D only.
Fasteners: 3/8" Diameter Bolts
Weight: 2.45 lbs (12"), 5.35 lbs (20")

BTB - 984B

NEW PRODUCT!

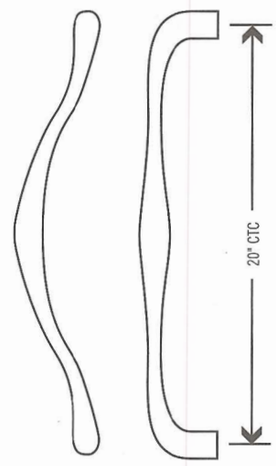

Curved Pull

985P

14" (356 mm)

Material: Brass/Bronze or Stainless Steel
Finishes: US3, US4, US10B, US15A, US26, US26D and US32D only.
Fasteners: 3/8" Diameter Bolts
Weight: 7 lbs, 11 lbs

BTB - 985B

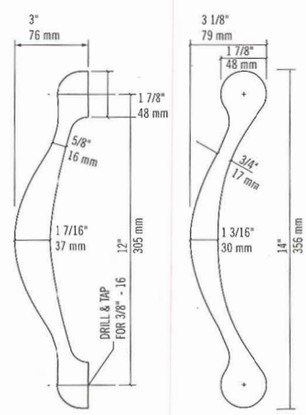

PH. 1-800-325-9995 or 1-314-772-4400 • Fax 1-800-782-0149 or 1-314-772-0744

rev. 7/02

"THE FIRST FAMILY OF SUPERIOR HARDWARE"

Hager Pulls

Curved Pull

986P

22" (559 mm),
Material: Brass, Bronze or Stainless Steel
Finishes: US3, US4, US10B, US15A, US26, and US26D only.
Fasteners: 3/8" Diameter Bolts
Weight: 4 lbs, 7 lbs

BTB - 986B

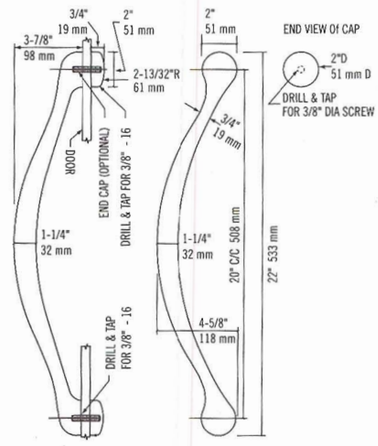

Double Curved Pull

987P

20" (508 mm)
Material: Brass, Bronze or Stainless Steel
Finishes: US3, US4, US10B, US15A, US26, and US26D only.
Fasteners: 3/8" Diameter Bolts
Weight: 8.5 lbs

BTB - 987B

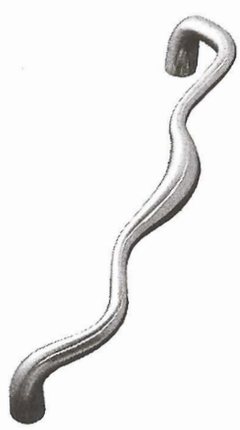

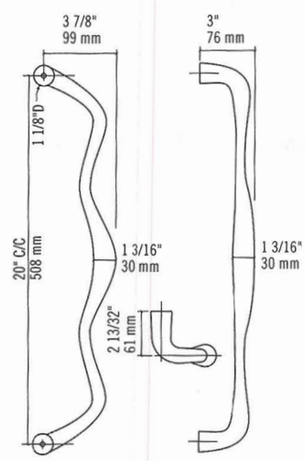

Hager Pulls

HAGER COMPANIES

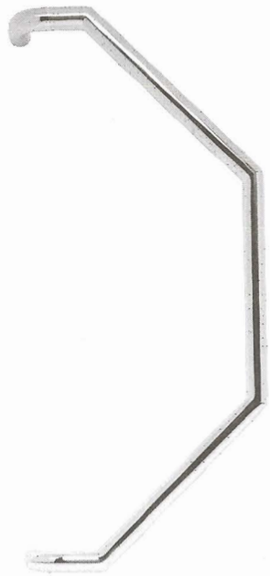

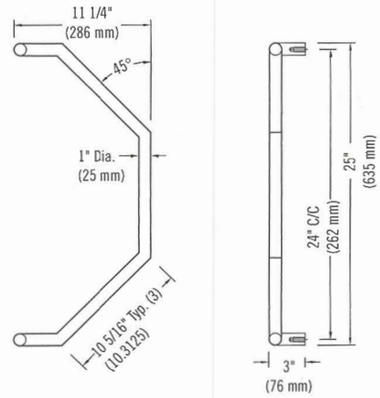

Offset Pull

988P

24" (610 mm)

Material: Brass, Bronze or Stainless Steel
Finishes: US3, US26D and US32D only.
Fasteners: 3/8" Diameter Bolts
Weight: 8 lbs

BTB - 988B

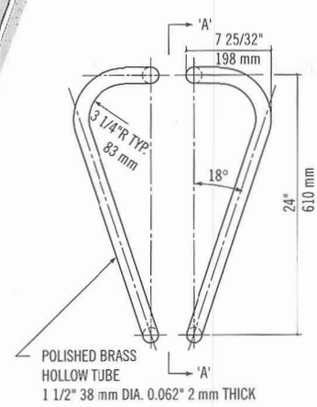

18 Degree Pull Bar, Handed

990P

20" (508 mm)

Material: Aluminum, Brass, Bronze or Stainless Steel
Finishes: US3, US4, US10B, US15A, US26, US26D US28, and US32D only.
Fasteners: 3/8" Diameter Bolts
Weight: 12 lbs

BTB - 990B

PH. 1-800-325-9995 or 1-314-772-4400 • Fax 1-800-782-0149 or 1-314-772-0744

rev. 7/02

"THE FIRST FAMILY OF SUPERIOR HARDWARE"

Hager Pulls

HAGER COMPANIES

Bronze Fly Rod Pull

991P Right
991P Left

27 1/2" x 5 3/4" x 3 1/2"
(699 x 147 x 89 mm)
Hand Clearance: 2" (51 mm)
Material: Cast Bronze
Fasteners: 3/8" Diameter Bolts
Finishes: Patina
Weight: 11 1/2 lbs

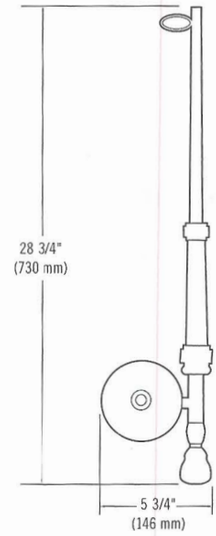

Bronze Cuda Pull

992P Right
992P Left

15 5/8" x 5" x 3 1/2"
(397 x 127 x 89 mm)
Hand Clearance: 2 3/8" (60 mm)
Material: Cast Bronze
Fasteners: 3/8" Diameter Bolts
Finishes: Patina
Weight: 8 lbs

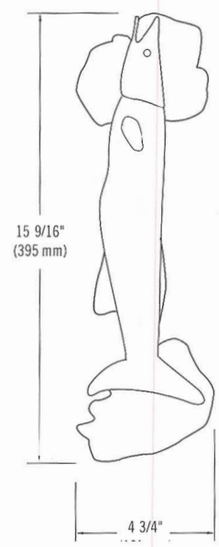

Hager Pulls

HAGER COMPANIES

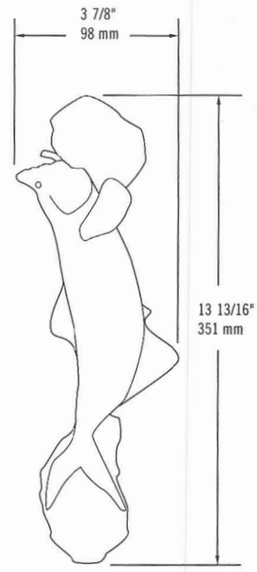

Bronze Tarpon Pull

993P Right
993P Left

14" x 4 1/4" x 3 "
(356 x 108 x 76 mm)
Hand Clearance: 2 1/8" (54 mm)
Material: Cast Bronze
Fasteners: 3/8" Diameter Bolts
Finishes: Patina
Weight: 3.8 lbs

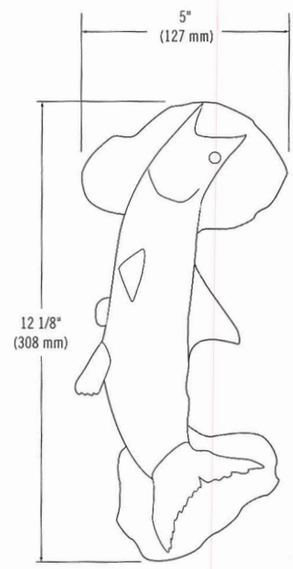

Bronze Tarpon Push Plate

994P Right
994P Left

12 1/8" x 5 1/2" x 3/4"
(308 x 140 x 19 mm)
Hand Clearance: n/a
Material: Cast Bronze
Fasteners: 3/8" Diameter Bolts
Finishes: Patina
Weight: 4 lbs

PH. 1-800-325-9995 or 1-314-772-4400 • Fax 1-800-782-0149 or 1-314-772-0744

rev. 7/02

"THE FIRST FAMILY OF SUPERIOR HARDWARE"

Hager Pulls

HAGER COMPANIES

Bronze Gator Hump Back Pull

995P Right
995P Left

15 5/8" x 5" x 2 3/8"
(397 x 127 x 60 mm)
Hand Clearance: 1 1/2" (38 mm)
Material: Cast Bronze
Fasteners: 3/8" Diameter Bolts
Finishes: Patina
Weight: 6 lbs

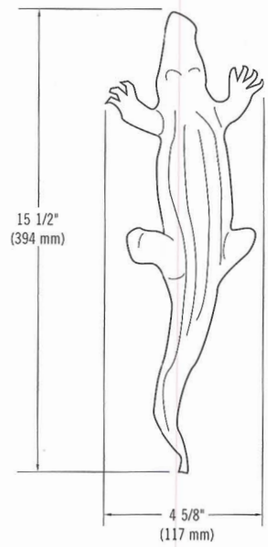

Bronze Heron Pull

996P Right
996P Left

24 3/8" x 4 1/8" x 4"
(619 x 105 x 102 mm)
Hand Clearance: 2 1/8" (54 mm)
Material: Cast Bronze
Fasteners: 3/8" Diameter Bolts
Finishes: Patina
Weight: 8 lbs

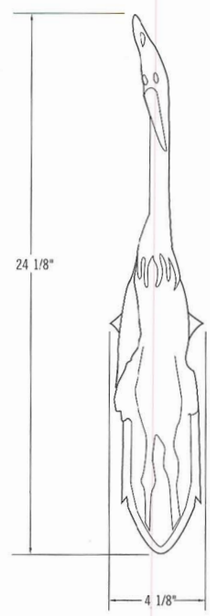

Hager Pulls

Flush Cup Pull

For use on bi-fold, by-pass, and pocket applications.

2630

Bulk
Solid Brass
Available in US3, US5, US10B, US15A, US19, US26, and US26D Finish.
Diameter bore: 2⅛" (54 mm).

Quantity	
Box	Case
? each	? each

Pocket Door Edge Pull (Architectural Grade)

9882

Bulk
Solid Brass available in US3, US4, US10, US10B, US26, and US26D finish
Face plate size: ¾" x 3⅞" (19 mm x 98mm)
Screws: #6 x 5/8 FPHW

Fasteners	Quantity	
	Box	Case
#6 x 5/8 FPHW	10	100

PH. 1-800-325-9995 or 1-314-772-4400 • Fax 1-800-782-0149 or 1-314-772-0744

rev. 7/02

"THE FIRST FAMILY OF SUPERIOR HARDWARE"