ARCHITECTURAL HINGES ➤ TRIM & AUXILIARY HARDWARE ➤ THRESHOLD & WEATHERSTRIPPING ➤ RESIDENTIAL HARDWARE ➤ SLIDING DOOR HARDWARE ➤ ROTON CONTINUOUS GEARED HINGES ➤ STAINLESS STEEL CONTINUOUS HINGES ➤

HAGER®
COMPANIES
ST. LOUIS, MISSOURI

ROTON CONTINUOUS GEARED HINGES

Roton General Information

NUMERICAL INDEX

Item #	Page #	Item #	Page #	Item #	Page #	Item #	Page #
750-134	C21	780-057	C33	780-114	C28	780-213HD	C45
750-138	C22	780-057HD	C33	780-114HD	C25	780-224	C30
780-041	C23	780-110	C24	780-155	C28	780-224HD	C30
780-041HD	C23	780-110HD	C24	780-155HD	C43	780-224LL	C30
780-045	C39	780-111LL	C25	780-157	C34	780-226	C31
780-045HD	C39	780-111	C25	780-157HD	C34	780-226HD	C31
780-046	C40	780-111HD	C26	780-208	C29	780-226LL	C31
780-046HD	C40	780-112	C26	780-208HD	C29	780-235HD	C32
780-053	C41	780-112HD	C26	780-210	C35	780-257HD	C36
780-053HD	C41	780-112LL	C27	780-210HD	C35	780-259	C46
780-054	C42	780-113	C27	780-211HD	C44	780-259HD	C46
780-054HD	C42	780-113HD	C27	780-213	C45	780-300HD	C37

ALPHABETICAL INDEX

Subject	Page #
750-Series	C5
780-Series	C5
780FF-Series	C6
780HD-Series	C5
780LL-Series	C6
Architectural Specification	C18
Bearings	C7
Bearings, Special Applications	C10
Benefits	C3-C4
Bifold Applications	C33
Center Hung Applications	C28, C37, C43
Checking the Load	C9
Choosing Correct Model	C7
Concealed Leaf Models	C21-C31
Dimensions, Fully Concealed Models	C13
Dimensions, Full Surface Models	C12
Dimensions, Half Surface Models	C12
Door Closers	C14
Door Edge Protection	C21-C23, C30
Door Preparation	C14
Door Weights, Estimated	C8-C9
Electric Hinge Modification	C14-C15
Fasteners, 750 and 780-Series	C11
Fasteners, Metal Doors/Frames	C11
Fasteners, Self Drilling	C11
Fasteners, Sexbolts	C11
Fasteners, Thread Forming	C11
Finishes, Painted	C10
Finishes, Special	C10
Finishes, Standard	C10
Fire-Rated Hinges	C6, C23-C26, C30-C31
Frequency Determination	C8
Full Surface Models	C33-C37
General Information	C3-C4
Half Surface Models	C39-C46
Installation, Aids	C16
Installation, Centering Punches	C16
Installation, Marking Jigs	C16
Installation, Shim Stock	C16
Installation, Video	C16
Lead-Lined Models	C25, C26, C30, C31
Lengths, Recommended	C9
Lengths, Special	C10
Lengths, Specification	C10
Lengths, Standard	C9
Modifications, Field	C10
Polished Cover Channels	C16
Safety Hinge	C27
Security Moldings, Replacement	C17
Special Hinges, Cabinet	C14
Special Hinges, Dutch Door	C14
Special Hinges, Electric	C14-C15
Special Hinges, Extra Long	C14
Special Products, Cover Channels	C16
Special Products, Security Moldings	C16
Swing Clear Applications	C23
Toilet Stall Applications	C29, C46

Roton General Information

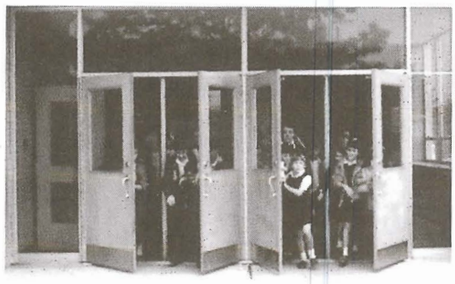

The Continuous Hinge for Continuous Traffic.

Roton™ is the hinge to specify in high-traffic and high-impact areas. Whether for retrofit projects or new construction, Roton does the job. And it does so by solving and preventing problems.

Continuous Integrity.

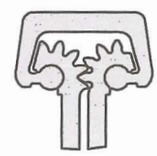

What makes Roton different from conventional hinges? Mainly, its design. As the name implies, this continuous hinge extends the full length of the door and frame. Instead of a pin, typical of traditional hinges, it uses two centers to form a rotating joint. Since the two centers roll when they come in contact, lateral wear is minimized. The unique gear profile extends from top to bottom inside a high-strength cover channel. The door weight is supported and cushioned by molded Lubriloy™ RL bearings evenly spaced along the entire length of the interlocking leaves. In a sense, the Roton hinge physically bonds the door and frame together.

Roton Reduces Stress.

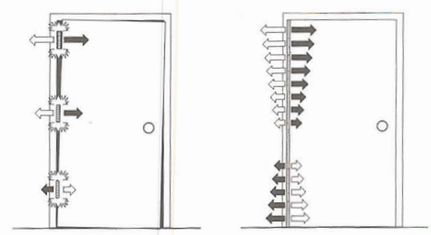

Why does Roton perform better than traditional hardware in high-traffic and high-impact areas? Typically, traditional hardware is under-specified or poorly installed due to misaligned cut-outs. With butts and pivots, door weight and stress are localized. The resulting twisting causes distortion and uneven wear. Roton evenly distributes the door weight.

How Something So Straight Can Be So Flexible.

When Roton is used in retrofit projects, it can actually "rehabilitate" a warped frame or misaligned door. But its ability to correct problems does not limit its flexibility at the job site; in fact, no door or frame preparation is required. Doors can be reversed in hand or in swing. Unused mortise cut-outs are covered by the full length of the hinge leaves. It's adaptability to many situations makes it a valuable tool for you.

Still Swinging After All These Years.

It stands to reason that high traffic hardware would need more frequent replacement. Roton actually extends the life of an opening and reduces replacement and maintenance costs.

Roton is purposely designed and manufactured to last longer. Each leaf and cover channel is made of hard extrusion alloys (6063-T6 Aluminum) to minimize friction and wear. Bearing units are molded from Lubriloy™ RL, an engineered nylon, to ensure hard, durable, resilient, and uniformly shaped bearings. Roton is low-temperature and corrosion resistant, perfect for swimming pool buildings, sewage and water treatment plants, salt spray environments and freezing conditions.

Roton General Information

CONTINUOUS BENEFITS

Long Life

Roton extends the life of an opening. Typical problems such as door bind and sag are eliminated, reducing service calls and maintenance costs.

Ease of Motion

Roton design reduces friction. Even the heaviest doors are easier to open.

Security

Because Roton eliminates the gap between the door and frame, doors can't be pried open or removed. This makes for a secure seal, useful in high-security applications.

Energy Savings

The amount of energy lost through the typical hinge-side gap equals the energy lost through a 3" square hole. Roton provides a continuous and permanent weather barrier.

Privacy

Roton conceals gaps typically left when doors are open. When privacy is needed, as in public restrooms, Roton is the perfect cover-up.

Warp Resistance

Roton hinges may help eliminate the warping of wood or laminate doors.

Sound Retardation

By eliminating the gap between the hinge and the door, Roton helps reduce noise transmission.

Safety

Various models of the Roton hinge will help prevent pinched fingers. These models are specifically designed for use with stopless frames to allow doors to close with little fear of injury.

Appearance

The continuous cover channel provides an award-winning design and aesthetically pleasing appearance.

Roton General Information

CHOOSING THE CORRECT ROTON HINGE

In general, the life of any hinge is measured by wear, which is related to the product of the door weight multiplied by number of cycles of operation. Consideration should be given to the design of the door itself, selecting, where possible, an appropriately high strength-to-weight ratio, low inertia door construction for ease of operation, high performance and safety.

Roton builds hinges in five basic application ranges as explained below:

1. 750 Series (Residential Grade) – 10-$^1/_4$" bearing centers – 100 lbs.
2. 780 Series (Standard Duty – Commercial Grade) – 5-$^1/_8$" bearing centers – 200 lbs
3. 780 HD (Heavy Duty – Commercial Grade) – 2-$^9/_{16}$" bearing centers – 200 lbs
4. 780 LL (Lead Lined – Commercial Grade) – 2-$^9/_{16}$" bearing centers – 200 lbs
5. 780 Series (Fire Rated – Commercial Grade) – 2-$^9/_{16}$" bearing centers – 200 lbs

1. All 750 Series Roton Hinges are manufactured with thrust bearings spaced along the hinge length on 10-1/4" centers. A typical 750 Series 83" Roton Hinge carries the door weight on EIGHT bearings. 750 Series hinges are recommended for use at moderate frequencies with interior solid core wood doors up to 100 lbs., or in low frequency applications to 150 lbs. This series is ideal for residential applications or commercial interior. This series is not intended for hollow metal openings or exterior entranceways, except in private residential applications.
2. All 780 Standard Duty Series Roton Hinges are manufactured with thrust bearings spaced along the hinge length on 5-1/8" centers. A typical 780 Series 83" Roton Hinge carries the door weight on SIXTEEN bearings. The cover channel, the bearing spacings and screw fastener locations are designed for heavier loads than hinges in the 750 Series.
3. All 780 "HD" Series Roton Hinges are manufactured with thrust bearings spaced along the hinge length on 2-9/16" centers. A typical "HD" Series 83" Roton Hinge carries the door weight on THIRTY-TWO bearings.These hinges are supplied with staggered screw holes to suit heavy-duty applications such as high traffic entrance ways, classroom doors, stairwell doors, etc. These hinges are suffixed "HD" for Heavy Duty.
4. All 780 "LL" Series Roton Hinges are manufactured with thrust bearings spaced along the hinge length on 2-9/16" centers. A typical "LL" Series 83" Roton Hinge carries the door weight on THIRTY-TWO bearings. These hinges are supplied with a double row of screw holes on each leaf for very heavy door applications such as lead-lined X-ray doors, sound studio doors and heavy security doors. These hinges are listed with the suffix "LL" (Lead-Line), and have been used very successfully with door weights of over 1,000 lbs.
5. The Roton models listed below have Underwriters Laboratories, Inc. listing for the following fire ratings:

Fire Ratings: Underwriters Laboratories, Inc. Fire Rating/File #R14627

Fire Rated Roton	Fully Concealed	Half Surface	Full Surface
20 Minute Fire Rated Wood Door x Fire Rated Hollow Metal Frame	U/L — FF	U/L — FF	U/L — FF
20 Minute Fire Rated Metal Door x Fire Rated Hollow Metal Frame	U/L — FF	U/L — FF	U/L — FF
30 Minute Fire Rated Wood Door x Fire Rated Hollow Metal Frame (Canada)	U/L — FF	U/L — FF	U/L — FF
30 Minute Fire Rated Metal Door x Fire Rated Hollow Metal Frame (Canada)	U/L — FF	U/L — FF	U/L — FF
45 Minute Fire Rated Wood Door x Fire Rated Hollow Metal Frame	U/L — FF	U/L — FF	U/L — FF
45 Minute Fire Rated Metal Door x Fire Rated Hollow Metal Frame	U/L — FF	U/L — FF	U/L — FF
60 Minute Fire Rated Wood Door x Fire Rated Hollow Metal Frame	U/L — FF	U/L — FF	U/L — FF
60 Minute Fire Rated Metal Door x Fire Rated Hollow Metal Frame	U/L — FF	U/L — FF	U/L — FF
90 Minute Fire Rated Wood Door x Fire Rated Hollow Metal Frame	U/L — Stud	U/L — Stud	U/L — Stud
90 Minute Fire Rated Metal Door x Fire Rated Hollow Metal Frame	U/L — FF	U/L — FF	U/L — FF
3 Hour Fire Rated Hollow Metal Door x Fire Rated Hollow Metal Frame	U/L — Stud	U/L — Stud	U/L — Stud

Roton General Information

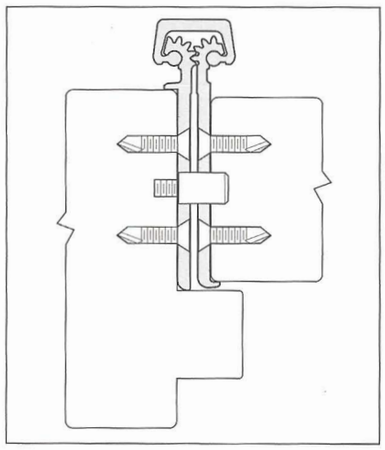

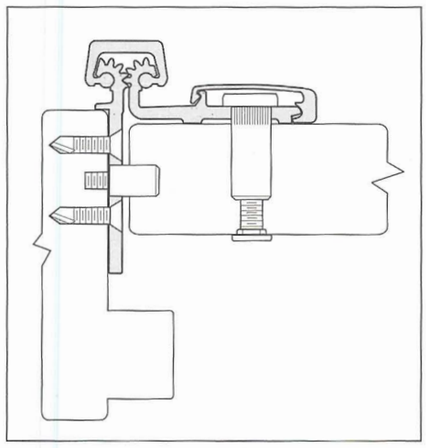

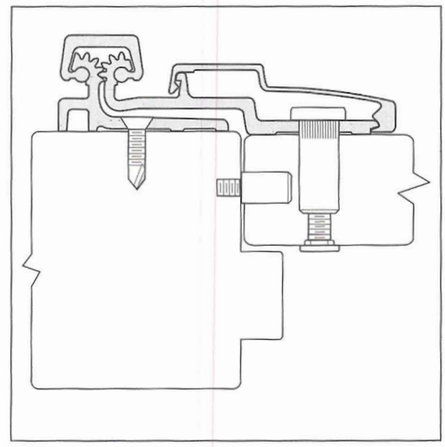

Fully Concealed — These models leaves are concealed between the rabbet of the frame and the hinge edge of the door.

Models available: 780-041, 780-041 HD, 780-110, 780-110 HD, 780-111, 780-111 HD, 780-112, 780-112 HD, 780-112 LL, 780-224, 780-224 HD, 780-224 LL, 780-226, 780-226 HD, 780-226 LL

Half Surface — These models have the frame leaf concealed between the rabbet of the frame and the edge of the door. The door leaf is mounted to the face of the door with through bolts or screws.

Models available: 780-045, 780-045 HD, 780-046, 780-046 HD, 780-053, 780-053 HD, 780-054, 780-054 HD, 780-211 HD, 780-300 HD.

Full Surface — These models have the frame leaf mounted to the face of the frame. The door leaf is mounted to the face of the door with through bolts.

Models available: 780-057, 780-057 HD, 780-157, 780-157 HD, 780-210, 780-210 HD, 780-257 HD

Series 780 Roton hinges are approved for use on swing type doors of hollow metal, tin-clad, sheet-metal and steel covered composite type rated up to and including 3 hours.

Wood composite doors rated up to and including 1-1/2 hours.

Wood core doors rated up to 20 minutes without hose stream, non-studded.

Maximum Door Size:	Single	Double	Thickness
	4'0" x 10'0"	8'0" x 10'0"	1-3/4"

Standard Lengths available — 79", 83", 85", 95", 119".

Custom lengths are also available under 119".

When ordering, part numbers should be as follows:

Example: 780-112 LL 83" Clear U/L — FF

Example: 780-211 HD 95" DB U/L — Stud

PH. 1-800-325-9995 or 1-314-772-4400 • Fax 1-800-782-0149 or 1-314-772-0744

rev. 7/02

EVERYTHING HINGES ON HAGER!

Roton General Information

ROTON HINGE CONSTRUCTION

Roton Hinge bearings are spaced as follows:

750 Series:	**10-1/4" Centers**	**(Typical 7' door: 8 bearings)**
780 Series:	**5-1/8" Centers**	**(Typical 7' door: 16 bearings)**
780 HD & LL:	**2-9/16" Centers**	**(Typical 7' door: 32 bearings)**

Longer hinges have proportionately more bearings. Roton Hinges over 10 feet in length are shipped as an interlocking endwise assembly, and are available in any required length. For doors with unusual door heights which exceed 10 feet, please consult the factory for additional ordering information.

If additional dry lubricant is neccesary, use a spray Teflon, dry lubricant. A recommended type of off-the-shelf lubricant would be Bordens-Elmers "Slide-All".

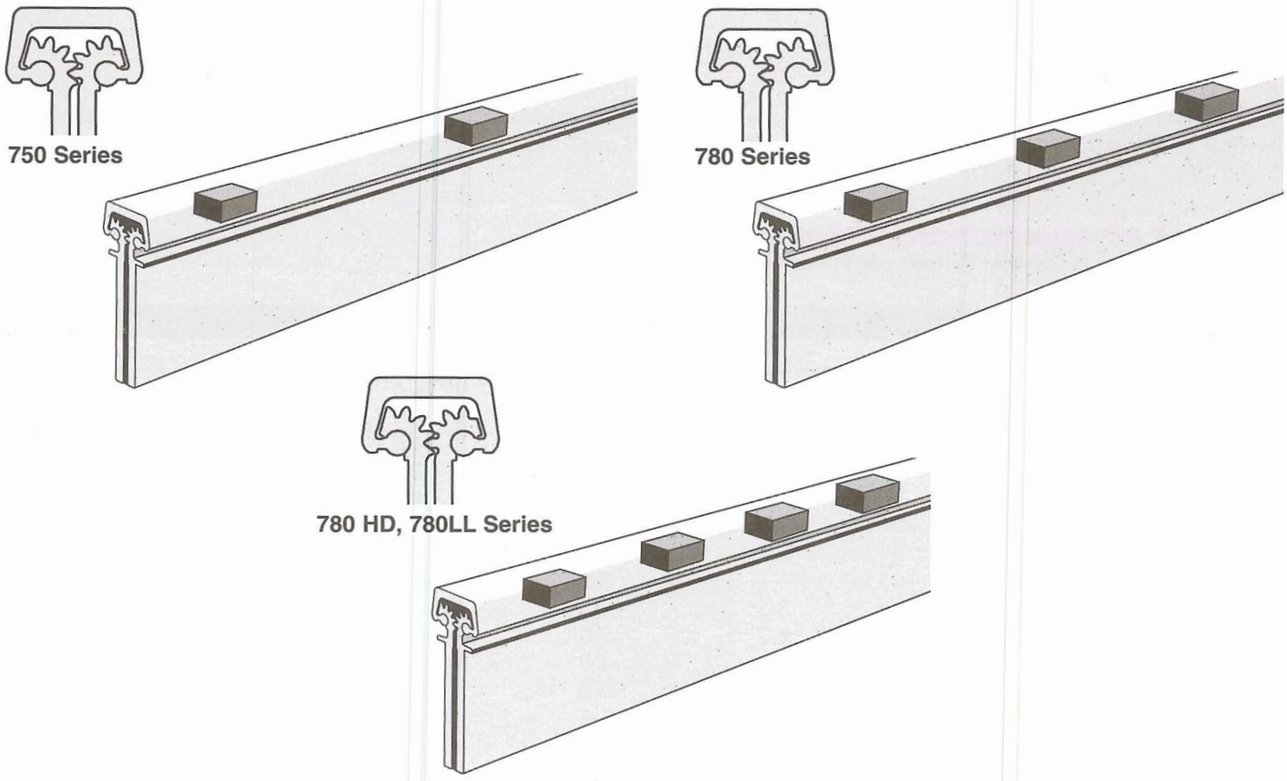

PROCESS FOR CHOOSING THE CORRECT ROTON MODEL

Determine	Select
Determine door and frame application (i.e. flush door and frame, inset door, door thickness, door height, etc.).	Roton model.
Determine frequency of door cycling and weight of door.	Standard duty, Heavy duty, or Lead Lined.
Determine door and frame material.	Fasteners.
Determine door opening finish.	Roton finish.
Determine fire rating requirements, if required.	With stud or without stud.

Roton General Information

FREQUENCY DETERMINATION

Many Roton-equipped openings have estimated annual usages of over five million cycles per year in large schools, airports, shopping centers and government buildings. Please refer to the usage estimate schedule listed below.

TABLE OF ESTIMATED USAGE

Type of Building	Expected Daily	Frequency Annual
High Frequency		
Large Department Store	5,000	1,825,000
Large Office Entrance	4,000	1,460,000
Hospital Corridor	3,000	1,095,000
School Entrance	1,250	456,250
Office Stairwell	500	182,500

Type of Building	Expected Daily	Frequency Annual
Medium Frequency		
Hospital Consultant Room	100	36,500
School Corridor	100	36,500
Office Bldg. Corridor	80	29,200
Storage Room	50	18,250
Low Frequency		
Residential Entrance	30	10,950
Residential Interior	20	7,300

DOOR WEIGHT

Weight as much as frequency plays an important role in hinge performance. Equal consideration should be given to the design of the door itself, selecting the appropriate hinge for ease of operation, high performance, and occupant safety.

Table #1 of Approximate Door Weights

Approximate Door Weights in Pounds per Square Foot

Door Material	Door Thickness				
	1-3/8"	1-3/4"	2"	2-1/4"	2-1/2"
Ash	4.5	5.3	6.0	6.8	7.5
Birch	3.8	4.3	5.0	5.6	6.3
Fir	3.0	3.5	4.0	4.5	5.0
Mahogany	4.5	5.3	6.0	6.8	7.5
Oak	6.0	7.3	8.0	9.0	10.0
White Pine	3.0	3.5	4.0	4.5	5.0
Res. HollowCore	1.7	2.5	—	—	—
Inst. Hollow Core	—	3.2	—	—	—
Stave Core	3.3	4.2	—	5.4	—
Particle Board Core	4.0	5.0	—	—	—
Mineral Core	—	4.0	—	—	—
Acoustical Core	—	8.3	—	10.6	—
Fiberglass	—	3.8	—	—	—
Hollow Metal 18 gauge	4.3	4.6	—	—	—
Hollow Metal 16 gauge	5.4	5.8	—	—	—
Hollow Metal 15 gauge	6.2	6.5	—	—	—
Hollow Metal 14 gauge	7.0	7.3	—	—	—
Hollow Metal 13 gauge	8.3	8.7	—	—	—
Hollow Metal 12 gauge	9.9	10.2	—	—	—
Hollow Metal 11 gauge	11.2	11.6	—	—	—
Hollow Metal 10 gauge	12.8	13.0	—	—	—
Lead Lined Doors					
1-3/4" Wood w/ 1/16" lead	—	8.7	—	—	—
1-3/4" Wood w/ 1/8" lead	—	12.4	—	—	—
1-3/4" Wood w/ 3/16" lead	—	16.1	—	—	—
1-3/4" Wood w/ 1/4" lead	—	19.8	—	—	—
1-3/4" Wood w/ 3/8" lead	—	27.2	—	—	—
1-3/4" Wood w/ 1/2" lead	—	34.6	—	—	—

Roton General Information

Table #2 of Approximate Door Weights for 1-3/4" Door

Estimated Door Weights in Pounds for 1-3/4" Door - exclusive of door hardware

Door Type	Pounds per sq. ft.	3'0" x 7'0"	4'0" x 7'0"
Ash	5.3	111.3	148.4
Birch	4.3	90.3	120.4
Fir	3.5	73.5	98.0
Mahogany	5.3	111.3	148.4
Oak	7.3	153.3	204.4
White Pine	3.5	73.5	98.0
Res. Hollow Core	2.5	52.5	70.0
Inst. HollowCore	3.2	67.2	89.6
Stave Core	4.2	88.2	117.6
Particle Board Core	5.0	105.0	140.0
Mineral Core	4.0	84.0	112.0
Acoustical Core	8.3	174.3	232.4
Fiberglass	3.8	79.8	106.4
Hollow Metal 18 gauge	4.6	96.6	128.8
Hollow Metal 16 gauge	5.8	121.8	162.4
Hollow Metal 15 gauge	6.5	136.5	182.0
Hollow Metal 14 gauge	7.3	153.3	204.0
Hollow Metal 13 gauge	8.7	182.7	243.6
Hollow Metal 12 gauge	10.2	214.2	285.6
Hollow Metal 11 gauge	11.6	243.6	324.8
Hollow Metal 10 gauge	13.0	273.0	364.0

CHECKING THE LOAD

To assist in the selection of an appropriate Roton Hinge Series, divide the door weight (including the weight of the hardware) by the number of bearings in the Roton Hinge under consideration, then use the following guideline, with a maximum 4'0" wide door:

Low frequency interior doors: 20 lbs. per bearing.
Med. frequency interior doors: 15 lbs. per bearing.

Med. frequency exterior doors: 10 lbs. per bearing.
High frequency exterior doors: 7.5 lbs. per bearing.

For best performance at very high frequency, 5 lbs. per bearing will provide maximum life.

Low frequency, very heavy doors (lead lined x-ray doors, ballistics doors, high security doors) should not exceed approximately 30 lbs. per bearing, with double rows of fasteners.

STANDARD LENGTHS

Roton Hinge standard lengths are 6'8" – 79", 7' – 83", 7'2" – 85", 8' – 95" and 10' – 119", for convenience in application to nominal doors. This provides for threshold clearance, head clearance and door height allowances for carpeting. Other lengths may be ordered from the factory (see SPECIAL LENGTHS and SPECIAL PRODUCTS headings).

RECOMMENDED LENGTHS

Roton Hinges are always installed flush with the top edge of the door. No more than 1/16" to 3/32" head clearance is recommended. When the actual door heights are known and the hinge lengths must be accurately matched to the net door heights, order each hinge equal to the door height (or, preferably, a bit shorter to be sure that the moving hinge leaf cannot possibly extend below the door). Where many net heights are likely to appear on the same job, group the sizes to 1/2" increments to be consistent in appearance. Generally, up to 1/2" of door heel exposure is acceptable, but all Roton Hinges should be within 1" of the net door height.

Roton General Information

SPECIAL LENGTHS & LENGTH SPECIFICATION

Actual net door heights may be specified. A special length should be specified from the net door height; not the nominal height of the opening. To order, list the required hinge length dimension along with "actual length" or "net door height".

SPECIAL BEARING APPLICATIONS

Bearing At Top - This application allows for the bearing to be set at the very top of the channel cover. The cover channel is flush with the top of the geared hinge, preventing any obstructions or debris to be inserted in the top channel.

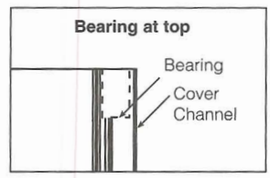

Bearing On Top - This application allows for the bearing to be set at the very top of the extended channel cover. The cover channel is extended the depth of the bearing and projects beyond the top edge of the hinge by the thickness of the bearing, this modification prevents any obstructions or debris from being inserted in the top of the channel.

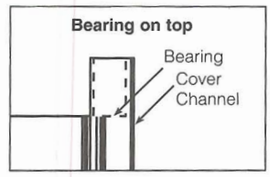

Hospital Type Tip - Some hinges can be prepared with a cover channel tapered at 45° angle at the top of the hinge. These are ideal for use in hospitals and correctional facilities to help provide a clean and safe environment. Please consult the sales office for available models.

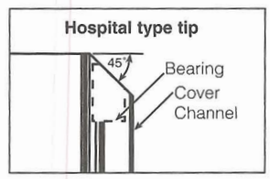

FIELD MODIFICATIONS

While Roton Hinges can be field cut, any product modification may void all warranties. Should in-the-field modifications be required, consult with the factory before proceeding.

The factory will prepare hinges to match actual door heights at no additional charge. While such orders become subject to the change and cancellation policy, factory manufacturing to the required final lengths optimizes fastener hole positioning and insures that the appearance and operation of its products is maintained.

STANDARD FINISHES

Roton Hinges are available in either clear satin anodized aluminum (similar to US 28) or in a dark bronze exterior anodized coating (Duranodic 313 or equal).

SPECIAL COLORS AND FINISHES

All 750 and 780 Series Hinges are available with a polished aluminum cover channel (clear satin anodized leaves), or with a polished gold cover channel (gold satin anodized leaves). Roton Hinges are also available in satin gold anodize, black and various anodize colors. All hinges ordered in special colors should be ordered at the same time (together with any extras if the counts are uncertain), as anodized colors may vary from batch to batch.

PAINTED HINGES

Roton can supply unfinished materials to selected finishers for special projects which require unusual colors or coatings, but will require that final assembly be completed by Roton. Because of special non-removable metal coatings applied to all hinges during assembly, users are cautioned against attempting to refinish any Roton product.

FASTENERS

Roton uses custom made, carefully engineered and thoroughly tested fasteners exclusively. Each fastener is designed for ease of use as well as durability. Appropriate fasteners are furnished with each hinge, together with installation instructions for typical metal or wood doors and frames. The standard screw pack includes self-drilling screws; **if wood screws are required, please specify in the ordering process.**

Hinges normally requiring sexbolts will be furnished with sexbolt holes. Blank leaves, special countersinking or door fastening with pan-head screws are available upon request.

If special fasteners are required, customers must supply them except upon prior agreement. Please consult the factory for alternate fastener recommendations.

Roton General Information

FASTENERS FOR USE WITH HINGES IN THE 750 and 780 SERIES (including HD and LL)

Metal Doors or Frames (Undercut Head Phillips Countersunk Screws):

Two types of screws are available for metal doors and frames: the self-drilling screw (with drill point tip) and the thread forming screw (no tapping necessary). The self-drilling screw has a #12-24 x 11/16" FHUP machine thread in the screw shank. The thread-forming screw has a #12-24 x 13/32" FHUP machine thread in the screw shank.

The standard screw pack is a self-drilling with a #12-24 machine thread. This screw has a hardened steel drill point built into the end of the screw, allowing it to be placed without a pre-drilled hole if the metal thickness is no more than 1/8". It forms its own threads as the screw is drilled into the door or frame. It is longer than most screws of the type because of the built-in drill point.

The alternative screw, basically used on grout filled frames to prevent bowing of the frame, is the thread forming screw. This screw has a short tapered section at the tip. A drilled pilot hole (Range: .173" to .185") is required prior to tapping.

Either of these screws may be used for the attachment of Roton Hinges to metal doors or frames, generally without reinforcement except in thin aluminum or with doors of very heavy weight or anticipated abuse. Both types require center-punching to insure that the screw seats properly in the hinge leaf. Self-centering countersinking center-punches are available.

In all cases, care should be taken to insure that no drill chips build up behind the hinge. It is best to premark the holes and drill for self-threading screws with the hinge removed, or hold the hinge very tightly against the door or frame when using the self-drilling screws.

When ordering the SELF-DRILLING type, make certain that the installer is familiar with the proper use and torque settings of a screw gun. Proper center-punching is extremely important with SELF-DRILLING screws. If center-punching is omitted or incorrectly done, the screw will "walk" in the same way as a drill bit, resulting in "cocked screw" heads and improperly closing hinge leaves.

SEXBOLTS (Throughbolts)

On all applicable surface-mounted hinges, sexbolt sets are furnished in the hardware package together with a transfer punch for accurate marking of the 3/8" drilled holes required. The #1/4"-20 bolt has a 3/8" shoulder under a 9/16" pan head so that it can be reversed for exterior in-swing doors or for additional security.

Roton sexbolts are intentionally designed to be shorter than the door thickness for proper clamping action with doors of slightly varying thickness and gauge in the 1" to 2 1/2" range. Unless otherwise requested, bolts suitable for the 1 3/8" to 1 3/4" range will be shipped. Shorter or longer bolts may be requested. Bolts which are outside the door thickness range of 1" to 2 1/2" must be provided by the installer.

ROTON 780-053

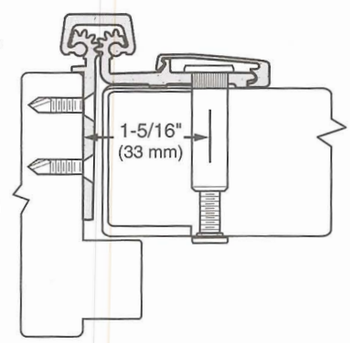

ROTON 780-210

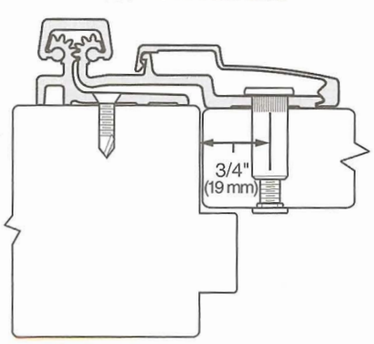

ROTON 780-155

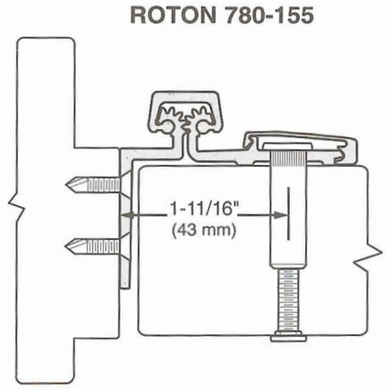

ROTON 780-157HD

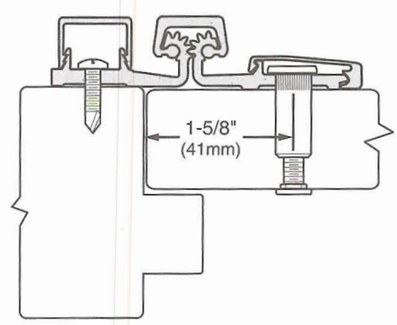

Roton General Information

Door and Frame Dimensioning — Half Surface Models

780-045, 780-045 HD, 780-046, 780-046 HD, 780-053, 780-053 HD, 780-054, 780-054 HD, 780-155, 780-211 HD, 780-213, 780-213 HD, 780-259, 780-259 HD, 780-300 HD

Designed primarily for work involving new doors and frames, one leaf concealed and one leaf surface mounted. They can also be used on retrofit work where a) a new door can be ordered to fit an existing frame, b) if the existing door is made of wood and can be reduced in size to accommodate the 5/16" hinge thickness, c) the frame is to be replaced and can be furnished with an oversized header.

Clearance required as follows:

Single Doors (Square Edged)

	STANDARD		METRIC
A. Hinge Thickness	1/8"	(4/32")	3.2 mm
B. Additional allowance for frame irregularities	1/32"	(1/32")	0.8 mm
C. Lockside clearance for single door	1/8"	(4/32")	3.2 mm
	Total	9/32"	7.2 mm

Single Doors (Beveled Edged)

A. Hinge Thickness	1/8"	(4/32")	3.2 mm
B. Additional allowance for frame irregularities	1/32"	(1/32")	0.8 mm
C. Lockside clearance for single door	1/8"	(4/32")	3.2 mm
D. Allowance for beveled edge	1/32"	(1/32")	0.8 mm
	Total	10/32"	8.0 mm

Pairs of Doors (Square Edged)

A. Hinge Thickness	1/8"	(4/32")	3.2 mm
B. Additional allowance for frame irregularities	1/32"	(1/32")	0.8 mm
C. Edge to edge clearance (recommended)	3/16"	(6/32")	4.8 mm
D. Second allowance for frame irregularities	1/32"	(1/32")	0.8 mm
E. Second hinge thickness	1/8"	(4/32")	3.2 mm
	Total	16/32"	12.8 mm

Pairs of Doors (Beveled Edged)

A. Hinge Thickness	1/8"	(4/32")	3.2 mm
B. Allowance for beveled edge	1/32"	(1/32")	0.8 mm
C. Additional allowance for frame irregularities	1/32"	(1/32")	0.8 mm
D. Edge to edge clearance (recommended)	3/16"	(6/32")	4.8 mm
E. Second allowance for frame irregularities	1/32"	(1/32")	0.8 mm
F. Second allowance for beveled edge	1/32"	(1/32")	0.8 mm
G. Second hinge thickness	1/8"	(4/32")	3.2 mm
	Total	18/32"	14.4 mm

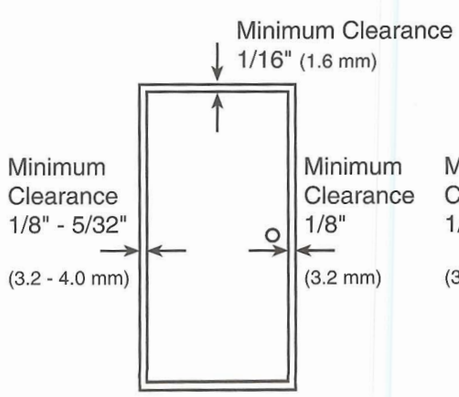

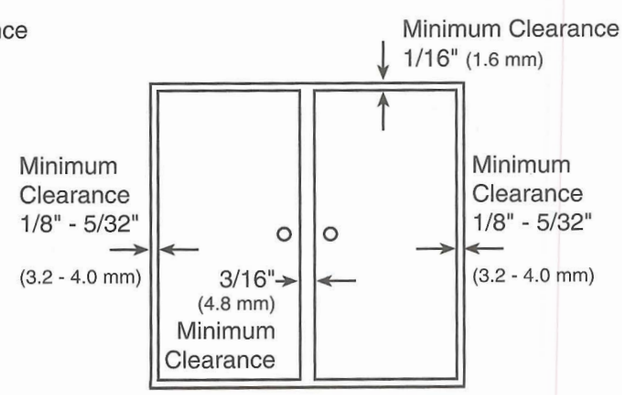

Roton General Information

Door and Frame Dimensioning — Fully Surface Models

780-057, 780-057 HD, 780-157, 780-157 HD, 780-210, 780-210 HD, 780-257 HD

The above models are designed for retrofit applications and require no special dimensioning. Full Surface models are designed to be mounted to the exposed surface of the door and frame. No additional clearance is required except for door and frame painting.

Single Doors (Square & Beveled Edge)

Clearance required as follows:	STANDARD		METRIC
A. Hinge Thickness	0"	(0")	0 mm
B. Additional allowance for door and frame painting (optional)	1/32"	(1/32")	0.8 mm
C. Lock side clearance for single door	1/8"	(4/32")	3.2 mm
	Total	5/32"	4.0 mm

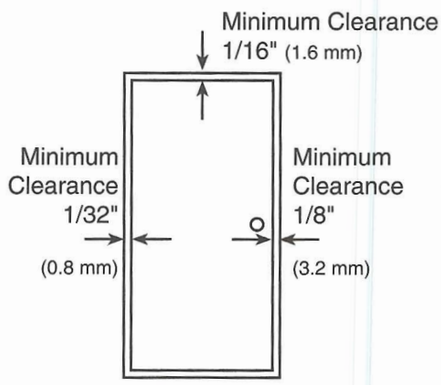

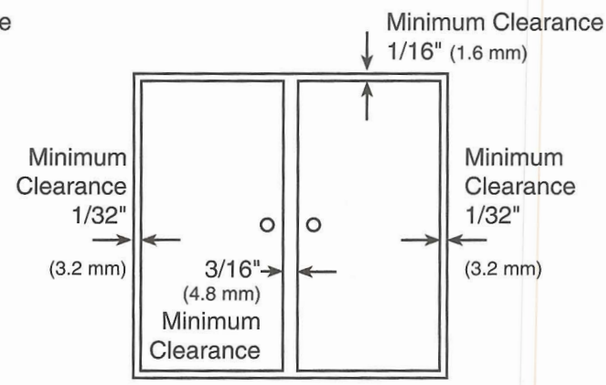

Note: Some minimal clearance may be required for paint and/or weatherstripping.

Pair of Doors (Square & Beveled Edge)

Clearance required as follows:	STANDARD		METRIC
A. Hinge Thickness	0"	(0")	0 mm
B. Additional allowance for frame irregularities	1/32"	(1/32")	0.8 mm
C. Edge to edge clearance (recommended)	3/16"	(6/32")	4.8 mm
D. Second allowance for frame irregularities	1/32"	(1/32")	0.8 mm
E. Second hinge thickness	0"	(0")	0 mm
	Total	8/32"	6.3 mm

Roton General Information

Door and Frame Dimensioning — Fully Concealed Models

750-134, 750-138, 780-041, 780-041 HD, 780-110, 780-110 HD, 780-111, 780-111 HD, 780-112, 780-112 HD, 780-112 LL, 780-224, 780-224 HD, 780-224 LL, 780-226, 780-226 HD, 780-226 LL

Designed primarily for work involving new doors and frames. These models have parallel, fully concealed leaves. They can also be used on retrofit work where: a) a new door can be ordered to fit an existing frame, b) if the existing door is made of wood and can be reduced in size to accommodate the 5/16" hinge thickness, c) the frame is to be replaced and can be furnished with an oversized header.

Clearance required as follows:

Single Doors (Square Edged)

	STANDARD		METRIC
A. Hinge Thickness	5/16"	(10/32")	8.0 mm
B. Additional allowance for frame irregularities	1/32"	(1/32")	0.8 mm
C. Lockside clearance for single door	1/8"	(4/32")	3.2 mm
	Total	15/32"	12.0 mm

Single Doors (Beveled Edged)

A. Hinge Thickness	5/16"	(10/32")	8.0 mm
B. Additional allowance for frame irregularities	1/32"	(1/32")	0.8 mm
C. Lockside clearance for single door	1/8"	(4/32")	3.2 mm
D. Allowance for beveled edge	1/32"	(1/32")	0.8 mm
	Total	16/32"	12.8 mm

Pairs of Doors (Square Edged)

A. Hinge Thickness	5/16"	(10/32")	8.0 mm
B. Additional allowance for frame irregularities	1/32"	(1/32")	0.8 mm
C. Edge to edge clearance (recommended)	3/16"	(6/32")	4.8 mm
D. Second allowance for frame irregularities	1/32"	(1/32")	0.8 mm
E. Second hinge thickness	5/16"	(10/32")	8.0 mm
	Total	28/32"	22.4 mm

Pairs of Doors (Beveled Edged)

A. Hinge Thickness	5/16"	(10/32")	8.0 mm
B. Allowance for beveled edge	1/32"	(1/32")	0.8 mm
C. Additional allowance for frame irregularities	1/32"	(1/32")	0.8 mm
D. Edge to edge clearance (recommended)	3/16"	(6/32")	4.8 mm
E. Second allowance for frame irregularities	1/32"	(1/32")	0.8 mm
F. Second allowance for beveled edge	1/32"	(1/32")	0.8 mm
G. Second hinge thickness	5/16"	(10/32")	8.0 mm
	Total	30/32"	24 mm

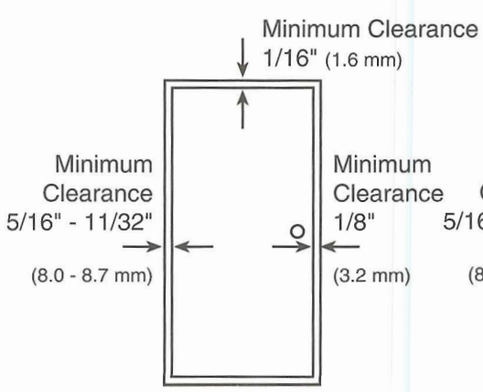

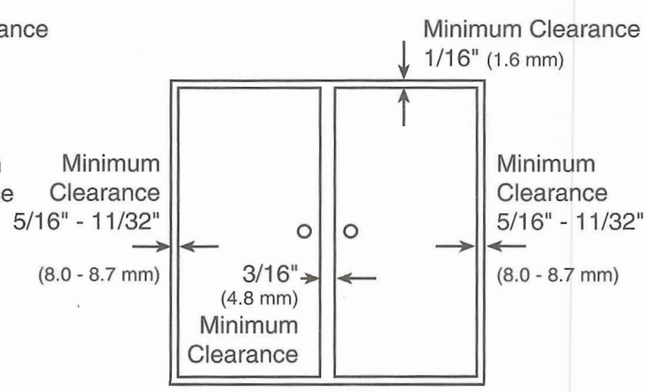

rev. 7/02

"EVERYTHING HINGES ON HAGER"

Roton General Information

PREPARATION

All Roton Hinges are surface-applied without cutouts. Cutout design and spacing coordination is thereby eliminated in both new construction and restoration work. Reinforcement plates are not required in doors or frames except where the gauge is too thin for the fasteners in relation to the door weight or where abusive operation is anticipated. Consult the factory if there are any questions.

Blank frames may be ordered with strike prep only (or with a strike prep furnished on both sides to eliminate handing with any Roton model that will cover the frame rabbet). Doors should always be ordered without cutouts except for use in labeled openings in which the tested door assembly may have manufacturing restrictions. Continuous frame mortar guards are desirable for masonry walls to avoid screw fastener interference with the mortar. An effective mortar guard made from an ordinary 1" x 2" stud, fastened to the back side of the frame has also been used. Check with both the frame supplier and the contractor for the best method.

CLOSERS

The main cause of door and frame breakdown is "kickback shock" transferred to conventional butt hinges or pivots. Roton bonds the door frame into a single, integrated unit, dissipating impact loads harmlessly.

Conventional surface or concealed sliding closers may be used with Roton. (Note: Pivot type floor closers with a fixed, conflicting pivot point may not be used). Closers will last considerably longer, adjust to operating requirements more readily and show consistent settings between similar doors because of the reduced operating forces of Roton Hinging.

SPECIAL PRODUCTS

1. **Extra Long Hinges:** Roton manufactures hinges over 119" long as two separate lengths with a staggered joint for on-site connection. Roton will select hinge segment lengths from standard sizes for best economics in relation to quantity required. Handing specifications are required to position the cuts inconspicuously.

2. **Dutch Door Hinges:** Roton will prepare any of its hinge models for dutch door application. The frame leaf is furnished as a continuous extrusion and the door leaf is cut to fit the dutch door heights specified. Upper and lower door leaves are prepped for extra screws. Handing, overall net door height, amount of clearance between the top and bottom doors, their individual heights and door and frame materials should be clearly specified.

3. **Custom Cabinet Hinges:** Please refer to Hager's 500 Series catalog for all information on the 500 Series Cabinet style Roton hinges. All hinges in the 500 series are considered special products. They are furnished in the required length for installation. Bearing location and quantity, fastener preparation, finishing, etc. are all based upon application. Submission of drawings or sketches is appreciated.

ELECTRIC MODIFICATIONS

Von Duprin - EPT 2 or EPT 10 - Electric Power Transfer Preparation

- Hinge leaf cutout to accomodate power transfer device.
- Specify handing and the dimension from the top of the continuous geared hinge to the centerline of the power transfer location. Please note the clearance from the top of the hinge to the top of the header, typically 1/16" to 1/8".

Fully Concealed Models
(780-110, 780-110 HD, 780-111, 780-111 HD, 780-112, 780-112 HD, 780-112 LL, 780-224, 780-224 HD, 780-224 LL, 780-226, 780-226 HD, 780-226 LL)
Half Surface Models
(780-053, 780-054, 780-155, 780-046, 780-211HD)

Standard Locations:

79"	24-1/2"
83"	28-7/16"
85"	30-7/16"
95"	40-1/2"
119"	64-3/8"

Mortar Box - 430

- Serves as a mortar shield.
- Overall dimension: 9" (229 mm) length w/tabs, 7" (178 mm) inside, 1-3/4" x 1-3/4" (45 x 45 mm) inside dimension.
- Galvanized steel .040".
- Knockouts top and bottom for standard conduit fittings.

Roton General Information

HAGER COMPANIES

ELECTRIC HINGE MODIFICATIONS

Exposed Electric Contacts:

- Transfers power to door in closed position.
- To order, use symbol "E" plus the number of contact required as a suffix.
- Must have at least two (2) pairs of contacts to transfer power.
- Example: 780-112 HD 85" Clear E4
- Specify handing and the dimension from the top of the continuous hinge to the centerline of the electric contact cluster location. Please note the clearance from the top of the hinge to the top of the header, typically 1/16" to 1/8".
- Templates regarding location of contacts, available upon request.
  Available on the following models only:
  (750-134, 750-138, 780-041 HD, 780-110, 780-110 HD, 780-111, 780-111 HD, 780-112, 780-112 HD, 780-112 LL, 780-224, 780-224 HD, 780-224 LL, 780-226, 780-226 HD, 780-226 LL)

Exposed Electric Switches:

- Miniature push button switch is incorporated in the hinge frame leaf to monitor position of the door.
- Three 22 gauge 12" wire leads.
- To order, use symbol "E1S" as a suffix.
- Each Monitoring hinge only needs one E1S switch
- Example: 780-112 HD 85" Clear E1S
- Specify handing and the dimension from the top of the continuous hinge to the centerline of each electric switch location. Please note the clearance from the top of the hinge to the top of the header, typically 1/16" to 1/8".
- Templates regarding location of contact switch(s) available upon request.
  Available on the following models only:
  (750-134, 750-138, 780-041 HD, 780-110, 780-110 HD, 780-111, 780-111 HD, 780-112, 780-112 HD, 780-112 LL, 780-224, 780-224 HD, 780-224 LL, 780-226, 780-226 HD, 780-226 LL)

Concealed Electric Through-Wire:

- Transfers power discretely from buildingto door hardware.
- Four, Six, Eight, or Ten 28 gauge 12" wire leads
- To order, use symbol "ETW" plus the number of wires required, as a suffix.
- Example: 780-112 HD 85" Clear ETW - 4
- Specify handing and the dimension from the top of the continuous hinge to the centerline of electric through-wire location. Please note the clearance from the top of the hinge to the top of the header, typically 1/16" to 1/8".
- Templates regarding location of through wires, available upon request.
  Available on the following models only:
  (780-110, 780-110 HD, 780-111, 780-111 HD, 780-112, 780-112 HD, 780-112 LL, 780-224, 780-224 HD, 780-224 LL, 780-226, 780-226 HD, 780-226 LL)

Standard Locations:

Height	Std. Duty	Hvy. Duty
79"	.40"	.38-3/4"
83"	.42-3/4"	.44"
85"	.46"	.44-3/4"
95"	.56"	.56"
119"	.80"	.80"

Concealed Electric Monitoring:

- Miniature switch is incorporated into the frame leaf.
- Three 24 gauge 12" wire leads
- To order, use symbol "EMN", as a suffix.
- Example: 780-224 HD 119" Bronze EMN
- Specify handing and the dimension from the top of the continuous hinge to the centerline of electric monitoring location. Please note the clearance from the top of the hinge to the top of the header, typically 1/16" to 1/8".
- Templates regarding location of monitoring switch, available upon request.
  Available on the following models only:
  (780-110, 780-110 HD, 780-111, 780-111 HD, 780-112, 780-112 HD, 780-112 LL, 780-224, 780-224 HD, 780-224 LL, 780-226, 780-226 HD, 780-226 LL)

Concealed Electric Through-Wire and Monitoring:

- This combines the continuous electric conductors and the miniature switch to provide both power transfer and monitoring.
- Example: 780-224 LL 85" Bronze ETM - 4
- Standard wire leads 12" per side. Additional wire leads are available 4 wire, 6 wire, 8 wire, or 10 wire.
- Specify handing and the dimension from the top of the continuous hinge to the centerline of each electric modification location. Please note the clearance from the top of the hinge to the top of the header, typically 1/16" to 1/8".
- Templates regarding location of monitoring switch, available upon request.
  Available on the following models only:
  (780-110, 780-110 HD, 780-111, 780-111 HD, 780-112, 780-112 HD, 780-112 LL, 780-224, 780-224 HD, 780-224 LL, 780-226, 780-226 HD, 780-226 LL)

Note: Please feel free to contact the Hager sales office for further information pertaining to electric modifications.

Roton General Information

INSTALLATION AIDS

Marking Jigs

Marking jigs are available to locate the centers of the top end frame screws. These jigs must be ordered at the same time as the hinges to insure fabrication accuracy.

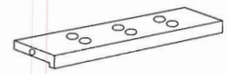

Center Punches

Self-Centering center punches are available for #12 Countersunk screws supplied. To make sure screw heads seat properly, accurate center punching is required.

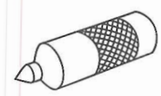

Shim Stock

For clearance between the door and frame which may be excessive, a continuous shim is helpful (applied behind the frame leaf only). Anodized aluminum extrusions are supplied with no holes.

1/16" x 1 1/2" Wide x 7' Long

1/8" x 1 1/2" Wide x 7' Long

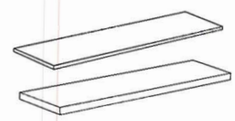

Item Marking

Marking and special packaging for job-site identification.

Installation Mini-CD ROM

Presents actual installation of 780-210, approximately 8 minutes in length. Very helpful in the education of installers.

ADDITIONAL ITEMS

Polished Cover Channels

Any 750 or 780 series hinge may be ordered with a polished clear cover channel (similar to US26) to compliment clear anodized hinge leaves or a polished gold cover channel (similar to US3) to compliment satin gold anodized hinge leaves.

Special Cover Channels

Special covers for striping effects or decorative moldings may be ordered with any Roton hinge. Custom extruded aluminum cover channels can be fabricated to suit your needs – contact Hager Customer Service!

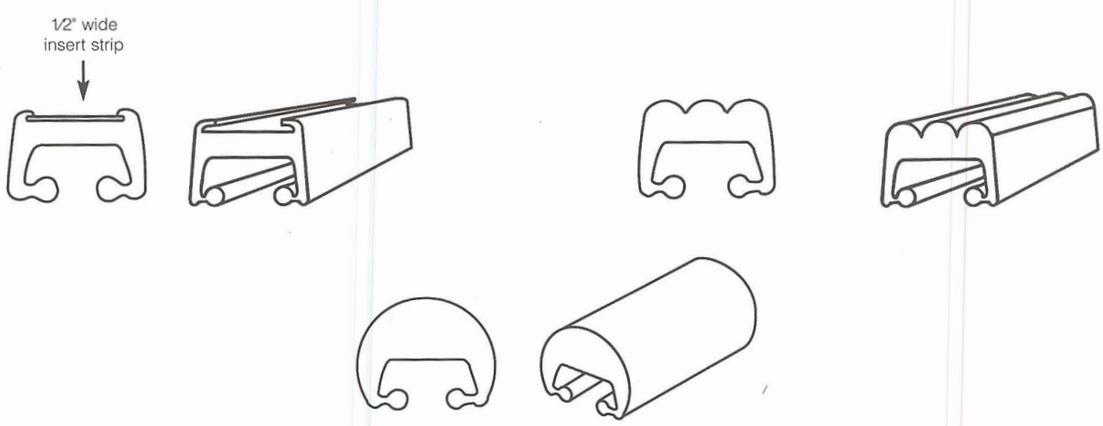

Roton General Information

REPLACEMENT MOLDINGS

780-210M

Replacement door leaf molding for 780-210 (HD), 780-211 (HD), 780-213 (HD), 780-045 (HD), 780-046 (HD). Furnished with Allen head set screw and wrench. Shipped in stock lengths for trimming in the field.

780-247M

Replacement frame leaf molding for 780-157 (HD), 780-257 (HD). Shipped in stock lengths for trimming in the field.

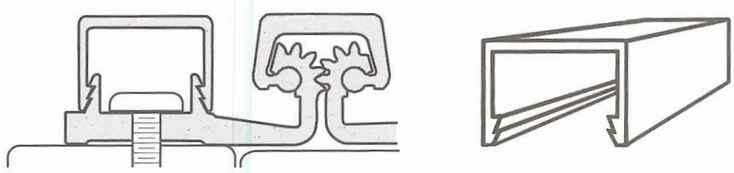

780-052M

Replacement door leaf molding for 780-053 (HD), 780-054 (HD), 780-155 (HD), 780-057 (HD), 780-157 (HD), 780-257 (HD), 780-259 (HD). Furnished with Allen head set screw and wrench. Shipped in stock lengths for trimming in the field.

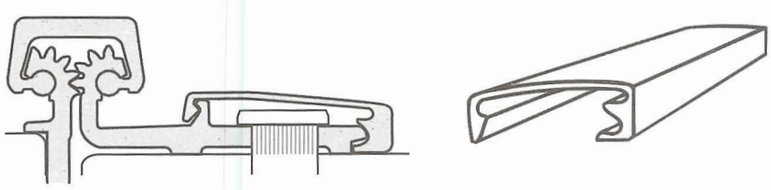

Roton General Information

ROTON ARCHITECTURAL SPECIFICATION – NON-FIRE RATED

Door hanging system is to be Hager's ROTON Continuous Hinge manufactured of 6063-T6 anodized aluminum, non-handed and anodized as required by design. Hinges shall be manufactured of three interlocking components, two hinge leaves and one cover channel. The door leaf and jamb leaf shall be geared together for the entire length of the hinge, and joined by a cover channel. The pinless assembly of three interlocking extrusions shall be applied to the full height of the door and frame without mortising. All unexposed working metal surfaces shall be coated with TFE dry lubricant. Vertical door loads shall be carried on Lubriloy™ RL bearings through a full 180° opening; no other substitute material will be accepted. Standard Duty Continuous Geared Hinges, up to 83", shall have 16 each bearings; Heavy Duty and Lead Lined Duty Hinges, up to 83", shall have 32 each bearings. Hinges of greater length will have proportionately greater numbers of bearings. Bearings are to be completely concealed in the cover channel. Hinge cover channel is to be monolithic in appearance and withstand 7000 foot pounds of pull apart pressure. Hinges with visible knuckle separations are not acceptable. Six screw holes shall be concentrated at each end of the hinge and additional screws are proportionately spaced along the full length of the hinge. Self-Drilling (Teks Point), hardened and plated steel fasteners 12-24 x 11/16", flat head undercut, Phillips head screws are to be furnished. All aluminum components are to be anodized in accordance with 202-R1 (AA-M12C22A21) Clear or 204-R1 (AA-M12C22A34) Dark Bronze, or as required by design. All fire rated hinges shall carry Underwriters Laboratory Inc. certification, up to and including all 90 minute applications for wood doors, as well as 3 hour applications for all fire rated hollow metal doors. Fully Concealed type hinges shall not require any special pins or studs for any type of fire ratings up to and including 90 minute hollow metal door and hollow metal frame applications. Stainless Steel studs are required for Fully Concealed models on wood door and hollow metal frames rated at 90 minutes and for 3 hour Fire Rated hollow metal doors and frames. At the time of this writing, the ANSI Standard for Continuous Geared Hinges is under development. The completion date for this document is estimated to be approximately 2000/2001.

Note: Fire rated bearings – Celanex 2012

Notes