Roton Half Surface

Door of any Material • Standard and Heavy Duty

Standard Duty for medium frequency doors. To determine weight factors for Standard or Heavy Duty frequency doors, see section "Checking the load" on page C9. Heavy Duty for high frequency doors or heavy medium frequency doors.

780-045
780-045 HD

- CLEARANCE: 5/32" (4 mm) frame leaf clearance (1/8" (3 mm) minimum) plus standard lockside clearance
- FASTENERS: Dril-Kwick® screws and Sexbolts
- LENGTH OPTIONS: Standard and Custom
- DOOR REINFORCEMENT: None required
- FRAME REINFORCEMENT: None required to 200 lbs. Use 16 gauge channel at higher weight.
- SPECIAL FEATURES: Frame leaf alignment rib for proper hinge location. 9/32" (7 mm) inset Security moldings

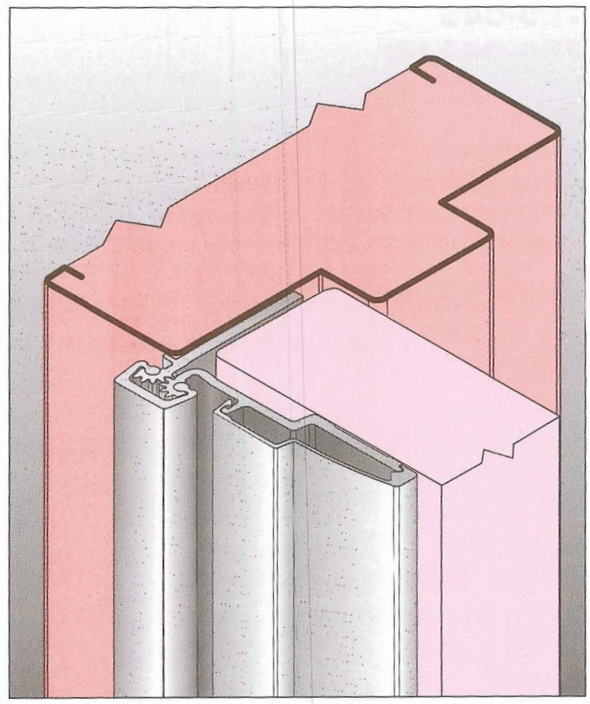

Roton model number	Length		Hole Count		
	Inches	Centimeters	# Sex bolts	# Pan Head	# for jamb
780-045	79	200.7	6	11	15
780-045	83	210.8	6	13	19
780-045	85	215.9	6	13	19
780-045	95	241.3	7	12	19
780-045	119	302.3	8	15	21
780-045HD	79	200.7	8	17	15
780-045HD	83	210.8	8	19	19
780-045HD	85	215.9	8	19	19
780-045HD	95	241.3	9	20	19
780-045HD	119	302.3	10	26	21

0° OPENING

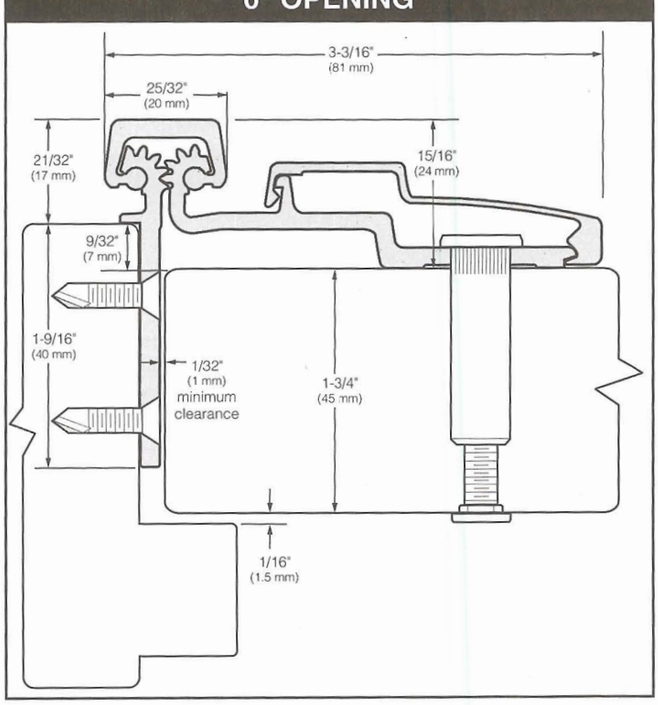

90° OPENING

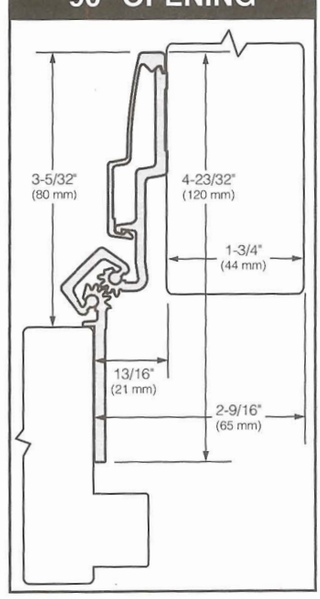

180° OPENING

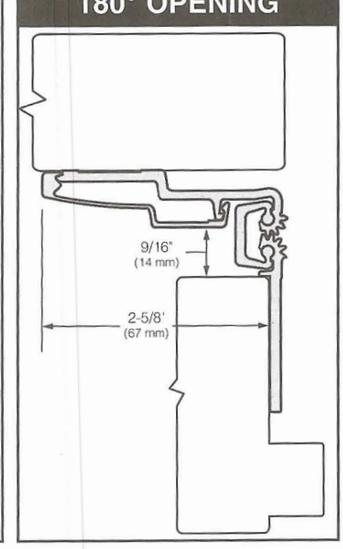

Roton Half Surface

Door of any Material • Standard and Heavy Duty

Standard Duty for medium frequency doors. To determine weight factors for Standard or Heavy Duty frequency doors, see section "Checking the load" on page C9. Heavy Duty for high frequency doors or heavy medium frequency doors.

780-046
780-046 HD

- CLEARANCE: 5/32" (4 mm) frame leaf clearance (1/8" (3 mm) minimum) plus standard lockside clearance
- FASTENERS: Dril-Kwick® screws and Sexbolts
- LENGTH OPTIONS: Standard and Custom
- DOOR REINFORCEMENT: None required
- FRAME REINFORCEMENT: None required to 200 lbs. Use 16 gauge channel at higher weight.
- SPECIAL FEATURES: Complete frame rabbet coverage for 1-3/4" (45 mm) frames, with 1-3/8" doors
  Frame leaf alignment rib for proper hinge location.
  9/32" (7 mm) inset
  Security moldings

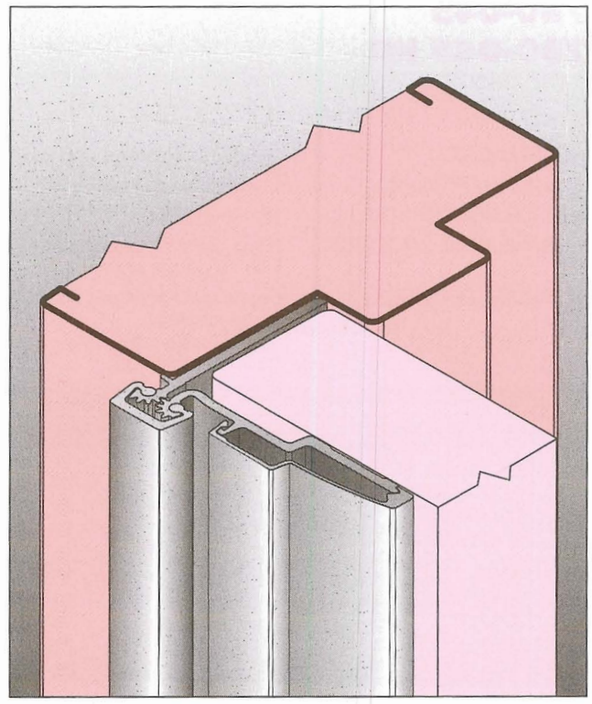

Roton model number	Length		Hole Count		
	Inches	Centimeters	# Sex bolts	# Pan Head	# for jamb
780-046	79	200.7	6	11	15
780-046	83	210.8	6	13	19
780-046	85	215.9	6	13	19
780-046	95	241.3	7	12	19
780-046	119	302.3	8	15	21
780-046HD	79	200.7	8	17	15
780-046HD	83	210.8	8	19	19
780-046HD	85	215.9	8	19	19
780-046HD	95	241.3	9	20	19
780-046HD	119	302.3	10	26	21

0° OPENING

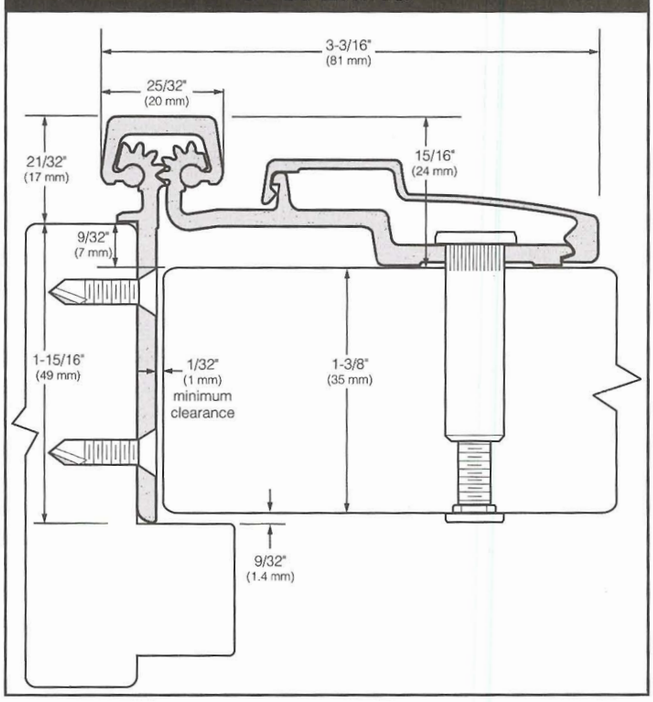

90° OPENING

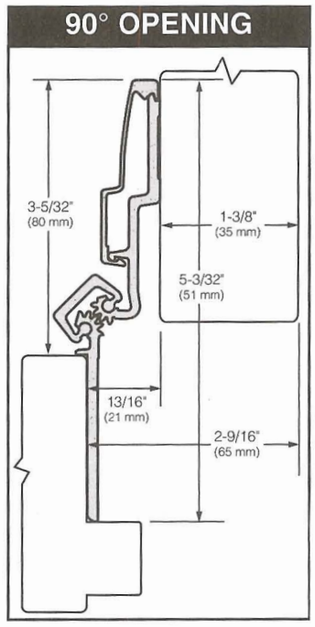

180° OPENING

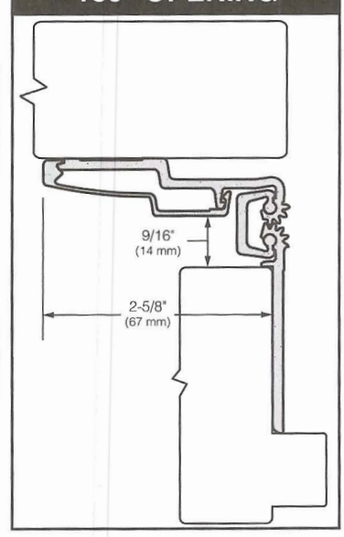

rev. 7/02

"EVERYTHING HINGES ON HAGER"

Roton Half Surface

Door of any Material • Standard and Heavy Duty

Standard Duty for medium frequency 1-3/4" (45 mm) or 1-3/8" (35 mm) doors. To determine weight factors for Standard or Heavy Duty frequency doors, see section "Checking the load" on page C9. Heavy Duty for high frequency doors or heavy medium frequency doors.

780-053
780-053 HD

- CLEARANCE: 5/32" (4 mm) frame leaf clearance (1/8" (3 mm) minimum) plus standard lockside clearance
- FASTENERS: Dril-Kwick® screws and Sexbolts
- LENGTH OPTIONS: Standard and Custom
- DOOR REINFORCEMENT: None required
- FRAME REINFORCEMENT: None required to 200 lbs. Use 16 gauge channel at higher weight.

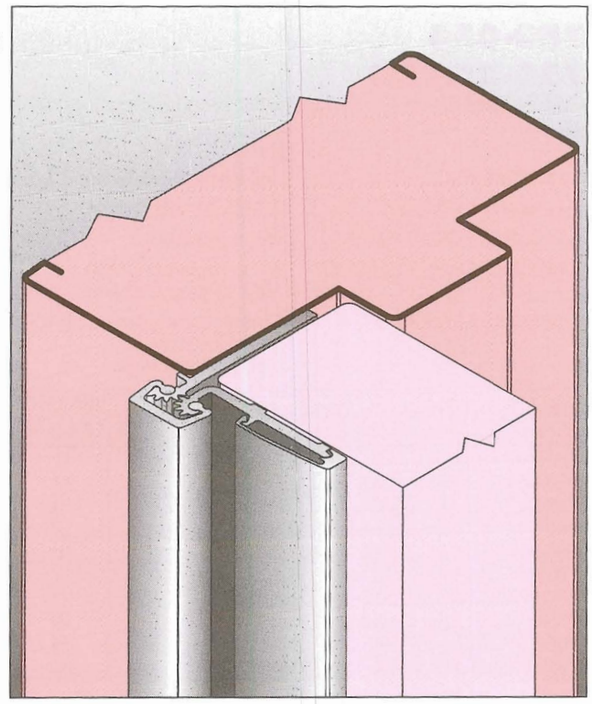

Roton model number	Length		Hole Count		
	Inches	Centimeters	# Sex bolts	# Pan Head	# for jamb
780-053	79	200.7	6	11	15
780-053	83	210.8	6	13	19
780-053	85	215.9	6	13	19
780-053	95	241.3	7	12	19
780-053	119	302.3	8	15	21
780-053HD	79	200.7	8	17	15
780-053HD	83	210.8	8	19	19
780-053HD	85	215.9	8	19	19
780-053HD	95	241.3	9	20	19
780-053HD	119	302.3	10	26	21

0° OPENING

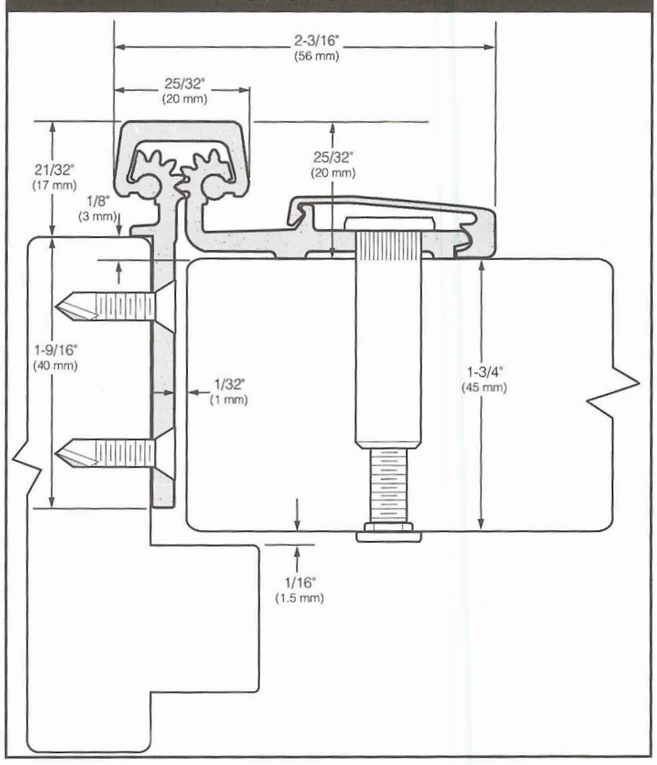

90° OPENING

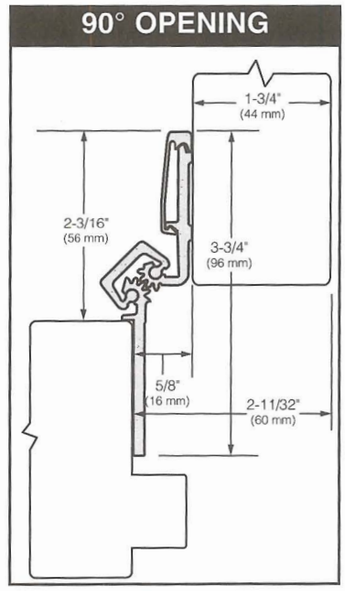

180° OPENING

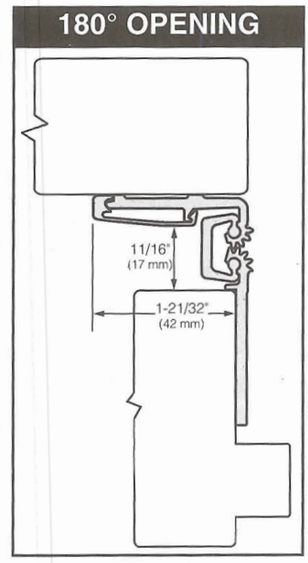

Roton Half Surface

Door of any Material • Standard and Heavy Duty

Standard Duty for medium frequency 1-3/4" (45 mm) doors. To determine weight factors for Standard or Heavy Duty frequency doors, see section "Checking the load" on page C9. Heavy Duty for high frequency doors or heavy medium frequency doors.

780-054
780-054 HD

- CLEARANCE: 5/32" (4 mm) frame leaf clearance (1/8" (3 mm) minimum) plus standard lockside clearance
- FASTENERS: Dril-Kwick® screws and Sexbolts
- LENGTH OPTIONS: Standard and Custom
- DOOR REINFORCEMENT: None required
- FRAME REINFORCEMENT: None required to 200 lbs. Use 16 gauge channel at higher weight.
- SPECIAL FEATURES: Frame leaf alignment rib for proper hinge location. Security moldings

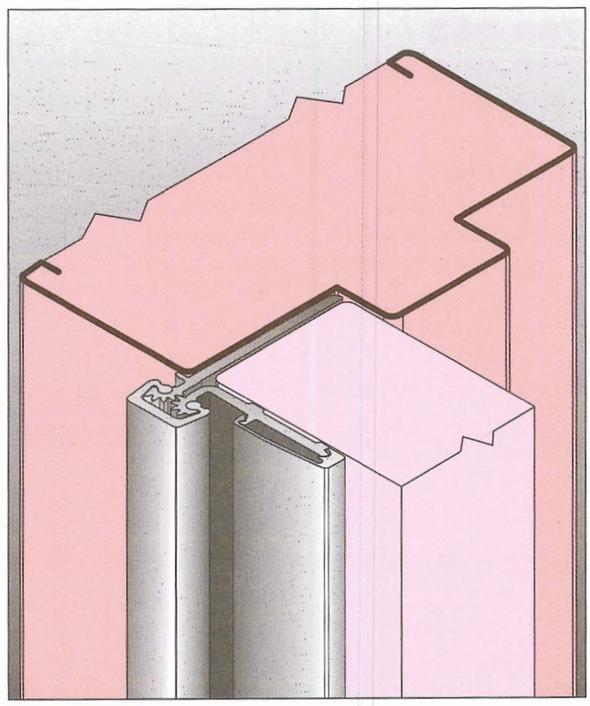

Roton model number	Length		Hole Count		
	Inches	Centimeters	# Sex bolts	# Pan Head	# for jamb
780-054	79	200.7	6	11	15
780-054	83	210.8	6	13	19
780-054	85	215.9	6	13	19
780-054	95	241.3	7	12	19
780-054	119	302.3	8	15	21
780-054HD	79	200.7	8	17	15
780-054HD	83	210.8	8	19	19
780-054HD	85	215.9	8	19	19
780-054HD	95	241.3	9	20	19
780-054HD	119	302.3	10	26	21

0° OPENING

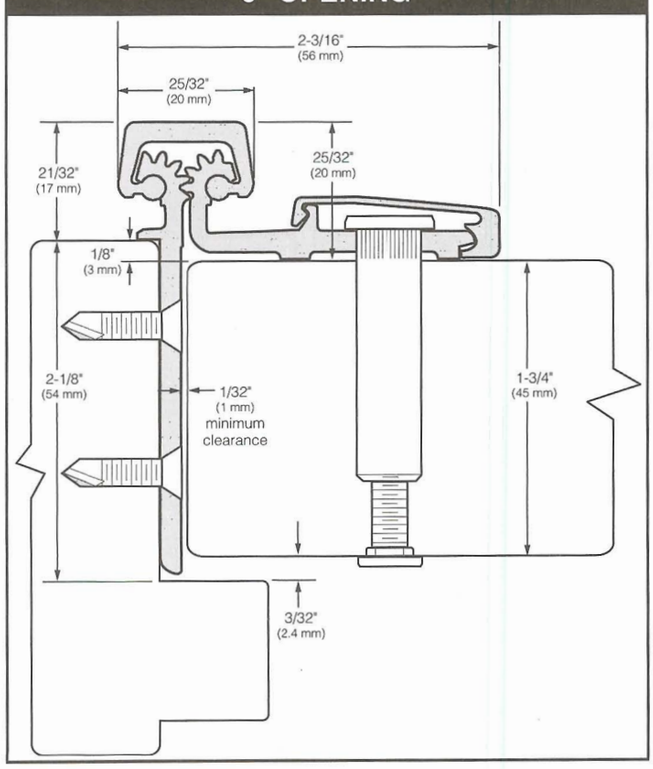

90° OPENING

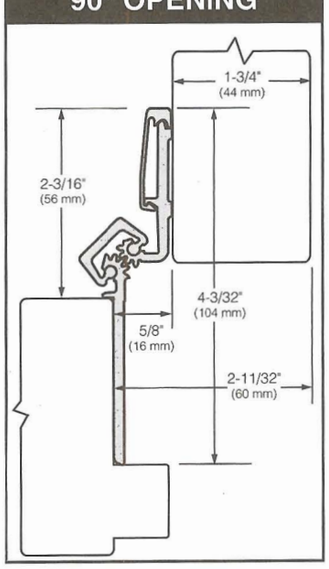

180° OPENING

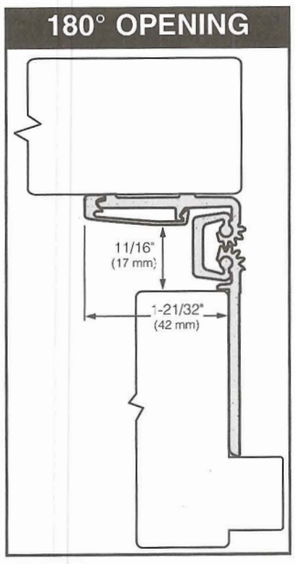

PH. 1-800-325-9995 or 1-314-772-4400 • Fax 1-800-782-0149 or 1-314-772-0744

rev. 7/02

"EVERYTHING HINGES ON HAGER"

Roton Half Surface

Door of any Material • Standard and Heavy Duty

Standard Duty for medium frequency doors. To determine weight factors for Standard or Heavy Duty frequency doors, see section "Checking the load" on page C9. Heavy Duty for high frequency doors or heavy medium frequency doors.

780-155
780-155 HD

- CLEARANCE: 5/32" (4 mm) frame leaf clearance (1/8" (3 mm) minimum) plus standard lockside clearance
- FASTENERS: Dril-Kwick® screws and Sexbolts
- LENGTH OPTIONS: Standard and Custom
- DOOR REINFORCEMENT: None required
- FRAME REINFORCEMENT: None required to 200 lbs. Use 16 gauge channel at higher weight.
- SPECIAL FEATURES: For center hung and double egress conversions. Security moldings

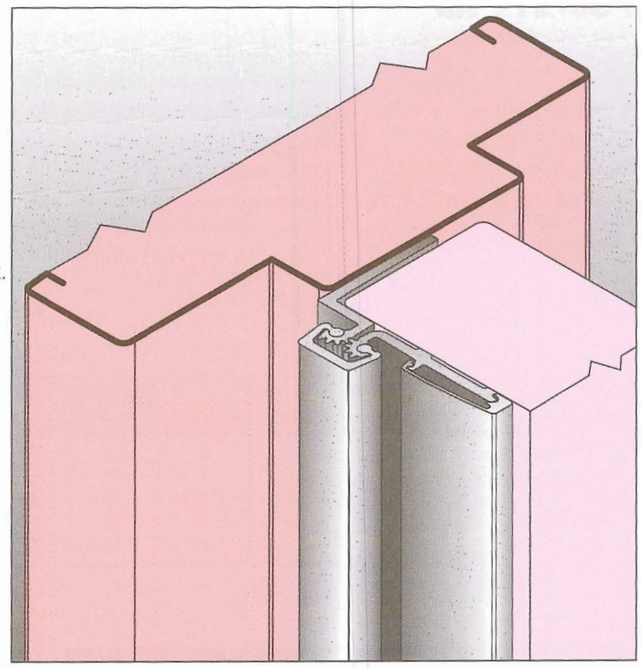

Roton model number	Length		Hole Count		
	Inches	Centimeters	# Sex bolts	# Pan Head	# for jamb
780-155	79	200.7	6	11	15
780-155	83	210.8	6	13	15
780-155	85	215.9	6	13	15
780-155	95	241.3	7	12	17
780-155	119	302.3	8	15	19
780-155HD	79	200.7	8	17	23
780-155HD	83	210.8	8	19	23
780-155HD	85	215.9	8	19	23
780-155HD	95	241.3	9	20	26
780-155HD	119	302.3	10	26	30

0° OPENING

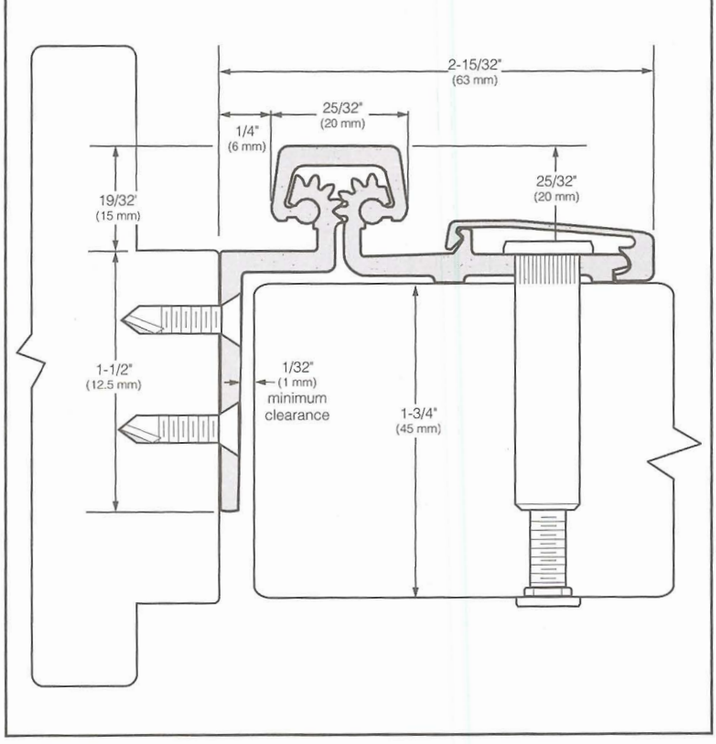

90° OPENING

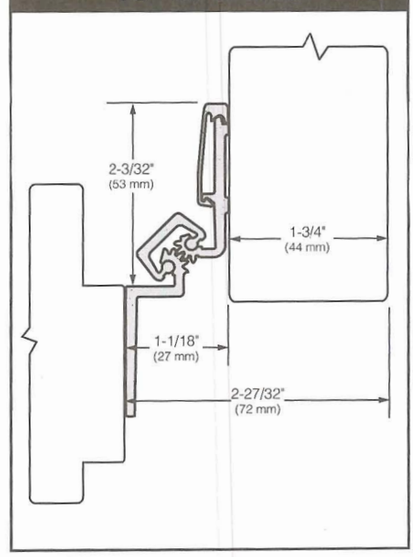

Roton Half Surface

Door of any Material • Heavy Duty

Heavy Duty for high frequency doors or heavy medium frequency doors. . To determine weight factors for Standard or Heavy Duty frequency doors, see section "Checking the load" on page C9.

780-211 HD

- CLEARANCE: 5/32" (4 mm) frame leaf clearance (1/8" (3 mm) minimum) plus standard lockside clearance
- FASTENERS: Dril-Kwick® screws and Sexbolts
- LENGTH OPTIONS: Standard and Custom
- DOOR REINFORCEMENT: None required
- FRAME REINFORCEMENT: None required to 200 lbs. Use 16 gauge channel at higher weight.
- SPECIAL FEATURES: Frame leaf wrap-around reinforcement for damaged frames. Security moldings

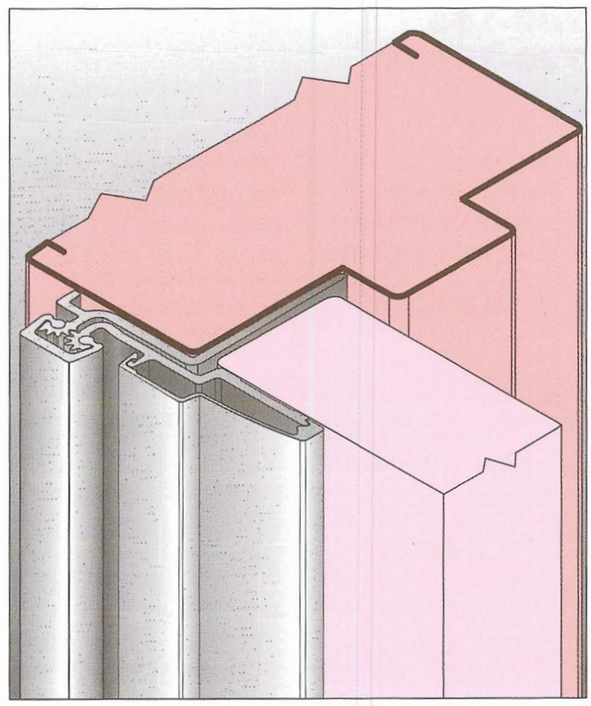

Roton model number	Length		Hole Count		
	Inches	Centimeters	# Sex bolts	# Pan Head	# for jamb
780-053HD	79	200.7	8	17	15
780-053HD	83	210.8	8	19	19
780-053HD	85	215.9	8	19	19
780-053HD	95	241.3	9	20	19
780-053HD	119	302.3	10	26	21

0° OPENING

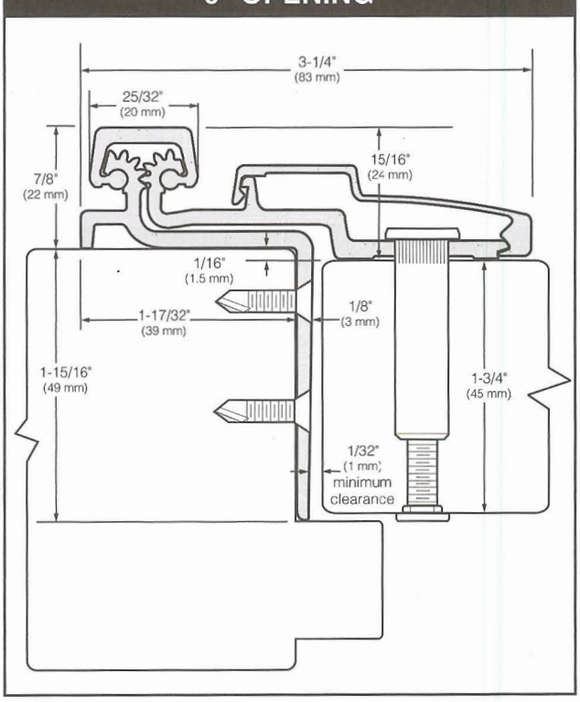

90° OPENING

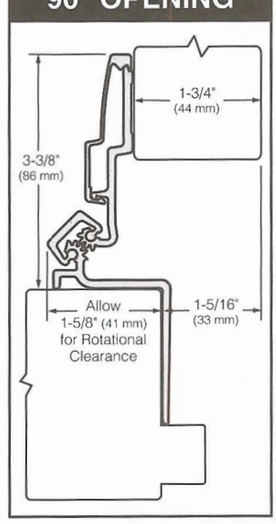

180° OPENING

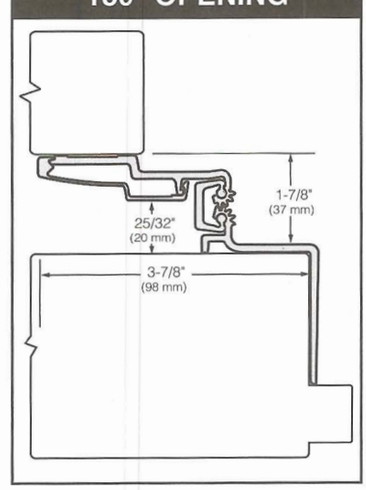

PH. 1-800-325-9995 or 1-314-772-4400 • Fax 1-800-782-0149 or 1-314-772-0744

rev. 7/02

"EVERYTHING HINGES ON HAGER"

Roton Half Surface

Door of any Material • Standard and Heavy Duty

Standard Duty for medium frequency doors. To determine weight factors for Standard or Heavy Duty frequency doors, see section "Checking the load" on page C9. Heavy Duty for high frequency doors or heavy medium frequency doors.

780-213
780-213 HD

- CLEARANCE: 5/32" (4 mm) frame leaf clearance (1/8" (3 mm) minimum) plus standard lockside clearance
- FASTENERS: Dril-Kwick® screws and Sexbolts
- LENGTH OPTIONS: Standard and Custom
- DOOR REINFORCEMENT: None required
- FRAME REINFORCEMENT: None required to 200 lbs. Use 16 gauge channel at higher weight.
- SPECIAL FEATURES: For center hung door where large edge radii or finger guards require a long reach. Security moldings

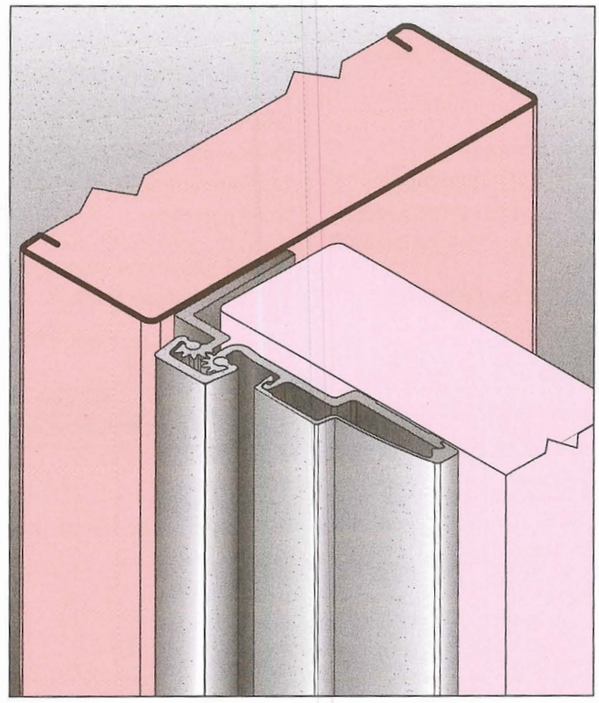

Roton model number	Length		Hole Count		
	Inches	Centimeters	# Sex bolts	# Pan Head	# for jamb
780-213	79	200.7	6	11	15
780-213	83	210.8	6	13	15
780-213	85	215.9	6	13	15
780-213	95	241.3	7	12	17
780-213	119	302.3	8	15	19
780-213HD	79	200.7	8	17	23
780-213HD	83	210.8	8	19	23
780-213HD	85	215.9	8	19	23
780-213HD	95	241.3	9	20	26
780-213HD	119	302.3	10	26	30

0° OPENING

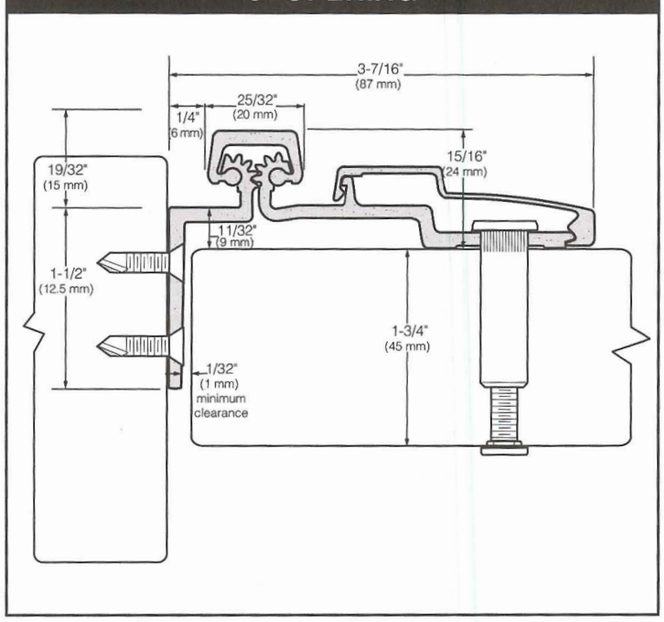

90° OPENING

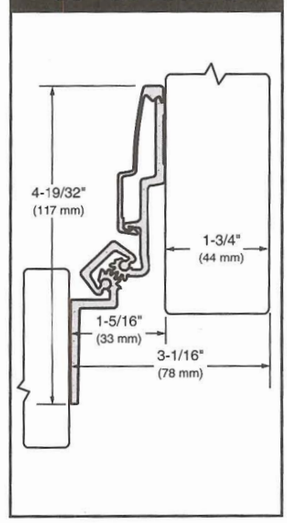

180° OPENING

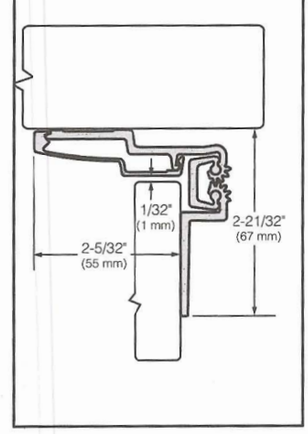

Roton Half Surface

Door of any Material • Standard and Heavy Duty

Standard Duty for medium frequency doors. To determine weight factors for Standard or Heavy Duty frequency doors, see section "Checking the load" on page C9. Heavy Duty for high frequency doors or heavy medium frequency doors.

780-259
780-259 HD

- CLEARANCE: 5/32" (4 mm) frame leaf clearance (1/8" (3 mm) minimum) plus standard lockside clearance
- FASTENERS: Dril-Kwick® screws and Sexbolts
- LENGTH OPTIONS: Standard and Custom
- DOOR REINFORCEMENT: None required
- FRAME REINFORCEMENT: None required to 200 lbs. Use 16 gauge channel at higher weight.
- SPECIAL FEATURES: Frame leaf alignment rib for proper hinge location. For millwork, toilet stalls, etc. Security moldings

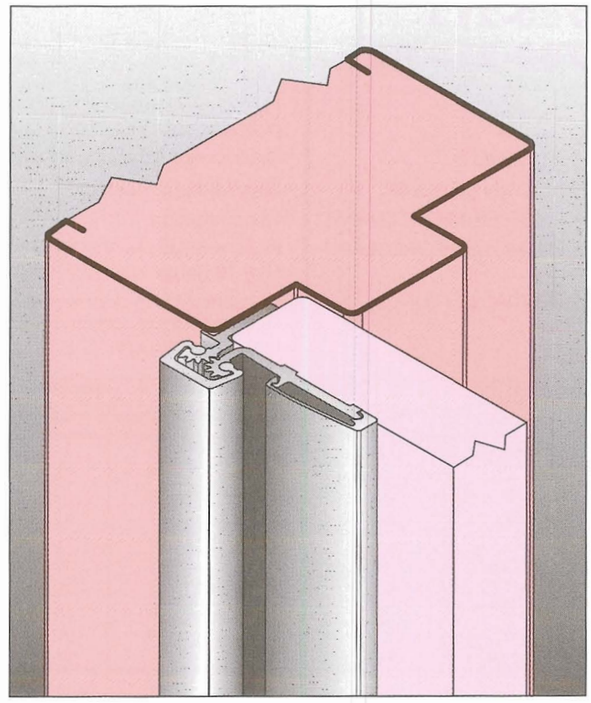

Roton model number	Length		Hole Count		
	Inches	Centimeters	# Sex bolts	# Pan Head	# for jamb
780-259	79	200.7	6	11	10
780-259	83	210.8	6	13	10
780-259	85	215.9	6	13	10
780-259	95	241.3	7	12	12
780-259	119	302.3	8	15	14
780-259HD	79	200.7	8	17	18
780-259HD	83	210.8	8	19	18
780-259HD	85	215.9	8	19	18
780-259HD	95	241.3	9	20	21
780-259HD	119	302.3	10	26	25

0° OPENING

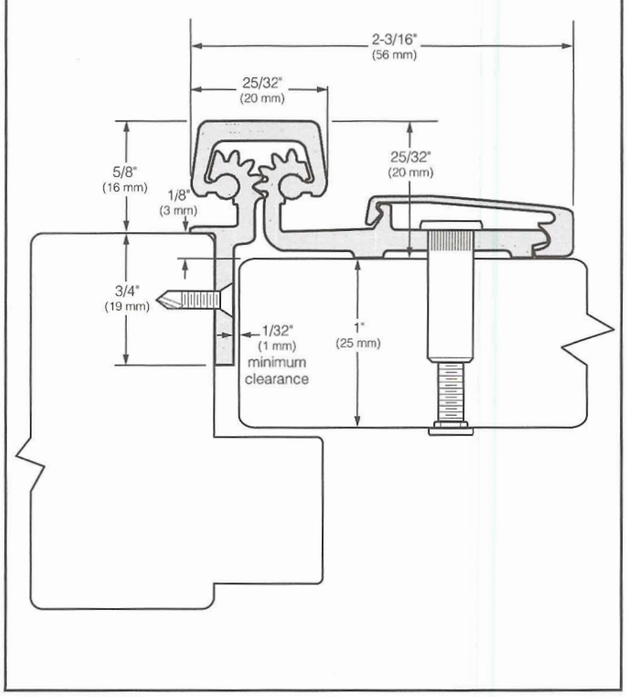

90° OPENING

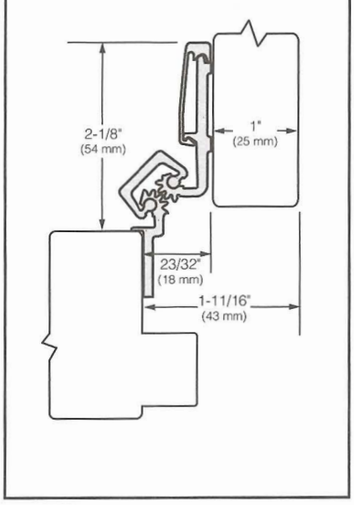

180° OPENING

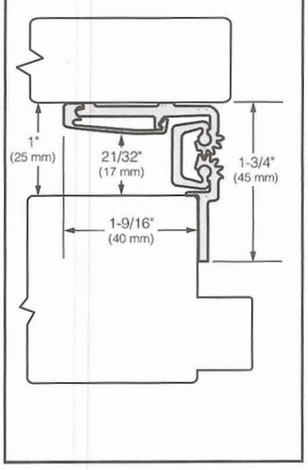

PH. 1-800-325-9995 or 1-314-772-4400 • Fax 1-800-782-0149 or 1-314-772-0744

rev. 7/02

"EVERYTHING HINGES ON HAGER"