ARCHITECTURAL HINGES ➤ TRIM & AUXILIARY HARDWARE ➤ SLIDING DOOR HARDWARE ➤ ROTON CONTINUOUS GEARED HINGES ➤ STAINLESS STEEL CONTINUOUS HINGES ➤ THRESHOLD & WEATHERSTRIPPING ➤ RESIDENTIAL HARDWARE

HAGER®
COMPANIES
ST. LOUIS, MISSOURI

THRESHOLD & WEATHERSTRIPPING

- Gasketing
- Sound Proofing
- Light Proofing

"THE FIRST FAMILY OF SUPERIOR HARDWARE"

rev. 7/02

Alphabetical Table of Contents

General Information	Page
Air/Smoke Tested	G5
Fabrication Options	G3
Fasteners	G4
Fire Labeling	G5
General Information	G3
Materials and Finishes	G4
Numerical Index to Parts	G6
Ordering Information	G3
Product Presentation	G3
Product Labeling	G3
Sound Tested	G5
UL Testing	G5
Thresholds	
Abrasive Cast Aluminum Thresholds	G19-G20
Bumper Strips	G11
Bumper Thresholds	G21
Carpet Thresholds	G21
Cover Plates	G13
Floor Plate Assembly Thresholds	G12-G13
Half Saddle Thresholds	G10-G11
Interlocking Thresholds	G17-G18
Panic Thresholds	G14-G16
Panic Thresholds, Thermal Barrier	G16
Residential Thresholds	G22
Saddle Thresholds	G7-G9
Saddle Thresholds, Thermal Barrier	G9
Threshold Anchor	G13
Threshold Cover Plate Assembles	G23
Weatherstripping	
Astragals/Meeting Stiles	G35-G37
Interlocking Weatherstripping	G32
Jamb Weatherstripping	G28-G30
Overhead Drip Guards	G37
Press-On Weatherstripping	G33-G34
Spring Bronze	G31
Door Bottoms	
Door Bottoms	G24-G26
Door Bottoms, Automatic	G26
Door Bottom Sweeps	G27
Stair Nosings	
Abrasive Cast Aluminum Nosings	G20
Intumescent Seals	
Press-on type	G33-G34

Product Presentation

Dimensions on bronze extrusions may differ slightly than those detailed. Questions regarding any dimensions should be directed to Hager Companies.

Product Labeling

Gasketing materials for fire doors classified by Underwriters Laboratories, Inc. are intended for application to steel covered composite and hollow metal type fire door rated up to 3 hours and wood covered composite and wood core doors rated up to 1/2 hours. For installation on other rated doors, contact your local sales representative.

Ordering Information

When ordering, please specify by product number, length, quantity, finish and fasteners required. Thresholds and weatherstripping are fabricated in standard sizes with ½" extra on thresholds 50" and under. Thresholds over 50" are supplied with 1" extra length for fitting. Exact lengths are available upon request. All lengths over 12 feet must be purchased and are billed at 15 feet.
All thresholds must be purchased and are billed at 4" increments except abrasive cast aluminum thresholds & auto door bottoms. Weatherstripping must be purchased and is billed at 4" increments, 42" & 86" sizes excluded.

EXAMPLE: 891S D V 36 x 84

Item #	Finish	Gasketing	Size
412S	A-mill finish aluminum	B-nylon brush	36"
520S	B-polished bronze (brass)	N-neoprene, etc.	48"
774S	C-cast aluminum	S-silicone	72"
750S	D-dark bronze anodized aluminum	V-vinyl	36" x 84"
891S	E-Hager Sure Step on aluminum	W-pile	48" x 96"
etc.	etc.	etc.	etc.

Fabrication Options

Bevel One Edge Threshold
Rip One Edge Width of Threshold
L-Notch Both Ends of Threshold
U-Notch Both Ends of Threshold
Miter Single One End of Threshold
Miter Single Both Ends of Threshold
Miter Double One End of Threshold
Miter Double Both Ends of Threshold
Tack Weld One Line of Threshold
Pan for Water Return Threshold
Sure Step Anti-Skid Abrasive Finish – A rugged, durable coating that can be applied to all Hager's metal thresholds. Ideal for thresholds being used in wet, oily, or corrosive environments.

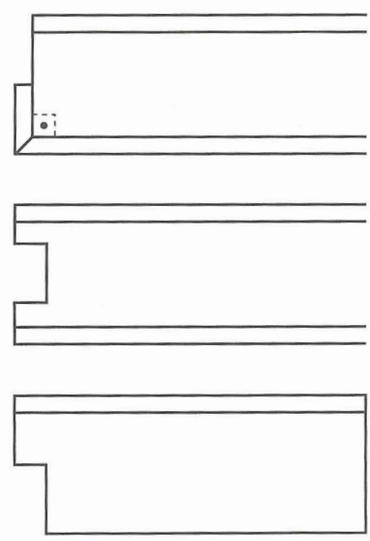

Materials & Finishes

METALS All aluminum extrusions are of alloy 6063-T5. All bronze extrusions are of alloy CDA385 brass specified as Architectural Bronze in the industry.

For stock finishes, refer to the code listed below each individual item throughout the catalog. Please inquire for the availability on non-stock finishes.

A - mill finish aluminum
B - polished bronze
C - cast aluminum
D - dark bronze anodized aluminum
E - Hager Sure Step on aluminum
F - Hager Sure Step on bronze
G - gold anodized aluminum
K - antique bronze, oiled (10B)
L - light bronze anodized aluminum
M - mill finish bronze
P - primed steel grey
R - black anodized aluminum
S - stainless steel (non-extruded)
W - white paint on aluminum
X - clear anodized aluminum
Z - polished aluminum

Note: Threshold profiles shown refer to aluminum material only, dimensions may vary for mill finish bronze thresholds.

GASKETS Gasketing is available in a wide variety of materials. Vinyl is an economical choice and remains flexible down to -40°F. EPDM gasketing is supplied both as a solid (dense) and as a closed cell sponge with a tough outer skin. It remains flexible down to -50°F. Silicone gasketing provides the best resistance to cold by remaining flexible down to -70°F. Gasketing codes are listed below.

B - nylon brush
N - neoprene, solid EPDM, closed cell sponge EPDM, TPE
S - silicone
V - vinyl
W - pile (Thread may be removed to allow expansion.)
F - vinyl with fins

Fasteners

Standard

All products are furnished with appropriate fasteners as listed, except where noted. Most thresholds are furnished with mounting holes and #10 x 1-1/2" flat head wood screws. Most weatherstripping products are furnished with slotted holes and #6 x 5/8" pan head sheet metal screws. Brass screws are furnished with bronze products.

Optional

THRESHOLDS:

#10 Wood Screws and Plastic Anchors
#10 Wood Screws and Lead Anchors
#10 Machine Screws and Lead Anchors
1/4-20 Machine Screws and Lead Anchors
#10 S.S. Wood Screws
#10 S.S. Wood Screws and Plastic Anchors
#10 S.S. Wood Screws and Lead Anchors
1/4-20 S.S. Machine Screws and Lead Anchors
1/4-20 x 2" Flat Head Sleeve Anchor
#10 x 1-1/4" Flat Torx Wood Screws
#10 x 1-1/4" S.S. Flat Torx Wood Screws
#10-24 x 1-1/2" Flat Torx Machine Screws
#10-24 x 1-1/2" S.S. Flat Torx Machine Screws
#10-24 x 1-1/2" S.S. Spanner Head Machine Screws
#10-24 x 1-1/2" S.S. Spanner Head Wood Screws
#10 x 1-3/4" Spanner Head Wood Screws
Cast-On Anchors (Cast Products Only)
Tap-Con Type (1/4" x 1-3/4")

WEATHERSTRIP:

#6 x 5/8" Pan-head Stainless Steel Screws
#6 x 5/8" Self-tapping (TEK) Screws
#6 x 5/8" Pan-head Security Torx Sheet Metal Screws
Sexbolts
Two-way Self-adhesive Tape

Product Presentation:

Drawings or illustrations used in the catalog are subject to change without notice. Questions on any dimensions should be obtained by contacting Hager Companies Customer Service.

Fire Labeling

Products denoted by this symbol are classified and labeled by Underwriter's Laboratories, Inc.® as gasket material for use on listed steel frames and/or classified swinging type fire doors of the hollow metal or steel covered composite type rated up to 3 hours, or wood core fire doors rated up to 1-1/2 hours. Test results show these products do not adversely affect the fire resistance of the door or frame according to its UL rating. All products are regularly checked under a labeling and listing service. The clearance between the door and the frame and between the meeting edges of doors swinging in pairs shall be 1/8" ± 1/16" (3.18mm ± 1.59mm) for steel doors and shall not exceed 1/8" (3.2 mm) for wood doors.
Note: Ratings on some items may vary and are noted on the individual products. Classifications may be viewed at : http://www.ul.com/database/.

Handicap Accessibility

Products denoted by this symbol are designed for applications where handicap accessibility is specified. These products are no greater than 1/2" (12.7 mm) in height and have no more than 1/4" (6.3 mm) vertical rise or with slope proportions no greater than 1:2 slope. Offset floor conditions greater than 1/2" (12.7 mm) require a 1:12 slope.

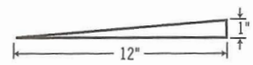

Air Infiltration

Products denoted by this symbol have been tested with air/smoke infiltration, all within the .500 cfm/ft. maximum allowable leakage at a pressure of a 25 mph wind (1.56 psf). The test results are shown below. The tests were conducted in accordance with ASTM test procedures and meets ASTM: E283-91.

Fire Tested

UBC 7.2 1997 PART 1

Products denoted by this symbol have been tested and approved by Underwriter's Laboratories, Inc.® for compliance to the requirements of UBC 7.2 "Fire Tests of Door Assemblies", (1997) Part 1 in addition to Underwriter's Laboratories, Inc.® standard UL10C.
Note: Ratings on some items may vary and are noted on the individual products. Classifications may be viewed at : http://www.ul.com/database/.

Sound Tested

Products denoted by this symbol have been sound tested and have the STC rating shown below. The tests were conducted in accordance with ASTM test procedures and meets ASTM: E90-90 & ASTM: E413-87.

Smoke Tested

Products denoted by this symbol have been smoke tested meeting the requirements of standards UL1784 and UBC 7.2, Part 2.

Numerical Index

Part #	Page
400S	G22
401S	G7
402S	G7
403S	G7
404S	G7
406S	G10
407S	G11
408S	G22
409S	G22
410S	G8
411S	G8
412S	G8
413S	G7
414S	G8
415S	G8
416S	G8
417S	G7
418S	G7
419S	G22
420S	G9
421S	G9
422S	G9
423S	G9
424S	G9
426S	G8
428S	G7
429S	G10
430S	G7
431S	G10
432S	G10
433S	G10
434S	G21
435S	G21
436S	G7
438S	G11
440S	G12
442S	G13
443S	G13
444S	G13
445S	G12
450S	G12
451S	G9
452S	G9
455S	G12
460S	G12
465S	G12
470S	G12
477S	G21
478S	G21
480S	G7
481S	G11
483S	G11
484S	G11
492S	G8
500S	G10
501S	G10
503S	G21
504S	G21
505S	G21
506S	G21
508	G21
515S	G16
516S	G16
517S	G16
518S	G16
520S	G14
532S	G15
541S	G14
552S	G14
560S	G15
565S	G14
570S	G15
572S	G11
575S	G15
580S	G14
599S	G14
600S	G17
601S	G17
602S	G17
603S	G17
604S	G17
606S	G18
608S	G18
610S	G18
612S	G18
619S	G13
620S	G20
621S	G20
622S	G20
623S	G19
624S	G19
625S	G19
626S	G19
627S	G19
628S	G19
640S	G20
641S	G20
642S	G20
643S	G19
651S	G23
652S	G23
653S	G23
654S	G23
655S	G23
676S	G13
677S	G13
701S	G17
711S	G32
713S	G17,G32
715S	G32
716S	G32
717S	G32,G37
718S	G32,G37
721S	G33
723B	G33
723S	G33
723T	G33
723W	G33
724S	G33
725S	G33
726S	G33
726W	G33
727S	G34
728S	G34
728W	G34
729B	G34
729S	G34
729T	G34
729W	G34
730S	G26
736S	G34
736W	G34
740S	G26
742S	G26
743S	G26
747S	G26
750S	G27
751S	G24
752S	G27
753S	G27
754S	G27
756S	G27,G35
759S	G27
770S	G27
771S	G35
772S	G24,G36
774S	G24,G36
775S	G24,G36
776S	G25,G36
777S	G24
778S	G25
779S	G25
780S	G25
781S	G24
782S	G25
785S	G28
787S	G25
789S	G25
800S	G28
801S	G27
802S	G27,G28,G35
803S	G28
806S	G27
808S	G28
810S	G37
820S	G31
821S	G31
822S	G31
823S	G31
824S	G31
825S	G31
835S	G37
836S	G37
837S	G37
838S	G35
839S	G35
840S	G37
844S	G35
845S	G35
846S	G35
847S	G36
848S	G36
849S	G36
858S	G30
859S	G30
860S	G28
861S	G29
862S	G28
863S	G28
864S	G29
865S	G30
866S	G30
870S	G29
871S	G29
872S	G35
873S	G29
874S	G29,G37
875S	G29
877S	G29
878S	G29
880S	G29
881S	G28
887S	G29
890S	G28
891S	G28
892S	G28
893S	G28
894S	G28
896S	G28

Saddle Thresholds

All thresholds appearing on this page are available with Sure Step Non-Slip Abrasive Coating.

418S
A,D,G,M

403S
A,D,M,S
.120" Thick

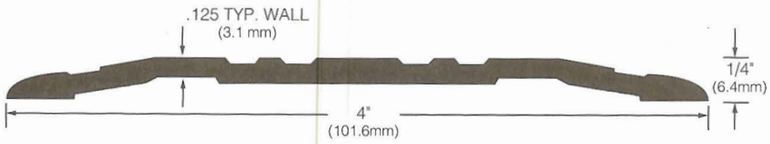

413S
A,D,G,M,S
.120" Thick

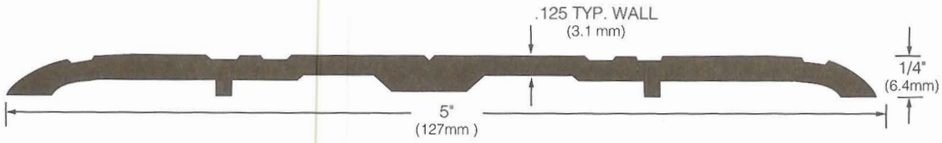

417S
A,D,G,M

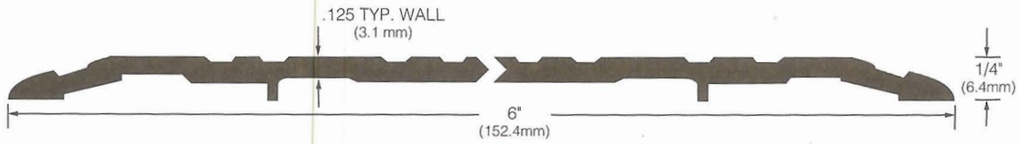

430S
A,D,G

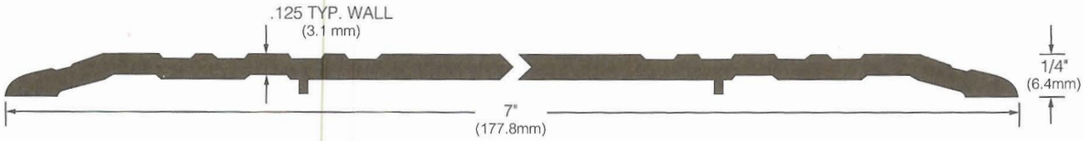

428S
A,D,G

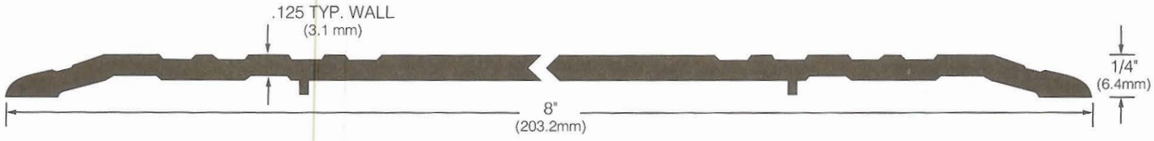

401S
A,D,G,M

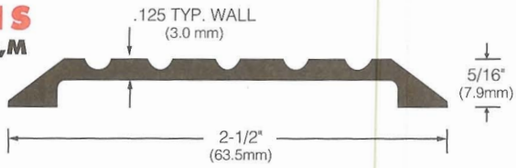

402S
A,D,G

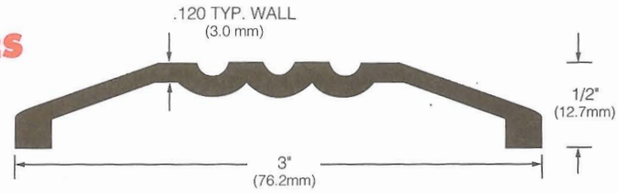

404S
A,D,G,M,S
.120" Thick

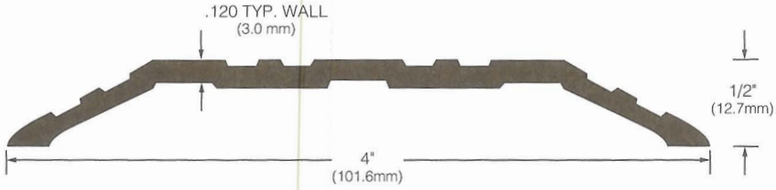

436S
A,D,G

480S
A,M

Elevator

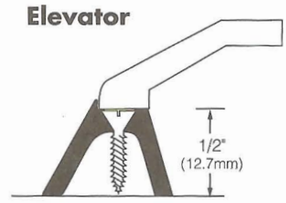

Saddle Thresholds

All thresholds appearing on this page are available with Sure Step Non-Slip Abrasive Coating.

410S
A,D,G,M

UBC 7.2 1997 PART 1

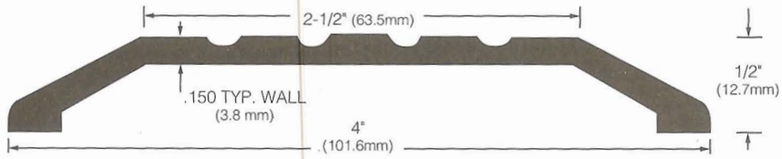

492S
A,D,G

UBC 7.2 1997 PART 1

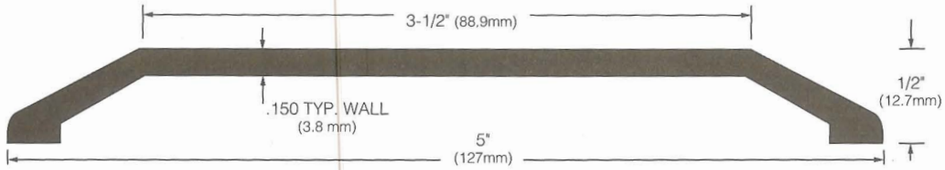

412S
A,D,G,M,S
.120" Thick

UBC 7.2 1997 PART 1

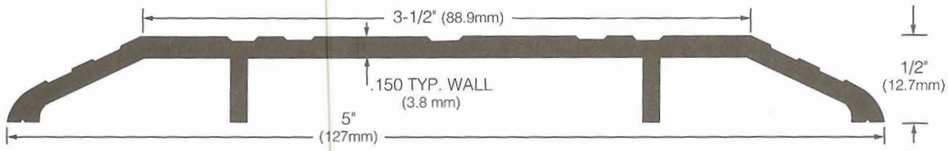

415S
A,D,G,M

UBC 7.2 1997 PART 1

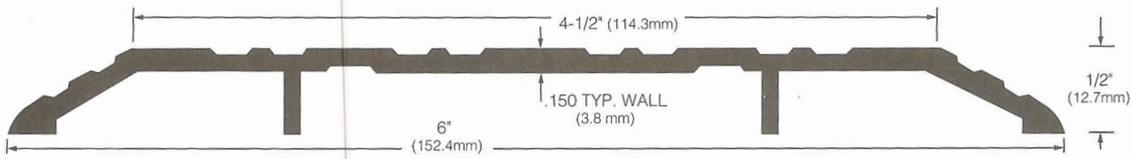

416S
A,D,G,M

UBC 7.2 1997 PART 1

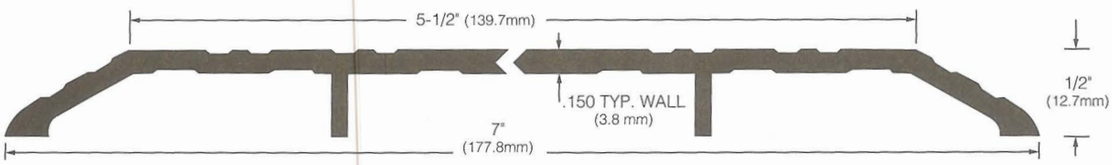

426S
A,D,G

UBC 7.2 1997 PART 1

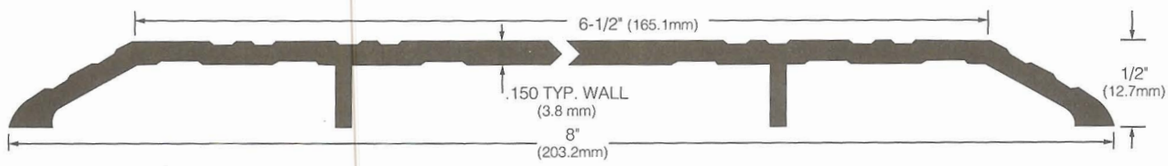

411S
A,D,G,M

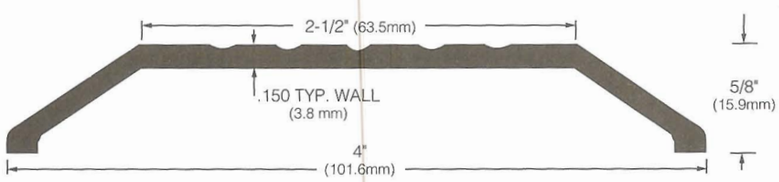

414S
A,D,G

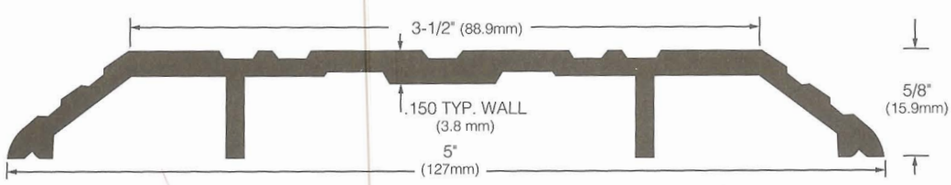

Finishes Codes • **A-** Mill Finish Aluminum • **D-** Dark Bronze Anodized Aluminum • **G-** Gold Anodized Aluminum • **M-** Mill Finish Brass (Bronze) • **S-**Stainless Steel

PH. 1-800-325-9995 or 1-314-772-4400 • Fax 1-800-782-0149 or 1-314-772-0744

rev. 7/02

"THE FIRST FAMILY OF SUPERIOR HARDWARE"

Thermal Barrier Saddle Thresholds

High strength thermal barrier is permanently bonded to the threshold, effectively blocking the transfer of heat or cold.
All thresholds appearing on this page are available with Sure Step Non-Slip Abrasive Coating.

420S
A,D,G

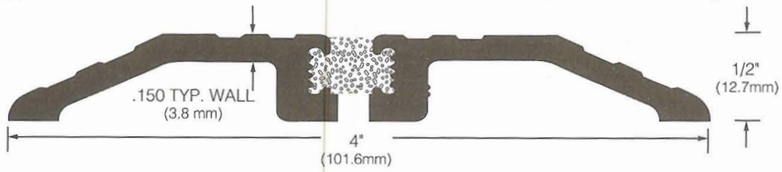

421S
A,D,G

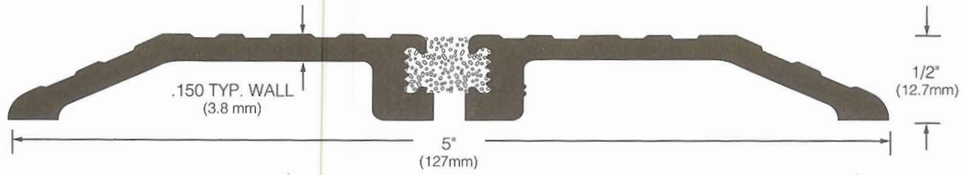

422S
A,D,G

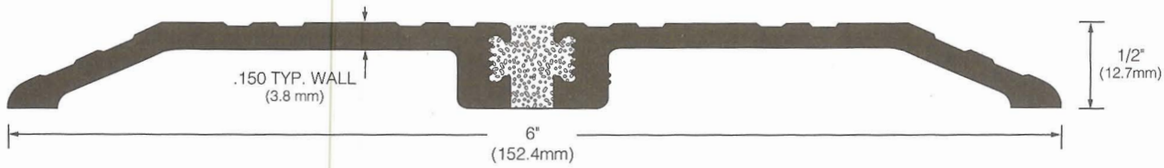

423S
A,D,G

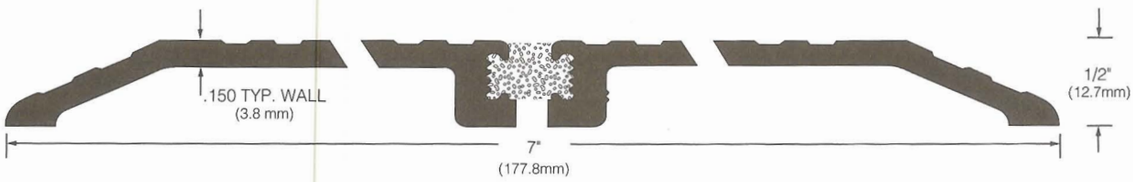

424S
A,D,G

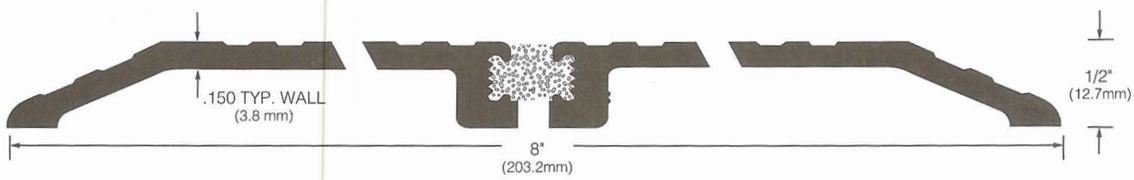

451S
A,D,G

UBC 7.2 1997 PART 1

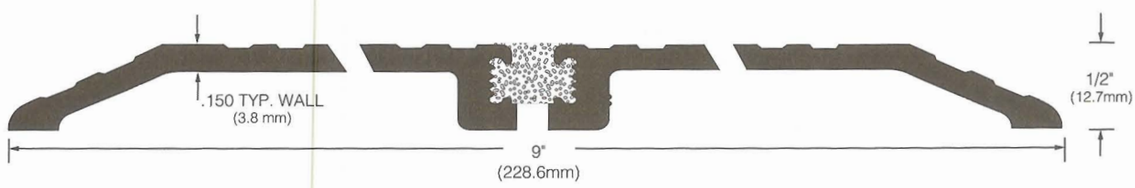

452S
A,D,G

UBC 7.2 1997 PART 1

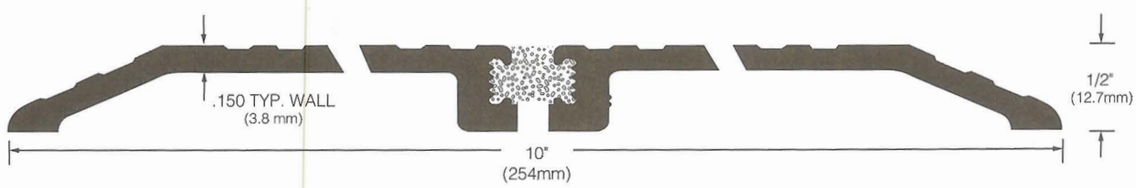

Finishes Codes • **A-** Mill Finish Aluminum • **D-** Dark Bronze Anodized Aluminum • **G-** Gold Anodized Aluminum

Half Saddle Thresholds

All thresholds appearing on this page are available with Sure Step Non-Slip Abrasive Coating.

433S
A,D,G,M

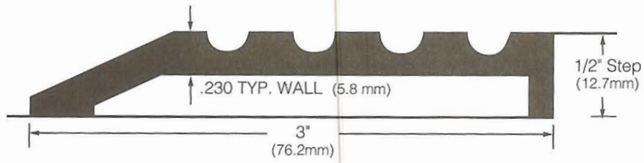

432S
A,D,G,M

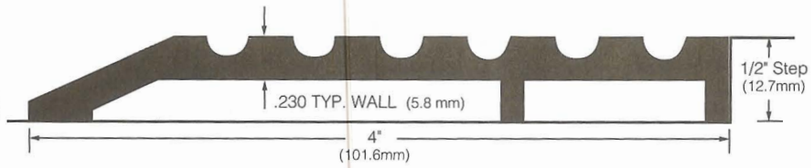

431S
A,D,G,M

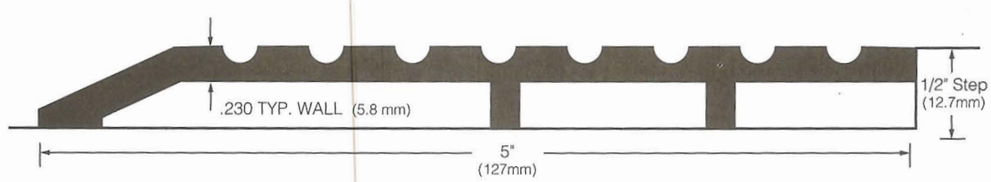

429S
A,D,G

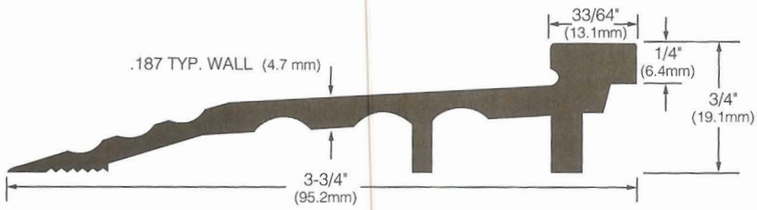

501S
A,D,G

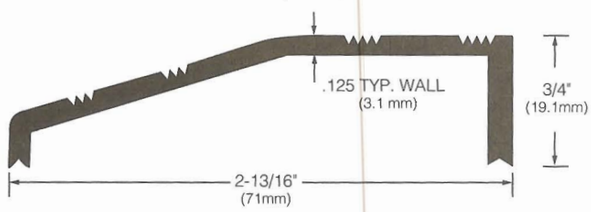

500S
A,D,G

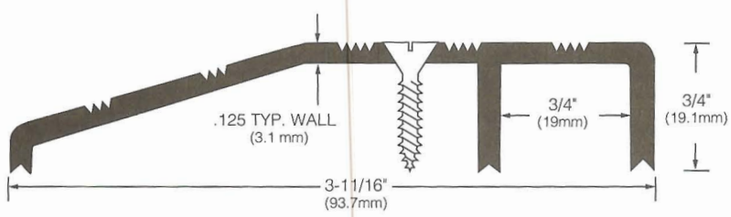

406S
A,D,G

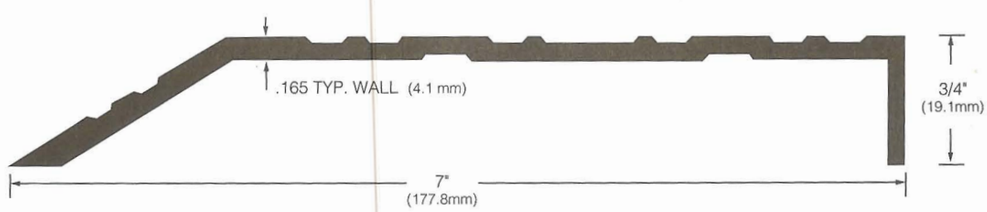

Finishes Codes • **A-** Mill Finish Aluminum • **D-** Dark Bronze Anodized Aluminum • **G-** Gold Anodized Aluminum • **M-** Mill Finish Brass (Bronze)

Half Saddle Thresholds

All thresholds appearing on this page are available with Sure Step Non-Slip Abrasive Coating.

407S

A,D,G

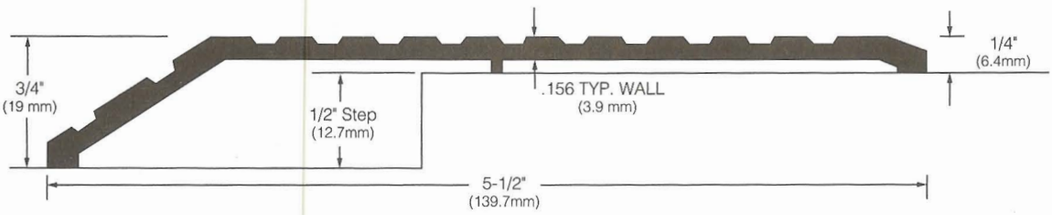

438S

A,D

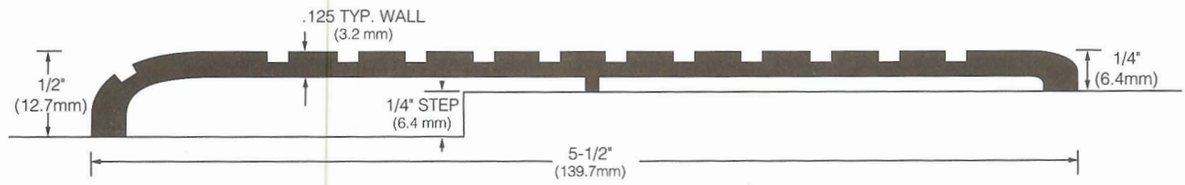

572S

A,D,G

UBC 7.2 1997 PART 1

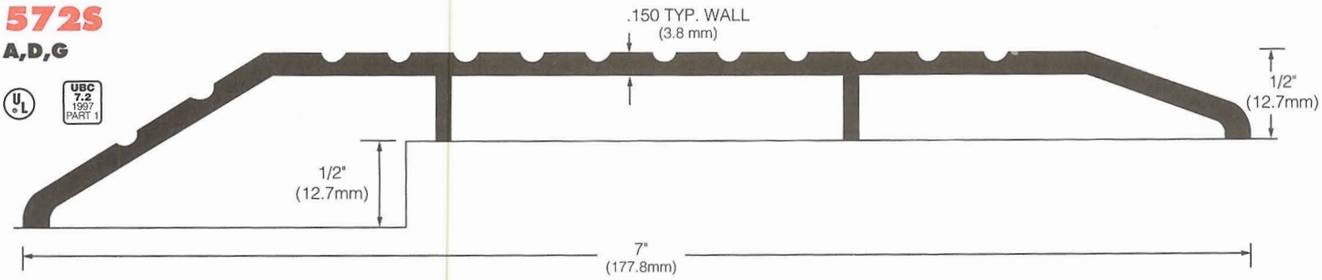

Bumper Strips

481S

Bumper Strip

A,D,G

UBC 7.2 1997 PART 1

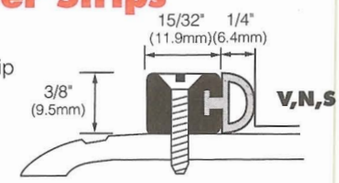

483S

Bumper Strip

A,D,G

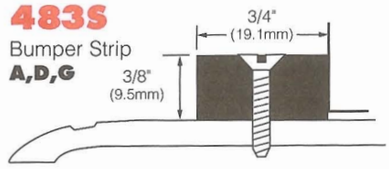

484S

Bumper Strip

A,D,G,M

UBC 7.2 1997 PART 1

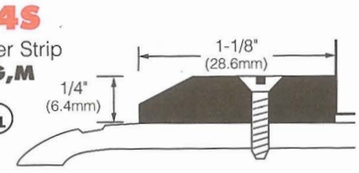

Insert Codes • **V-** Vinyl • **N-** TPE • **S-** Silicone

Finishes Codes • **A-** Mill Finish Aluminum • **D-** Dark Bronze Anodized Aluminum • **G-** Gold Anodized Aluminum • **M-** Mill Finish Brass (Bronze)

Floor Plate Assembly Thresholds

HAGER COMPANIES

Used primarily for extra wide door frames or to cover floor joists and expansion joists.

Choose the components you need to satisfy your requirements:
- Plates may be used fluted or smooth side up. Optional beveled edges available.
- Plates are furnished without holes and fasteners unless specified.
- All thresholds appearing on this page are available with Sure Step Non-Slip Abrasive Coating.

440S
A,D,G,M

UBC 7.2 1997 PART 1

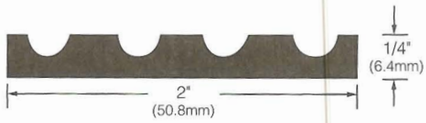

445S
A,D,G,M

UBC 7.2 1997 PART 1

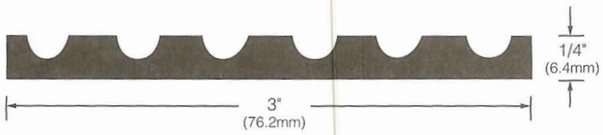

450S
A,D,G,M

UBC 7.2 1997 PART 1

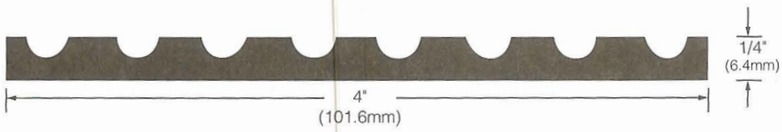

455S
A,D,G,M

UBC 7.2 1997 PART 1

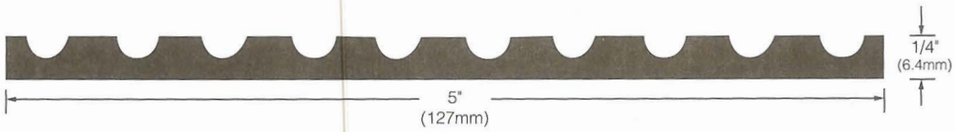

460S
A,D,G,M

UBC 7.2 1997 PART 1

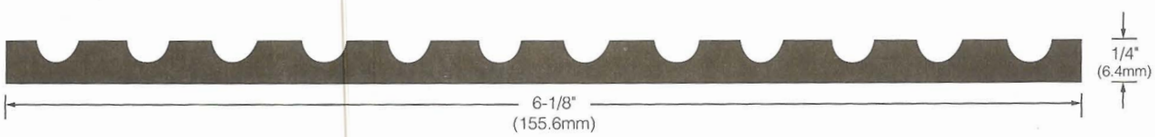

465S
A,D,G

UBC 7.2 1997 PART 1

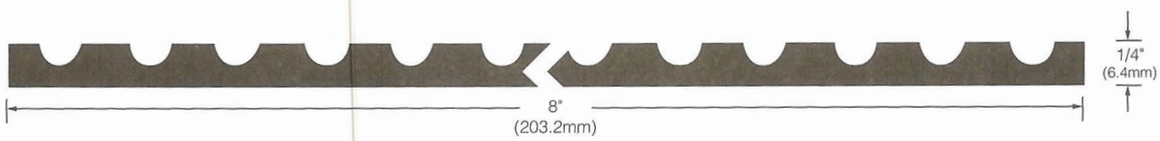

484S
A,D,G,M

UBC 7.2 1997 PART 1

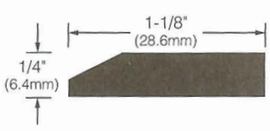

470S
A,D,G,M

UBC 7.2 1997 PART 1

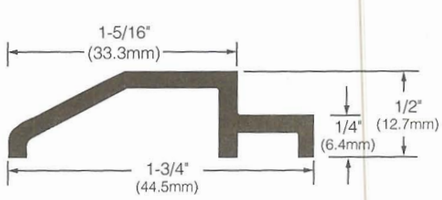

Typical Applications

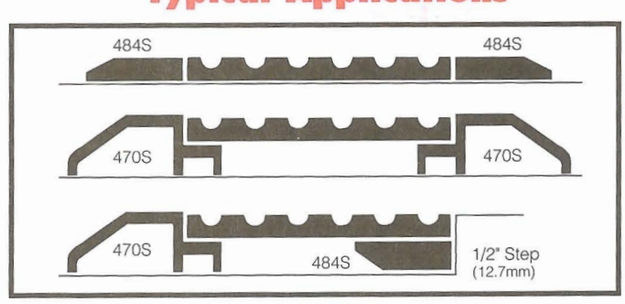

PH. 1-800-325-9995 or 1-314-772-4400 • Fax 1-800-782-0149 or 1-314-772-0744

rev. 7/02

"THE FIRST FAMILY OF SUPERIOR HARDWARE"

Floor Plate Assembly Thresholds

All thresholds appearing on this page are available with Sure Step Non-Slip Abrasive Coating.
Provides a 1:12 slope to meet the requirements of the Americans With Disabilities Act.

442S
A,D,G

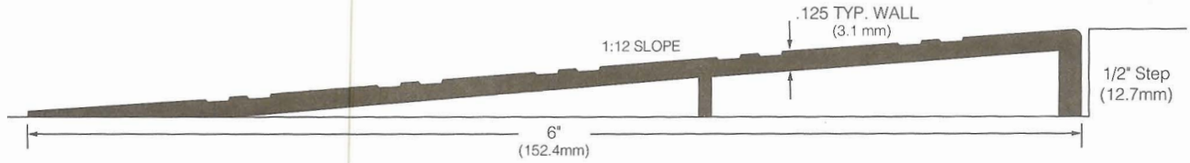

443S
A,D,G

UBC 7.2 1997 PART 1

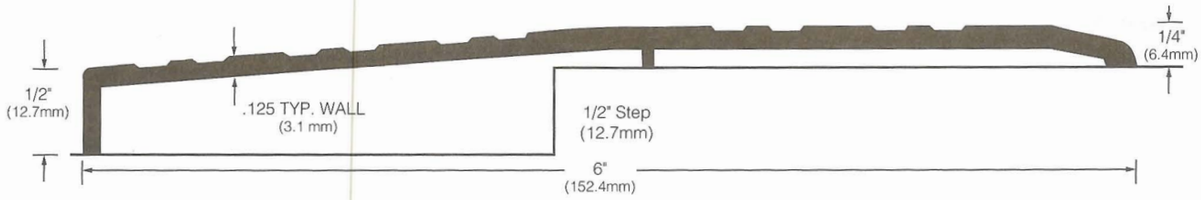

444S
A,D,G

UBC 7.2 1997 PART 1

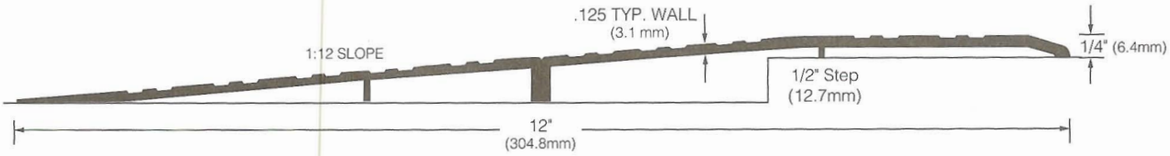

Cover Plates

Used primarily for expansion joints and situations requiring extra width or strength.

Manufactured from solid cold rolled aluminum for extra durability. Available in two thicknesses and up to 96" (244cm) in length.
Furnished standard with both edges beveled undrilled and #10 x 1-1/2"wood screws unless furnished with a template.

676S
A

UBC 7.2 1997 PART 1

677S
A

UBC 7.2 1997 PART 1

Threshold Anchor

Provides a fully adjustable anchor for concrete installation.

Beveled sides anchor the unit securely.
Special locking nut assemblies can be positioned to accomodate various mounting hole spacings.
Furnished with one #1/4"- 20 flat head screw and locking nut assembly per foot of anchor.
Specify #1/4"- 20 mounting holes for any threshold intended for use with the 619S.

619S
A

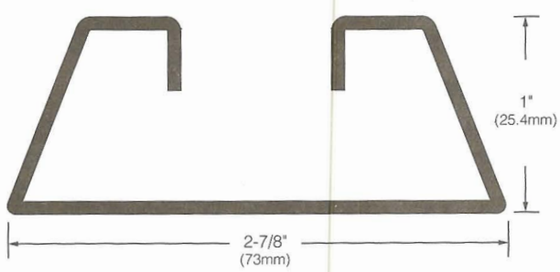

Typical Application

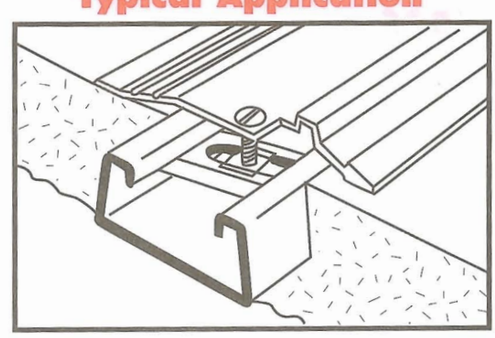

Insert Codes • **V-** Vinyl • **N-** TPE • **S-** Silicone
Finishes Codes • **A-** Mill Finish Aluminum • **D-** Dark Bronze Anodized Aluminum • **G-** Gold Anodized Aluminum • **M-** Mill Finish Brass (Bronze)

Panic Thresholds

All thresholds appearing on this page are available with Sure Step Non-Slip Abrasive Coating.

520S
A,D,G,M

UBC 7.2 1997 PART 1

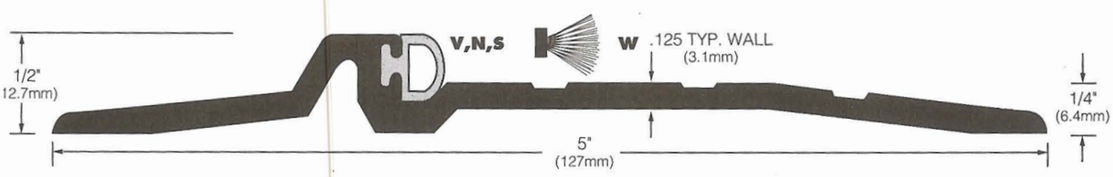

552S
A,D,G,M

UBC 7.2 1997 PART 1

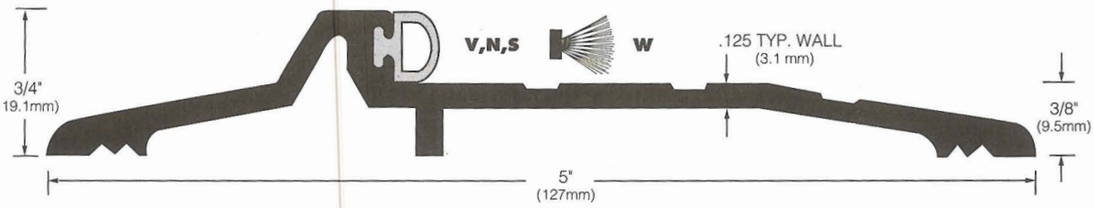

599S
A,D,G

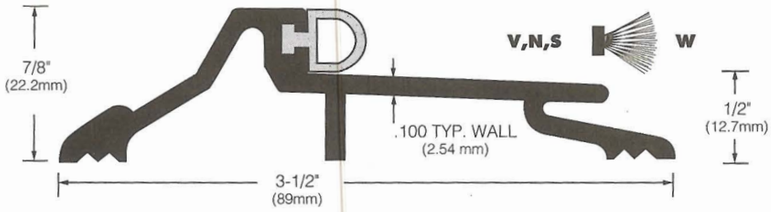

565S
A,D,G

UBC 7.2 1997 PART 1

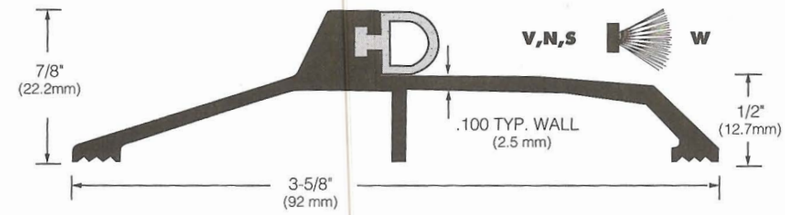

541S
A,D,G,M

UBC 7.2 1997 PART 1

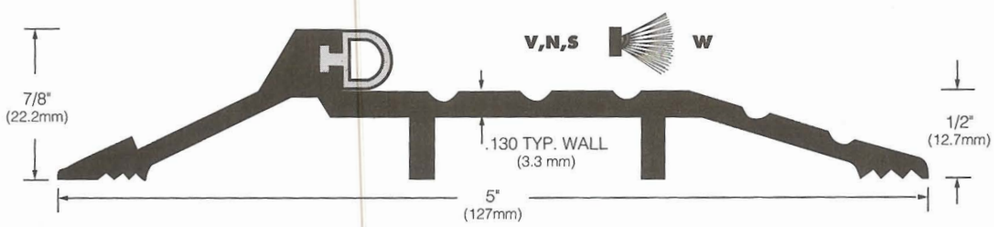

580S
A,D,G

UBC 7.2 1997 PART 1
Vinyl & TPE

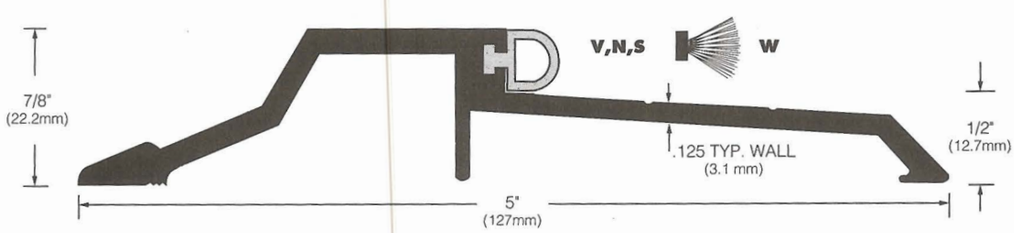

Insert Codes • **V-** Vinyl • **N-** TPE • **S-** Silicone • **W-** Pile (Specify When Ordering)
Finishes Codes • **A-** Mill Finish Aluminum • **D-** Dark Bronze Anodized Aluminum • **G-** Gold Anodized Aluminum • **M-** Mill Finish Brass (Bronze)

PH. 1-800-325-9995 or 1-314-772-4400 • Fax 1-800-782-0149 or 1-314-772-0744

rev. 7/02

"THE FIRST FAMILY OF SUPERIOR HARDWARE"

Panic Thresholds

All thresholds appearing on this page are available with Sure Step Non-Slip Abrasive Coating.

575S
A,D,G,M

UBC 7.2 1997 PART 1

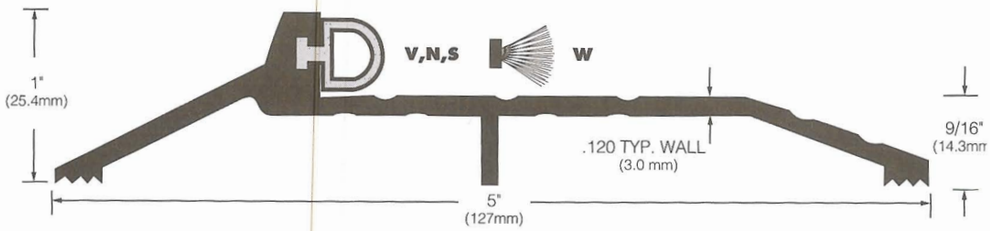

532S
A,D,G,M

UBC 7.2 1997 PART 1

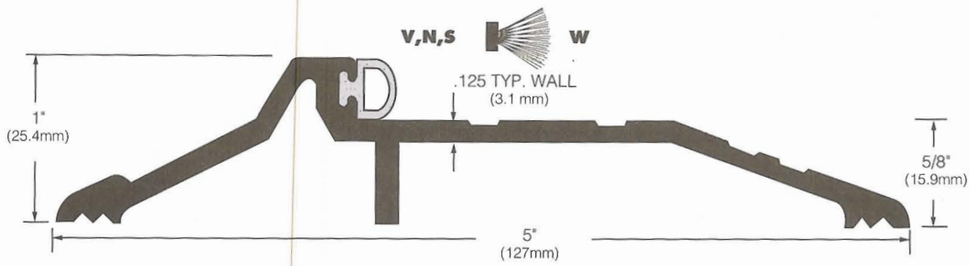

560S
A,D,G

UBC 7.2 1997 PART 1

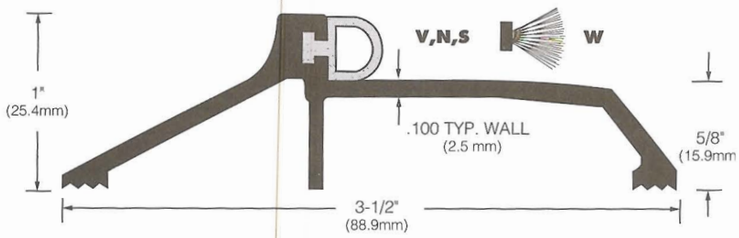

570S
A,D,G,M

UBC 7.2 1997 PART 1

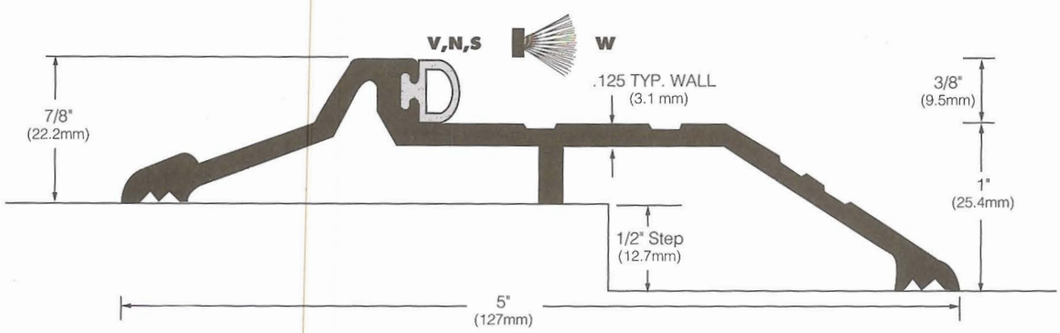

Typical Application

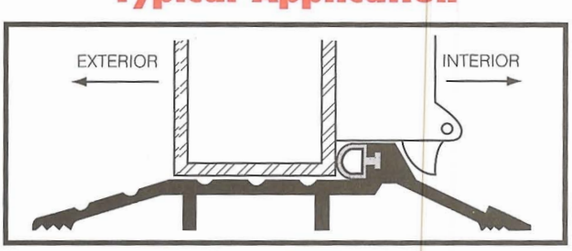

Standard End Notch for All Panic Thresholds
Should Extend 1/4" Past the Gasket Insert Step

Insert Codes • **V-** Vinyl • **N-** TPE • **S-** Silicone • **W-** Pile (Specify When Ordering)
Finishes Codes • **A-** Mill Finish Aluminum • **D-** Dark Bronze Anodized Aluminum • **G-** Gold Anodized Aluminum • **M-** Mill Finish Brass (Bronze)

Thermal Barrier Panic Thresholds

High strength thermal barrier is permanently bonded to the threshold, effectively blocking the transfer of heat or cold.
All thresholds appearing on this page are available with Sure Step Non-Slip Abrasive Coating.

515S
A,D,G

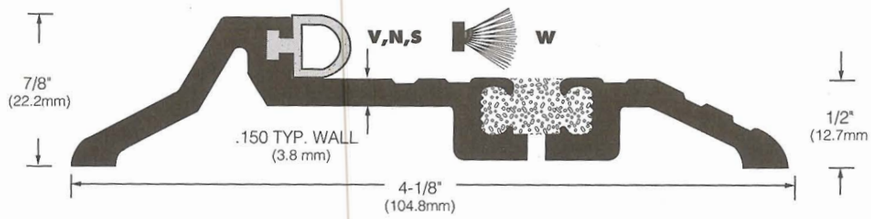

516S
A,D,G

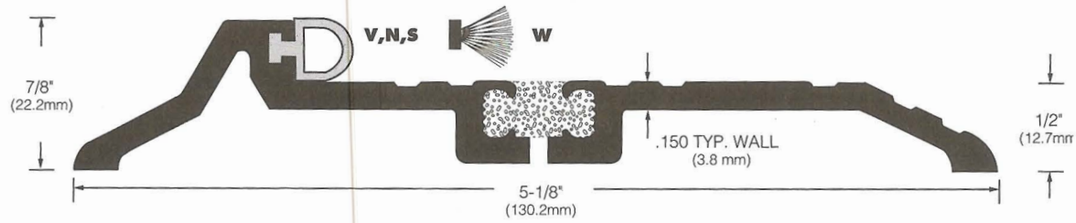

517S
A,D

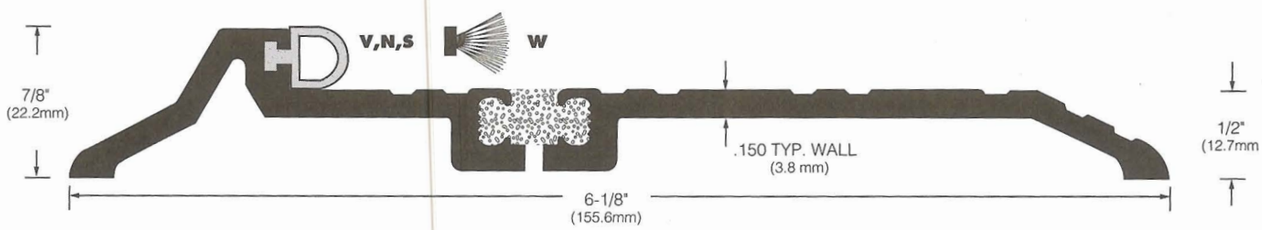

518S
A,D,G

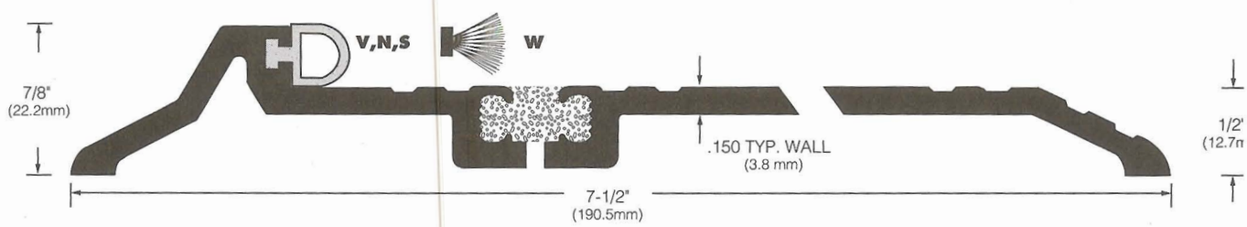

Insert Codes • **V-** Vinyl • **N-** TPE • **S-** Silicone • **W-** Pile (Specify When Ordering)
Finishes Codes • **A-** Mill Finish Aluminum • **D-** Dark Bronze Anodized Aluminum • **G-** Gold Anodized Aluminum • **M-** Mill Finish Brass (Bronze)

PH. 1-800-325-9995 or 1-314-772-4400 • Fax 1-800-782-0149 or 1-314-772-0744

rev. 7/02

"THE FIRST FAMILY OF SUPERIOR HARDWARE"

Interlocking Thresholds

All Interlocking Thresholds are supplied with 701S hook.
Water return type Interlocking Thresholds (608S, 610S, and 612S) catch water that may pass underneath the door and return to the outside through the weep holes provided. Optional pan keeps returned water from coming into contact with flooring (specify "with pan" when ordering).
All thresholds appearing on this page are available with Sure Step Non-Slip Abrasive Coating.

600S
A,D,G

UBC 7.2 1997 PART 1

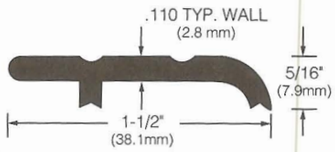

604S
A,D,M

UBC 7.2 1997 PART 1

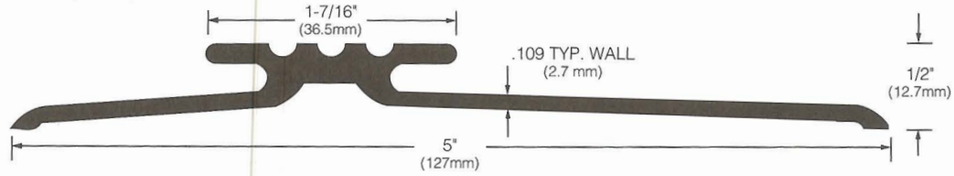

602S
A,D,M

UBC 7.2 1997 PART 1

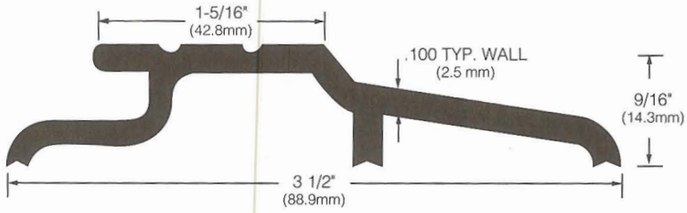

601S
A,D,G

UBC 7.2 1997 PART 1

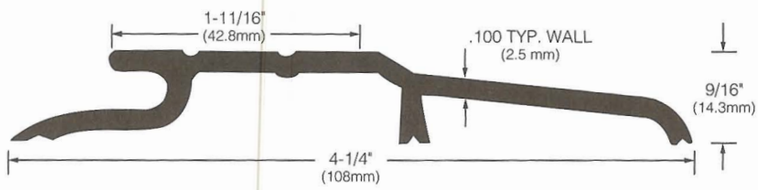

603S
A,D,M

UBC 7.2 1997 PART 1

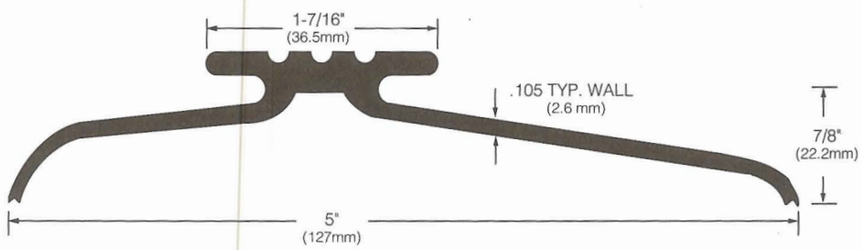

701S
J-Hook
A,M

UBC 7.2 1997 PART 1

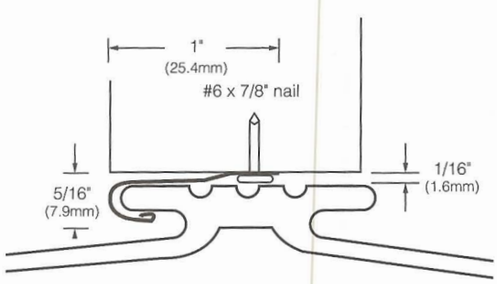

713S
L-Hook
A,D,G,M

UBC 7.2 1997 PART 1

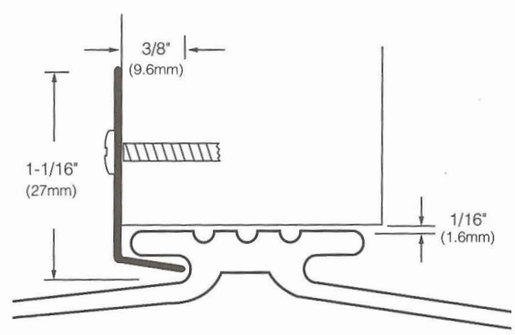

Finishes Codes • **A-** Mill Finish Aluminum • **D-** Dark Bronze Anodized Aluminum • **G-** Gold Anodized Aluminum • **M-** Mill Finish Brass (Bronze)

Interlocking Thresholds

All Interlocking Thresholds are supplied with 701S hook.
Water return type Interlocking Thresholds (608S, 610S, and 612S) catch water that may pass underneath the door and return to the outside through the weep holes provided. Optional pan keeps returned water from coming into contact with flooring (specify "with pan" when ordering).
All thresholds appearing on this page are available with Sure Step Non-Slip Abrasive Coating.

610S
A,D,M

UL UBC 7.2 1997 PART 1

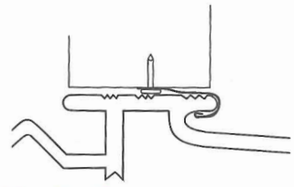

Typical Application

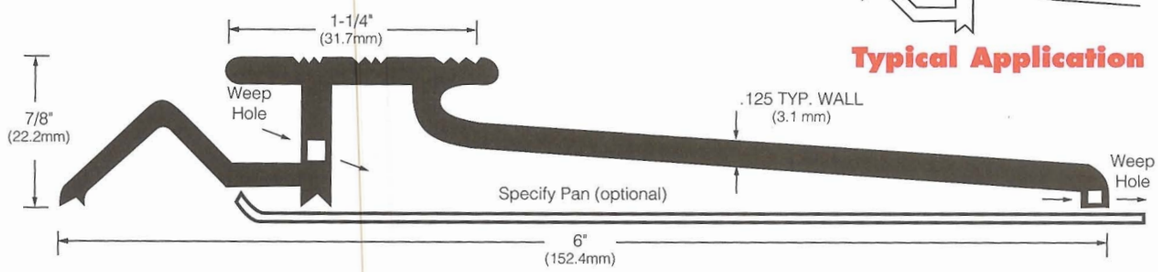

612S
A,D,G,M

UL UBC 7.2 1997 PART 1

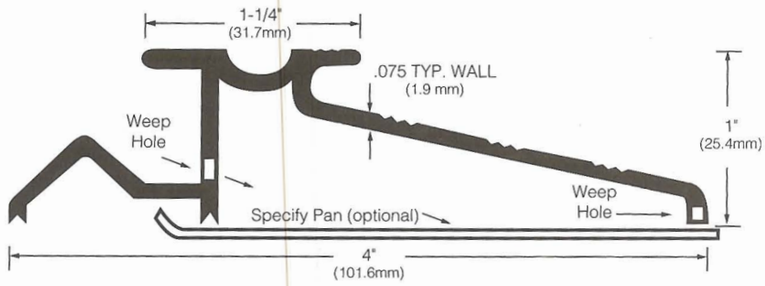

608S
A,D,M

UL UBC 7.2 1997 PART 1

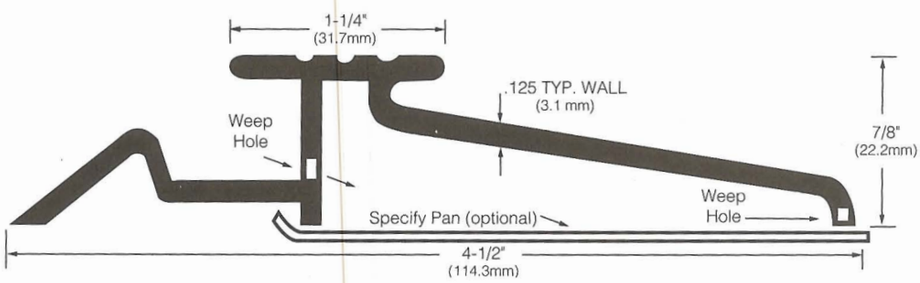

606S
A,D

UL UBC 7.2 1997 PART 1

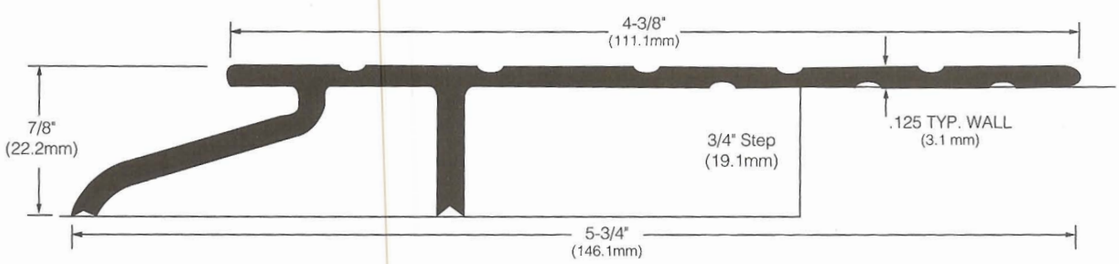

Finishes Codes • **A-** Mill Finish Aluminum • **D-** Dark Bronze Anodized Aluminum • **G-** Gold Anodized Aluminum • **M-** Mill Finish Brass (Bronze)

PH. 1-800-325-9995 or 1-314-772-4400 • Fax 1-800-782-0149 or 1-314-772-0744

rev. 7/02

"THE FIRST FAMILY OF SUPERIOR HARDWARE"

Abrasive Cast Aluminum Thresholds

Ideal for high traffic areas where maximum durability is required.

A heavy duty aluminum threshold with silicon carbide granules intergrally cast into the surface. Abrasive, skid resistant surface works well under wet, dry or oily conditions.
Fluted and cross-hatched patterned tops also available.
Maximum length available is 8 feet. Not available for floor closers.
Cut with reinforced abrasive disk, 1/8" thick, either aluminum oxide or silicon carbide .

624S
C

UBC 7.2 1997 PART 1

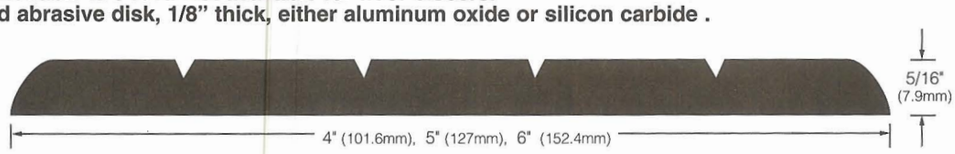

626S
C

UBC 7.2 1997 PART 1

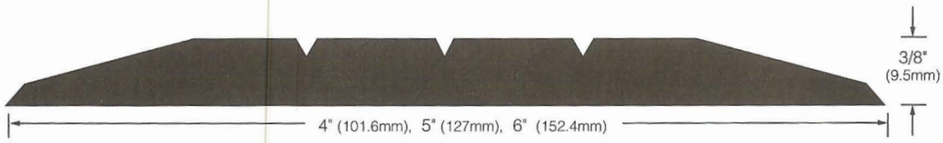

627S
C

UBC 7.2 1997 PART 1

625S
C

UBC 7.2 1997 PART 1

643S
Half-Saddle
C

UBC 7.2 1997 PART 1

623S
Interlocking
C

UBC 7.2 1997 PART 1

628S
Interlocking
C

UBC 7.2 1997 PART 1

Finishes Codes • C- Cast Aluminum

Note: Cast-on anchors available upon request

Abrasive Cast Aluminum Thresholds

Maximum length available is 8 feet. Not available for floor closers.

621S

C

UL — UBC 7.2 1997 PART 1

622S

C

UL — UBC 7.2 1997 PART 1

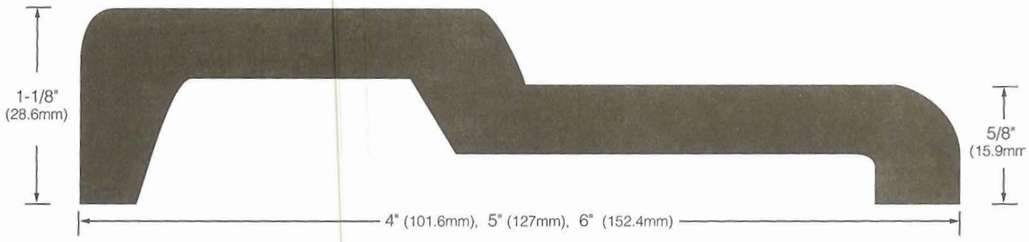

620S

C

UL — UBC 7.2 1997 PART 1

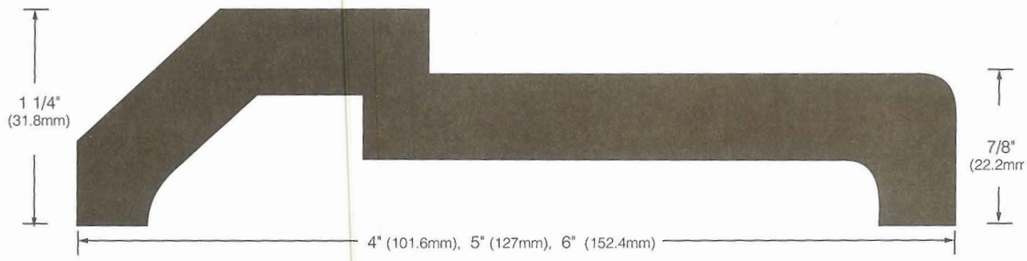

Abrasive Cast Aluminum Nosings

Maximum length available is 8 feet, except for 5" size which is 7 feet Max.

640S

C

UL — UBC 7.2 1997 PART 1

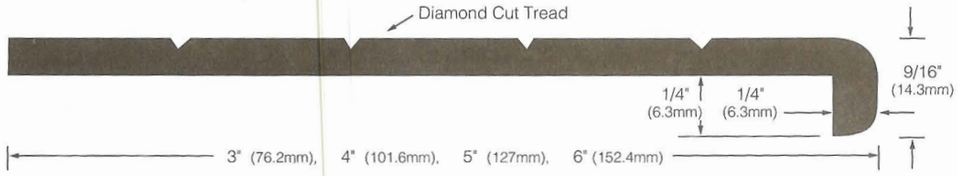

641S

C

UL — UBC 7.2 1997 PART 1

642S

C

UL — UBC 7.2 1997 PART 1

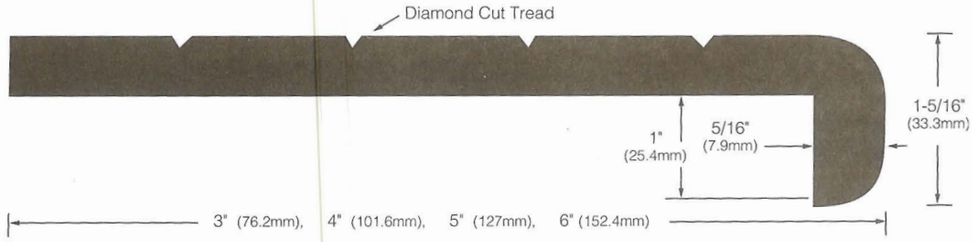

Finishes Codes • **C-** Cast Aluminum

Note: Cast-on anchors available upon request

Bumper Thresholds

All thresholds appearing on this page are available with Sure Step Non-Slip Abrasive Coating.

434S
A,D,G

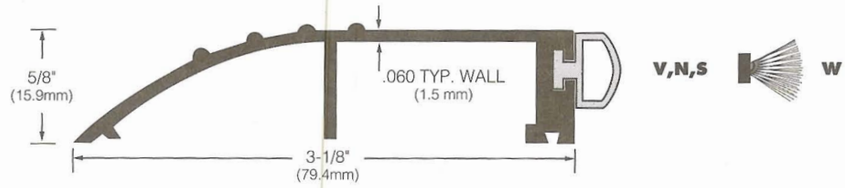

435S
A,D,G

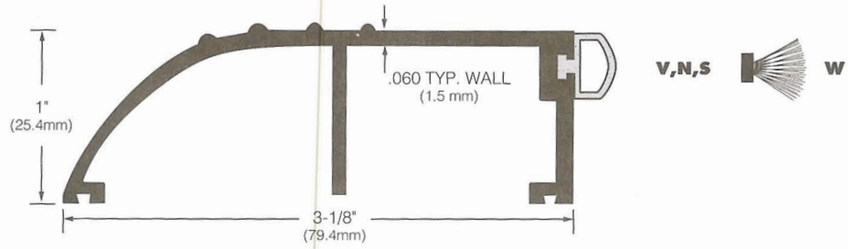

477S
A,D,G

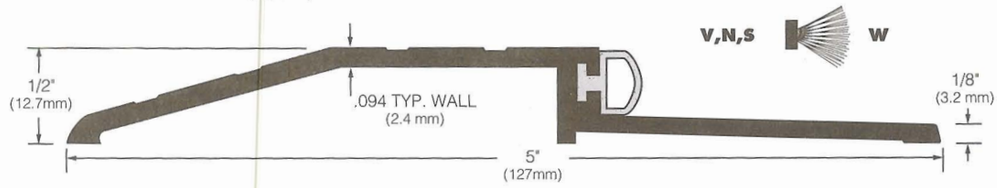

478S
A,D,G

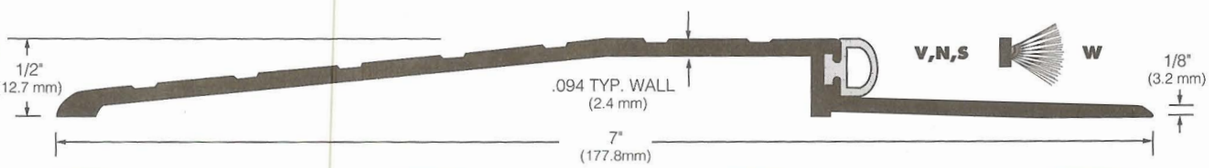

Carpet Thresholds

503S
Edge
A,D,G

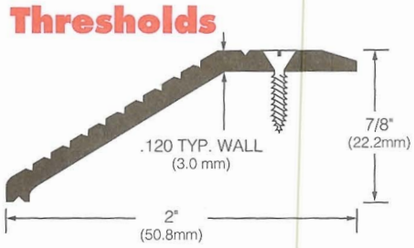

504S
Edge
A,D,G

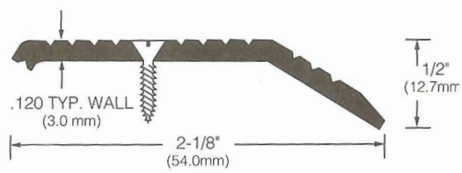

505S
Divider
A,D,G

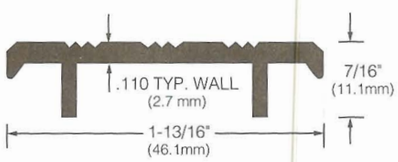

508S
Divider
A,D,G

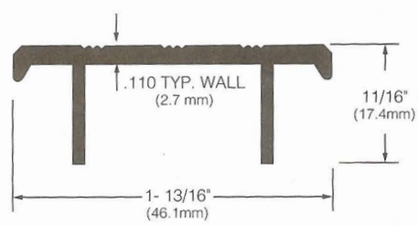

506S
Divider
A,D,G

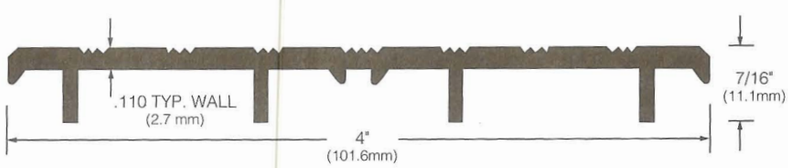

Insert Codes • **V-** Vinyl • **N-** TPE • **S-** Silicone • **W-** Pile (Specify When Ordering)
Finishes Codes • **A-** Mill Finish Aluminum • **D-** Dark Bronze Anodized Aluminum • **G-** Gold Anodized Aluminum • **M-** Mill Finish Brass (Bronze)

Residential Thresholds

All thresholds appearing on this page are available with Sure Step Non-Slip Abrasive Coating.

400S
A,D,G

UBC 7.2 1997 PART 1

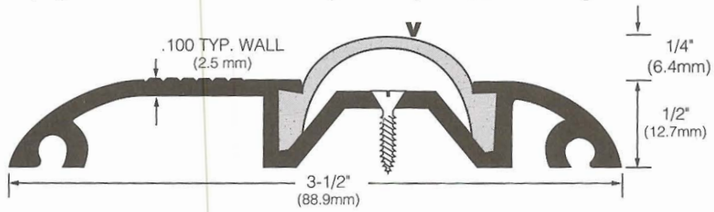

408S
A,D,G

UBC 7.2 1997 PART 1

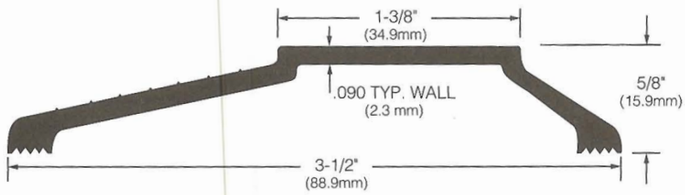

409S
A,D,G

UBC 7.2 1997 PART 1

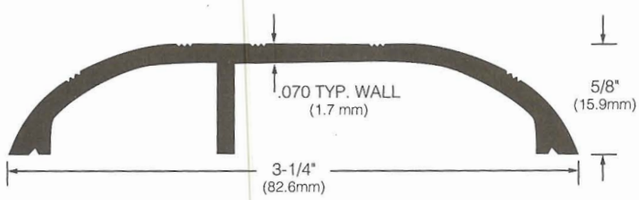

419S
A,D,G

UBC 7.2 1997 PART 1

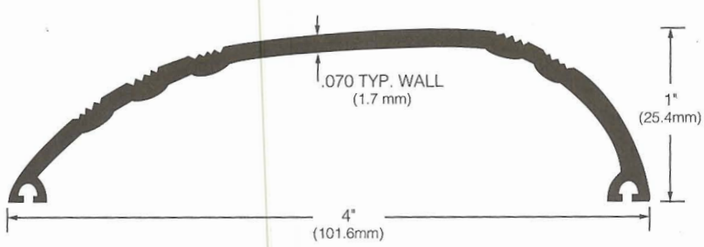

Insert Codes • **V-** Vinyl
Finishes Codes • **A-** Mill Finish Aluminum • **D-** Dark Bronze Anodized Aluminum • **G-** Gold Anodized Aluminum

PH. 1-800-325-9995 or 1-314-772-4400 • Fax 1-800-782-0149 or 1-314-772-0744

"THE FIRST FAMILY OF SUPERIOR HARDWARE"

Threshold Cover Plate Assembly For Saddle Floor Closers

Used in conjunction with floor closers either center or offset hung, single or double door application.

When ordering specify closer manufacturer, offset, closer model number, thickness of door, width of door opening and handling of closer if application.
All thresholds appearing on this page are available with Sure Step Non-Slip Abrasive Coating.

651S

Center hung
Without mitered ends
A,D,M

UBC 7.2 1997 PART 1

1/2" x 7"
(12.7mm x 177.8mm)

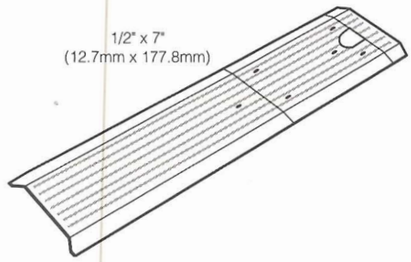

652S

Center hung
Without mitered ends
A,D,M

UBC 7.2 1997 PART 1

1/2" x 5"
(25.4mm x 127mm)

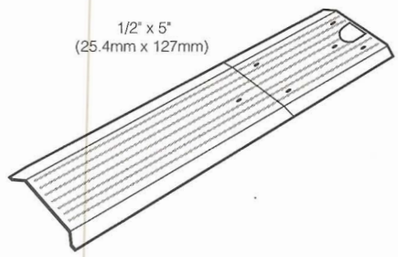

653S

Offset hung
With mitered ends
A,D,M

UBC 7.2 1997 PART 1

1/2" x 7"
(12.7mm x 177.8mm)

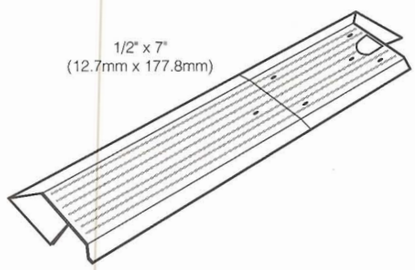

654S

Center hung
With mitered ends
A,D,M

UBC 7.2 1997 PART 1

1/2" x 7"
(12.7mm x 177.8mm)

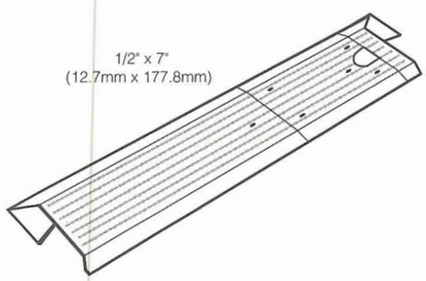

655S

Offset hung
With mitered ends
A,D,M

UBC 7.2 1997 PART 1

1/2" x 7" x 4"
(25.4mm x 177.8mm x 101.6mm)

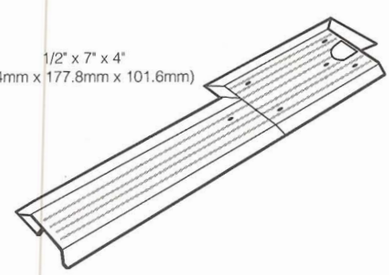

Finishes Codes • **A-** Mill Finish Aluminum • **D-** Dark Bronze Anodized Aluminum • **G-** Gold Anodized Aluminum

Door Bottoms

Constructed of strong, high quality extruded 6063-T5 aluminum or extruded CDA385 brass (architectural bronze).
For stock finishes, refer to the finish code below each item number. For other available finishes see page 4Z.
Unless "cut to exact length" is specified, to allow for fitting, lengths up through 48" are supplied 1/2" over their stated size.
Lengths greater than 48" are supplied 1" over their stated size.
Furnished with #6 pan head sheet metal screws and slotted holes for easy adjustment, unless noted.
Supplied with gasket as shown. Other available gaskets are stated for some products, please specify.

772S
A,D,G

UBC 7.2 1997 PART 1 — Vinyl & TPE & Pile

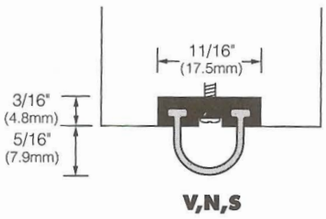

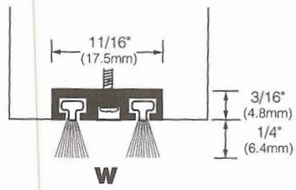

751S
A,D,G

UBC 7.2 1997 PART 1 — Vinyl & TPE & Pile

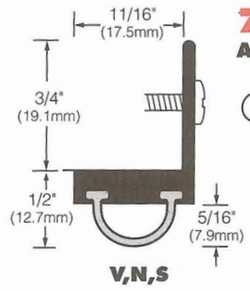

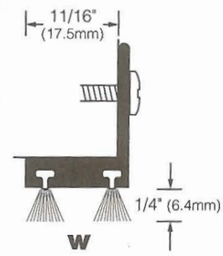

774S
A,D

UBC 7.2 1997 PART 1

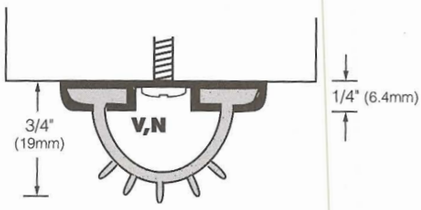

775S
A,D

UBC 7.2 1997 PART 1

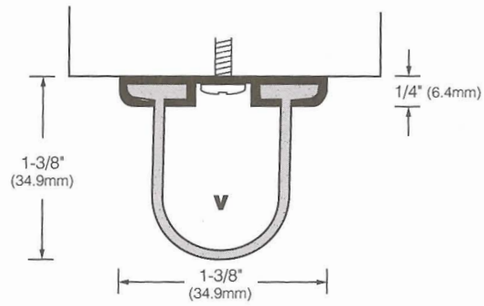

777S
A,D,G

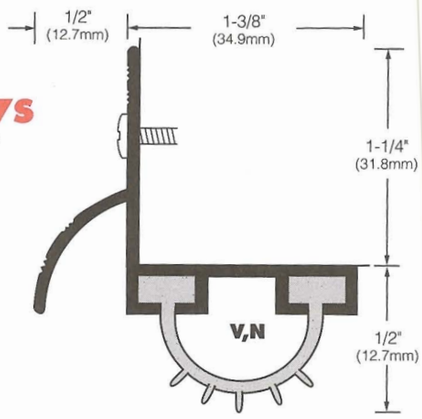

781S
A,D,G

UBC 7.2 1997 PART 1

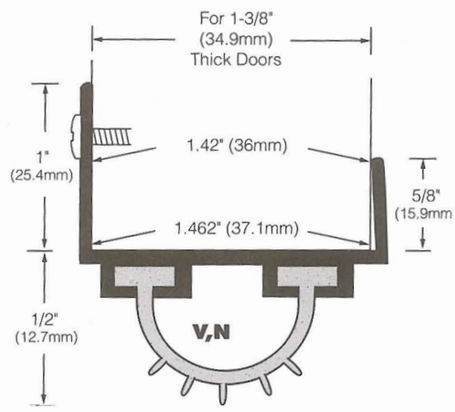

Insert Codes • **V-** Vinyl • **N-** TPE • **S-** Silicone • **W-** Pile (Specify When Ordering)
Finishes Codes • **A-** Mill Finish Aluminum • **D-** Dark Bronze Anodized Aluminum • **G-** Gold Anodized Aluminum

Door Bottoms

778S
A,D,G

UL · UBC 7.2 1997 PART 1

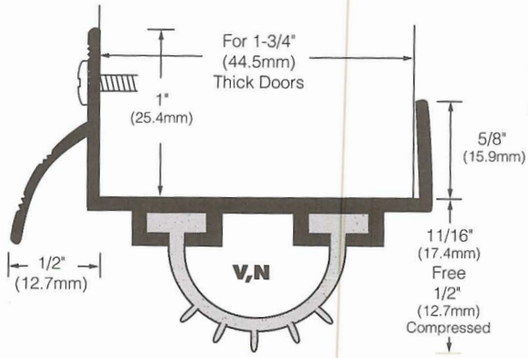

779S
A,D,G

UL · UBC 7.2 1997 PART 1

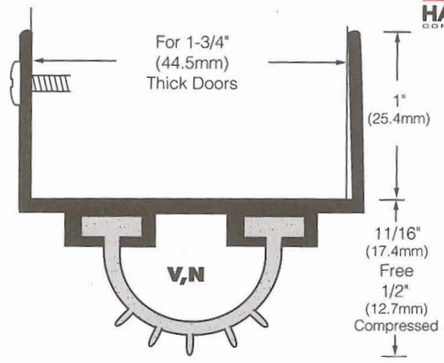

780S
A,D,G

UL · UBC 7.2 1997 PART 1

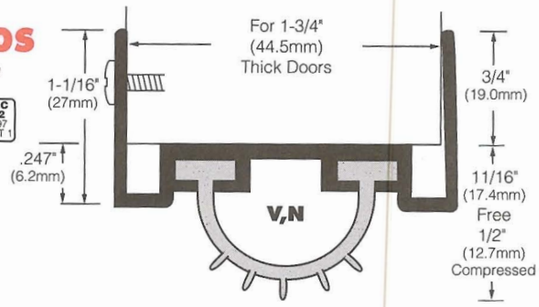

782S
A,D,G

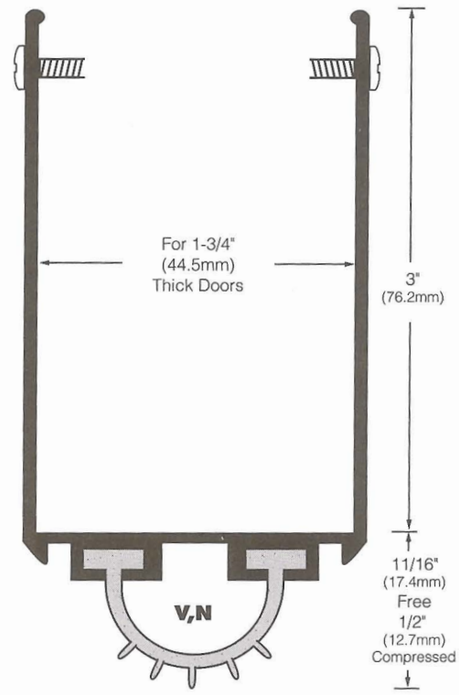

789S
A,D,G

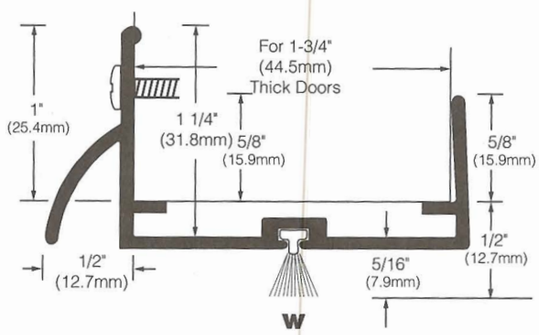

787S
A

UBC 7.2 1997 PART 1

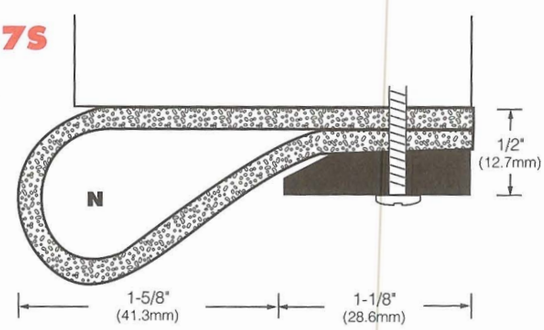

776S
X,D,G

UL · UBC 7.2 1997 PART 1

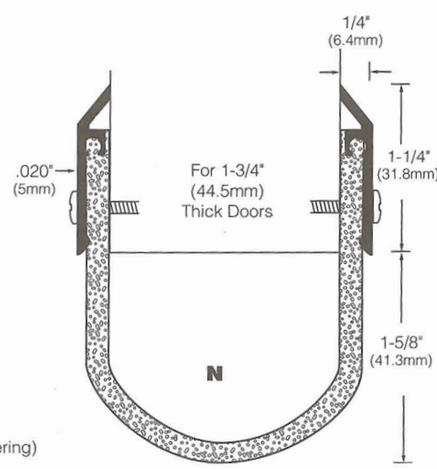

Insert Codes • **V-** Vinyl • **N-** EPDM (Closed Cell Sponge) • **S-** Silicone • **W-** Pile (Specify When Ordering)
Finishes Codes • **A-** Mill Finish Aluminum • **D-** Dark Bronze Anodized Aluminum
G- Gold Anodized Aluminum • **M-** Mill Finish Brass (Bronze) • **X-** Clear Anodized Aluminum

Automatic Door Bottoms

Provides an outstanding seal against drafts, light, smoke and sound.

For best results, use in conjunction with a threshold.
When door is fully closed, the door frame activates a plunger which forces the gasket insert downward to provide a continuous seal along the bottom of the door. When the door is opened, the spring-loaded gasket insert retracts into its housing to prevent the seal from dragging along the floor as the door swings.
All models are cut to exact length as stated and may be trimmed down by 2" maximum for fitting.
End plate and strike plate furnished with all models. (Strike plate only furnished on 742S)

730S
A

UL · UBC 7.2 1997 PART 1 · EPDM

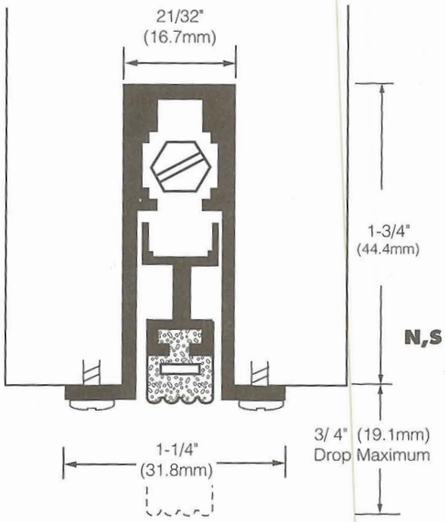

740S
D,G,X

UL · UBC 7.2 1997 PART 1 · EPDM

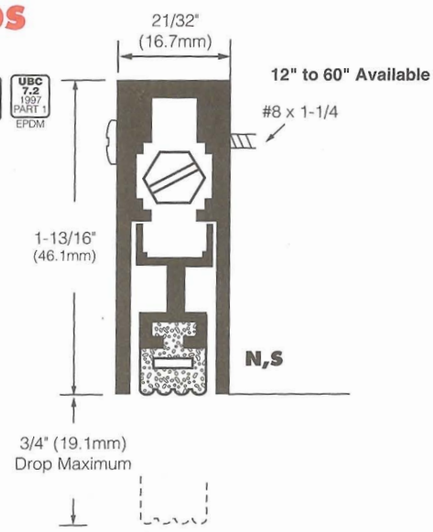

743S
A

UL · UBC 7.2 1997 PART 1

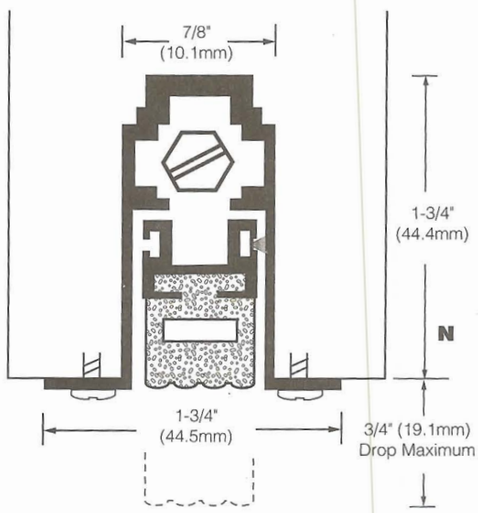

747S
D,G,X

UL · UBC 7.2 1997 PART 1

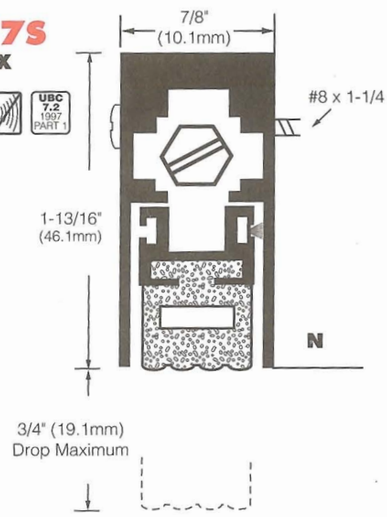

742S
A

UL · UBC 7.2 1997 PART 1

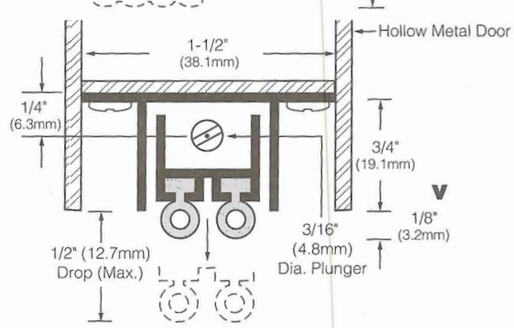

Insert Codes • **V-** Vinyl • **N-** EPDM (closed cell sponge) • **S-** Silicone • **W-** Pile (Specify When Ordering)
Finishes Codes • **A-** Mill Finish Aluminum • **D-** Dark Bronze Anodized Aluminum • **G-** Gold Anodized Aluminum • **X-** Clear Anodized Aluminum

PH. 1-800-325-9995 or 1-314-772-4400 • Fax 1-800-782-0149 or 1-314-772-0744

rev. 7/02

"THE FIRST FAMILY OF SUPERIOR HARDWARE"

Door Bottom Sweeps

750S
D,G,M,X,S

UL · UBC 7.2 1997 PART 1 · Vinyl & TPE

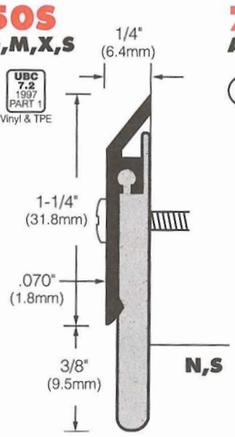

753S
A,D,G

UL · UBC 7.2 1997 PART 1

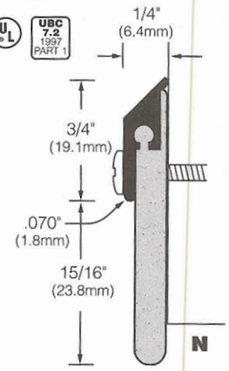

754S
D,G,X

UL · UBC 7.2 1997 PART 1

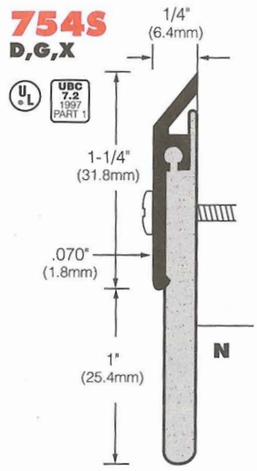

752S
A,D,G

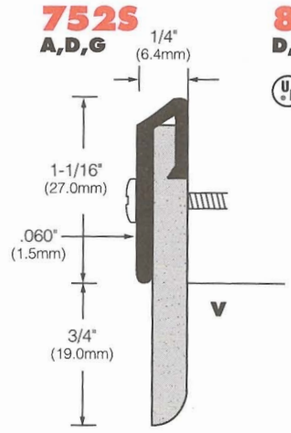

872S
D,G,M,X,S

UL · UBC 7.2 1997 PART 1

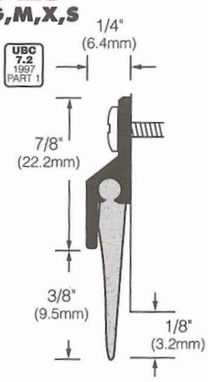

770S
A,D,G

UL

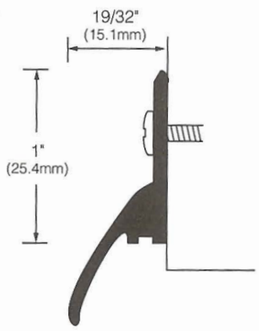

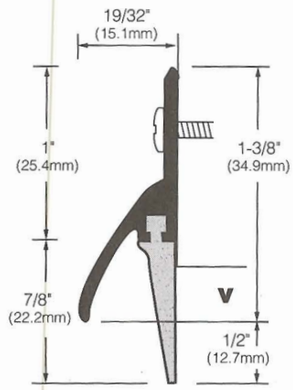

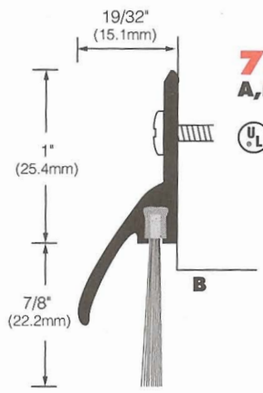

756S
A,D,G

UL · UBC 7.2 1997 PART 1

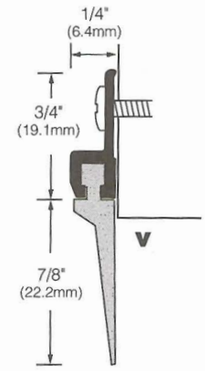

802S
A,D,G

UL · UBC 7.2 1997 PART 1

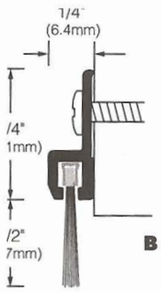

801S
A,D,G

UL · UBC 7.2 1997 PART 1

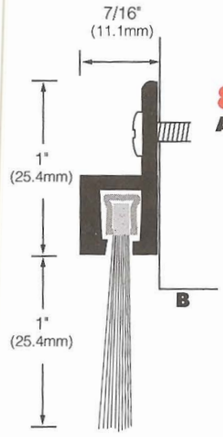

806S
A,D,G

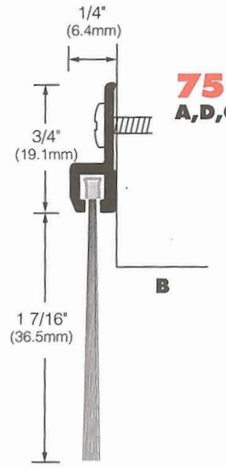

759S
A,D,G

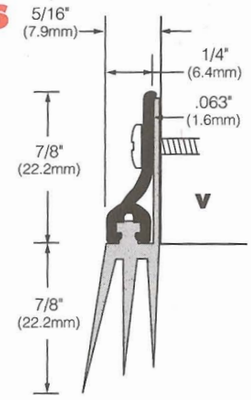

Insert Codes • **V-** Vinyl • **N-** TPE • **S-** Silicone • **B-** Brush Nylon
Finishes Codes • **A-** Mill Finish Aluminum • **D-** Dark Bronze Anodized Aluminum • **G-** Gold Anodized Aluminum • **M-** Mill Finish Brass (Bronze) **S-**Stainless Steel • **X-** Clear Anodized Aluminum

Jamb Weatherstripping

HAGER COMPANIES

890S
A,D,G

UL · UBC 7.2 1997 PART 1

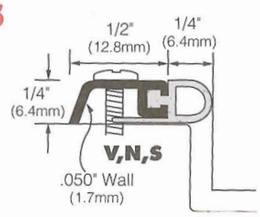

891S
A,D,G

UL · UBC 7.2 1997 PART 1

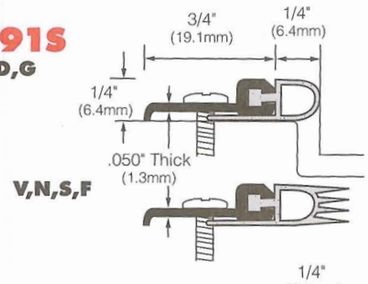

785S
A,D,G

UL · UBC 7.2 1997 PART 1

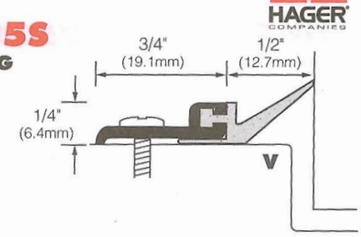

896S
A,D,G

UL · UBC 7.2 1997 PART 1

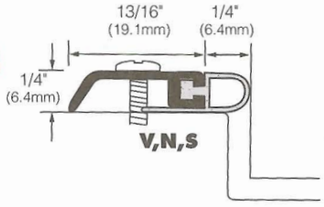

894S
D,G,X

UL · UBC 7.2 1997 PART 1

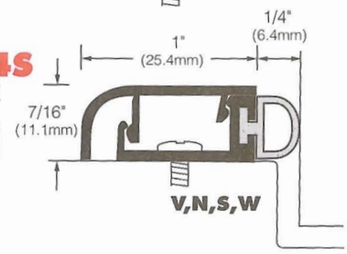

892S
A,D,G

UL · UBC 7.2 1997 PART 1

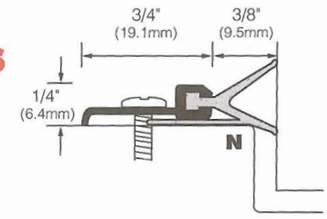

800S
A,D,G

UL · UBC 7.2 1997 PART 1

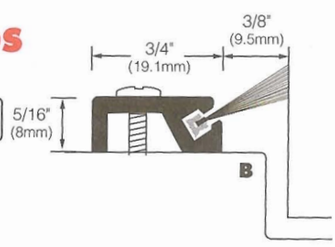

860S
Adjustable
A,D,G

UL · UBC 7.2 1997 PART 1

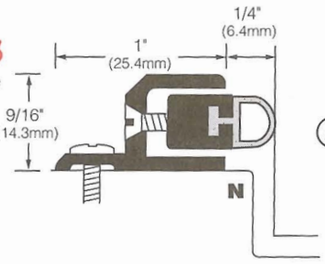

862S
D,G,X

UL · UBC 7.2 1997 PART 1

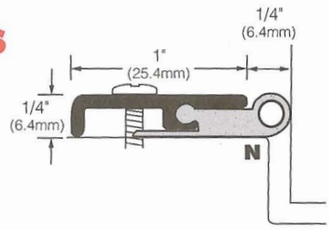

802S
A,D,G

UL · UBC 7.2 1997 PART 1

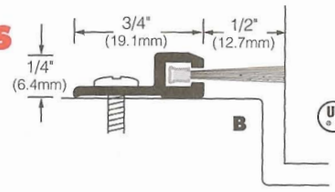

881S
A,D,G

UL · UBC 7.2 1997 PART 1

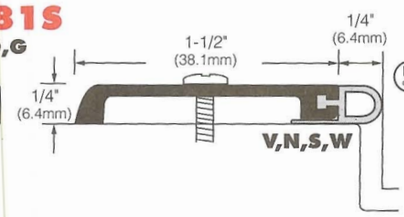

863S
D,G,X

UL · UBC 7.2 1997 PART 1

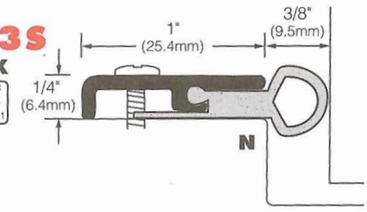

893S
A,D,G

UL · UBC 7.2 1997 PART 1

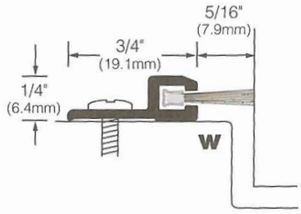

803S
A,D,G

UL · UBC 7.2 1997 PART 1

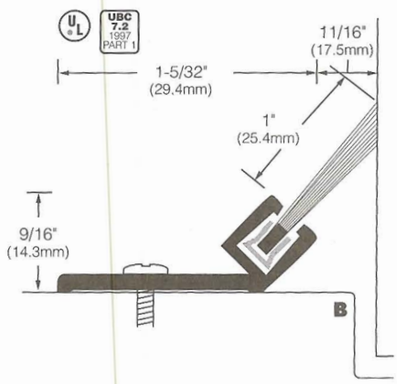

808S
A,D,G

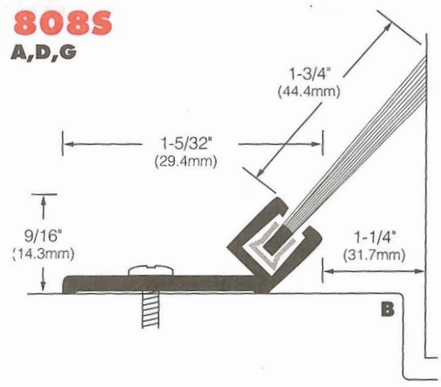

Insert Codes • **B-** Brush • **V-** Vinyl • **N-** TPE • **S-** Silicone • **W-** Pile (Specify When Ordering) • **B-** Nylon Brush
Finishes Codes • **A-** Mill Finish Aluminum • **D-** Dark Bronze Anodized Aluminum • **G-** Gold Anodized Aluminum • **X-** Clear Anodized Aluminum

PH. 1-800-325-9995 or 1-314-772-4400 • Fax 1-800-782-0149 or 1-314-772-0744

rev. 7/02

"THE FIRST FAMILY OF SUPERIOR HARDWARE"

Jamb Weatherstrip

874S
A,D,G,S

UL · UBC 7.2 1997 PART 1

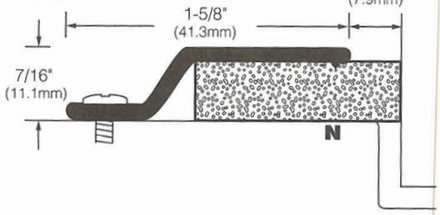

871S
A,D,G

UL · UBC 7.2 1997 PART 1

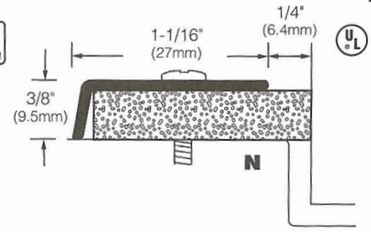

878S
D,G,X

UL · UBC 7.2 1997 PART 1

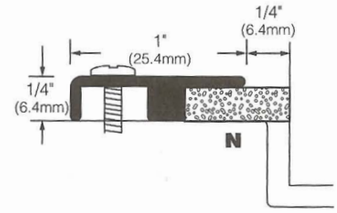

875S
D,G,M,X

UL · UBC 7.2 1997 PART 1 EPDM

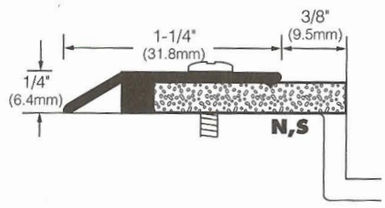

877S
A,D,G

UL · UBC 7.2 1997 PART 1

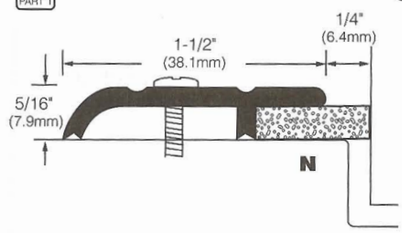

870S
D,G,M,X,S

UL · UBC 7.2 1997 PART 1

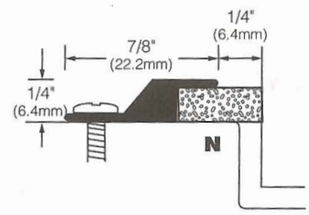

880S
A,D,G

UL · UBC 7.2 1997 PART 1

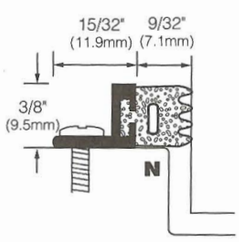

861S
A,D,G

UL · UBC 7.2 1997 PART 1

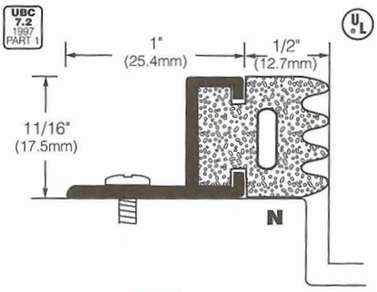

873S
A,D,G

UL · UBC 7.2 1997 PART 1

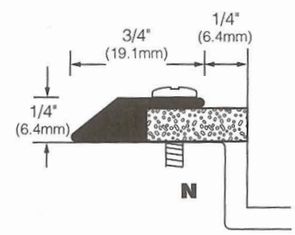

864S
Adjustable
D,G,X

UL · UBC 7.2 1997 PART 1

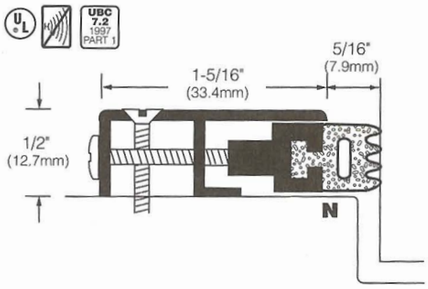

887S
Adjustable
A,D,G

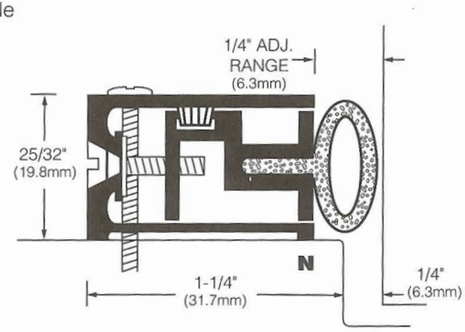

Insert Codes • **B-** Nylon Brush • **V-** Vinyl • **N-** EPDM (closed cell foam) • **S-** Silicone • **W-** Pile (Specify When Ordering)
Finishes Codes • **A-** Mill Finish Aluminum • **D-** Dark Bronze Anodized Aluminum • **G-** Gold Anodized Aluminum • **M-** Mill Finish Brass (Bronze)
X- Clear Anodized Aluminum • **S-** Stainless Steel

Jamb Weatherstrip

859S
Magnetic
A,D,G

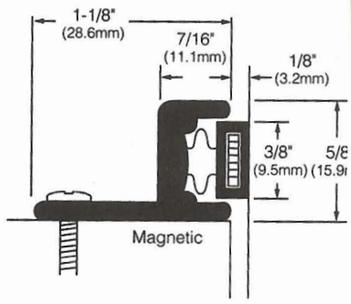

858S
Spring Adjustable
A,D,G

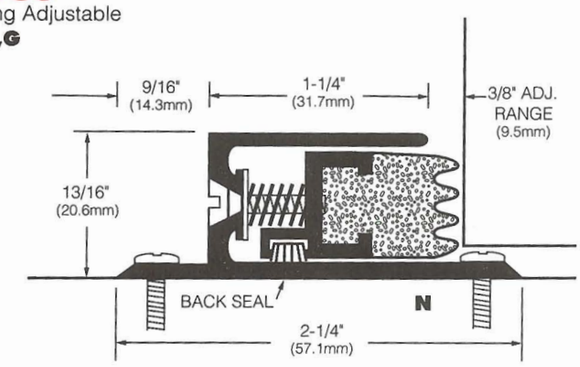

865S
Adjustable
A,D,G

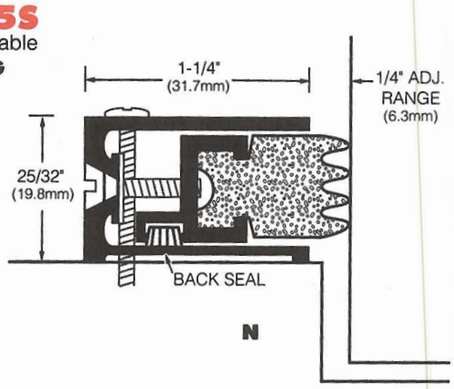

866S
Spring Adjustable
A,D,G

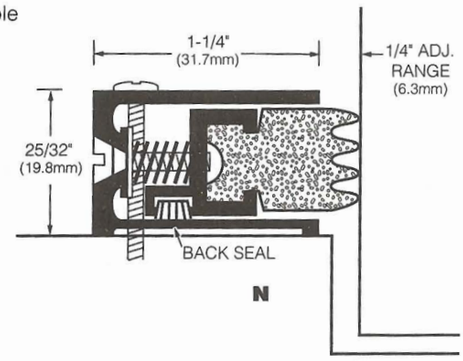

Insert Codes • **B-** Nylon Brush • **V-** Vinyl • **N-** EPDM (closed cell foam) • **S-** Silicone • **W-** Pile (Specify When Ordering)
Finishes Codes • **A-** Mill Finish Aluminum • **D-** Dark Bronze Anodized Aluminum • **G-** Gold Anodized Aluminum • **M-** Mill Finish Brass (Bronze)
X- Clear Anodized Aluminum • **S-** Stainless Steel

PH. 1-800-325-9995 or 1-314-772-4400 • Fax 1-800-782-0149 or 1-314-772-0744

rev. 7/02

"THE FIRST FAMILY OF SUPERIOR HARDWARE"

Spring Bronze

Constructed of high tempered .009" gauge bronze to provide a permanent spring. Hemmed edges. Furnished with #16 x 7/8" nails. Optional #4 wafer head drive nails available for application to metal door frames.

820S
M

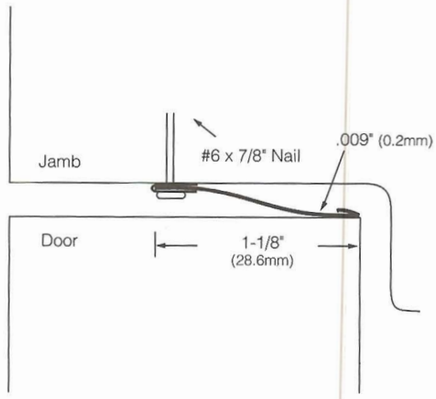

822S
M

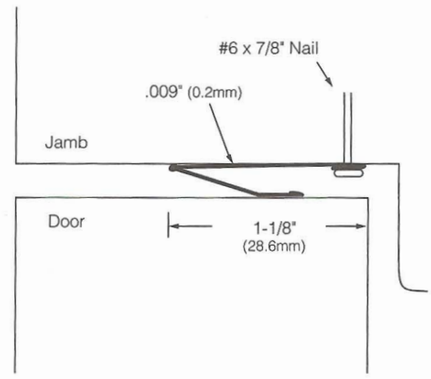

823S
M

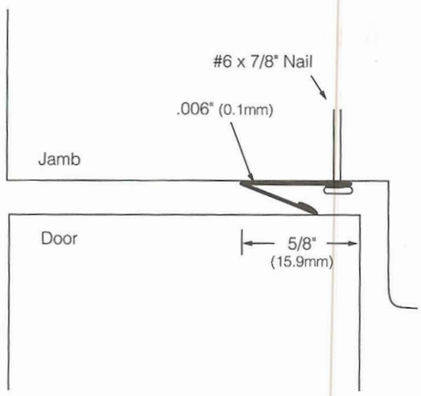

824S
M

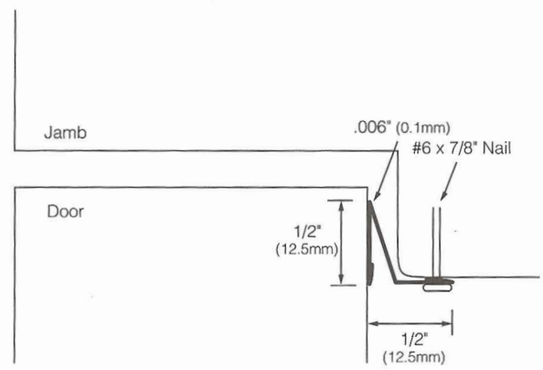

821S
Door Bottom
M

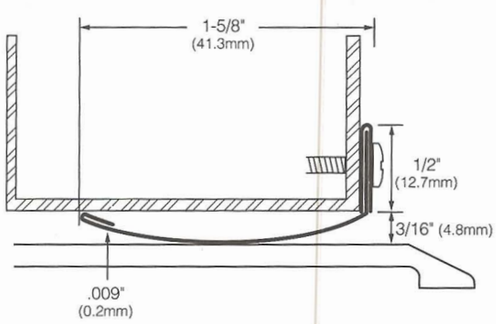

825S
Door Bottom
M

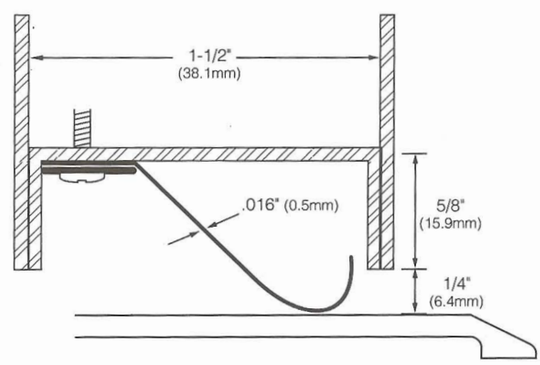

Finishes Codes • M - Mill Finish Brass (Bronze)

Interlocking Weatherstripping

711S
A,D,G

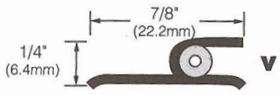

Typical Application

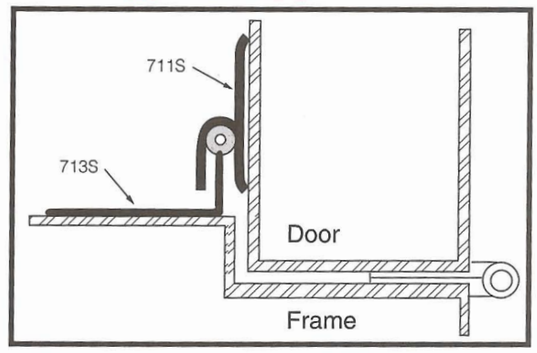

713S
A,D,G,M

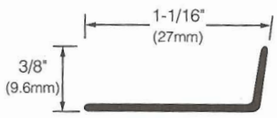

715S
D,G,M,X

UL

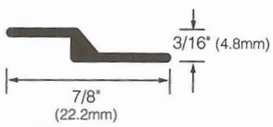

Typical Application

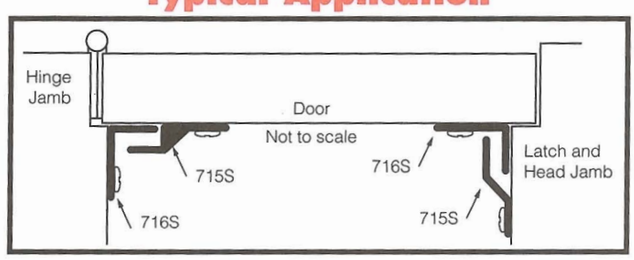

716S
D,G,X

UL

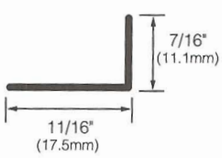

Maximum Length Available: 96"

717S
A,D,G

UL

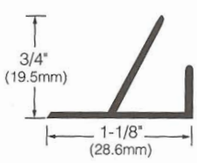

Typical Application

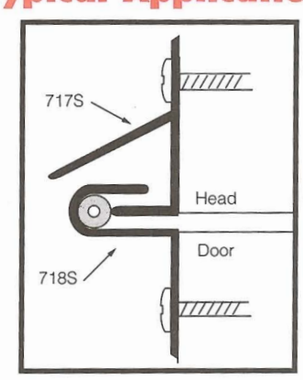

718S
A,D,G

UL

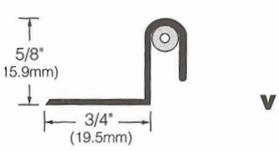

Insert Codes • **V-** Vinyl
Finishes Codes • **A-** Mill Finish Aluminum • **D-** Dark Bronze Anodized Aluminum • **G-** Gold Anodized Aluminum • **M -** Mill Finish Bronze • **X-** Clear Anodized Aluminum

Press-On Weatherstrip

Pressure sensitive adhesive for quick and easy installation.
Not recommended for unsealed or porous applications

721B Brown
721G Gray
721S Charcoal
721T Tan
721W White

UBC 7.2 1997 PART 1 PART 2

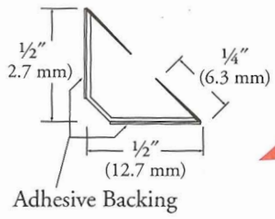

NEW!

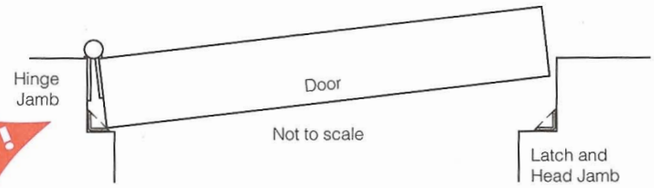

723B Brown
723G Gray
723S Charcoal
723T Tan
723W White

UBC 7.2 1997 PART 1 PART 2

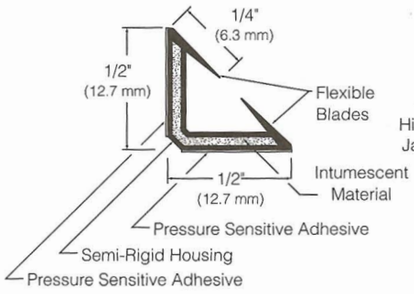

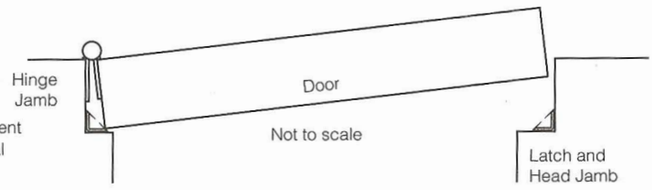

724B Brown
724G Gray
724T Tan
724S Charcoal

UBC 7.2 1997 PART 1

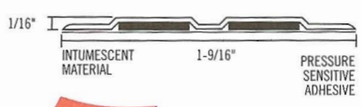

NEW!

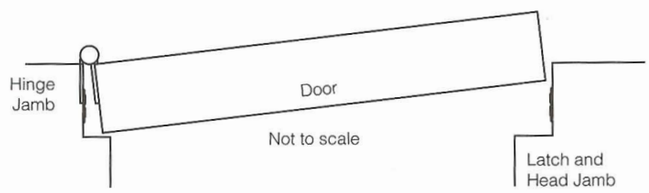

725S Charcoal

UBC 7.2 1997 PART 1

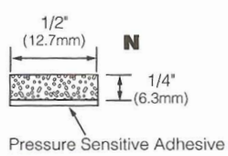

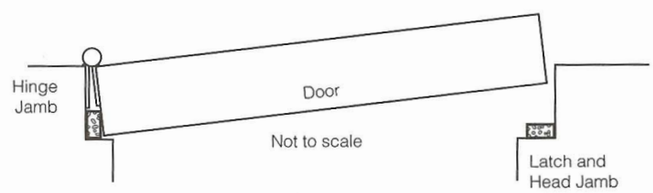

726S Charcoal
726W White

UBC 7.2 1997 PART 1

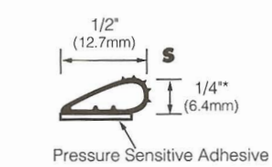

*Compresses to 0.075" (1.9 mm)

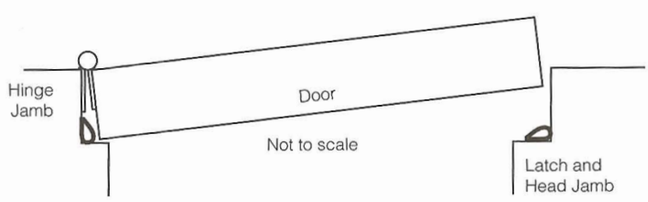

Insert Codes • **N-** Neoprene (closed cell foam) • **S-** Silicone

Press-On Weatherstrip

Pressure sensitive adhesive for quick and easy installation.
Not recommended for unsealed or porous applications

727S
Charcoal
Rigid Polypropylene

UBC 7.2 1997 PART 1

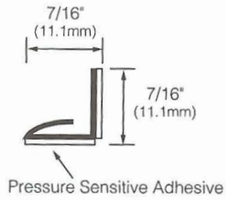

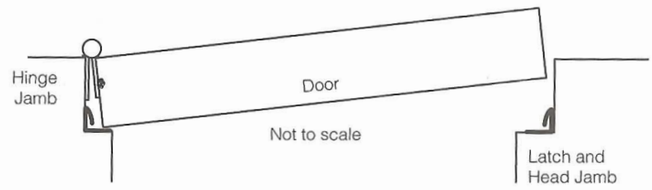

Maximum Length Available: 96"

728S
Charcoal
728W
White

UBC 7.2 1997 PART 1

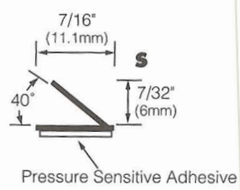

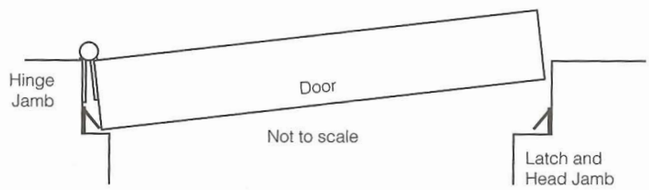

729S
Black (Charcoal)
729B
Brown
729G
Gray
729T
Tan

UBC 7.2 1997 PART 1

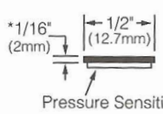

*Intumescent Material
Expands to 1/2" (12.7mm) thick during fires

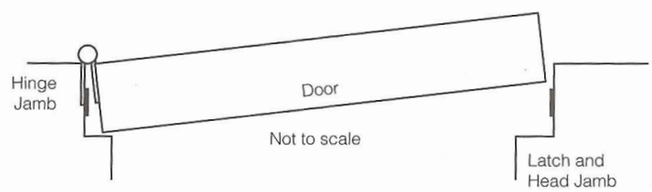

736S
Charcoal
736W
White

UBC 7.2 1997 PART 1

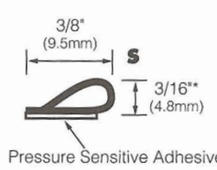

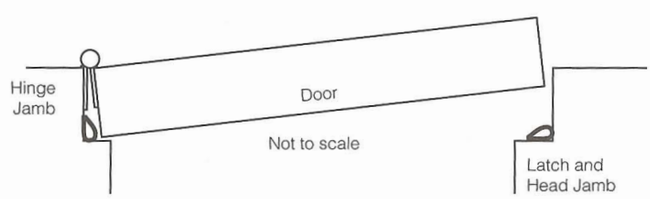

Insert Codes • **N-** Neoprene (closed cell foam) • **S-** Silicone

PH. 1-800-325-9995 or 1-314-772-4400 • Fax 1-800-782-0149 or 1-314-772-0744

rev. 7/02

"THE FIRST FAMILY OF SUPERIOR HARDWARE"

Astragals/Meeting Stiles

Fire Labeling

"The clearance between the door and the frame and between the meeting edges of doors swinging in pairs shall be 1/8" ± 1/16" (3.18mm ± 1.59mm) for steel doors and shall not exceed 1/8" for wood doors."

756S
Order 2 for set
A,D,G

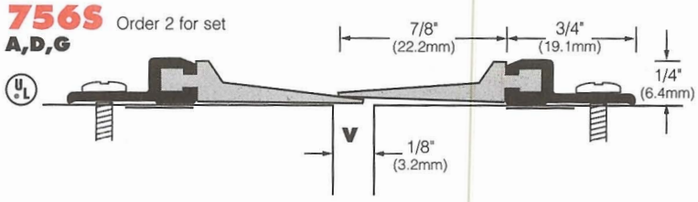

802S
Order 2 for set
A,D,G

UBC 7.2 1997 PART 1

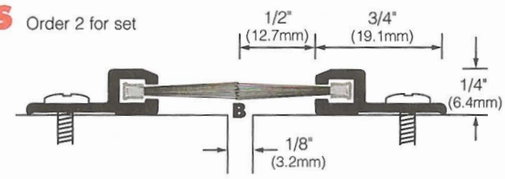

872S
Order 2 for set
D,G,M,X,S

UBC 7.2 1997 PART 1

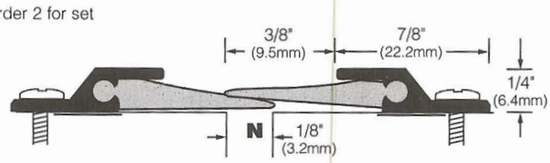

844S
A,D,G

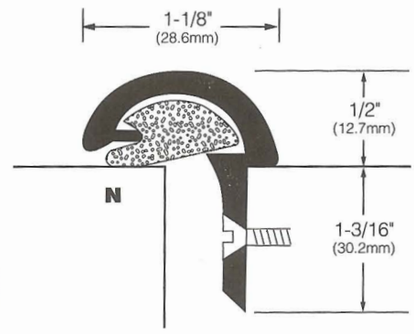

838S
A

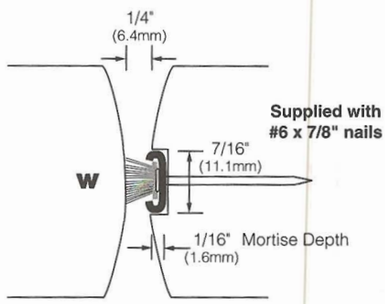

839S
A

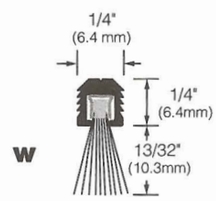

845S
846S
Adjustable
A,D,G

UBC 7.2 1997 PART 1

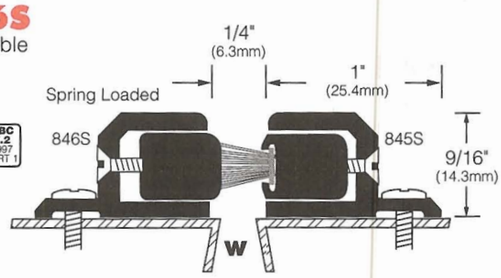

771S
A

UBC 7.2 1997 PART 1

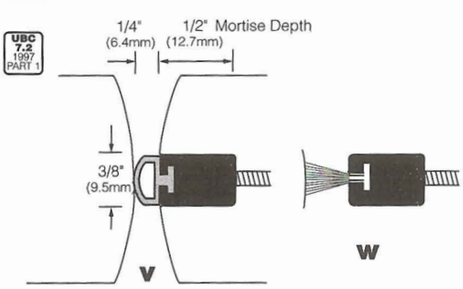

Insert Codes • **B-** Brush • **V-** Vinyl • **N-** EPDM • **S-** Silicone • **W-** Pile (Specify When Ordering)
Finishes Codes • **A-** Mill Finish Aluminum • **D-** Dark Bronze Anodized Aluminum • **G-** Gold Anodized Aluminum • **M-** Mill Finish Brass (Bronze) • **X-** Clear Anodized Aluminum
S- Stainless Steel

Astragals/Meeting Stiles

847S
848S
Adjustable
A,D

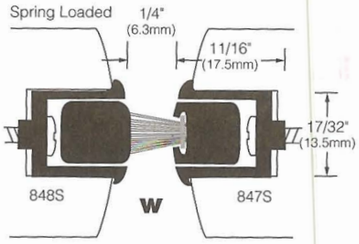

* Mortise Depth = 21/32"

849S
Magnetic
A,D,G

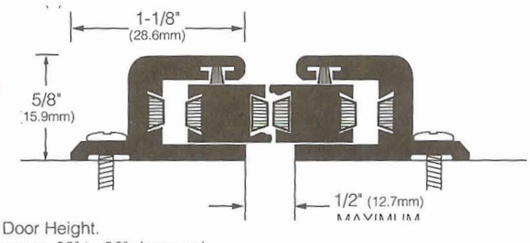

96" Maximum Door Height.
Designed for use on 80" to 96" doors only.
Sets shorter than 80" may not work properly.

774S
A,D

UBC 7.2 1997 PART 1 · UL

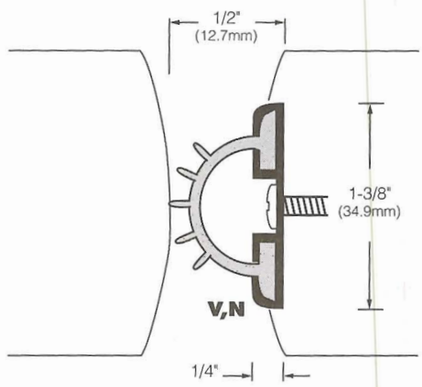

775S
A,D

UL · UBC 7.2 1997 PART 1

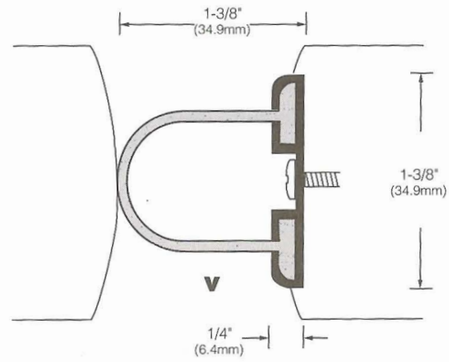

776S
D,G,X

UL · UBC 7.2 1997 PART 1

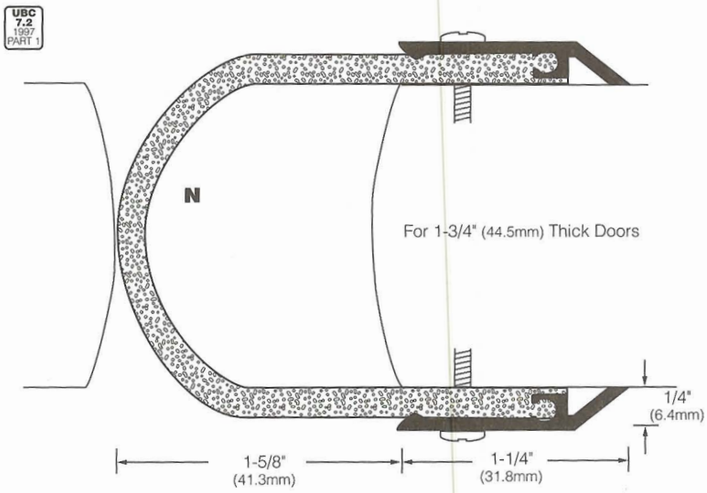

772S
A,D,G

UL · UBC 7.2 1997 PART 1 Vinyl & EPDM

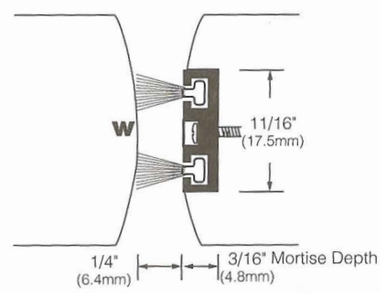

772S
A,D,G

UL · UBC 7.2 1997 PART 1 Vinyl & EPDM

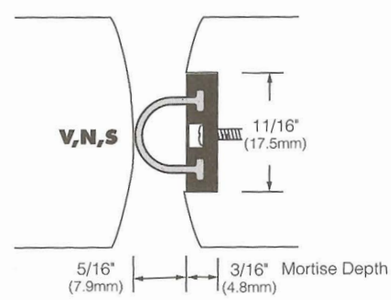

Insert Codes • **V-** Vinyl • **N-** EPDM • **S-** Silicone • **W-** Pile (Specify When Ordering)
Finishes Codes • **A-** Mill Finish Aluminum • **D-** Dark Bronze Anodized Aluminum • **G-** Gold Anodized Aluminum • **M-** Mill Finish Brass (Bronze) • **X-** Clear Anodized Aluminum
S- Stainless Steel • **P-** Primed Steel

Astragals/Meeting Stiles

836S
A,D,G

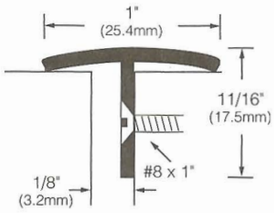

837S
A,D,G

UBC 7.2 1997 PART 1

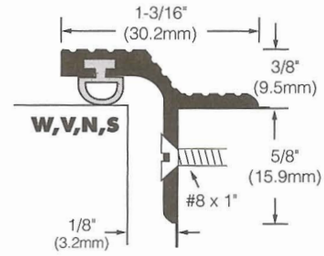

835S
Maximum length = 10 feet

A,D,G,P,S = Stainless Steel, dimensions are 5/32" x 1-5/8" (3.97 x 41.23mm)

UBC 7.2 1997 PART 1

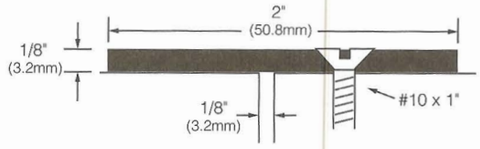

874S
A,D,G,S

UBC 7.2 1997 PART 1

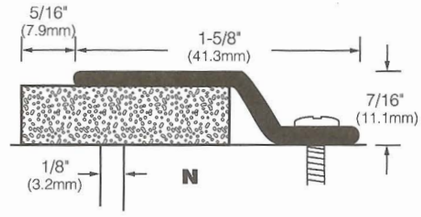

840S
A,D,G

W

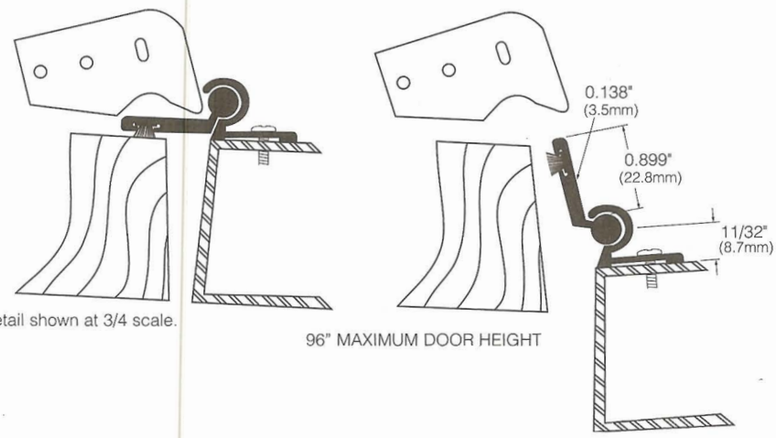

*Detail shown at 3/4 scale.

96" MAXIMUM DOOR HEIGHT

Overhead Drip Guards

717S
A,D

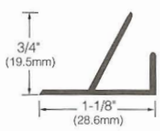

718S
A,D

V

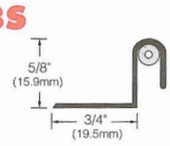

810S
A,D,G

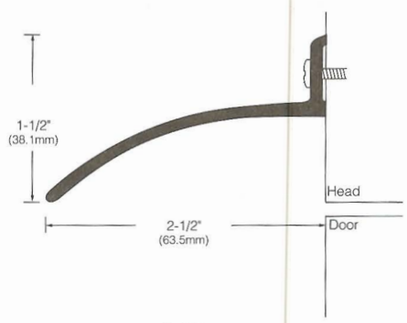

Typical Application

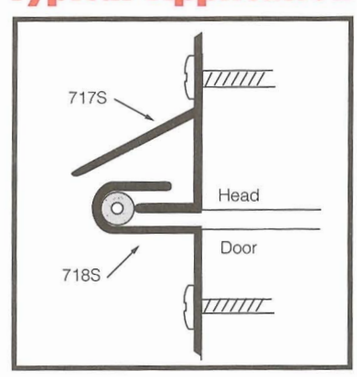

Insert Codes • **V-** Vinyl • **N-** EPDM • **S-** Silicone • **W-** Pile (Specify When Ordering)
Finishes Codes • **A-** Mill Finish Aluminum • **D-** Dark Bronze Anodized Aluminum • **G-** Gold Anodized Aluminum • **M-** Mill Finish Brass (Bronze) • **X-** Clear Anodized Aluminum
S- Stainless Steel • **P-** Primed Steel

Notes

PH. 1-800-325-9995 or 1-314-772-4400 • Fax 1-800-782-0149 or 1-314-772-0744

rev. 7/02

"THE FIRST FAMILY OF SUPERIOR HARDWARE"