Mortise Lock Product Catalog

M Series

FALCON
Locks & Security Products

IR Security & Safety®

PAGE NET

FALCON
Locks & Security Products

M Series

Falcon Lock Philosophy

"Quality locksets delivered on time" is the Falcon Lock creed. Whether you're ordering Falcon Locks for a retrofit application or specifying Falcon Lock for a major construction project, you're guaranteed personal attention through reliable, dependable service. No hassles. No hold-ups. Our top-quality locksets are delivered to specifically meet your schedule and your budget.

Falcon Lock is a member of the IR Security & Safety family, a world-wide division of Ingersoll-Rand Company.

INDEX

Credentials	**3**
ANSI/BHMA	**3**
Underwriters Laboratories	**3**
Federal Specifications	**3**
Americans with Disabilities Act	**3**
General Information	**4**
How to Order	**4**
Finishes	**4**
Handing	**4**
Lock Features and Specifications	**5**
Trim Designs	**6-11**
Heavy Duty Lever Trim	**6-8**
Heavy Duty Knob Trim	**9-10**
Options and Accessories	**11**
Functions	**12-14**
Cylinders	**15-17**
Interchangeable Core	**15**
Standard Cylinders	**16**
Cylinder Cams	**15-16**
Cylinder Guards	**17**
Threaded Cylinder	**17**
Construction Keying	**18**
Conversion Chart	**19**

■ Cover: Quorum Corporate Center

General

For over 30 years, Falcon Lock has been manufacturing reliable lock hardware. Our reputation and commitment to providing a high quality product at a reasonable price, with timely delivery, has been rewriting the standard in our industry. Falcon has one of the most extensive lines available on the market today- with a choice of functions and applications to meet and outreach the most demanding requirements.

Falcon locks feature the ultimate convenience and flexibility of an interchangeable core. Whenever a key is lost or stolen, locks can be re-keyed quickly by removing the core and installing a new one—avoiding locksmith services. Our interchangeable cores are also compatible with other small format interchangeable core products.

We continue to keep a pulse on our market by working closely with various agencies and organizations, such as ANSI/BHMA, who are responsible for the writing of specifications and standards. This allows us to improve and meet the needs of a changing market with reliable and flexible locks, delivered on time, exactly when you need them.

We are members of:

All information and specifications contained in this catalog are subject to change. Please consult our current price list or the factory for comprehensive and current product information.

Falcon M Series mortise locksets conform to all performance and dimensional specifications of ANSI/BHMA A156.13, Series 1000. Falcon subscribes to the testing program under the jurisdiction of BHMA.

BHMA: Builders Hardware Manufacturers Association.

ANSI: American National Standards Institute, Inc.

Underwriters Laboratories, Inc. All Falcon M Series mortise lock sets are UL listed 3 hour A Label (except functions which have a hold-back feature).

Federal Specifications: All Falcon M Series mortise locksets meet or exceed the requirements of FF-H-00106b and FF-H-106C/GEN and are approved by the Veterans Administration and U.S. Army Corps of Engineers.

ADA: Americans with Disabilities Act of 1991. All M Series mortise locksets with lever style trim comply with all handicap codes. Additionally, all lever trims (except Avalon, Capri and Java) comply with Title 19, California State Fire Marshal Code.

M Series

FALCON Locks & Security Products

How to Order

For correct ordering, and to ensure no delays in shipment of your order, the following descriptive data must be listed in the sequence shown. Necessary information can be found in other parts of this catalog.The example below shows an order for 16 each LM locksets in the 521 Entry function, DG (Dane-Gala) trim design in a 626 (satin chrome) finish, 8 RH (right hand) and 8 LH (left hand) to accommodate doors 1-3/4" thick with AA1-AA16 keying.

Quantity: Indicate the quantity required.

Catalog Number: Select catalog number.

Trim Design: Indicate letter of knob or lever design followed by letter of rose or escutcheon design.

Example: DG-D for Dane lever followed by G for Gala rose.

Finish: When the finish is the same for the outside and inside trim, it is shown once (626). For split finishes, the outside is designated first, then the inside (626 x 625).

Latch: Two-piece mechanical anti-friction standard. All catalog numbers shown in this catalog indicate 2-3/4" backset.

Strike: 4-7/8" x 1-1/4" x 1-5/16" lip-to-center with curved lip standard. Optional flat lip strike 1-1/8" L-T-C or strikes with shorter or longer lip lengths are available.

Cylinder Type: For 6 pin, add 6 pin. For 7 pin, add 7 pin.

Door Hand: See chart .

Keying Detail: We suggest using the standard terms developed by the A.H.C. (Architectural Hardware Consultants).
EXAMPLE: AA1 - Grand Master keyed, Master keyed, change key 1.

Interchangeable Core: To order product capable of accepting an interchangeable core, add **"FIC"**(for interchangeable core). To order product with an interchangeable core, add **"WIC"** (with interchangeable core).

Keyway: "G" is standard on regular cylinders, **"A"** is standard on interchangeable cores. Other keyways available. See pricebook.

Additional Keys: Add -"total number of keys required."

Large Bow Keys: Add - "with large bow keys."

How to order example

Qty.	Catalog Number	Trim Design	Finish	Latch	Strike	Cylinder	Door Hand RH	LH	RHR	LHR	Detail
8	LM521	DG	626	STD	STD	6 PIN	X				AA1-AA8 1-3/4" DR
8	LM521	DG	626	STD	STD	6 PIN		X			AA9-AA16 1-3/4" DR

Finishes

Although we apply the finest available protective plating and/or enamel coating to the surface of our products, these finishes have limitations and in time may deteriorate either from exposure to weather, pollution, perspiration, extremes of climate, frequency of use or other factors. Deterioration of these finishes is, therefore, not a defect, but a normal process which is unavoidable. Falcon Lock Company cannot accept responsibility for finish deterioration in these circumstances and therefore the finishes cannot be guaranteed. These products will not be refinished or replaced under our warranty should deterioration of finishes occur. Some finishes are not suggested for areas which are subject to corrosive climate or chemical conditions. We recommend chrome plated or stainless steel finishes for these areas.

Trim Finishes Chart

Description	ANSI No.	Available on
Bright Brass	605	All Trim
Satin Brass	606	All Trim
Satin Bronze	612	All Trim
Satin Bronze Oil Rubbed	613	All Trim
Bright Chrome	625	All Trim
Satin Chrome	626	All Trim
Bright Stainless Steel	629	*
Satin Stainless Steel	630	*

* Avalon, Dane, Java, Kim, Quantum and Sutro Levers, Hana and Troy Knobs.

How to Determine the Hand of a Door

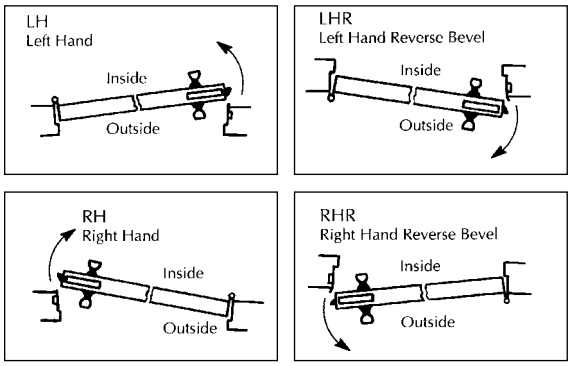

Questions? Call: 800-266-4456 / FAX: 800-777-8229 / or e-mail info@falconlock.com
Falcon Lock Company 2650 Orbiter Street Brea, CA 92821-6265 / Visit us on the Internet at www.falconlock.com

IR Security & Safety

Lock Features and Specifications

M Series

FALCON Locks & Security Products

Lock Features

Door thickness: Standard accommodates thickness of 1-3/4" to 2-1/4" for doors over 2-1/4" thick, consult factory.

Backset: 2-3/4" only.

Case: Cold formed steel, zinc dichromate plated, .090" thick. Optional lead wrapping available.

Hubs: Hardened steel.

Handing: Right hand is standard; left hand optional. Reversible in the field.

Cylinders: Solid brass cylinder and plug. 5, 6 or 7 pin are available on standard cylinders. 6 or 7 pin are available on interchangeable core cylinder. Furnished with two nickel silver keys standard.

Keyways: "G" keyway standard on standard cylinder. "A" keyway standard on I/C cylinder. See price list for optional keyways.

Bind Resistant Trim: Heavy duty through-bolted inserts clamp the trim on the door assuring proper alignment. Designed to bottom out on 1-3/4" doors to prevent door collapse. Provided with 10-32 screws for strength and thread sealant to prevent loosening.

Latch Bolt: Two-piece brass, mechanical anti-friction bolt. 3/4" projection. Optional lead wrapping available.

Dead Bolt: 1" throw, brass with a 1/4" thick hardened steel, free-turning, saw-resistant roller.

Faceplates: (Armored Front) 1-1/4" x 8" brass, bronze and stainless steel adjustable for door bevel. Reinforced by heavy gauge steel with stabilizing ribs.

Strike: Brass, bronze or stainless steel. Meets ANSI AII5.1 for frame preparation. Strike is handed. Optional 1-1/8 lip-to-center reversible flat lip available.

Electrified Functions: Available in 12 or 24 VAC or VDC.

ANSI/BHMA: Meets ANSI/BHMA 156.13, Series 1000.

UL: 3 hour A label.

Falcon Mortise Lock Specifications

Mortise locks shall be Falcon mortise lock series or equal and meet the following requirements:

- Mortise locksets shall meet Grade 1 operational requirement ANSI/BHMA A156.13, Series 1000.
- All mortise locks shall be UL listed (3 hour A Label) except functions "M591" that include a latch hold-back feature.
- Lockset cases shall be of cold rolled formed steel .090" thick. All steel interior parts and case shall be double treated with zinc plating and chromate conversion coating to resist rust.
- Dead bolts shall be 1" projection with two hardened steel rollers. Latch bolts shall be 3/4" projection, two piece metal anti-friction type.
- Lock cases shall be interchangeable for either knobs or lever applications without changing parts or modifying chassis in any way.
- On functions where "stopworks" feature is required, the changing of the outside trim from locked to unlocked and vice-versa, must be performed via buttons located in the face of the mortise case armor front plate.
- Where required, trim is to be interchangeable and compatible so that both rose and escutcheon trim can be furnished on the same lock/latchset.
- Trim shall be through-bolted with (2) 10–32 screws coated with thread sealant to provide strength and resistance to loosening. Inner and outer trim shall "bottom-out" on 1-3/4" doors to prevent door collapse.
- All lever trim shall have individual heavy-duty springs behind the rose (escutcheon) for lever return and to prevent lever sag. All lever trim shall be cast, forged or wrought.
- Spindles for lever trim shall be individual half-spindles on each side, spring actuated to prevent binding and designed to shear at 600+-20 inch lbs. to prevent damage to lock chassis.

Acceptable manufacturer: **FALCON LOCK COMPANY.**

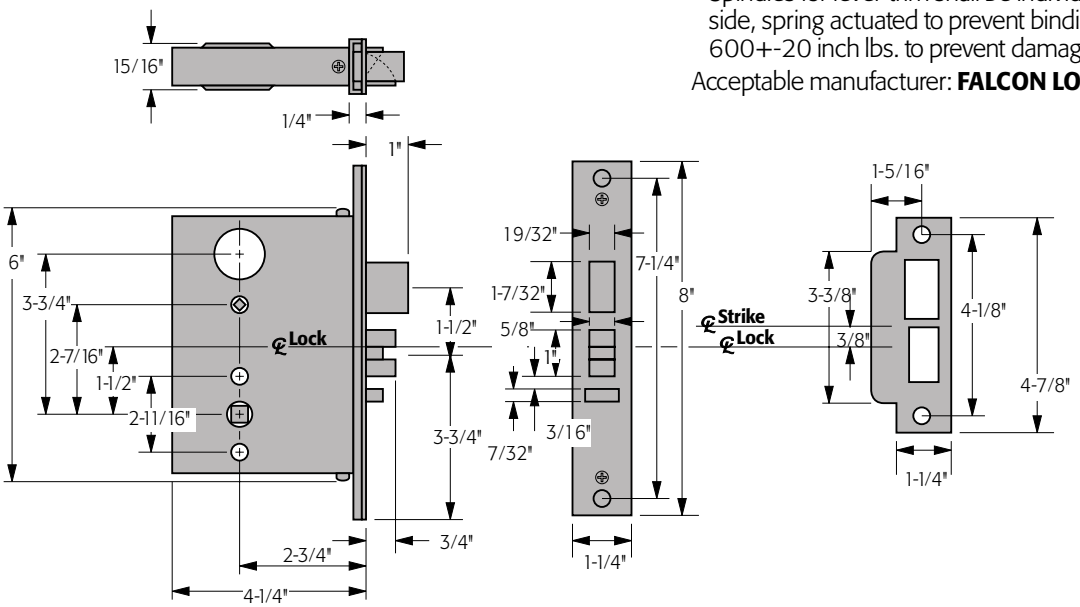

Note: If smoke seal, weatherstripping, acoustical material or silencers are used on the door or frame, care must be taken in the installation so that they will not interfere with the ease in which the latch bolt enters the strike.

M Series

FALCON
Locks & Security Products

Heavy Duty Lever Trim (LM)

Cast or forged levers (Avalon, Capri, Dane and Quantum) and wrought brass, bronze or stainless levers (Kim, Java and Sutro), wrought rose and wrought escutcheons are standard.

Heavy Duty Lever Combinations

		Levers						
		Avalon	Capri	Dane	Java	Kim	Quantum	Sutro
Rose	Gala	AG	CG	DG	JG	KG	QG	SG
Escutcheon	Napa	AN	CN	DN	JN	KN	QN	SN

Capri-Gala and Capri-Napa designs are not available in stainless steel.

QG
Quantum-Gala

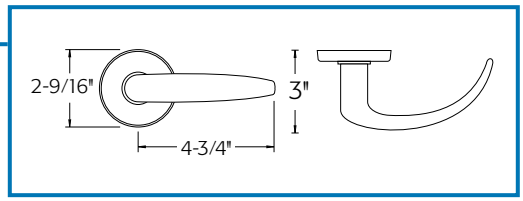

SG
Sutro-Gala

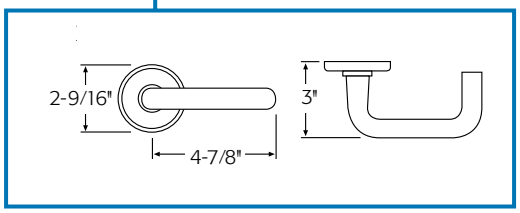

KG
Kim-Gala

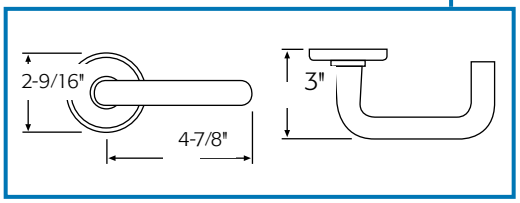

CG
Capri-Gala

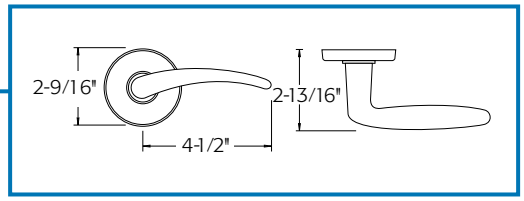

Questions? Call: 800-266-4456 / FAX: 800-777-8229 / or e-mail info@falconlock.com
Falcon Lock Company 2650 Orbiter Street Brea, CA 92821-6265 / Visit us on the Internet at www.falconlock.com

IR Security & Safety

M Series

FALCON
Locks & Security Products

AG
Avalon-Gala

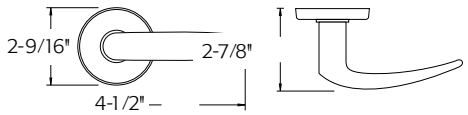

CN
Capri-Napa

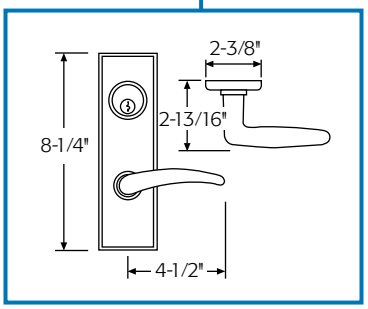

DG
Dane-Gala

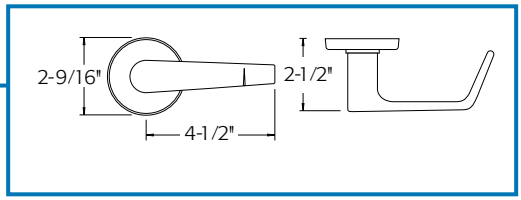

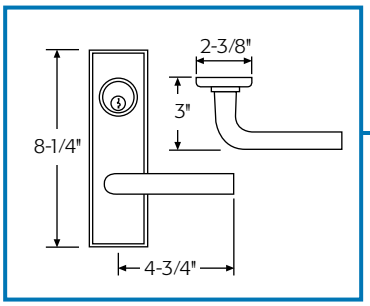

JN
Java-Napa

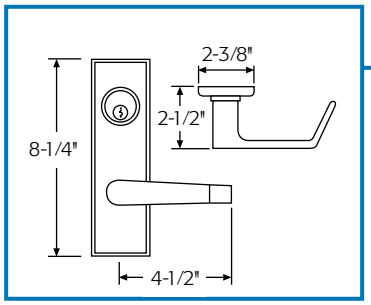

DN
Dane-Napa

M Series

FALCON
Locks & Security Products

AN
Avalon-Napa

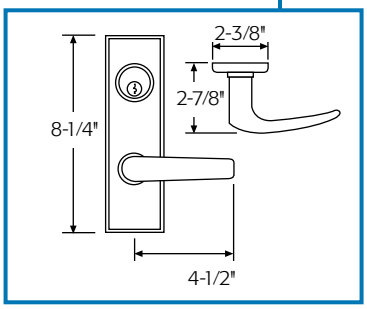

KN
Kim-Napa

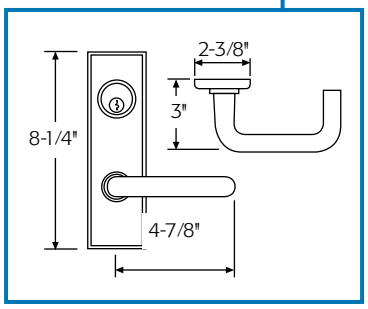

SN
Sutro-Napa

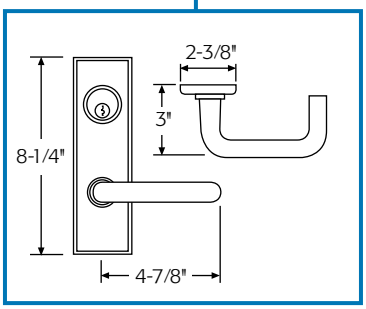

QN
Quantum-Napa

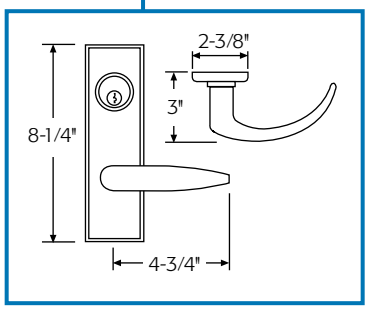

Questions? Call: 800-266-4456 / FAX: 800-777-8229 / or e-mail info@falconlock.com
Falcon Lock Company 2650 Orbiter Street Brea, CA 92821-6265 / Visit us on the Internet at www.falconlock.com

IR Security & Safety

M Series

FALCON
Locks & Security Products

Heavy Duty Knob Trim (MM)

Wrought knobs (.055 thickness), wrought roses and wrought escutcheons are standard.

Heavy Duty Knob Combinations

		Levers		
		Elite	Hana	Troy
Rose	Gala	EG	HG	TG
Escutcheon	Napa	EN	HN	TN

Elite-Gala and Elite-Napa designs are not available in stainless steel.

EG
Elite-Gala

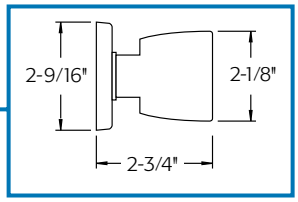

TG
Troy-Gala

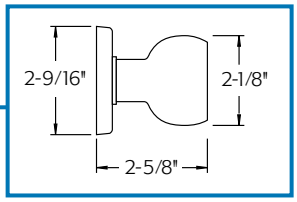

HG
Hana-Gala

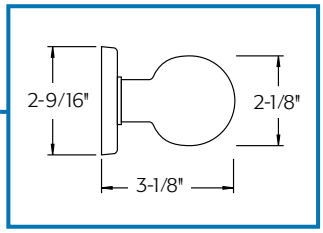

M Series

FALCON
Locks & Security Products

HN
Hana-Napa

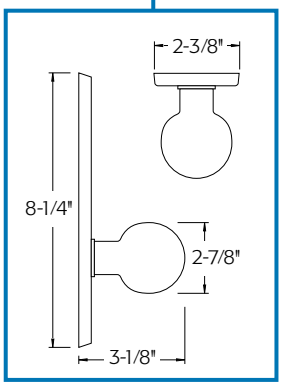

EN
Elite-Napa

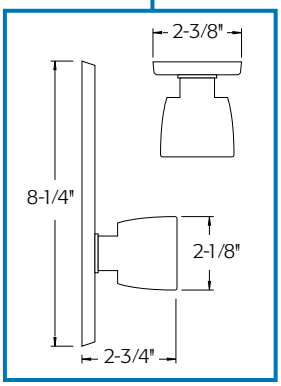

TN
Troy-Napa

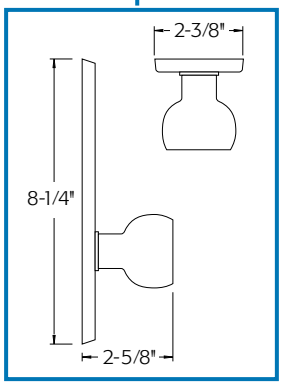

Questions? Call: 800-266-4456 / FAX: 800-777-8229 / or e-mail info@falconlock.com
Falcon Lock Company 2650 Orbiter Street Brea, CA 92821-6265 / Visit us on the Internet at www.falconlock.com

IR Security & Safety

FALCON
Locks & Security Products

M Series

Abrasive Coated Knobs and Levers

All knobs and levers are available with abrasive coating to identify entrances to hazardous areas for the handicapped.

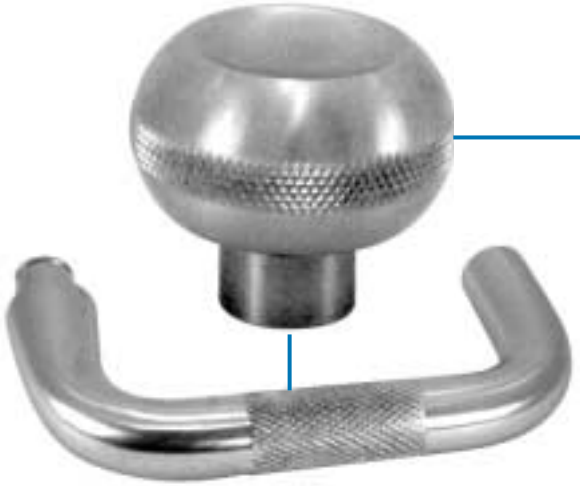

Knurled Knobs and Levers

All heavy duty knobs and Avalon, Dane, Quantum and Sutro levers are available knurled to identify entrances to hazardous areas for the handicapped.

Lead Wrapping

M Series locksets and latchsets are available with lead-wrapping for use on X-ray room doors (or similar situations).

Trim Packages

Both knob and lever trim packages are available to allow complete replacement of inner and outer trim on any lock function. Packages include inside and outside trim, spindle and mounting screws. Please see current price book for more details.

Strikes

Manufactured from heavy gauge brass, bronze and stainless steel. Meets ANSI Standard A115.1 for frame preparation. Strikes are available with lip lengths shorter or longer than our standard lengths. Available finishes: 605, 606, 612, 613, 625, 629, 630.

Optional Strikes

1-1/8" lip-to-center reversible flat lip.

M Series

FALCON Locks & Security Products

To order Falcon M Series locksets, please consult page 4 for ordering information and assistance.

{ Indicates interchangeable core available.

Catalog Number Prefixes: Add the following prefix for the appropriate trim style.
MM (example: MM521) = Knob Trim
LM (example: LM521) = Lever Trim

Note: If a special function is required and not listed here, please contact the factory for assistance.

Catalog Number	Function	Description	ANSI No. & Grade
M101		**Passage/Closet Latchset** Latch bolt by levers at all times.	F01-1 F01-2
M161		**Connecting Room/Exit Latch** Deadlocking latch bolt by inside knob/lever. Non-removable blank plate outside.	
M301		**Privacy Lock** Latch bolt by knobs/levers, dead bolt by turn inside or emergency key (012727-000-30) outside.	F02-1 F02-2
M311		**Privacy, Bedroom or Bath Lock** Latch bolt by knobs/levers. Dead bolt by turn from inside and emergency key (012727-000-30) outside. Rotating inside knob/lever retracts both bolts.	F19-1 F19-2
M321		**Privacy Lock** Latch bolt operated by knob/lever from either side except when outside knob/lever is locked by inside T-turn. Operating inside knob/lever, closing door or operating outside emergency release unlocks outside knob/lever. Emergency key (012727-000-30) furnished with lock.	F22-1 F22-2
M361	{	**Exit Lock** Latch bolt operated by knob/lever from either side except when outside knob/lever is made inoperative by buttons in lock face. Dead bolt projected by key from either side. Dead bolt retracted by key from outside. Both bolts retracted by inside knob/lever. Deadlocking latch.	F11-1 F11-2
M371	{	**Store Door Lock** Latch bolt by knobs/levers. Dead bolt by key from either side.	F14-1 F14-2
M381	{	**Entry/Restroom Lock** Deadlocking latch bolt by knobs/levers except when outside knob/lever is locked by key inside, then by key outside.	F09-1 F09-2
M411	{	**Asylum Lock** Deadlocking latch bolt by key from either side. Both knobs/levers rigid.	
M431	{	**Classroom Security Lock with Deadbolt** Latch bolt retracted by knob/lever from either side, except when outside knob/lever is locked; latch bolt then retracted by key outside or key or rotating knob/lever inside. Deadbolt thrown or retracted by key either side, or by rotating knob/lever inside.	
M441	{	**Classroom Security Lock** Latch bolt retracted by knob/lever from either side, except when outside knob/lever is locked; latch bolt then retracted by key outside or inside, or by rotating knob/lever inside.	

Questions? Call: 800-266-4456 / FAX: 800-777-8229 / or e-mail info@falconlock.com
Falcon Lock Company 2650 Orbiter Street Brea, CA 92821-6265 / Visit us on the Internet at www.falconlock.com

IR Security & Safety

M Series

FALCON Locks & Security Products

Indicates interchangeable core available.

Catalog Number	Function	Description	ANSI No. & Grade
M451		**Hotel/Motel Lock** Deadlocking latch bolt by inside knob/lever or key outside. Outside knob/lever rigid.Dead bolt by turn inside or emergency key outside. Projecting dead bolt displays occupancy indicator and shuts out all keys except emergency. Rotating inside knob/lever retracts both bolts.	F15-1 F15-2
M521		**Entry/Office Lock** Deadlocking latch bolt by knobs/levers except when outside knob/lever is locked by buttons in face, then by key outside.	F04-1 F04-2
M531		**Entry/Office Lock** Latch bolt by knobs/levers except when outside knob/lever is made inoperative by buttons in face. Dead bolt by key outside and turn inside. Rotating inside knob/lever retracts both bolts. Deadlocking latch.	F10-1, F10-2 F12-1, F12-2, F20-1, F20-2
M541		**Entry/Office Lock** Latch bolt by knobs/levers. Dead bolt by key outside or turn inside.	F21-1 F21-2
M551		**Entry Lock** Latch bolt by knob/lever both sides except when dead bolt is projected/retracted by key outside or T-turn inside. When dead bolt is projected both inner and outer knob/lever are rigid. Deadlocking latch.	
M561		**Classroom Lock** Deadlocking latch bolt by knobs/levers. Outside knob/lever locked by key outside. Inside knob/lever always free.	F05-1 F05-2
M571		**Dormitory Lock** Latch bolt by knobs/levers except when outside knob/lever is locked by projecting dead bolt. Key outside retracts dead bolt and unlocks outside knob/lever. Rotating inside knob/lever retracts both bolts.	F13-1 F13-2
M581		**Storeroom Lock/Exit Lock** Deadlocking latch bolt by inside knob/lever or key outside. Outside knob/lever rigid.	F07-1 F07-2
M591		**Storeroom Lock w/Hold Back** Latch bolt operated by key outside or by operating inside knob/lever. Outside knob/lever is always inoperative. Latch bolt may be held in retracted position by key from outside. Deadlocking latch.	
M621		**Front Door Lock** Latch bolt is operated by knob/lever from either side except when outside knob/lever is made inoperative by a stop or mechanical means other than key. Dead bolt is operated by turn inside. Key outside operates both bolts.	F08-1 F08-2
M631		**Dormitory Lock** Latch bolt by knob/lever inside and key outside. Inside knob/lever free. Outside knob/lever rigid. Dead bolt by key outside. Rotating inside knob/lever retracts both bolts. Deadlocking latch.	
M641		**Dormitory Lock** Latch bolt by knob/lever inside and key outside. Inside knob/lever free. Outside knob/lever rigid. Dead bolt by key outside or T-turn inside. Rotating inside knob/lever retracts both bolts. Deadlocking latch.	

M Series

FALCON Locks & Security Products

Indicates interchangeable core available.

Catalog Number	Function	Description	ANSI No. & Grade
M711		**Privacy Lock (Special)** Latch bolt operated by key from outside or by operating inside knob/lever. Outside knob/lever is always in operative. Dead bolt operated by T-turn inside or emergency release outside. Key outside does not operate dead bolt. Operating inside knob/lever retracts both bolts. Deadlocking latch.	
M771		**Dormitory Lock** Latch bolt operated by key from outside or by operating inside knob/lever. Outside knob/lever is always inoperative. Dead bolt by key outside. Operating inside knob/lever retracts both bolts.	
M811		**Double Cylinder-Fail Safe** Latch bolt operated by knob/lever from either side except when electrically locked, then both knobs/levers become inoperative. When lock is electrically locked, key in either cylinder retracts latch bolt. Deadlocking latch.	
M821		**Double Cylinder-Fail Secure** Both knobs/levers inoperative except when electrically unlocked, then latch bolt operated by knob/lever from either side. Latch bolt by key in either cylinder when lock is locked. Deadlocking latch.	
M851		**Storeroom-Fail Safe** Latch bolt operated by knob/lever from either side except when outer knob/lever is electrically locked. When outer knob/lever is locked, latch bolt retracted by key in cylinder outside. Deadlocking latch.	
M881		**Storeroom-Fail Secure** Latch bolt operated by knob/lever from inside except when outer knob/lever is electrically unlocked, then latch bolt from either side. When locked, key in cylinder outside retracts latch bolt. Deadlocking latch.	
M911		**Schoolhouse Safety Deadlock** Dead bolt retracted by key outside or turn inside. Dead bolt projected by key outside.	
M921		**Deadlock** Dead bolt by key outside.	F18-1 F18-2
M931		**Deadlock** Dead bolt by key from either side.	F16-1 F16-2
M941		**Deadlock** Dead bolt by key outside or turn inside.	F17-1 F17-2
M961		**Deadlock** Dead bolt by turn inside.	
M12/M18	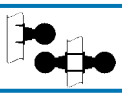	**Dummy Trim** Single or double available.	

Questions? Call: 800-266-4456 / FAX: 800-777-8229 / or e-mail info@falconlock.com
Falcon Lock Company 2650 Orbiter Street Brea, CA 92821-6265 / Visit us on the Internet at www.falconlock.com

IR Security & Safety

M Series

FALCON Locks & Security Products

Mortise Cylinders —Interchangeable Cores

All Falcon M Series keyed locks are available with mortise cylinders that will accept Falcon interchangeable cores as well as some other manufacturers' Figure 8 type cores. Interchangeable core cylinders are available in 6 or 7 pin configurations, for increased security by quick change of keying.

Interchangeable core cylinders allow the capability of immediately changing the keying on any door without the necessity of disassembling the lock. The core is removed by use of a special "control" key. Rotating the key to the right and gently pulling will disengage the core from the housing. The replacement core is then inserted and the control key rotated to the left to "lock" the core in place and the control key is removed.

To order: Falcon mortise locks with interchangeable cores, add "WIC" 6 (or 7) pin in detail area of order.

To order: Falcon mortise locks for interchangeable core, less core, add "FIC" 6 (or 7) pin in detail area of order.

All keyed cylinders are supplied with two nickel silver keys.

Interchangeable Core M Series Function/Cam Chart

Catalog Number	Outside Cam No.	Inside Cam No.
M361	A12667-007-00	A12667-007-00
M371	A12667-007-00	A12667-007-00
M381	A20278-000-00	A12667-003-00
M411	A12667-003-00	A12667-003-00
M451	*A12667-007-00	
M521	A12667-003-00	
M531	A12667-007-00	
M541	A12667-007-00	
M551	A12667-007-00	
M561	A12667-003-00	
M571	A12667-007-00	
M581	A12667-003-00	
M591	A12667-003-00	
M621	A12667-007-00	
M631	A12667-007-00	
M641	A12667-007-00	
M711	A12667-007-00	
M771	A12667-007-00	
M811	A12667-003-00	A12667-003-00
M821	A12667-003-00	A12667-003-00
M851	A12667-003-00	
M881	A12667-003-00	
M911	A12667-007-00	
M921	A12667-007-00	
M931	A12667-007-00	A12667-007-00
M941	A12667-007-00	

*Special cylinders with shut-out feature for hotel guest room door locks required

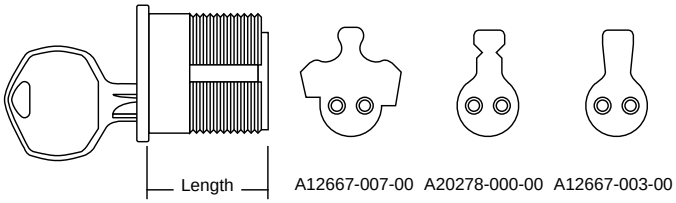

Catalog Number	Length
Standard Cylinder*	
C986	1-1/4"
C987	1-3/8"
C988	1-1/2"
C990	1-3/4"
C992	2"
Hotel/Motel Cylinders*	
C261	1-1/2" RH
C262	1-5/8" RH
C264	1-1/2" LH
C265	1-5/8" LH

Special hotel/motel cylinders furnished with cam A12667-007-00.

Note: To order the cylinder housing only, order by listing catalog number for required length and cam number as indicated in the chart. Also specify finish and pin condition. EXAMPLE: No. C987 with A12667-007-00, 626, for 7 pin interchangeable core.

M Series

FALCON Locks & Security Products

Mortise Cylinders - Standard

Only the finest materials are used in the manufacture of our cylinders. Modern equipment and gauging ensure consistent, reliable production of our entire line of cylinders. We offer a full and complete line of spacer rings, cylinder guards and spring washers, as well as numerous cams to fulfill the requirements of most applications. Standard mortise cylinders are furnished as 5 or 6 pin as standard. 7 pin cylinders are available. All keyed cylinders are supplied with two nickel silver keys.

M Series Function/Cam Chart

Catalog Number	Outside Cam No.	Inside Cam No.
M361	A12667-007-00	A12667-007-00
M361	A09894-001	A09894-001
M371	A09894-001	A09894-001
M381	A20065-000	A09897-000
M411	A09897-000	A09897-000
M451	*A09894-001	
M521	A09897-000	
M531	A09894-001	
M541	A09894-001	
M551	A09894-001	
M561	A09897-000	
M571	A09894-001	
M581	A09897-000	
M591	A09897-000	
M621	A09894-001	
M631	A09894-001	
M641	A09894-001	
M711	A09894-001	
M771	A09894-001	
M811	A09897-000	A09897-000
M821	A09897-000	A09897-000
M851	A09897-000	
M881	A09897-000	
M911	A09894-001	A09894-001
M921	A09894-001	
M931	A09894-001	A09894-001
M941	A09894-001	

*Special cylinders with shut-out feature for hotel guest room door locks.
Available for 6 or 7 pin systems only in the following sizes:
6 Pin—A14250 • (1-1/8"), A14251 • (1-1/4"), A14252 • (1-3/8")
7 Pin—A14253 • (1-3/8")

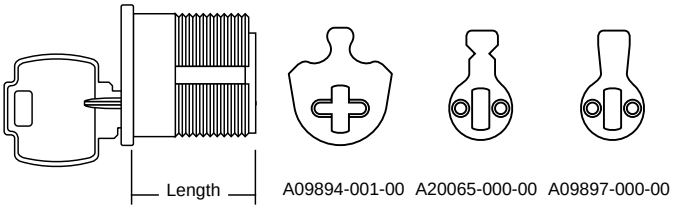

Catalog Number	Length
985	1-1/8"
986	1-1/4"
987	1-3/8"
988	1-1/2"
990	1-3/4"
992	2"

Note: To order cylinder separately, order by listing catalog number for required length and cam number as indicated in chart above. Also, specify finish and number of pins.
EXAMPLE: 986 with A09894-001-00, 626, 6 pin

Questions? Call: 800-266-4456 / FAX: 800-777-8229 / or e-mail info@falconlock.com
Falcon Lock Company 2650 Orbiter Street Brea, CA 92821-6265 / Visit us on the Internet at www.falconlock.com
IR Security & Safety

M Series

FALCON Locks & Security Products

Cylinder Guards*

Falcon offers two different types of cylinder guards in various thickness to work with sectional or escutcheon trim, different door ranges and various cylinder lengths. Our standard cylinder, 985, is 1-1/8" long. The factory will furnish the correct cam(s) and cylinder guard for the function and door thickness specified. The A08790 and A08794 cylinder guards in bar stock brass are available to accommodate different cylinder lengths and door thicknesses as shown.

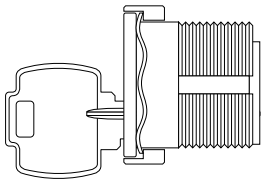

985 Cylinder with A08790 Cylinder Guard.

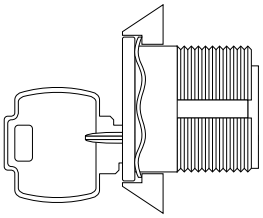

985 Cylinder with A08794 Cylinder Guard.

A08790

A08794

Cylinder Guard Application Chart**

Door Thickness	985 1-1/8" (cyl.)	986 1-1/4" (cyl.)	987 1-3/8" (cyl.)	988 1-1/2" (cyl.)
1-1/2"	A08794-001 (13/32")	A08794-002 (17/32")		
1-3/4"	A08794-000 (9/32")	A08794-001 (13/32")	A08794-002 (17/32")	
2"		A08794-000 (9/32")	A08794-001 (13/32")	A08794-002 (17/32")
2-1/4"			A08794-000 (9/32")	A08794-001 (13/32")
2-1/2"				A08794-000 (9/32")

Note: Dimensions listed for A08794 also apply to A08790.

* Cylinder guards measure 3/16" from shoulder to top. A wavy spring washer is furnished with either cylinder guard.
** Single cylinder functions.

Thumb Turn/Threaded Cylinders

Standard thumb turn threaded cylinders for dead bolt operation of M Series locks may be used in lieu of surface mounted thumb turns. Furnished with A09894-1 cam. Available in length indicated and all M Series finishes.

Thumb turn cylinders for inside of M911 function are handed.

Catalog Number	Length
986-T	1-1/4"
973	1-1/8" RH (Turns counter-clockwise)
974	1-1/8" LH (Turns clockwise)

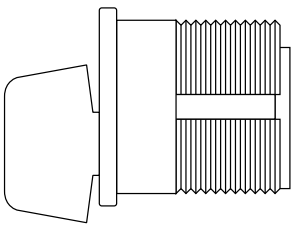

FALCON
Locks & Security Products

M Series

Construction Keying

Falcon offers three different construction key systems depending on the size of and application within the project. Both systems permit the installation and use of regular door locks during construction, yet completely preserve the security of the keying system for the ultimate building owner. The Master, Grand Master and change keys are never with the locks during the construction phase of a building. Only the "construction" keys are sent to the job site. Where the job permits, we will utilize the "Lost Pin System" as our standard system for construction keying. Larger or more complicated jobs may require the use of our "Blockokey® System" for construction keying. Where security is of little concern, like for interior doors the "Disposable Construction Core" is recommended.

"Disposable Construction" Interchangeable Cores

This newly designed disposable construction core (1408) is an inexpensive alternative to interior keyed construction cores. This core should be used on interior door applications or where security on a site is not a concern. No keys need to be issued. The disposable core is inserted in the lever or knob and is operated by a thumb turn, which retracts the latch bolt. Please use either brass or permanent construction cores on exterior doors or secured areas.

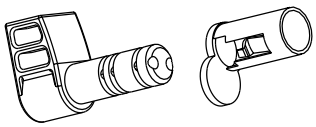

Locks with "Lost Pin System"

Our "lost" pin construction key system consists of one construction pin and a shallow hole in the side of the plug.

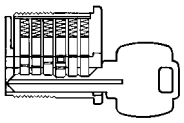

Construction Key—**KB566**

When the "construction" key is used, the construction pin is always in the cylinder plug, sitting on top of the bottom pin.

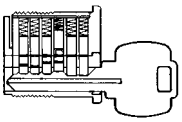

Master Key—**KB578**

When the Master key is inserted, the construction pin is pushed up into the cylinder housing. As the Master key is rotated to the right, the construction pin will drop into the hole in the plug, thereby eliminating any future use of the construction key.

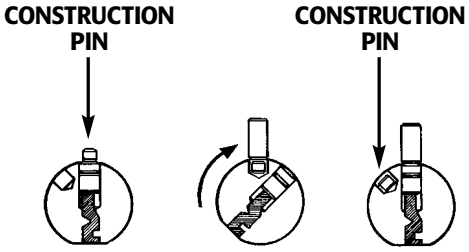

Locks with Blockokey® Cylinders

All lock cylinders on a specific project are operable by a special "project key." Duplicates of this key may be assigned by the building contractor to workmen and subcontractors as required. No regular change keys or Master keys are needed on the job. This eliminates the possibility of subsequent exposure from lost or stolen keys.

How to order locks with Blockokey® Cylinders

Blockokey® locksets are ordered by adding the word "Blockokey" after the balance of the ordering information.
EXAMPLE: 72 Each B511 D 626 1AA-72AA (Blockokey)

How with Blockokey® Cylinders are used

1.

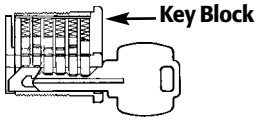

Project Key—**KB531**

Lock cylinder is operated by the special "project key." The last two pins in the cylinder are held inoperative by the key block.

2.

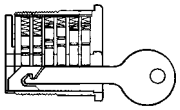

Removal Tool—**KB536**

The special "project key" is canceled out by removal of the key block. A key block removal tool is furnished with the Master keys for the locks. Simply push the removal tool into the keyway, then withdraw it to remove the block. Thereafter, the "project key" will no longer operate the lock cylinder.

3.

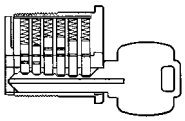

Change or Master Key—**KB578**

Cylinder is now only operable by the regular change key or Master key.

Questions? Call: 800-266-4456 / FAX: 800-777-8229 / or e-mail info@falconlock.com
Falcon Lock Company 2650 Orbiter Street Brea, CA 92821-6265 / Visit us on the Internet at www.falconlock.com

FALCON
Locks & Security Products

M Series

M Series Grade 1 Heavy Duty Mortise Locks

ANSI No./Grade	Function	Falcon	Arrow	Best	Corbin/ Russwin	Marks	Sargent	Yale
F01-1	Passage	M101	A-B01	34-35N	ML2010	5-55N	8215 & 7815	8701
	Communicating/Exit	M161	A-B07	34-35Y	–	–	8213 & 7813	8728
F02-1	Privacy	M301	A-B02	34-35L	–	5-55L	8265 & 7865	8702
F19-1	Privacy	M311	–	34-35LF	ML2030	5-55LF	–	8702
F22-1	Privacy	M321	–	–	ML2060	5-55LJ	8265 & 7865	–
F11-1	Exit	M361	–	34-37W	–	5-55FC	–	–
F14-1	Store Door	M371	A-B31	34-37C	ML2022	5-55C	8226 & 7826	8760-2
F09-1	Entry/Restroom	M381	A-B32	34-37G	ML2042	5-55G	8216 & 7816	8717-2
	Asylum	M411	A-B33	34-37WW	ML2032	–	8217 & 7817	8730-2
	Classroom Security w/Deadbolt	M431	A-B32	–	ML2072	–	–	–
	Classroom Security	M441	–	–	–	–	–	–
F15-1	Hotel/Motel	M451	A-B15	34-37HJ	ML2029	5-55H	50-8250 & 50-7850	8720
F04-1	Entry/Office	M521	A-B22	34-37E	ML2051	5-55E	8205 &7805	8707
F10-1, F12-1, F20-1	Entry/Office	M531	A-B21 A-B11 A-B20	– 34-37F –	ML2048 ML2067 –	5-55A 5-55F 5-55FD	– 8245 & 7845 8243 & 7843	8747 8767
F21-1	Entry/Office	M541	A-B13	34-37B	ML2024	5-55B	8224 & 7824	8760
	Entry	M551	–	–	–	–	–	–
F05-1	Classroom	M561	A-B17	34-37J	ML2055	5-55J	8237 & 7837	8708
F13-1	Dormitory	M571	A-B19	34-37FW	ML2065	5-55FW	8225 & 7825	8722
F07-1	Storeroom	M581	A-B12	34-37EW	ML2057	5-55EW	8204 & 7804	8705
	Storeroom w/Hold back	M591	A-B34	–	–	–	–	–
F08-1	Front Door	M621	A-B21	34-37A	–	5-55A	–	8767
	Dormitory	M631	–	–	–	–	–	–
	Dormitory	M641	–	34-37FD	–	–	–	–
	Privacy	M711	–	–	–	–	–	–
	Dormitory	M771	–	–	–	–	–	–
	Asylum-Fail Safe	M811	–	34-37WWEL	–	–	–	–
	Asylum-Fail Secure	M821	–	34-37WWEU	–	–	–	–
	Storeroom-Fail Safe	M851	A-B17-177	34-37EWEL	–	–	–	–
	Storeroom-Fail Secure	M881	A-B17-178	34-37EWEU	–	–	–	–
F29-1	Deadlock-Safety	M911	–	–	ML2017	5-55SC	8203	8713ST
F18-1	Deadlock-Blank	M921	A44	34-37S	ML2011	5-55S	8220	8714
F16-1	Deadlock-Double Cyl.	M931	A42	34-37T	ML2012	5-55T	8222	8714-2
F17-1	Deadlock	M941	A41	34-37P	ML2013	5-55P	8221	8715
	Deadlock	M961	–	–	–	–	–	–
	Dummy-Single	M12	A-B08	–	ML2050	–	8293 & 7893	855
	Dummy-Double	M18	A-B09	–	ML2070	–	8294 & 7894	836 or 838

All effort has been made to make this information comprehensive. Since no two products are exactly alike, this data represents those products which are similar. This information was obtained from trade services and is not guaranteed nor meant to represent any product as equal to any other product.

FALCON
Locks & Security Products

Falcon Fits

2650 Orbiter Street, Brea, CA 92821-6265
Phone 714-572-6008/800-266-4456
US FAX 800-777-8229/International FAX 714-572-0482
www.falconlock.com

Security & Safety®

Pub. No. FA-GN-1003
Ver. 1, Rev. 6/00
©2000 Ingersoll-Rand Company
PC14497