Retrofit Locks and Trim

Product Catalog

FALCON
Locks & Security Products

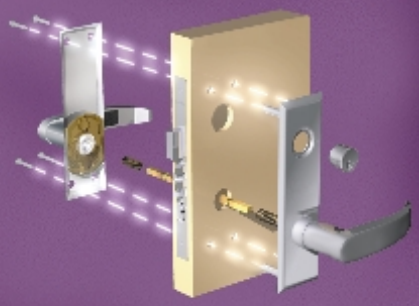

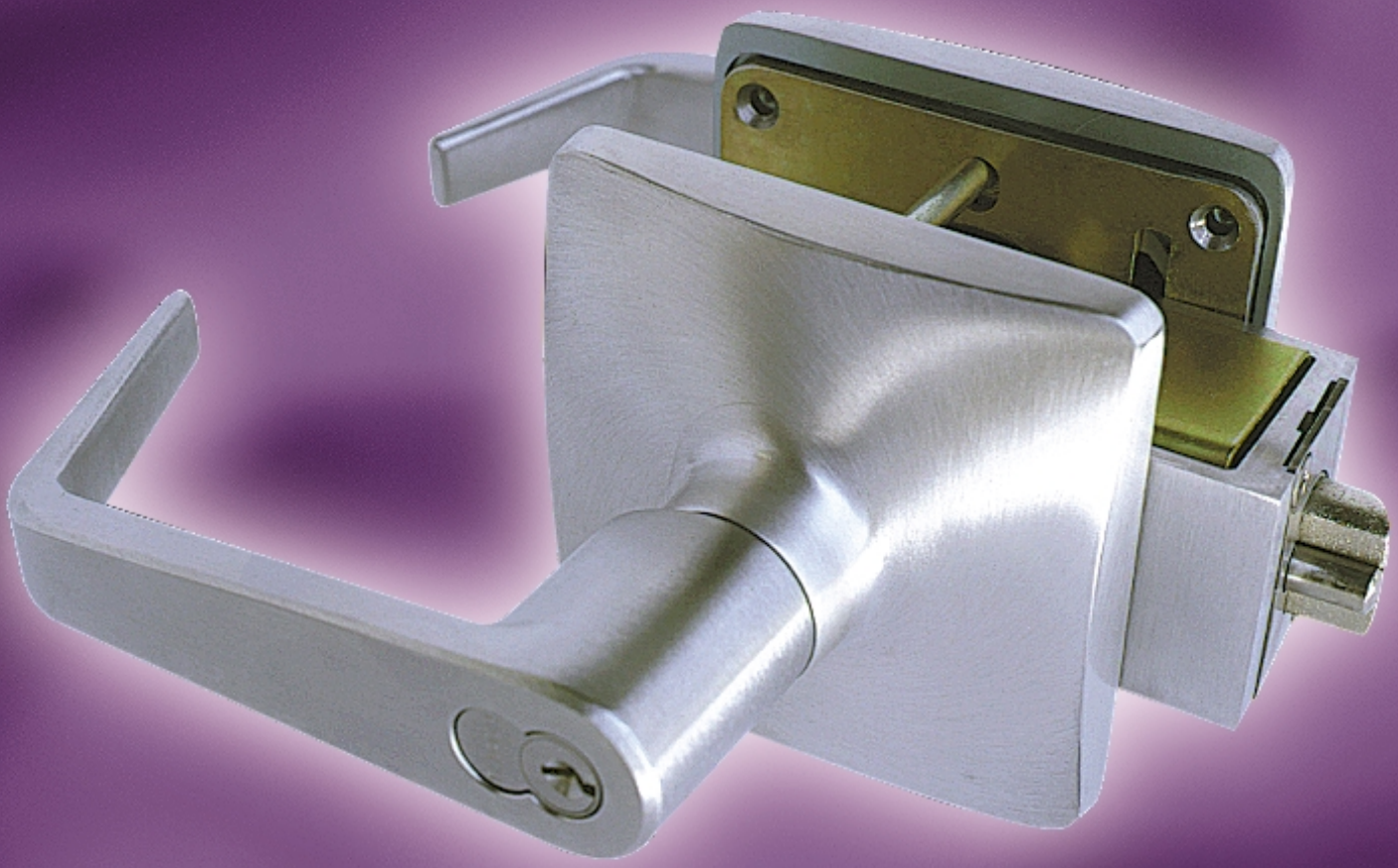

IR Security & Safety®

General Information

Falcon Lock Philosophy

"Quality locksets delivered on time" is the Falcon Lock creed. Whether you're ordering Falcon Locks for a retrofit application or specifying Falcon Lock for a major construction project, you're guaranteed personal attention through reliable, dependable service. No hassles. No hold-ups. Our top-quality locksets are delivered to specifically meet your schedule and your budget.

Falcon Lock is a member of the IR Security & Safety family, a world-wide division of Ingersoll-Rand Company.

INDEX

Credentials	**2**
ANSI/BHMA	**2**
Underwriters Laboratories	**2**
Federal Specifications	**2**
Americans With Disabilities Act	**2**
RU Series	**3**
How to Order	**3**
Finishes	**3**
Lock Features and Benefits/Specifications	**4**
Lever Design	**5**
Functions	**6**
Cylinders	**7-10**
Interchangeable Cores	**7**
Standard Cylinders	**8**
Competitor Keyways	**9-10**
Options and Accessories	**11-12**
Latches	**11**
Strikes	**12**
Dust Boxes	**12**
Retrofit Re-Lever Kits	**13-14**
How to Order	**14**
Conversion Chart	**15**

General

For over 30 years, Falcon Lock has been manufacturing reliable lock hardware. Our reputation and commitment to providing a high quality product at a reasonable price, with timely delivery, has been rewriting the standard in our industry. Falcon has one of the most extensive lines available on the market today- with a choice of functions and applications to meet and outreach the most demanding requirements.

Falcon locks feature the ultimate convenience and flexibility of an interchangeable core. Whenever a key is lost or stolen, locks can be re-keyed quickly by removing the core and installing a new one—avoiding locksmith services. Our interchangeable cores are also compatible with other small format interchangeable core products.

We continue to keep a pulse on our market by working closely with various agencies and organizations, such as ANSI/BHMA, who are responsible for the writing of specifications and standards. This allows us to improve and meet the needs of a changing market with reliable and flexible locks, delivered on time, exactly when you need them.

We are members of:

All information and specifications contained in this catalog are subject to change. Please consult our current price list or the factory for comprehensive and current product information.

Falcon Lock RU Series locksets conform to all performance and dimensional specifications of ANSI/BHMA A156.2, Grade 1. Falcon subscribes to the testing program under the jurisdiction of BHMA.

BHMA: Builders Hardware Manufacturers Association.

ANSI: American National Standards Institute, Inc.

Underwriters Laboratories, Inc. All Falcon Lock RU Series locksets are UL Listed 3 Hour A Label.

Federal Specifications: All Falcon Lock RU Series locksets meet or exceed the requirements of FF-H-00106b and FF-H-106C/GEN.

ADA: Americans with Disabilities Act of 1991. All RU Series locksets and Retrofit Re-Lever Kits comply with all handicap codes and ADA requirements. Additionally, all lever trims (except Avalon) comply with Title 19, California State Fire Marshall Code.

RU Series

How to Order

For correct ordering, and to ensure no delays in shipment of your order, the following descriptive data must be listed in the sequence shown. Necessary information can be found in other parts of this catalog. The example below shows an order for 8 each RU locksets in the 521 Office function, D (Dane) trim design, 626 finish, 1-3/4" latch height, 4-7/8" ANSI strike, less cylinder, prepared for Russwin I/C core with 2-3/4" backset latch, to accommodate doors 1-3/4" thick.

Quantity: Indicate the quantity required.

Catalog Number: Select catalog number. All catalog numbers shown in this catalog indicate 2-3/4" backset only. For thicker doors consult factory.

Trim Design: Indicate letter of lever design.
Example: A=Avalon; D=Dane; Q=Quantum.

Finish: When the finish is the same for the outside and inside trim, it is shown once (626). For split finishes, the outside is designated first, then the inside (605 x 625).

Latches: 2-3/4" backset only.

Strikes: 4-7/8" X 1-1/4 ANSI standard. Optional retrofit strikes available: 3/4", 4-3/16" and 4-5/32". See page 12 for more details.

Cylinder Type: Locks are furnished with Falcon's standard cylinder unless otherwise specified. See page 7-10 for details. When ordered "Less Cylinder" it is necessary to indicate which competitor's standard cylinder or I/C core the lockset must be prepared for. EXAMPLE: Less Cylinder - Prepared for Russwin I/C Core and whether the cylinder is 6 or 7 pin.

Door Hand: Specify hand RH/LH or RHR/LHR so latch may be assembled to outer trim properly. Field reversible.

Keying Detail: We suggest using the standard terms developed by A.H.C. (Architectural Hardware Consultants).
EXAMPLE: AA1 - Grand Master keyed, Master keyed, change key 1.

Keyways: **"G"** is standard on regular cylinders, **"A"** is standard on interchangeable cores. Other keyways available. See page 9-10.

How to order example

Qty.	Catalog Number	Trim Design	Finish	Latch Height*	Strike	Handing	Cylinder	Other Requirements
8	RU521	D	626	1-3/4"	Std	RHR	Less Cylinder	Prepare for Russwin I/C Core

Finishes

The latest in modern techniques and equipment are used to apply the highest quality finish. Extra steps assure durable, consistent finishes and long useful life.

Although we apply the finest available protective plating and/or enamel coating to the surface of our products, these finishes have limitations and in time may deteriorate either from exposure to weather, pollution, perspiration, extremes of climate, frequency of use or other factors. Deterioration of these finishes is, therefore, not a defect, but a normal process which is unavoidable. Our company cannot accept responsibility for finish deterioration in these circumstances and therefore the finishes cannot be guaranteed. These products will not be refinished or replaced under our warranty should deterioration of finishes occur.

Trim Finishes Chart

Description	ANSI No.	Available on
Bright Brass	605	All Trim
Satin Brass	606	All Trim
Satin Bronze	612	All Trim
Satin Bronze Oil Rubbed	613	All Trim
Bright Chrome	625	All Trim
Satin Chrome	626	All Trim

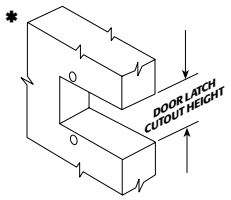

Latch heights currently identified and the manufacturer.

1. 1-3/4" Corbin, Russwin, Yale
2. 2-1/16" Corbin, Falcon
3. 2-5/8" Corbin, Sargent
4. 2-11/16" Russwin (Earliest)

Lock Features and Benefits
Lock Specifications

RU Series

FALCON Locks & Security Products

Retrofit Locks Features and Benefits

The RU Series from Falcon is designed to retrofit existing unit locks manufactured by Falcon (Weiser), Corbin Russwin and Yale. It exceeds ANSI Grade 1 specifications and is UL/ULC listed. Incorporates Falcon's vandal resistant PressureRelease™ trim to prevent damage to internal mechanism. Installs with minimal rework to existing doors while preserving door and frame for cost effective project planning. Falcon's RU Series satisfies all ADA easy access requirements.

Features Include:

- Vandal resistant PressureRelease™ outside lever disengages when locked to prevent damage to internal mechanism.
- 3 lever designs.
- Complements Falcon's "Family" of lever designs.
- Power Spring™ in rose trim prevents lever sag.
- 12 commercial lock functions.
- 6 standard finishes: 605, 606, 612, 613, 625, 626.
- No exposed mounting screws.
- Solid bar stock deadlocking feature prevents latch binding and lock failure due to poor door alignment.
- Exceeds 800,000 cycle ANSI Grade 1 requirement.
- Meets or exceeds all other ANSI A156.2 rigorous Grade 1 specifications for key-in-lever products.

Benefits Include:

- Preserves existing facility doors and frames.
- Preserves original architectural design without adapter plate or add-ons.
- Easy installation with minimal door modifications.
- Features a 4" square rose which covers existing mounting holes, most paint lines and required door rework.
- Complies with ADA easy access requirements.
- UL/ULC listed for 3 Hour A Label doors.
- Strikes available to match existing frame preparation.
- Reuse existing facility cylinders and key system.
- Non-handed chassis and field reversible trim and latch bolt for easy stocking and lower inventory cost.
- Key removable outside lever for easy cylinder replacement.
- Outside lever secured by a spring-loaded retainer. Retainer cannot be depressed when locks have been locked. Inside lever secured by a set screw. Levers have heavy-duty steel individual return springs in order to prevent lever sag.

Falcon Lock RU Series Specifications

Retrofit locksets shall be Falcon Lock RU Series or equal and meet the following requirements:

- Exceeds ANSI A156.2 Grade1 Key-in-Lever specifications.
- Available with Falcon standard or interchangeable core cylinders in 6 and 7 pin configuration.
- Interchangeable core levers are non-removable with core installed.
- Available with some 6 pin competitor's keyways.
- Accepts these competitors interchangeable (removable) cores and standard 6 pin cylinders: Arrow, Assa, Best interchangeable core, Corbin Russwin (except Master-Ring), Medeco, Sargent, Schlage and Yale.
- PressureRelease™ (clutchable) outside lever.
- Heavy duty, solid levers are 5" long and have no inserts.
- No exposed mounting screws.
- Installs with 10-32 through-bolt screws with thread sealant for extra security and resistance to vibrating loose.
- Standard lock is for 1-3/4" thick doors. Also available for 2" and 2-1/4" thick doors.
- 2-3/4" backset only.
- ANSI strike standard.
- Optional OEM strikes available.

Questions? Call: 800-266-4456 / FAX: 800-777-8229 / or e-mail info@falconlock.com
Falcon Lock Company 2650 Orbiter Street Brea, CA 92821-6265 / Visit us on the Internet at www.falconlock.com

IR Security & Safety

RU Series

Levers

Levers are solid pressure cast zinc, finished to match mating parts. Roses are wrought brass or bronze, and are installed over pressure cast through-bolted rose inserts. Levers are secured by a spring-loaded retainer. Retainer cannot be depressed when locks have been locked.

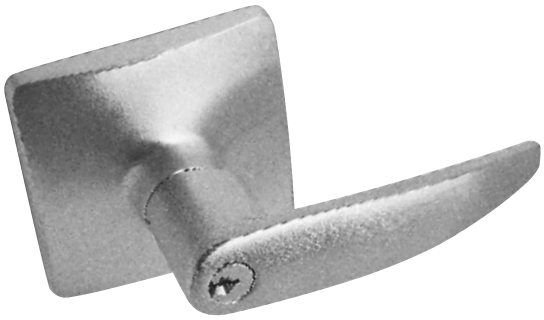

A
Avalon

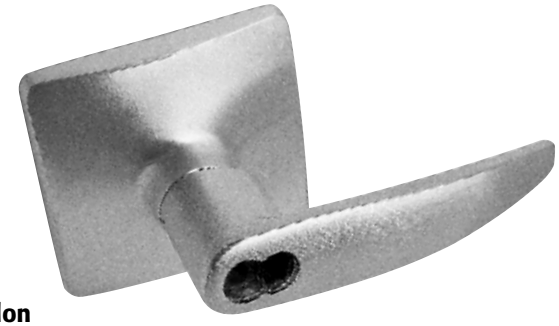

A
Avalon

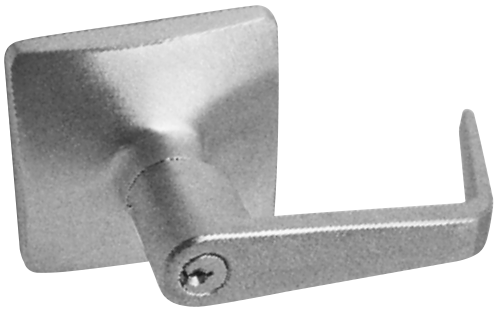

D
Dane

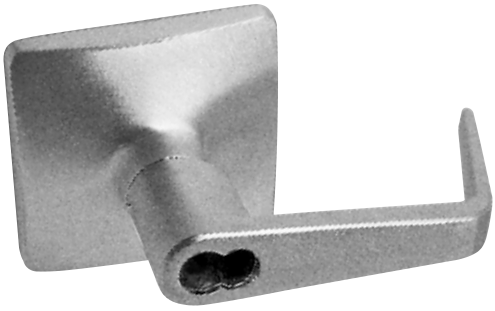

D
Dane

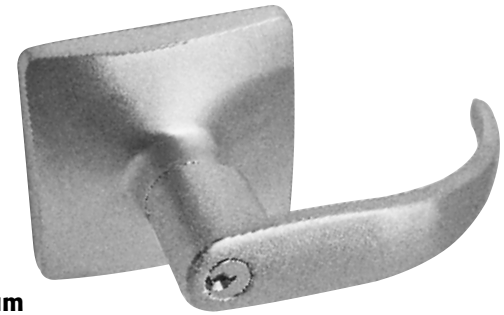

Q
Quantum

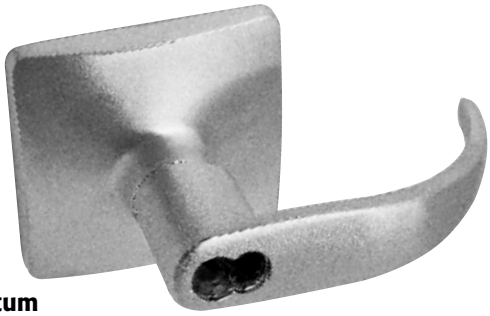

Q
Quantum

RU Series

To order Falcon Lock RU Series locksets, please consult page 3 for ordering information and assistance.

Indicates interchangeable core available.

Catalog Number	Function	Description
RU101		**Passage/Closet Latchset** Latch bolt by levers at all times.
RU301		**Privacy Lock** Latch bolt by levers. Outside lever locked by push button in inside lever. Rotating inside lever or closing door releases push button. Emergency release in outside lever unlocks door.
RU381		**Entry/Restroom Lock** Deadlocking latch bolt by levers except when outside lever is locked by key inside, then by key outside. Inside lever is always locked.
RU411		**Asylum Lock** Deadlocking latch bolt by key from either side at all times. Both levers inoperable.
RU501		**Entry Lock** Push button locking. Button on inside locks outside lever until unlocked by key or by rotating inside lever. Inside lever always free. Deadlocking latch bolt.
RU511		**Entry/Office Lock** Turn/push button locking. Pushing and turning button locks outside lever requiring use of key until button is manually unlocked. Push button locking. Pushing button locks outside lever until unlocked by key or by rotating inside lever. Inside lever always free. Deadlocking latch bolt.
RU521		**Office Lock** Turn button locking. Turning button locks outside lever requiring use of key until button is manually unlocked. Inside lever always free. Deadlocking latch bolt.
RU561		**Classroom Lock** Deadlocking latch bolt by levers. Outside lever is locked by key in outside lever. Inside lever is always free.
RU571		**Dormitory Lock** Deadlocking latch bolt by levers except when locked by push button in inside lever. Key in outside lever locks or unlocks lever and releases button. Closing door releases push button. Inside lever always free.
RU581		**Storeroom Lock** Deadlocking latch bolt by lever inside or key outside. Outside lever is inoperable. Inside lever always free.
RU851		**Storeroom (Electrified-Fail Safe)** Latch bolt operated by lever from either side except when outer lever is electrically locked. When outer lever is locked (inoperable), latch bolt retracted by key in cylinder outside dead locking latch bolt. 24V/DC .185AMPS.
RU881		**Storeroom (Electrified-Fail Secure)** Deadlocking latch bolt operated by lever inside at all times. Outside lever inoperable until electrically unlocked, then latch bolt from either side. When outside lever is inoperable, latch bolt retracted by key in cylinder outside.

Questions? Call: 800-266-4456 / FAX: 800-777-8229 / or e-mail info@falconlock.com
Falcon Lock Company 2650 Orbiter Street Brea, CA 92821-6265 / Visit us on the Internet at www.falconlock.com

IR Security & Safety

RU Series

The Falcon Lock RU Series accepts the following competitors' standard Interchangeable cores:

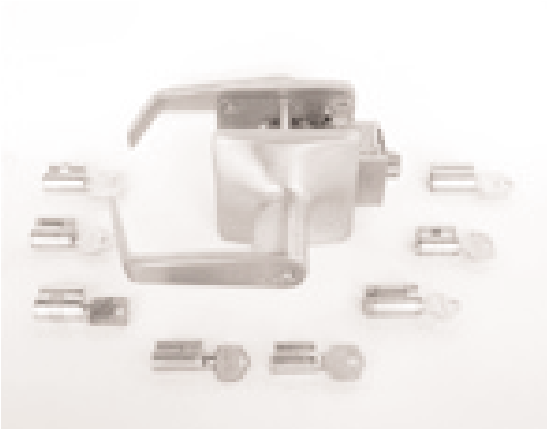

Interchangeable Cores*

- Falcon
- Arrow
- Assa
- Best
- Corbin Russwin
- Sargent
- Peaks (Kaba)
- Primus (Schlage)
- Medeco — 32 Series
- Schlage
- Yale

*Locks must be modified for some cylinders. Be sure to specify manufacturer when ordering.

Falcon Interchangeable Cores

Catalog Number	Description
C606	For use in all RU Series I/C Keyed Locks – 6 pin (cover style)
C607	For use in all RU Series I/C Keyed Locks – 7 pin (cover style)
CB806	For use in all RU Series I/C Keyed Locks – 6 pin (cap style)
CB807	For use in all RU Series I/C Keyed Locks – 7 pin (cap style)

Note: Specify finish: 606 or 626.
Specify keyway: "A" (standard) or other keyway.

RU Series

The Falcon Lock RU Series accepts the following competitors' standard 6 pin cylinders:

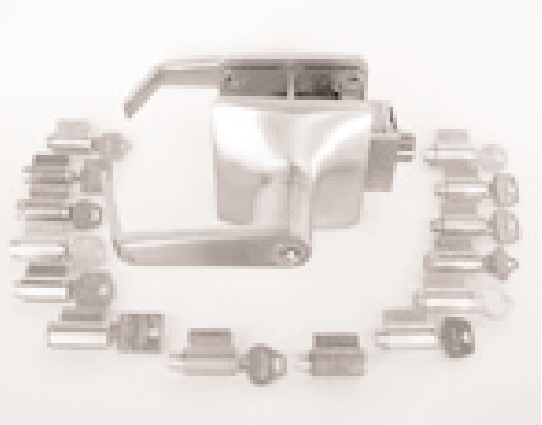

Standard 6 Pin Cylinders*

- Falcon
- Corbin Russwin
- Medeco
- Sargent
- Yale — Monolock
- Arrow
- Peaks
- Schlage
- Corbin Russwin — Unit Lock
- Assa
- Lori
- Primus (Schlage)
- Yale

*Locks must be modified for some cylinders. Be sure to specify manufacturer when ordering.

Falcon Standard Cylinders

Catalog Number	Description	Function
A23151-05	5 Pin Assembly	All except 381 Inside Cylinder, 571
A23151-06	5 Pin Assembly	All except 381 Inside Cylinder, 571
A23151-07	5 Pin Assembly	All except 381 Inside Cylinder, 571
A23161-05	6 Pin Assembly	All except 381 Inside Cylinder
A23161-06	6 Pin Assembly	All except 381 Inside Cylinder
A23161-07	6 Pin Assembly	All except 381 Inside Cylinder
A23171-05	7 Pin Assembly	571
A23171-06	7 Pin Assembly	571
A23171-07	7 Pin Assembly	571

Note: Specify finish: 606 or 626.
Specify keyway: "E", "G"(standard), "H", "K", "L", "N", "P".

Questions? Call: 800-266-4456 / FAX: 800-777-8229 / or e-mail info@falconlock.com
Falcon Lock Company 2650 Orbiter Street Brea, CA 92821-6265 / Visit us on the Internet at www.falconlock.com

FALCON Locks & Security Products

RU Series

Standard Cylinders with Competitor Keyways—6 pin

Catalog Number	Description	Function
A23170-000	Arrow 'O' Bitted	All except 381 IS, 571
A23170-0KA	Arrow 'KA' Keyed Alike 4	All except 381 IS, 571
A23170-0KD	Arrow 'KD' Keyed Different	All except 381 IS, 571
A23167-000	Corbin 60 'O' Bitted	All except 381 IS, 571
A23167-0KD	Corbin 60 'KD' Keyed Different	All except 381 IS, 571
A23174-000	Corbin Russwin L4 'O' Bitted	All except 381 IS, 571
A23168-000	Russwin D1 'O' Bitted	All except 381 IS, 571
A23168-0KD	Russwin D1 'KD' Keyed Different	All except 381 IS, 571
A23166-000	Sargent LA 'O' Bitted	All except 381 IS, 571
A23166-0KD	Sargent LA 'KD' Keyed Different	All except 381 IS, 571
A23160-000	Schlage C 'O' Bitted	All except 381 IS, 571
A23160-0KA	Schlage C 'KA' Keyed Alike 4	All except 381 IS, 571
A23160-0KD	Schlage C 'KD' Keyed Different	All except 381 IS, 571
A23159-000	Schlage E 'O' Bitted	All except 381 IS, 571
A23169-000	Yale 8 (Para) 'O' Bitted	All except 381 IS, 571
A23169-0KD	Yale 8 (Para) 'KD' Keyed Different	All except 381 IS, 571
A23158-000	Yale GA 'O' Bitted	All except 381 IS, 571
A23170-011	Arrow 'O' Bitted	381 Inside Cylinder
A23170-11A	Arrow 'KA' Keyed Alike 4	381 Inside Cylinder
A23170-11D	Arrow 'KD' Keyed Different	381 Inside Cylinder
A23167-011	Corbin 60 'O' Bitted	381 Inside Cylinder
A23167-11D	Corbin 60 'KD' Keyed Different	381 Inside Cylinder
A23174-011	Corbin Russwin L4 'O' Bitted	381 Inside Cylinder
A23168-011	Russwin D1 'O' Bitted	381 Inside Cylinder
A23168-11D	Russwin D1 'KD' Keyed Different	381 Inside Cylinder
A23166-011	Sargent LA 'O' Bitted	381 Inside Cylinder
A23166-11D	Sargent LA 'KD' Keyed Different	381 Inside Cylinder
A23160-011	Schlage C 'O' Bitted	381 Inside Cylinder
A23160-11A	Schlage C 'KA' Keyed Alike 4	381 Inside Cylinder
A23160-11D	Schlage C 'KD' Keyed Different	381 Inside Cylinder
A23159-011	Schlage E 'O' Bitted	381 Inside Cylinder
A23169-011	Yale 8 (Para) 'O' Bitted	381 Inside Cylinder
A23169-11D	Yale 8 (Para) 'KD' Keyed Different	381 Inside Cylinder
A23158-011	Yale GA 'O' Bitted	381 Inside Cylinder

Note: Specify finish 606 or 626.

IS=Inside Cylinder

RU Series

FALCON
Locks & Security Products

Standard Cylinders with Competitor Keyways–6 pin

Catalog Number	Description	Function
A23170-012	Arrow 'O' Bitted	571
A23170-12A	Arrow 'KA' Keyed Alike 4	571
A23170-12D	Arrow 'KD' Keyed Different	571
A23167-012	Corbin 60 'O' Bitted	571
A23167-12D	Corbin 60 'KD' Keyed Different	571
A23174-012	Corbin Russwin L4 'O' Bitted	571
A23168-012	Russwin D1 'O' Bitted	571
A23168-12D	Russwin D1 'KD' Keyed Different	571
A23166-012	Sargent LA 'O' Bitted	571
A23166-12D	Sargent LA 'KD' Keyed Different	571
A23160-012	Schlage C 'O' Bitted	571
A23160-12A	Schlage C 'KA' Keyed Alike 4	571
A23160-12D	Schlage C 'KD' Keyed Different	571
A23159-012	Schlage E 'O' Bitted	571
A23169-012	Yale 8 (Para) 'O' Bitted	571
A23169-12D	Yale 8 (Para) 'KD' Keyed Different	571
A23158-012	Yale GA 'O' Bitted	571

Note: Specify finish 606 or 626.

Questions? Call: 800-266-4456 / FAX: 800-777-8229 / or e-mail info@falconlock.com
Falcon Lock Company 2650 Orbiter Street Brea, CA 92821-6265 / Visit us on the Internet at www.falconlock.com

IR Security & Safety

RU Series

FALCON Locks & Security Products

Latches—1/2" Projection, Standard, UL Listed

3 Hour

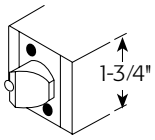

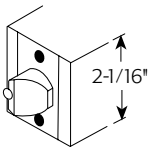

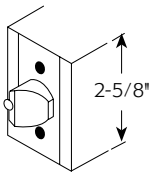

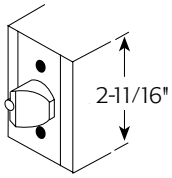

Latches for RU Series locks are 2-3/4" backset for 1-3/4" thick door.

Specify finish: 605, 606, 612, 613, 625, 626.

Catalog Number	Description	Latch Height
A31469-001	2-3/4" Backset Spring	1-3/4"
A31469-002	2-3/4" Backset Spring	2-1/16"
A31469-003	2-3/4" Backset Spring	2-5/8"
A31469-004	2-3/4" Backset Spring	2-11/16"
A31469-01D	2-3/4" Backset Deadlocking	1-3/4"
A31469-02D	2-3/4" Backset Deadlocking	2-1/16"
A31469-03D	2-3/4" Backset Deadlocking	2-5/8"
A31469-04D	2-3/4" Backset Deadlocking	2-11/16"

Latches—3/4" Projection, Optional, UL Listed

3 Hour

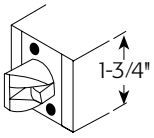

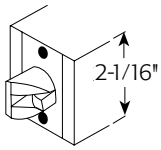

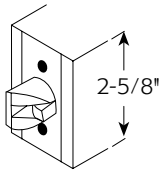

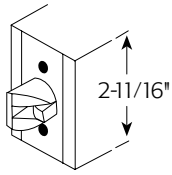

Latches for RU Series locks are 2-3/4" backset, 1-3/4" thick door.

Specify finish: 605, 606, 612, 613, 625, 626.

Catalog Number	Description	Latch Height
A31549-01D	2-3/4" Backset Deadlocking	1-3/4"
A31549-02D	2-3/4" Backset Deadlocking	2-1/16"
A31549-03D	2-3/4" Backset Deadlocking	2-5/8"
A31549-04D	2-3/4" Backset Deadlocking	2-11/16"

RU Series

Strikes

Furnished with a 4-7/8" ANSI Strike unless otherwise specified.

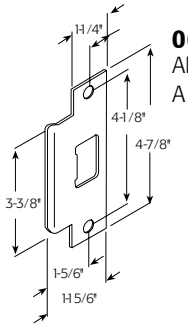

005164-000*
ANSI Prep
A115.2

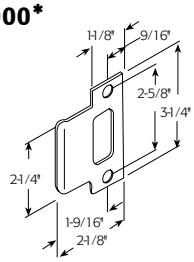

031471-000*
Early Corbin
Russwin Single
Door
Note: Strike, Door and Lock Same Center Line

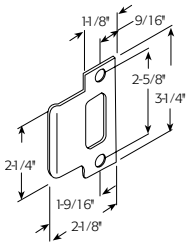

031471-001*
Early Corbin
Russwin Single
Door
Note: Strike Center Line is not the Same as Door and Lock

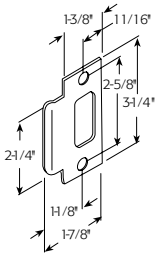

031472-000*
Early Corbin
Russwin Pair
of Doors

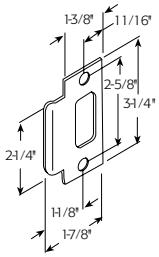

031473-000*
Yale Mono
Pair of Doors

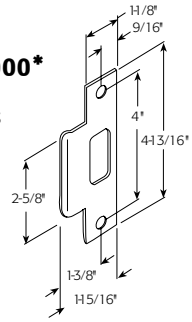

031474-000*
Early Corbin

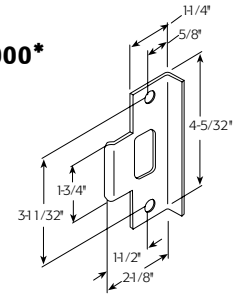

031477-000*
Early Russwin
Unit Lock

* Specify finish: 605, 606, 612 or 625, 626 or 630

Dust Boxes

005099-000-30
1" deep. May be used with any 4-7/8" high (ANSI) strike.

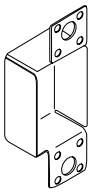

031453-000-30
3/4" deep. May be used with any 3-1/4" high strike.

Questions? Call: 800-266-4456 / FAX: 800-777-8229 / or e-mail info@falconlock.com
Falcon Lock Company 2650 Orbiter Street Brea, CA 92821-6265 / Visit us on the Internet at www.falconlock.com

Retrofit Re-Lever Kits

Retrofit Re-Lever Kits

Falcon Lock's mortise lock "Re-Lever Kits" are a quick, cost-effective solution to meeting ADA requirements. The Retrofit Re-Lever Kit allows installation of our top quality levers without removing the locking unit. Retrofits most manufacturer's mortise knob locks—even old fashioned cast versions—with a high quality Falcon lever in ten minutes or less.

Three easy steps:

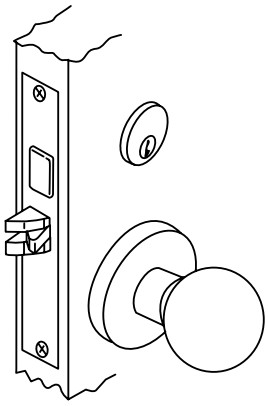

Step 1
Remove knob trim and cylinder.

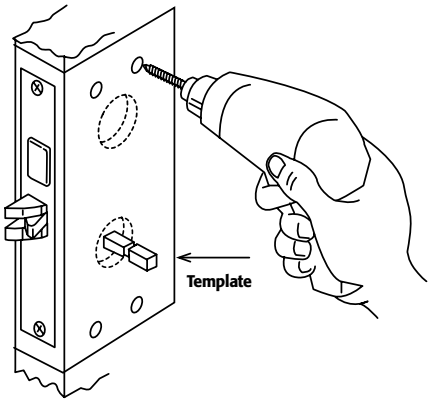

Step 2
Insert spindle from kit into hub. Place enclosed template over spindle and drill (4) holes.

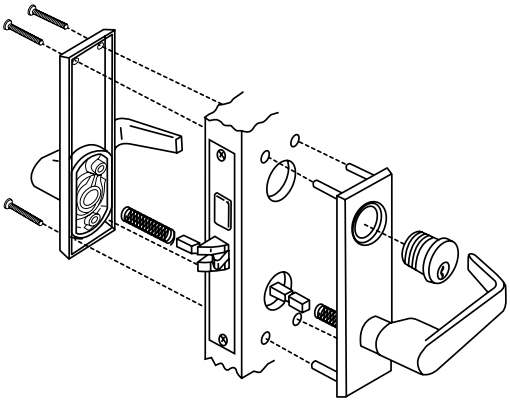

Step 3
Insert spindles in hubs and springs in both levers. Position outer trim on door, then through-bolt inner trim. Reinstall cylinder, if necessary.

There are three offerings:

1. **RW Series**—Consists of a wrought, Napa style escutcheon with four mounting posts and die cast levers. Because the levers are die cast, the trim may be used on UL listed openings. Levers available: Avalon, Dane or Quantum.
2. **RZ Series** (not illustrated)—Consists of a cast or forged escutcheon with a die cast lever. Can be used on UL listed openings. Levers available: Avalon, Dane or Quantum.
3. **RC Series** (not illustrated)—Consists of a cast or forged escutcheon and our regular levers. Levers available: Avalon, Capri, Dane, Java, Kim, Quantum or Sutro. (Same escutcheon as RZ Series and with Falcon's heavy duty M Series levers.) CANNOT BE UL LISTED.

Retrofit Re-Lever Kits

FALCON Locks & Security Products

How to Order

For correct ordering, and to ensure no delays in shipment of your order, the following descriptive data must be listed in the sequence shown. Necessary information can be found in other parts of this catalog. The example below shows an order for 12 each RW leversets for use in the passage function, D (Dane) trim design, 626 finish, right hand door.

Quantity: Indicate the quantity required.

Catalog Number: Select catalog number from below.

Trim Design: Indicate letter of lever design.
Example: A=Avalon; D=Dane; Q=Quantum.

Finish: Specify ANSI finish number from below.

Function: Specify current lock function for Retrofit.

Door Hand: Specify right hand or left hand.

How to order example

Qty.	Catalog Number	Trim Design	Finish	Function	Handing	Other Requirements
12	RW340	D	626	For use on Passage Function	RH	Prepare for Russwin

Catalog Numbers

Lock Functions	Falcon	Arrow	Baldwin	Best	Corbin/ Russwin	Lockwood	Sargent	Schlage	Yale	Marks
A. Passage	040	140	110	240	340	440	540	640	740	840
B. Privacy	041	141	111	241	341	441	541	641	741	841
C. Office/Classroom/Storeroom	042	142	112	242	342	442	542	642	742	842
D. Entry/Dormitory	043	143	113	243	343	443	543	643	743	843
E. Store Door/Public Restroom/Asylum	044	144	114	244	344	444	544	644	744	844

A. Passage: No cylinder holes—outside or inside
B. Privacy: Emergency hole outside —T-turn inside
C. Office/Classroom/Storeroom: Cylinder hole outside—blank inside
D. Entry/Dormitory: Cylinder hole outside—T-turn inside
E. Store Door/Public Restroom/Asylum: Cylinder hole outside and inside

Note: Basic numbers for current products are listed. Consult factory for ordering numbers for older products or non-standard products.

Trim Finishes Chart

Description	ANSI No.	Available on
Bright Brass	605	All Trim
Satin Brass	606	*
Satin Bronze	612	*
Satin Bronze Oil Rubbed	613	*
Bright Chrome	625	*
Satin Chrome	626	All Trim

* Consult current price book for finish availability by design.

Ordering Information

1. Need sample lock chassis with spindle(s).
2. Specify center-to-center dimension of hub to cylinder.
3. Specify center-to-center dimension of hub to T-turn.
4. Specify exact spindle size (both inner & outer).

Questions? Call: 800-266-4456 / FAX: 800-777-8229 / or e-mail info@falconlock.com
Falcon Lock Company 2650 Orbiter Street Brea, CA 92821-6265 / Visit us on the Internet at www.falconlock.com

RU Series

FALCON Locks & Security Products

RU Series Grade 1 Retrofit Unit Key-In-Lever

ANSI Number/Grade	Function	Falcon	Corbin/ Russwin	Old Corbin Unit Lock	Old Russwin Unit Lock	Old Yale Mono-Lock	Yale Mono-Lock Retrofit	Old Falcon R Series
F75-1	Passage	RU101	UT5210	310	510	6201	6401	R101
F76-1	Privacy	RU301	UT5220	320	520	6202	6402	R301
F88-1	Vestibule	RU381	UT5272	354	546 1/2	6217	6417	R381
F87-1	Asylum	RU411	—	—	—	6230	—	R411
F82-1	Entry	RU501	UT5261	361	546	6204	6404	R501
F109-1	Entry/Office	RU511	—	—	—	6207	6407	—
F81-1	Entry/Office	RU521	UT5251	351	540	—	—	R521
F84-1	Classroom	RU561	UT5255	355	540 5/8	6208	6408	R561
F90-1	Dormitory	RU571	—	—	—	6222	6422	R571
F86-1	Storeroom	RU581	UT5257	357	552	6205	6405	R581
—	Storeroom		—	—	—	—	—	—
	(Electrified Fail-Safe)	RU851	—	—	—	—	—	—
	(Electrified Fail-Secure)	RU881	—	—	—	—	—	—

Trim Styles	Falcon	Corbin/ Russwin	Old Corbin Unit Lock	Old Russwin Unit Lock	Old Yale Mono-Lock	Yale Mono-Lock Retrofit	Old Falcon R Series
	Avalon	—	912L	Beaulev	Jefferson	MO	—
	Dane	Essex	912LR	Moderalev	Saxon	AU	—
	Quantum	—	—	—	—	PB	—

All effort has been made to make this information comprehensive. Since no two products are exactly alike, this data represents those products which are similar. This information was obtained from trade services and is not guaranteed nor meant to represent any product as equal to any other product.