Grade 2 Tubular Lock Product Catalog

F Series

FALCON
Locks & Security Products

IR Security & Safety®

FALCON
Locks & Security Products

F Series

Falcon Lock Philosophy

"Quality locksets delivered on time" is the Falcon Lock creed. Whether you're ordering Falcon Locks for a retrofit application or specifying Falcon Lock for a major construction project, you're guaranteed personal attention through reliable, dependable service. No hassles. No hold-ups. Our top-quality locksets are delivered to specifically meet your schedule, and your budget.

Falcon Lock is a member of IR Security & Safety family, a world-wide division of Ingersoll-Rand Company.

INDEX

Credentials	**2**
ANSI/BHMA	**2**
Underwriters Laboratories	**2**
Federal Specifications	**2**
Americans with Disabilities Act	**2**
General Information	**3**
How to Order	**3**
Finishes	**3**
Lock Features and Specifications	**4**
Trim Designs	**5-6**
Levers	**5**
Knobs	**6**
Functions	**7**
Cylinders	**8**
Interchangeable Cores	**8**
Standard Cylinders	**8**
Competitor Keyways	**8**
Strikes	**8**
Options and Accessories	**9**
Latches	**9**
Dust Box	**9**
Construction Keying	**10**
Conversion Chart	**11**

General

For over 30 years, Falcon Lock has been manufacturing reliable lock hardware. Our reputation and commitment to providing a high quality product at a reasonable price, with timely delivery, has been rewriting the standard in our industry. Falcon has one of the most extensive lines available on the market today- with a choice of functions and applications to meet and outreach the most demanding requirements.

Falcon locks feature the ultimate convenience and flexibility of an interchangeable core. Whenever a key is lost or stolen, locks can be re-keyed quickly by removing the core and installing a new one — avoiding locksmith services. Our interchangeable cores are also compatible with other small format interchangeable core products.

We continue to keep a pulse on our market by working closely with various agencies and organizations, such as ANSI/BHMA, who are responsible for the writing of specifications and standards. This allows us to improve and meet the needs of a changing market with reliable and flexible locks, delivered on time, exactly when you need them.

We are members of:

All information and specifications contained in this catalog are subject to change. Please consult our current price list or the factory for comprehensive and current product information.

Falcon F Series locksets conform to all performance and dimensional specifications of ANSI/BHMA A156.2, Series 4000, Grade 2. Falcon subscribes to the testing program under the jurisdiction of BHMA.

BHMA: Builders Hardware Manufacturers Association.

ANSI: American National Standards Institute, Inc.

Underwriters Laboratories, Inc. All Falcon F Series locksets are available UL Listed for use on 1-1/2 hour B label fire doors.

Federal Specifications: All Falcon F Series locksets meet or exceed the requirements of FF-H-00106b and FF-H-106C/GEN.

ADA: Americans with Disabilities Act of 1991. All F Series locksets with lever style trim comply with all handicap codes and ADA requirements. Additionally, all lever trims (except Avalon) comply with Title 19, California State Fire Marshall Code.

Questions? Call: 800-266-4456 / FAX: 800-777-8229 / or e-mail info@falconlock.com
Falcon Lock Company 2650 Orbiter Street Brea, CA 92821-6265 / Visit us on the Internet at www.falconlock.com

F Series

FALCON Locks & Security Products

How to Order

For correct ordering, and to ensure no delays in shipment of your order, the following descriptive data must be listed in the sequence shown. Necessary information can be found in other parts of this catalog. The example below shows an order for 12 each F locksets in the 521 Entry function, D (Dane) trim design in a 626 (satin chrome) finish, to accommodate doors 1-3/4" thick with AA1-AA12 keying.

Quantity: Indicate the quantity required.

Catalog Number: Select catalog number.

Trim Design: Indicate letter of knob or lever design.
EXAMPLE: D for Dane lever style.

Finish: When the finish is the same for the outside and inside trim, it is shown once (626). For split finishes, the outside is designated first, then the inside (605 x 625).

Latches: 2-3/4" backset standard. 2-3/8", 3-3/4" and 5" backset available. Non UL standard. Specify if UL listed is desired.

Strikes: 2-3/4 x 1-1/8 standard. Optional ANSI or full lip strikes available. See page 8.

Cylinder Type: For 6 pin, add 6 pin.

Keying Detail: We suggest using the standard terms developed by A.H.C. (Architectural Hardware Consultants).
EXAMPLE: AA1–Grand Master keyed, Master keyed, change key 1.

Interchangeable Core: To order product capable of accepting an interchangeable core, add **"FIC"** (for interchangeable core). To order product with an interchangeable core, add **"WIC"** (with interchangeable core).

Keyways: "G" is standard on regular cylinders, **"A"** is standard on interchangeable cores. Other keyways available. See page 8 or current price book.

Additional Keys: Note the total number of keys required.

Large Bow Keys: Add–"with large bow keys."

How to order example

Qty.	Catalog Number	Trim Design	Finish	Latch	Strike	Cylinder	Detail
12	F521	D	626	STD	STD	6pin	AA1-AA12 1-3/4" Door

Finishes

The latest in modern techniques and equipment are used to apply the highest quality finish. Extra steps assure durable, consistent finishes and long useful life.

Although we apply the finest available protective plating and/or enamel coating to the surface of our products, these finishes have limitations and in time may deteriorate either from exposure to weather, pollution, perspiration, extremes of climate, frequency of use or other factors. Deterioration of these finishes is, therefore, not a defect, but a normal process which is unavoidable. Our company cannot accept responsibility for finish deterioration in these circumstances and therefore the finishes cannot be guaranteed. These products will not be refinished or replaced under our warranty should deterioration of finishes occur.

Trim Finishes Chart

Description	ANSI No.	Available on
Bright Brass	605	All Trim
Satin Brass	606	*
Satin Bronze	612	*
Satin Bronze Oil Rubbed	613	*
Bright Chrome	625	*
Satin Chrome	626	All Trim

* Consult current price book for finish availability by design.

Lock Features and Specifications

F Series

FALCON Locks & Security Products

Lock Features

Door Thickness: Interior locksets accommodate thicknesses of 1-3/8" to 1-3/4". Exterior locks accommodate 1-3/8" to 1-7/8" thick doors.

Backsets: 2-3/4" standard. 2-3/8" and 5" (UL only) also available.

Mechanism: Cold rolled steel, zinc plated and chromate coated for rust resistance.

Attachment: Outside knob/lever, rose and chassis one single assembly. Inner mechanism secured to outer mechanism with two through-bolt screws through a steel mounting plate. Snap-on inner rose conceals screw heads. Knob/lever mounts over knob/lever retainer.

Handing: Non-handed. May be used in right hand or left hand doors swinging in or out.

Cylinders: Furnished with solid brass plug and housing,drilled with 6 pin chambers, pinned in 5 unless otherwise specified. Elite, Troy knobs and all lever handles available with 6 or 7 pin interchangeable cores. Furnished with two nickel silver keys standard.

Keyways: "G" keyway standard on standard cylinders. "A" keyway standard on I/C core cylinders. Also available with some optional keyways. See page 8.

Trim: Available with Elite, Hana and Troy (I/C only) knob styles and Avalon, Dane and Quantum lever handle styles. See individual designs shown on pages 5 and 6 for details.

Latches: 1/2" bolt projection. Non-UL standard. Optional UL listed available. Furnished standard with 2-3/4" backset. 2-3/4" and 5" backset have a 1-1/8" x 2-1/4" faceplate. Optional 2-3/8" backset has a 1" x 2-1/4" faceplate. Consult Options and Accessories section for other optional faceplates.

Strikes: 2-3/4" x 1-1/8" T-strike standard. ANSI 4-7/8" x 1-1/4" or 2-1/4" full lip strikes available. Consult Options and Accessories section.

Screws: Furnished with combination wood/machine screws for use on wood or metal doors or frames.

ANSI/BHMA: Meets ANSI/BHMA A156.2, Series 4000, Grade 2.

UL: 1-1/2 hour B label doors when used with UL latches.

Falcon Lock F Series Specifications

Tubular lockset shall be Falcon Lock F Series or equal and meet the following requirements:

- F Series locksets and latchsets shall meet Grade 2 requirements of ANSI/BHMA A156.2, Series 4000.
- Locksets and latchsets, where required on fire rated openings, shall be UL listed for 1-1/2 hour B Label doors.
- Levers shall comply with all state handicap codes and meet ADA requirements.
- Levers shall have a minimum length of 4-3/8" from center of opening to end.
- Outer trim of lock shall be one piece, factory preassembled. Inner trim attaches by two through-bolt screws through a steel mounting plate on inner spindle assembly.
- There shall be no exposed screws on trim.
- Backset shall be 2-3/4" (or 5").
- Cylinders shall have a minimum of 6 active pin chambers and shall be furnished with 2 nickel silver keys.
- Locks provided with levers shall have individual return springs in both trims for positive return and no lever sag.
- The lock spindle shall pass through the latch hub to create a one piece unit for strength and security.
- Locksets and latchsets shall be provided with screws for mounting in both wood and metal doors and frames.

Acceptable manufacturer: **FALCON LOCK COMPANY**

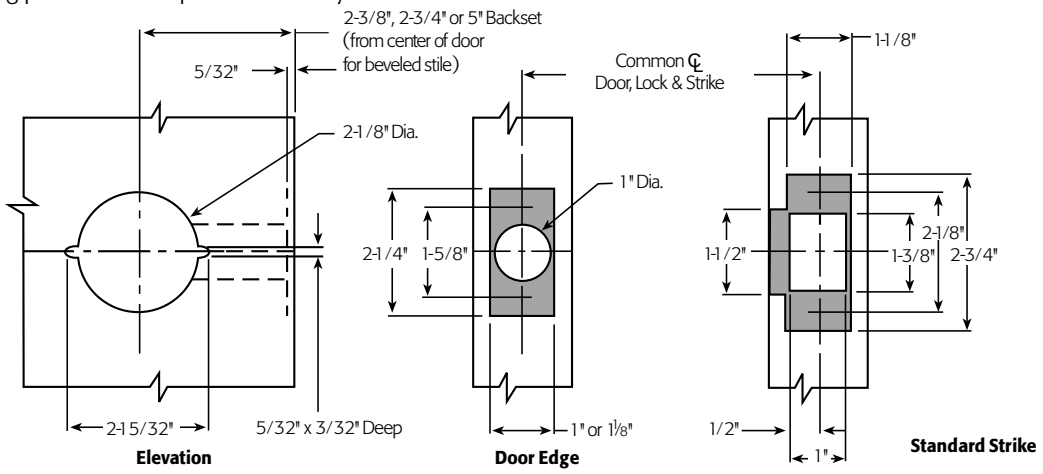

Questions? Call: 800-266-4456 / FAX: 800-777-8229 / or e-mail info@falconlock.com
Falcon Lock Company 2650 Orbiter Street Brea, CA 92821-6265 / Visit us on the Internet at www.falconlock.com

IR Security & Safety

F Series

FALCON
Locks & Security Products

Levers

Levers are pressure cast zinc, finished to match mating parts. Roses are wrought brass or bronze installed over steel reinforcing plates. Levers are secured by a spring-loaded retainer. Retainer cannot be depressed when locks have been locked.

A
Avalon

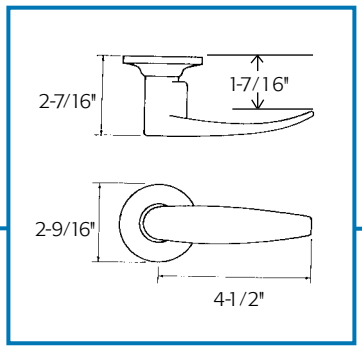

D
Dane

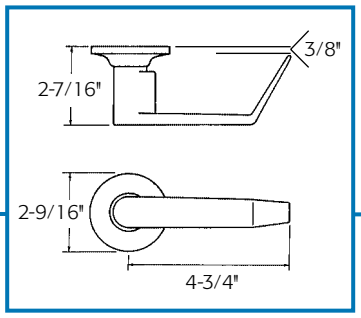

Q
Quantum

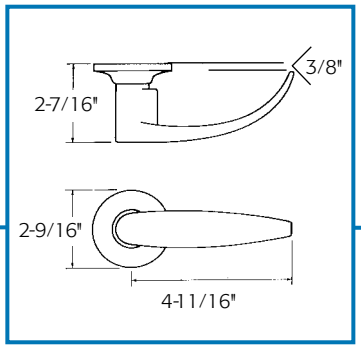

Abrasive Coated Levers

All knobs and levers are available with abrasive coating along the length of the lever to identify entrances to hazardous areas for the handicapped. To order add: "with abrasive coated outer lever"in detail section of order.

F Series

Knobs

Knobs and roses are wrought brass or bronze installed over steel reinforcing plates. Knobs are secured by a spring-loaded retainer. Retainer cannot be depressed when locks have been locked.

E
Elite

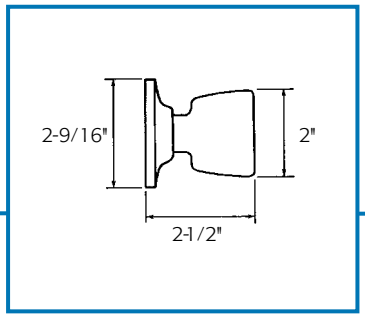

H
Hana

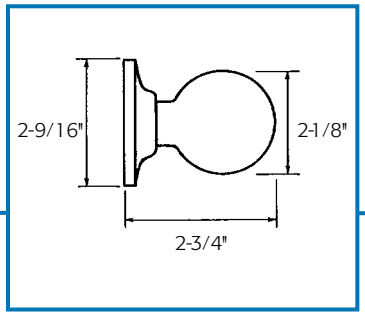

T
Troy

Questions? Call: 800-266-4456 / FAX: 800-777-8229 / or e-mail info@falconlock.com
Falcon Lock Company 2650 Orbiter Street Brea, CA 92821-6265 / Visit us on the Internet at www.falconlock.com

F Series

FALCON Locks & Security Products

To order Falcon F Series locksets, please consult page 3 for ordering information and assistance.

Indicates interchangeable core available.

Catalog Number	Function	Description	ANSI No. & Grade
F101		**Passage/Closet Latchset** Latch bolt by levers at all times.	F75-2
F231		**Patio Lock** Deadlocking latch bolt by inside knobs/levers except when both knobs/levers are locked by turn button inside. Manually returning the turn button to the unlocked position releases both knobs/levers.	F77-2
F301		**Privacy Lock** Latch bolt by levers. Outside lever locked by push button in inside lever. Rotating inside lever releases button. Emergency release in outside lever.	F76-2
F331		**Privacy Lock** Latch bolt by knob from either side except when both knobs are locked by turn button inside. Emergency release opening in outside knob. Manually returning the turn button to the unlocked position releases both knobs.	F76-2
F521		**Entry/Office Lock** Deadlocking latch bolt operated by knob/lever except when outside knob/lever is locked by turn button inside. Inside knob/lever always free. When outside knob/lever is locked, latch bolt is operated by key in outside knob/lever or by rotating inside knob/lever. Turn button must be manually returned to the unlocked position to release outside knob/lever. Lock may be locked or unlocked by key in cylinder outside.	F81-2
F561		**Classroom Lock** Deadlocking latch bolt operated by knob/lever. Outside knob/lever is locked by key in outside knob/lever. Inside knob/lever is always free.	F84-2
F581		**Storeroom Lock** Knobs—Deadlocking latch bolt operated by inside knob or key outside. Outside knob rigid. Levers—Deadlocking latch bolt operated by inside lever at all times. Rotating key in outside lever temporarily unlocks mechanism allowing lever to retract latch bolt. When key is removed, outer lever becomes rigid.	F86-2
F12		**Dummy Trim** Single Trim—Through-bolted from inside.	

F Series

FALCON
Locks & Security Products

Falcon Interchangeable Cores

Catalog Number	Description
C606	For use in all F Series I/C keyed locks—6 pin (cover style)
C607	For use in all F Series I/C keyed locks—7 pin (cover style)
CB806	For use in all F Series I/C keyed locks—6 pin (cap style)
CB807	For use in all F Series I/C keyed locks—7 pin (cap style)

Note: Specify finish 606 or 626.
Specify keyway: "A" (standard) or other keyways.

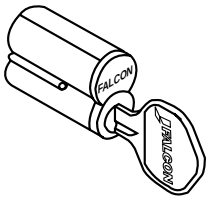

Interchangeable Core
Cover Style

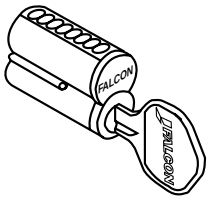

Interchangeable Core
Cap Style

Falcon Standard Cylinders

Catalog Number	Description
A23155-00	For use in all F Series keyed locks—5 pin
A23165-00	For use in all F Series keyed locks—6 pin

Note: Specify finish: 606 or 626.
Specify keyway: "E", "G" (standard),"H", "K", "L", "N", "P".

Standard Cylinders with Competitor Keyways-6 Pin

Catalog Number	Description
A23170-008	Arrow 'O' Bitted
A23170-8KA	Arrow 'KA' Keyed Alike 4
A23170-8KD	Arrow 'KD' Keyed Different
A23167-008	Corbin 60 'O' Bitted
A23167-8KD	Corbin 60 'KD' Keyed Different
A23168-008	Russwin D1 'O' Bitted
A23168-8KD	Russwin D1 'KD' Keyed Different
A23174-008	Corbin Russwin L4 'O' Bitted
A23166-008	Sargent LA 'O' Bitted
A23166-8KD	Sargent LA 'KD' Keyed Different
A23160-008	Schlage C 'O' Bitted
A23160-8KA	Schlage C 'KA' Keyed Alike 4
A23160-8KD	Schlage C 'KD' Keyed Different
A23159-008	Schlage E 'O' Bitted
A23169-008	Yale 8 (PARA) 'O' Bitted
A23169-8KD	Yale (PARA) 'KD' Keyed Different
A23158-008	Yale GA 'O' Bitted

Note: Specify finish 606 or 626.

Strikes

Furnished with a 2-3/4" T-Strike unless specified otherwise.

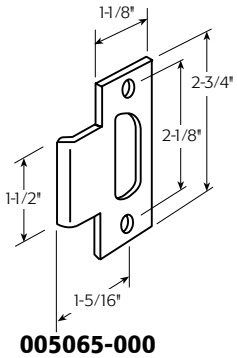

005065-000
Square Corner T-Strike

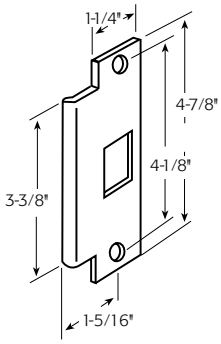

005164-000
ANSI Prep A115.2

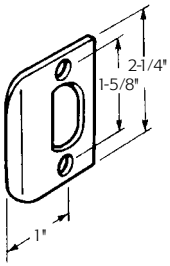

005104-000
Full Lip, Square Corner

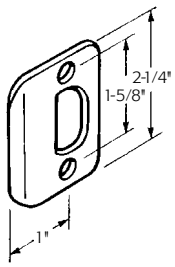

005104-001
Full Lip, 1/4" Radius Corner

Note: Specify finish: 605, 606, 612, 613, 626 or 630.

Questions? Call: 800-266-4456 / FAX: 800-777-8229 / or e-mail info@falconlock.com
Falcon Lock Company 2650 Orbiter Street Brea, CA 92821-6265 / Visit us on the Internet at www.falconlock.com

IR Security & Safety

FALCON Locks & Security Products

F Series

Latches for F Series locks are available standard non-UL listed or when requested UL listed for 1-1/2 hour, fire rated doors. 2-3/4" backset standard, 2-3/8" or 5" optional.

Unless otherwise specified, we furnish a 2-1/4" x 1" x square corner faceplate on 2-3/8" backset latches and 2-1/4" x 1-1/8" x square corner on 2-3/4", 3-3/4" or 5" backset latches.

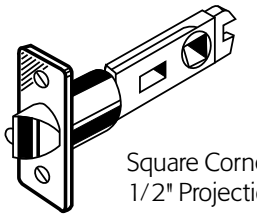

Square Corner
1/2" Projection

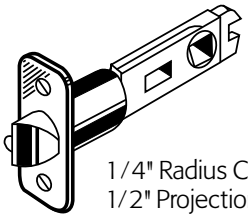

1/4" Radius Corner
1/2" Projection

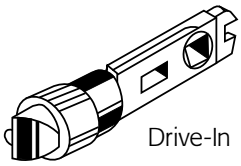

Drive-In

Latches—Non-UL listed

Catalog Number	Description	Faceplate Size	Corner
A31020-000	2-3/8" Backset Spring	2-1/4" x 1"	Square
A31020-00D	2-3/8" Backset Deadlocking	2-1/4" x 1"	Square
A31021-000	2-3/8" Backset Spring	2-1/4" x 1"	Radius
A31021-00D	2-3/8" Backset Deadlocking	2-1/4" x 1"	Radius
A31029-000	2-3/8" Backset Spring	Drive–In	Round
A31029-00D	2-3/8" Backset Deadlocking	Drive–In	Round
A31030-000	2-3/4" Backset Spring	2-1/4" x 1"	Square
A31030-00D	2-3/4" Backset Deadlocking	2-1/4" x 1"	Square
A31031-000	2-3/4" Backset Spring	2-1/4" x 1"	Radius
A31031-00D	2-3/4" Backset Deadlocking	2-1/4" x 1"	Radius
A30035-000	2-3/4" Backset Spring	2-1/4" x 11/8"	Square
A30035-00D	2-3/4" Backset Deadlocking	2-1/4" x 11/8"	Square
A31039-000	2-3/4" Backset Spring	Drive–In	Round
A31039-00D	2-3/4" Backset Deadlocking	Drive–In	Round

Note: Specify finish: 605, 612, 613, 630.

Latches—UL listed-1-1/2 Hour

1-1/2 Hour

Catalog Number	Description	Faceplate Size	Corner
A31420-000	2-3/8" Backset Spring	2-1/4" x 1"	Square
A31420-00D	2-3/8" Backset Deadlocking	2-1/4" x 1"	Square
A31421-000	2-3/8" Backset Spring	2-1/4" x 1"	Radius
A31421-00D	2-3/8" Backset Deadlocking	2-1/4" x 1"	Radius
A31430-000	2-3/4" Backset Spring	2-1/4" x 1"	Square
A31430-00D	2-3/4" Backset Deadlocking	2-1/4" x 1"	Square
A31431-000	2-3/4" Backset Spring	2-1/4" x 1"	Radius
A31431-00D	2-3/4" Backset Deadlocking	2-1/4" x 1"	Radius
A31435-000	2-3/4" Backset Spring	2-1/4" x 1-1/8"	Square
A31435-00D	2-3/4" Backset Deadlocking	2-1/4" x 1-1/8"	Square
A31450-000	5" Backset Spring	2-1/4" x 1"	Square
A31450-00D	5" Backset Deadlocking	2-1/4" x 1"	Square
A31451-000	5" Backset Spring	2-1/4" x 1"	Radius
A31451-00D	5" Backset Deadlocking	2-1/4" x 1"	Radius
A31455-000	5" Backset Spring	2-1/4" x 1-1/8"	Square
A31455-00D	5" Backset Deadlocking	2-1/4" x 1-1/8"	Square

Note: Specify finish: 605, 612, 613, 630.

Dust Boxes

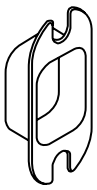

012191-003-70
1/2" deep. May be used with any 2-3/4" high (T) strike.

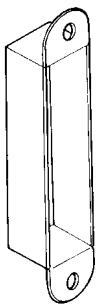

005099-000-30
1" deep. May be used with any 4-7/8" high (ANSI) strike.

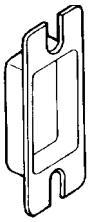

030115-000-70
7/16" deep. May be used with any 2-1/4" (Full Lip) high strike.

FALCON Locks & Security Products

Construction Keying

Falcon offers three different construction key systems depending on the size of and application within the project. Both systems permit the installation and use of regular door locks during construction, yet completely preserve the security of the keying system for the ultimate building owner. The Master, Grand Master and change keys are never with the locks during the construction phase of a building. Only the "construction" keys are sent to the job site. Where the job permits, we will utilize the "Lost Pin System" as our standard system for construction keying. Larger or more complicated jobs may require the use of our "Blockokey System" for construction keying. Where security is of little concern, like for interior doors the "Disposable Construction Core" is recommended.

"Disposable Construction" Interchangeable Cores

This newly designed disposable construction core is an inexpensive alternative to interior keyed construction cores. This core should be used on interior door applications or where security on a site is not a concern. No keys need to be issued. The disposable core is inserted in the lever or knob and is operated by a thumb turn, which retracts the latch bolt. Please use either brass or permanent construction cores on exterior doors or secured areas.

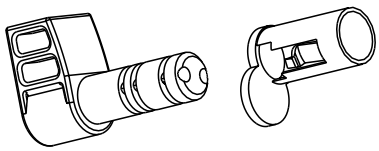

Locks with "Lost Pin System"

Our "lost" pin construction key system consists of one construction pin and a shallow hole in the side of the plug.

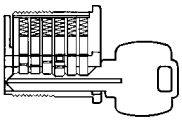

Construction Key—**KB566**

When the "construction" key is used, the construction pin is always in the cylinder plug, sitting on top of the bottom pin.

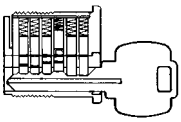

Master Key—**KB578**

When the Master key is inserted, the construction pin is pushed up into the cylinder housing. As the Master key is rotated to the right, the construction pin will drop into the hole in the plug, thereby eliminating any future use of the construction key.

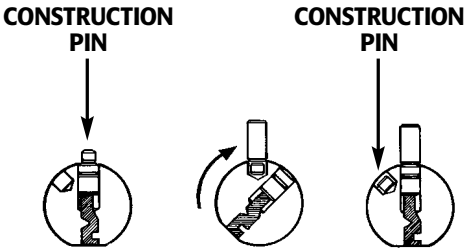

Locks with Blockokey® Cylinders

All lock cylinders on a specific project are operable by a special "project key." Duplicates of this key may be assigned by the building contractor to workmen and subcontractors as required. No regular change keys or Master keys are needed on the job. This eliminates the possibility of subsequent exposure from lost or stolen keys.

How to order locks with Blockokey® Cylinders

Blockokey® locksets are ordered by adding the word "Blockokey" after the balance of the ordering information.
EXAMPLE: 72 Each B511 D 626 1AA-72AA (Blockokey)

How with Blockokey® Cylinders are Used

1.

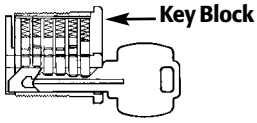

Project Key—**KB531**

Lock cylinder is operated by the special "project key." The last two pins in the cylinder are held inoperative by the key block.

2.

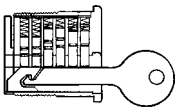

Removal Tool—**KB536**

The special "project key" is canceled out by removal of the key block. A key block removal tool is furnished with the Master keys for the locks. Simply push the removal tool into the keyway, then withdraw it to remove the block. Thereafter, the "project key" will no longer operate the lock cylinder.

3.

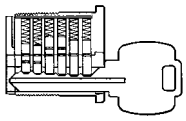

Change or Master Key—**KB578**

Cylinder is now only operable by the regular change key or Master key.

Questions? Call: 800-266-4456 / FAX: 800-777-8229 / or e-mail info@falconlock.com
Falcon Lock Company 2650 Orbiter Street Brea, CA 92821-6265 / Visit us on the Internet at www.falconlock.com

IR Security & Safety

Conversion Chart

F Series

FALCON
Locks & Security Products

F Series Grade 2 Light/Medium Duty Tubular Lever Lock

ANSI No./ Grade	Function	Falcon	Arrow	Best	Corbin/ Russwin	Marks	Sargent	Yale
F75-2	Passage	F101	L01	73KN	CL3710	N	65U15	4301LN
F77-2	Patio	F231	L04	-	-	L	-	-
F76-2	Privacy	F301	L02	73KL	CL3720	-	65U65	4302LN
F81-2	Entry	F521	L11	73KA	CL3751	A	65G05	4307LN
F84-2	Classroom	F561	L17	73KR	CL3755	S	65G37	4308LN
F86-2	Storeroom	F581	L12	73KD	-	F	65G04	4305LN
	Dummy - Single	F12	L08	1DT	CL3750	-	65U93	4355LN

Trim Styles	Falcon	Arrow	Best	Corbin/ Russwin	Marks	Sargent	Yale
	Avalon	-	-	-	-	-	-
	Dane	SR	15C	NZD	17	KL	AU
	Quantum	BRR	-	-	27	KP	-

F Series Grade 2 Light/Medium Duty Tubular Knobs Lock

ANSI No./ Grade	Function	Falcon	Arrow	Best	Corbin/ Russwin	Marks	Sargent	Yale
F75-2	Passage	F101	M01	63KN	CK4710	N	6U15	4301
F77-2	Patio	F231	M04	63KP	-	L	-	-
F76-2	Privacy	F331	M02	63KL	CK4720	-	6U65	4302
F81-2	Entry	F521	M11	63KAB	CK4751	A	6G05	4307
F84-2	Classroom	F561	M17	63KR	CK4755	S	6G37	4308
F86-2	Storeroom	F581	M12	63KD	-	F	6G04	4305
	Dummy- Single	F12	M08	1DT	CK4750	-	6U93	4355

Trim Styles	Falcon	Arrow	Best	Corbin/ Russwin	Marks	Sargent	Yale
	Hana	BD	-	GWC	11	OB	CA
	Troy	TA	4C	-	-	OS	-
	Elite	DD	6C	BWC	-	ON	-

All effort has been made to make this information comprehensive. Since no two products are exactly alike, this data represents those products which are similar. This information was obtained from trade services and is not guaranteed nor meant to represent any product as equal to any other product.

FALCON
Locks & Security Products

Falcon Fits

2650 Orbiter Street, Brea, CA 92821-6265
Phone 714-572-6008/800-266-4456
US FAX 800-777-8229/International FAX 714-572-0482
www.falconlock.com

Security & Safety®

Pub. No. FA-GN-1006
Ver. 1, Rev. 6/00
©2000 Ingersoll-Rand Company
PC14747