Pushbar Parts List

ITEM	PART NO.	SPECIFY	DESCRIPTION
1			Active Head
	650F37-8		ED4200
	650F40-8		ED4400 RHR*
	650F41-8		ED4400 LHR*
	650F45-8		ED4800 RHR*
	650F46-8		ED4800 LHR*
	650F35-8		ED5200
	650F36-8		ED5200A
	650F38-8		ED5400(A) RHR*
	650F39-8		ED5400(A) LHR*
	650F42-8		ED5600(A)
	650F43-8		ED5800(A) RHR*
	650F44-8		ED5800(A) LHR*
2			Cover, Active Head
	650F03	fin	ED4200
	650F04	fin	ED4400
	650F05	fin	ED4800
	650F00	fin	ED5200(A)
	650F01	fin	ED5400(A)
	650F02	fin	ED5600(A), ED5800(A)
3			Bottom Rail
	650F19	fin	ED5000 36"
	650F20	fin	ED4000 36"
	650F21	fin	ED4000/5000 48"
5			Bar & Carrier Assembly
	650F22-8		ED5000 36"
	650F23-8		ED4000 36"
	650F24-8		ED4000/5000 48"
6			Cover, Bar
	650F07	fin	36"
	650F08	fin	48"
7			Cover, End
	650F11	fin	ED5000(A) 36" std.
	650F12	fin	ED5000 36" Cylinder Dogging
	650F13	fin	ED4000 36" std.
	650F14	fin	ED4000 36" Cylinder Dogging
	650F15	fin	All 48" std.
	650F16	fin	All 48" Cylinder Dogging
8	650F10-5	622	Touch Pad Cap, Front
9	650F09-5	622	Touch Pad Cap, Rear
10	650F18-9		Bar Cap, Black Nylon

* Field reversible

ITEM	PART NO.	SPECIFY	DESCRIPTION
11	653F46	fin	End Cap & Liner Assembly
12	650F48-9		Trim Slide
13	650F49-8		Trim Slide Retainer
14			Dogging Assembly
	650F52-8		Standard
	650F96-8		Cylinder Type (M52)
15	656F40-8		Dogging Key (5/32" hex)
16	650F27-9		Dogging Hole Plug
17	650F94-2		Cylinder Nut (M52)
18	650F95-5		Cylinder Spacer Sleeve (M52)
19			Collar, Dogging Cylinder (M52)
	none		1 1/8" Cylinder
	270F15	fin	1 1/4" Cylinder
	654F07	fin	1 1/2" Cylinder
20	1000-118-A02		Dogging Cylinder (see p. 36 for options)
21			End Clamp Packet consists of: End Clamp, End Clamp Screws (2), Mounting Screws (2) for Latch Head, Hex Dogging Key (except ED5000A)
	650F32-8		ED4000, ED5000
	650F33-8		ED5000A
22	220F70-8	622	Screw, Touch Bar Caps, Torx Cap #6–32 x 3/4" (4)
23	650F34	fin	Screw Packet, Cover #8–32 x 5/16" FHUM-PH (4)
24	650F53-8		Screw, Dogging Assy., #10–24 x 5/8" PHT-T-PN (2)
25	650F50-8		Screw, Trim Slide, #8–32 x 1/2" FHT-PH
26	650F51-8		Screw, Latch Head to Carrier, #8–32 x 1/4" PHT-C-PH
27	654F20-8		Mounting Packet for Non-fire Rated Devices, Wood Door
28	652F29-8		Sex Nut Packet (4) Fire-rated Devices incl. (M54) option
53	656F41		Touch Pad Spring (not shown)
54	656F66-8		#10–24 x 1/4" PH Screw (8)

Bar Components

3
54
5
14
OR
17
18
11
23
21
21
24
7
19
20
OR
16
10
21
15
22
9
25
13
12
Not used in ED5600
6
2
OR
23
8
22
1
26
not shown
21
27
28
21

Difference in active heads

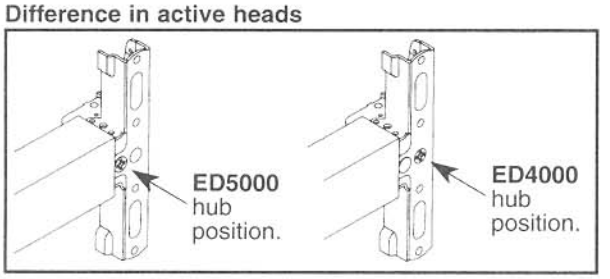

ED5000DB Inactive Bar

ITEM	PART NO.	SPECIFY	DESCRIPTION
3	650F21	fin	Bottom Rail, 48"
4	650F99-8		Carrier Bar
7	650F93	fin	Cover, End
11	653F46		End Cap & Liner Assembly (2)
21	650F33-8		End Clamp Packet consists of: End Clamp End Clamp Screws (2) Mounting Screws for Latch Head (2)
23	650F34	fin	Screw Packet, Cover

Inactive Bar Components

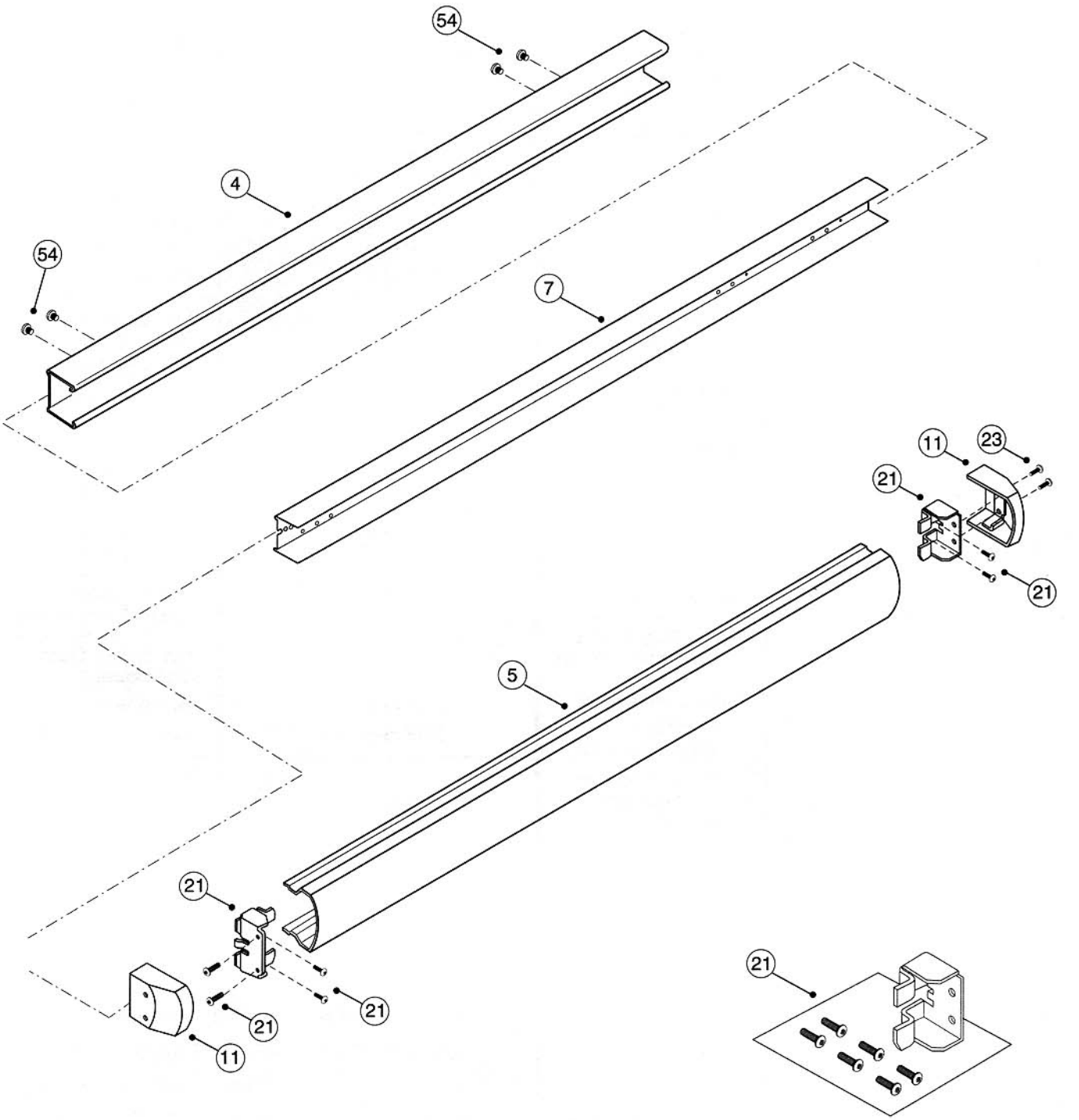

x7 Trim Parts List

ITEM	PART NO.	SPECIFY	DESCRIPTION
1			Escutcheon
	651F13	fin	x710, x750
	651F14	fin	x755, x759
2	see chart		Grip
3	see page 36		Rim Cylinder
4			Cylinder Collar
	270F15	fin	1 1/8" Cylinder
	654F07	fin	1 1/4" Cylinder
	654F08	fin	1 1/2" Cylinder
5	651F67-5		Housing & Cam Assy. 55/59 Function only
6	655F02-8		Screw, Cylinder Mounting (2)
7	656F65-8		Screw, 55/59 Function
8	651F63-8		Gear and Black Housing Assembly (all but x750)
9	651F50-8		Screw, Tailpiece Plate, #6 x 3/8" PHT-T-PH (2)
10			Tailpiece Assembly
	651F71-8		1 3/4" Door Without Shim Kit
	655F70-8		2" - 2 1/4" Door or Std. Door with Shim Kit
11			Gear
	651F64-8		Levers
	651F77-8		G Knob
	655F54-8		Dummy Lever
	655F55-8		Dummy Knob
12			Hub
	651F65-5		Levers
	656F64		G Knob
13	651F72-8		Hub Bushing, Levers
14	651F66-8		Cotter Pin
15	651F73-8		Nut, Spindle
16			Thimble Insert, Nylon (not shown)
	118F29-9		Levers
	651F38-9		G Knob
17			Screw Packet, Mounting
	652F12-8		1 3/4" - 2" Door
	652F13-8		2 1/4" Door
18			Spring, Grip Return (not shown)
	651F62-8		Levers, RHR (blue)
	651F61-8		Levers, LHR (red)
	651F75-8		Knob
19	651F40-8		Spring (not shown) Under Tailpiece
20	651F39-8		Hex Nut / Bushing for Spring (not shown)
21	651F70-8		Washer Under Tailpiece (not shown)
22			Nut, Spindle Gear (not shown)
	651F79-8		3/8 –16 for x750 Levers
	651F78-8		1/4 – 20 for G Knob
49			Thimble (not shown)
	652F19	fin	Levers
	651F28	fin	G Knob

Grip (Specify Finish)

Part numbers are for pinned assemblies with spindle.

Name	Letter	Standard	Knurled	Abrasive
Armstrong	A	652F78	652F79	652F80
Citation	C	652F66	652F67	652F68
Dirke RHR	D	652F69	652F70	652F71
Dirke LHR	D	652F72	652F73	652F74
Essex	E	652F57	652F58	652F59
Global	G	656F45	656F48	656F51
Lustra	L	652F60	652F61	652F62
Newport	N	652F75	652F76	652F77
Princeton	PR	652F81	652F82	652F83
Regis	R	652F63	652F64	652F65

x7 Trim Components

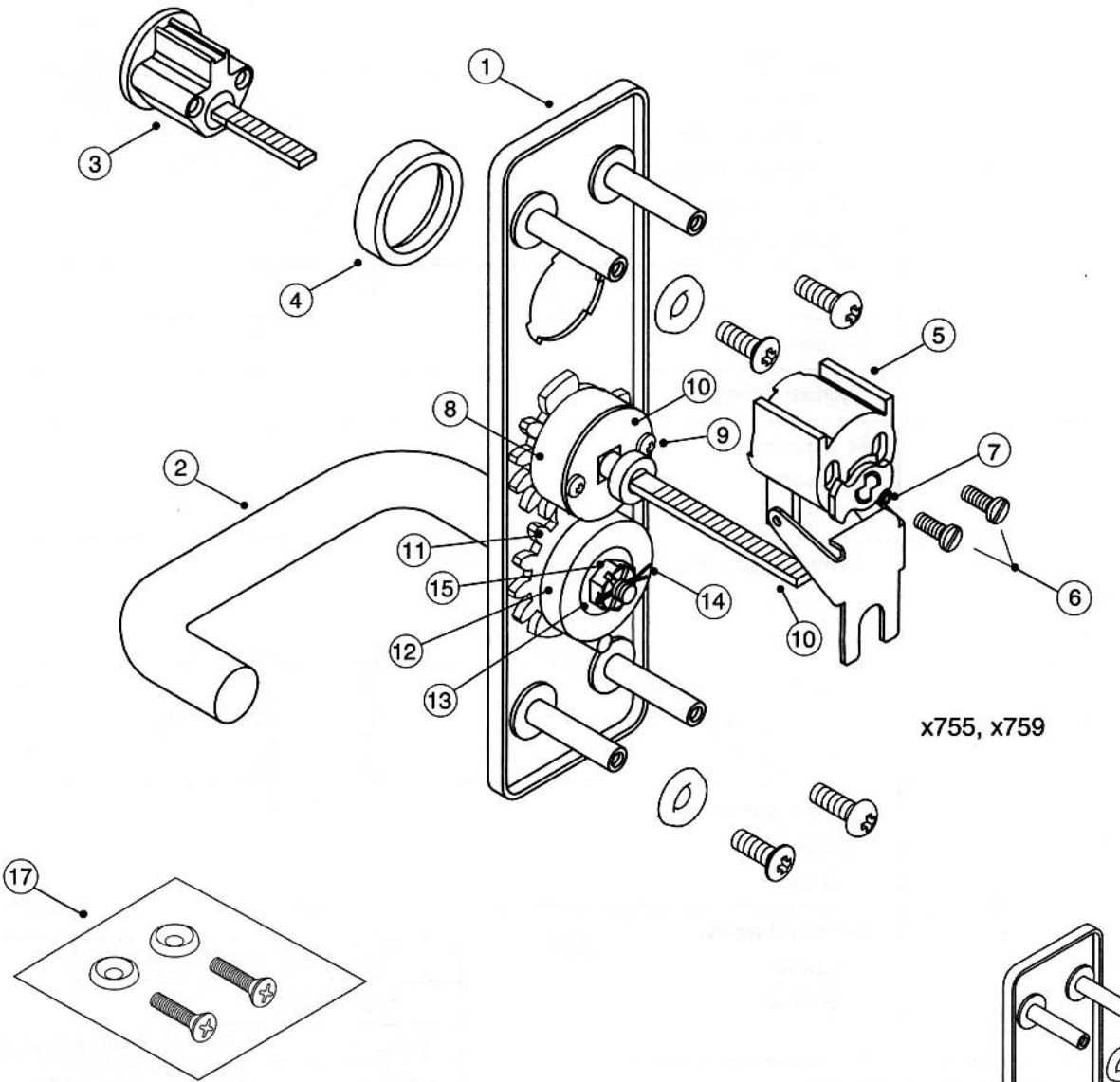

x755, x759

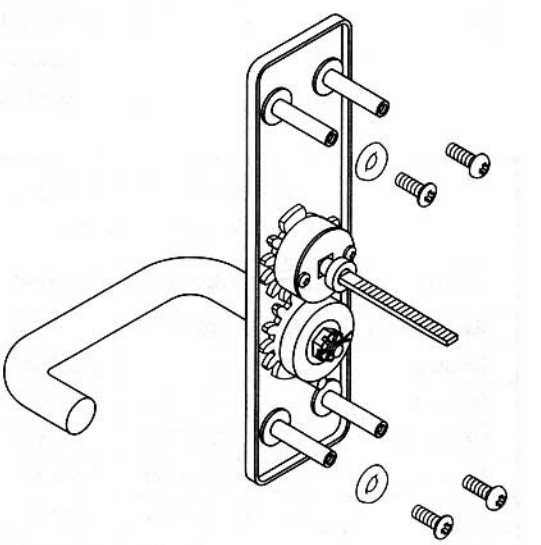

x710 shown
x750 dummy

x designates grip letter(s)	
A = Armstrong	**L** = Lustra (shown)
C = Citation	**N** = Newport
D = Dirke	**O** = Thumbturn operator
E = Essex	**PR** = Princeton
G = Global	**R** = Regis

x7M Trim Parts List

ITEM	PART NO.	SPECIFY	DESCRIPTION
1			Escutcheon
	656F57	fin	Cylinder x Lever
	656F56	fin	Cylinder x Knob
	656F55	fin	Blank x Lever
	656F54	fin	Blank x Knob
2	see chart		Grip
3	see page 36		Mortise Cylinder
4	see chart		Cylinder Collar
15			Nut, Spindle
	652F09-8		Lever
	652F08-8		Knob
16			Thimble Insert, Nylon (not shown)
	118F29-8		Levers
	651F38-9		G Knob
17			Screw Packet, Mounting
	652F12-8		1 3/4" - 2" Door
	652F13-8		2 1/4" Door
23			Spindle Washer
	652F05-8		Levers
	652F06-8		G Knob
24			Spindle Bracket
	652F04-8		Levers
	652F07-8		G Knob

Grip (Specify Finish)
1 3/4" - 2 1/4" Doors

Name	Letter	Standard	Knurled	Abrasive
Armstrong	A	653F71	653F72	653F73
Citation	C	653F59	653F60	653F61
Dirke RHR	D	653F62	653F63	653F64
Dirke LHR	D	653F65	653F66	653F67
Essex	E	653F50	653F51	653F52
Global	G	656F44	656F47	656F50
Lustra	L	653F53	653F54	653F55
Newport	N	653F68	653F69	653F70
Princeton	PR	653F74	653F75	653F76
Regis	R	653F56	653F57	653F58

Note: Numbers are pinned assemblies with spindle.

Cylinder Collar (Specify Finish)

Door Thickness		
1 3/4" to 2"	2 1/4"	Cylinder Length
447F42	447F41	1 1/8" mortise
610F02	447F42	1 1/4" mortise
609F36	610F02	1 1/2" mortise

x7M Trim Components

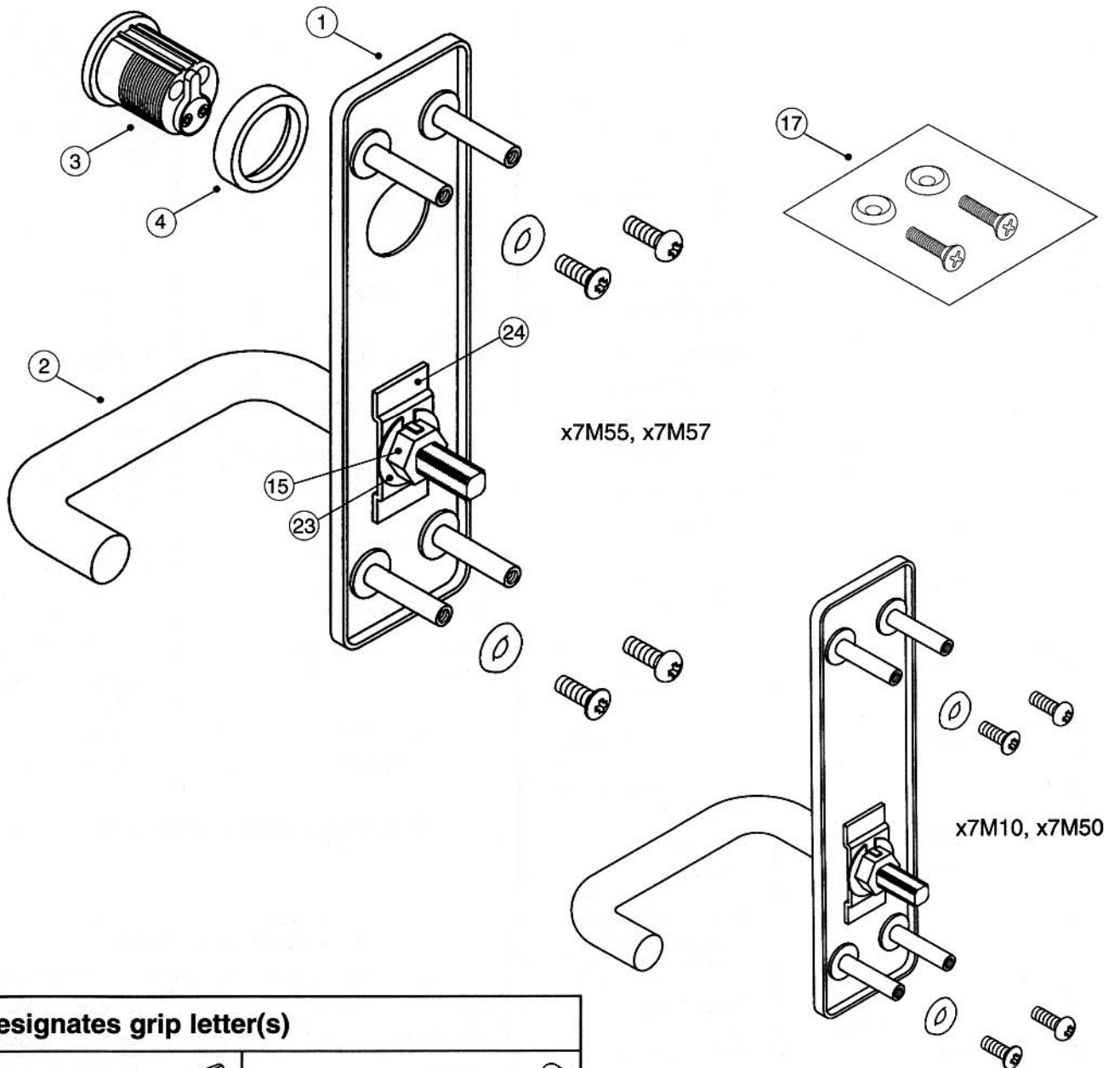

x designates grip letter(s)	
A = Armstrong	**L** = Lustra (shown)
C = Citation	**N** = Newport
D = Dirke	**O** = Thumbturn operator
E = Essex	**PR** = Princeton
G = Global	**R** = Regis

x8 Trim Parts List

ITEM	PART NO.	SPECIFY	DESCRIPTION
1			Escutcheon
	656F59	fin	Cylinder x Lever
	656F58	fin	Cylinder x Knob
	656F61	fin	Plain x Lever
	656F60	fin	Plain x Knob or Thumbturn
2	see chart		Grip
3	see page 36		Rim Cylinder
4			Cylinder Collar
	270F15	fin	1 1/8" Cylinder
	654F07	fin	1 1/4" Cylinder
	654F08	fin	1 1/2" Cylinder
5			Housing & Cam Assy.
	651F96-5		Keyed Functions x855, x859
	655F66-5		Non-Keyed Functions x810, x850
6	655F02-8		Screw, Cylinder Mounting (2)
7	656F65-8		Screw, 55/59 Function
16			Thimble Insert, Nylon (not shown)
	651F38-9		G8, O8
	118F29-9		Levers
19	651F40-8		Spring (not shown) Under Tailpiece x810, x855, x859
25	651F85-8		Cover Plate
26	651F94-8		Spring, Extension Levers only
27	651F92-8		Nut, Spring Post Levers only
28			Rack & Tailpiece Assembly
	651F82-8		x810, x855, x859
	652F21-8		x850
29	651F53-8		Clutch Lever
30	651F83-8		Pin, Clutch Lever
31	651F89-8		Retainer, Clutch Lever Pin
32	651F88-8		Nut, Cover Plate (not shown)
33	652F22-8		Hub (not shown)
34	652F23-9		Bushing, Nylon (not shown)
35	651F84-8		Washer, Grip (not shown)
36	651F87-8		Screw, Spindle #8–32 x 7/16" FHM-PH
37			Spring, Rack, (2) (not shown)
	651F93-8		Lever
	651F86-8		Knob, Thumbturn

Note: All mounting screws packed with device.

Grips (Specify Finish)

Part numbers are pinned assemblies with spindle.

Name	Letter	Standard	Knurled	Abrasive
Armstrong	A	653F05	653F06	653F07
Citation	C	652F93	652F94	652F95
Dirke RHR	D	652F96	652F97	652F98
Dirke LHR	D	652F99	653F00	653F01
Essex	E	652F84	652F85	652F86
Global	G	656F46	656F49	656F52
Lustra	L	652F87	652F88	652F89
Newport	N	653F02	653F03	653F04
Princeton	PR	653F08	653F09	653F10
Regis	R	652F90	652F91	652F92
Thumbturn	O	656F53	N/A	N/A

x8 Trim Components

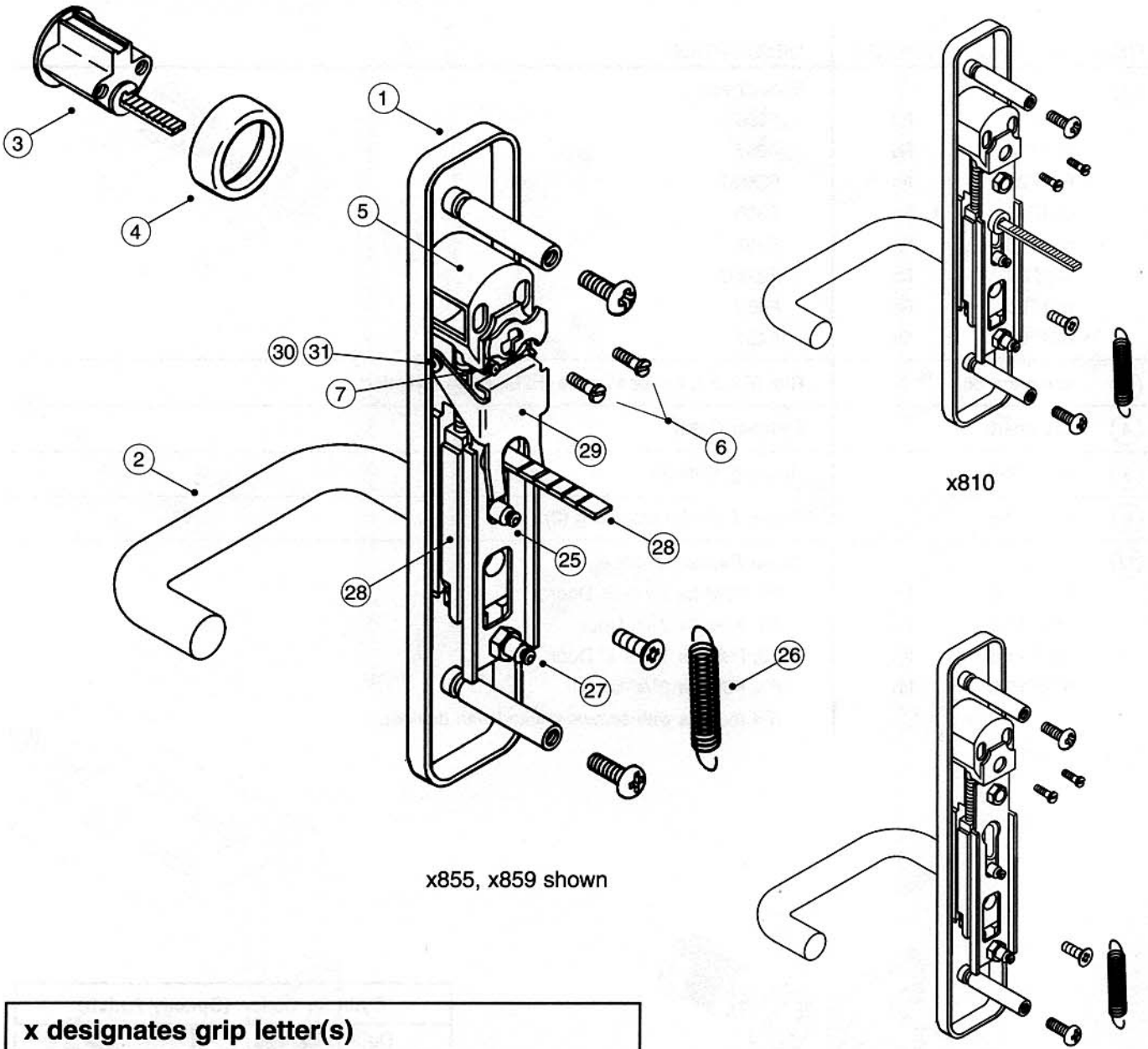

x designates grip letter(s)	
A = Armstrong	**L** = Lustra (shown)
C = Citation	**N** = Newport
D = Dirke	**O** = Thumbturn operator
E = Essex	**PR** = Princeton
G = Global	**R** = Regis

F2, F2M, F3, F3M, F4 Trim Parts List

ITEM	PART NO.	SPECIFY	DESCRIPTION
1			Escutcheon
	651F11	fin	F250
	651F12	fin	F257
	651F21	fin	F2M57
	651F15	fin	F350
	651F16	fin	F357
	651F24	fin	F3M57
	651F00	fin	F450
	651F01	fin	F457
3	see page 36		Rim (F2, F3, F4) or Mortise (F2M, F3M) Cylinder
4	see chart		Cylinder Collar
5	651F42-5		Housing, Cylinder
6	655F02-8		Screw, Cylinder Mounting (2)
17			Screw Packet, Mounting
	652F12-8	fin	F2, F2M for 1 3/4"- 2" Door
	652F13-8	fin	F2, F2M for 2 1/4" Door
	652F14-8	fin	F3, F3M for 1 3/4"- 2" Door
	652F15-8	fin	F3, F3M for 2 1/4" Door
			(F4 mounts with screws packed with device).

Cylinder Collar (Specify Finish)		
Door Thickness		
1 3/4" to 2"	2 1/4"	Cylinder Length
447F42	447F41	1 1/8" mortise
610F02	447F42	1 1/4" mortise
609F36	610F02	1 1/2" mortise
270F15		1 1/8" rim
654F07		1 1/4" rim
654F08		1 1/2" rim

F2, F2M, F3, F3M, F4 Trim Components

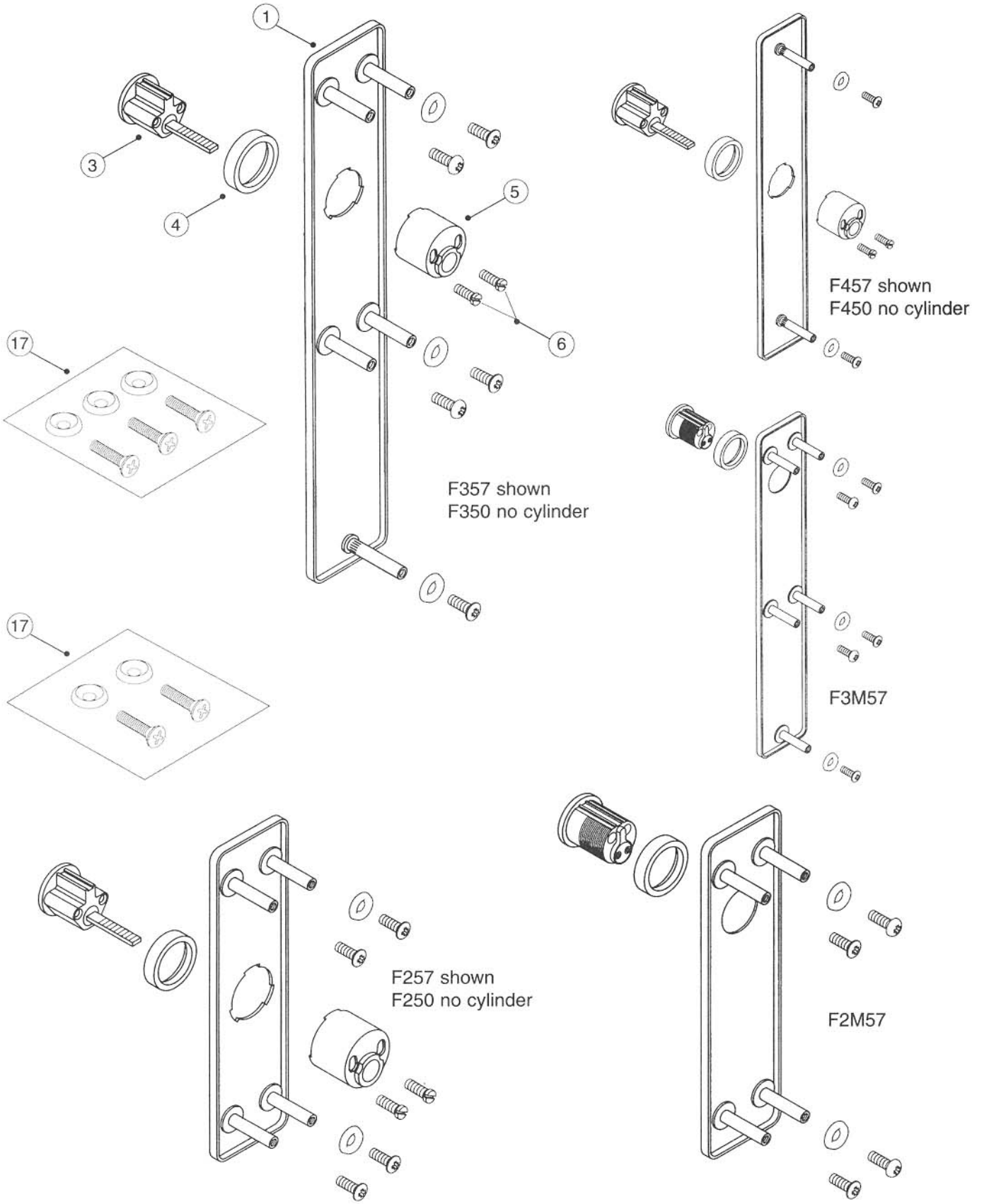

T13 Trim Parts List

ITEM	PART NO.	SPECIFY	DESCRIPTION
1			Escutcheon
	651F19	fin	T1310
	651F17	fin	T1350
	651F20	fin	T1355
	651F18	fin	T1357
2	651F35	fin	Thumbpiece
3	see page 36		Rim Cylinder
4			Cylinder Collar
	270F15	fin	1 1/8" Cylinder
	654F07	fin	1 1/4" Cylinder
	654F08	fin	1 1/2" Cylinder
5			Housing, Cylinder
	651F67-5		T1355
	651F42-5		T1357
6	655F02-8		Screw, Cylinder Mounting (2)
7	656F65-8		Screw, 55/59 Function
9	651F50-8		Screw, Tailpiece Plate, #6 x 3/8" PHT-T-PH (2)
10			Tailpiece Assembly
	651F55-8		1 3/4" Door without Shim Kit
	655F69-8		2" - 2 1/4" Door or 1 3/4" Door with Shim Kit
17			Screw Packet, Mounting
	652F14-8		1 3/4" - 2" Doors
	652F15-8		2 1/4" Doors
19	651F40-8		Spring (not shown) Under Tailpiece
20	651F39-8		Hex Nut / Bushing for Spring (not shown) T1310, T1355
38	651F36-2	fin	Pull, Straight
39	651F43-8		Screw Post
40	651F44-8		Lock Washer, Screw Post
41	651F47-8		Spring, Thumbpiece
42	651F49-8		Slider, Thumbpiece
43	651F54-5		Housing, Tailpiece Assembly
44	651F41-8		Screw, #1/4 –20 x 5/8" RHM-PH
48	651F48-8		Pin, Thumbpiece

T13 Trim Components

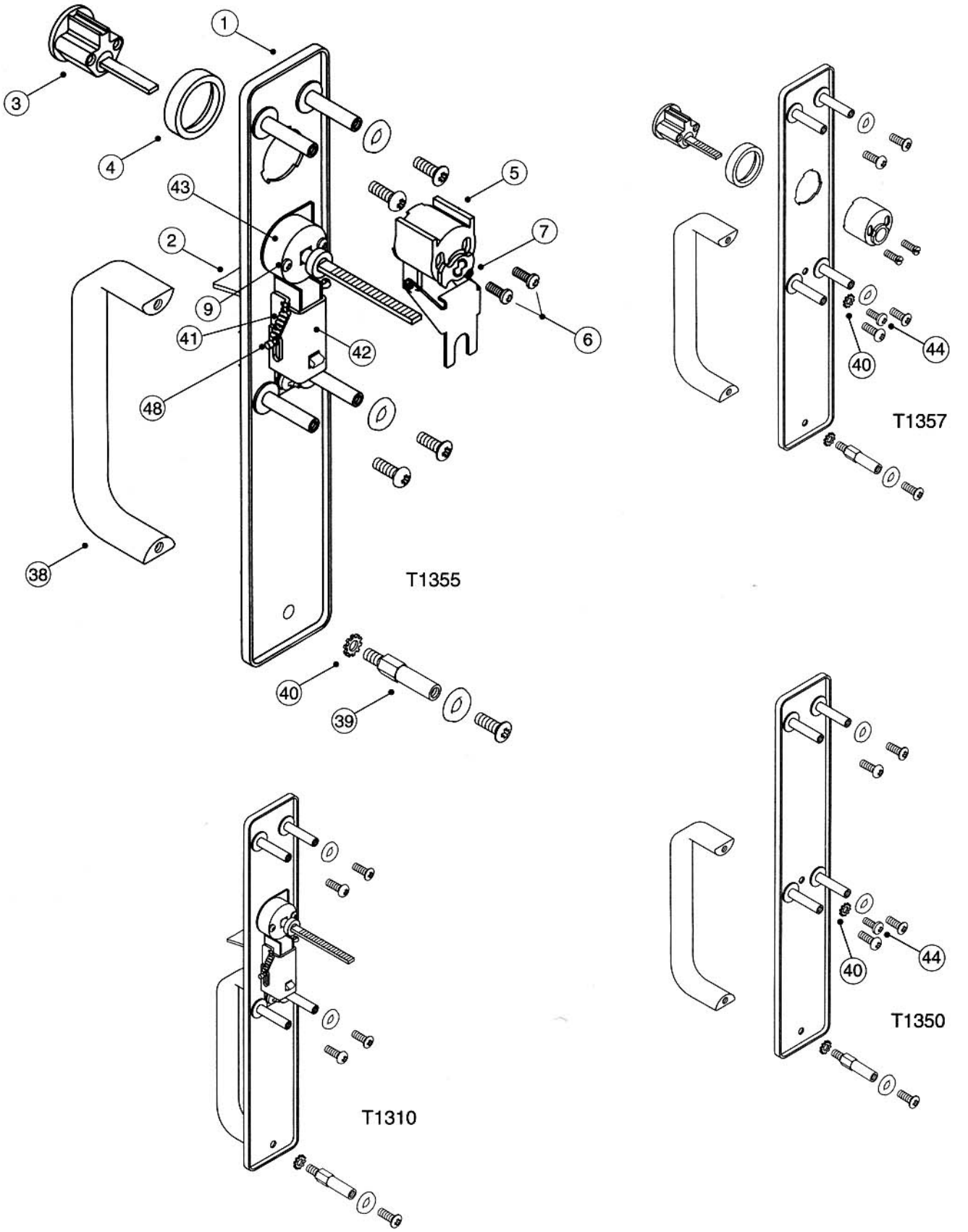

T13M Trim Parts List

ITEM	PART NO.	SPECIFY	DESCRIPTION
1			Escutcheon
	651F27	fin	T13M10
	651F26	fin	T13M55
	651F25	fin	T13M57
2	651F34	fin	Thumbpiece
3	See page 36		Mortise Cylinder
4	see chart		Cylinder Collar
17			Screw Packet, Mounting
	652F14-8		1 3/4" - 2" Door
	652F15-8		2 1/4" Door
38	651F36-2	fin	Pull, Straight
39	651F43-8		Screw Post
40	651F44-8		Lock Washer, Screw Post (2)
41	651F59-8		Spring, Thumbpiece
44	651F41-8		Screw, #1/4–20 x 5/8" RHM-PH
45	651F56-8		Thumbpiece Tab (not shown)
46	651F57-8		Thumbpiece Bracket
47	651F60-8		Retaining Ring (2)
48	651F58-7		Pin, Thumbpiece

Cylinder Collar (Specify Finish)		
Door Thickness		
1 3/4" to 2"	2 1/4"	Cylinder Length
447F42	447F41	1 1/8" mortise
610F02	447F42	1 1/4" mortise
609F36	610F02	1 1/2" mortise

T13M Trim Components

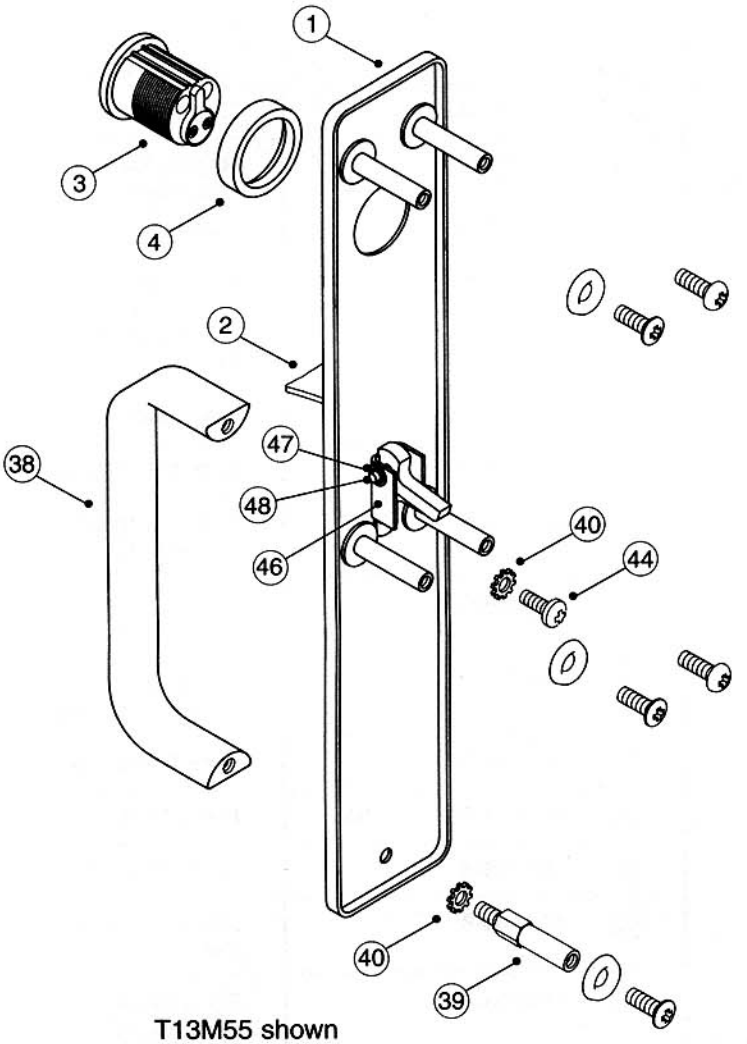

T13M55 shown
T13M10 no cylinder

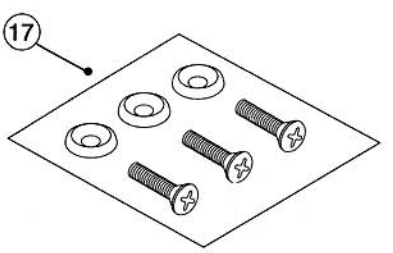

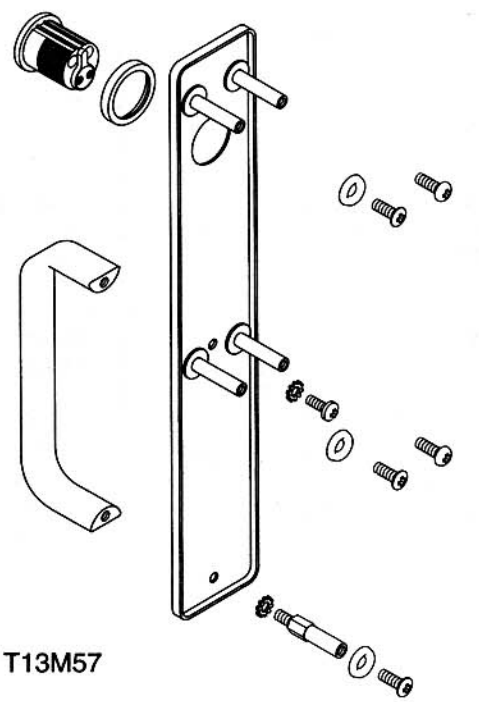

T13M57

O14, T14 Trim Parts List

ITEM	PART NO.	SPECIFY	DESCRIPTION
1			Escutcheon
	656F62	fin	O1410 Top
	656F63	fin	O1455, O1459 Top
	651F09	fin	T1410 Top
	651F06	fin	T1450 Top
	651F08	fin	T1455,T1459 Top
	651F04	fin	T1457 Top
	651F10	fin	Bottom
2			Operator
	651F35	fin	Thumbpiece (T14)
	656F53	fin	Thumbturn / Spindle Assy. (O14)
3	see page 36		Rim Cylinder
4			Cylinder Collar
	270F15	fin	1 1/8" Cylinder
	654F07	fin	1 1/4" Cylinder
	654F08	fin	1 1/2" Cylinder
5			Housing
	651F97-5		10 Function
	651F42-5		57 Function
	651F96-5		55/59 Function
6	655F02-8		Screw, Cylinder Mounting (2)
7	656F65-8		Screw, 55/59 Function
16	651F38-9		Thimble Insert, Nylon (not shown) O14 only
17			Screw Packet, Mounting
	652F10-8	fin	1 3/4"- 2" Door
	652F11-8	fin	2 1/4" Door
19	651F40-8		Spring (not shown) Under Tailpiece for 10, 55, 57 Functions

ITEM	PART NO.	SPECIFY	DESCRIPTION
25	651F85-8		Cover Plate
28	651F82-8		Rack & Tailpiece Assembly
29	651F53-8		Clutch Lever
30	651F83-8		Pin, Clutch Lever
31	651F89-8		Retainer, Clutch Lever Pin (2)
32	651F88-8		Nut, Cover Plate (2)
33	652F22-8		Hub (not shown)
34	652F23-9		Bushing, Nylon (not shown)
35	651F84-8		Washer, Grip (not shown)
36	651F87-8		Screw, Spindle #8–32 x 7/16", O14
37	651F86-8		Rack Spring (2)
38	651F37-2	fin	Pull, Offset
39	651F43-8		Screw Post (2)
40	651F44-8		Lock Washer, Screw Post (2)
50	651F98-8		Pin, Groove, (not shown) 5/32" x 1 1/8" for T1410, T1455, T1459

O14, T14 Trim Components

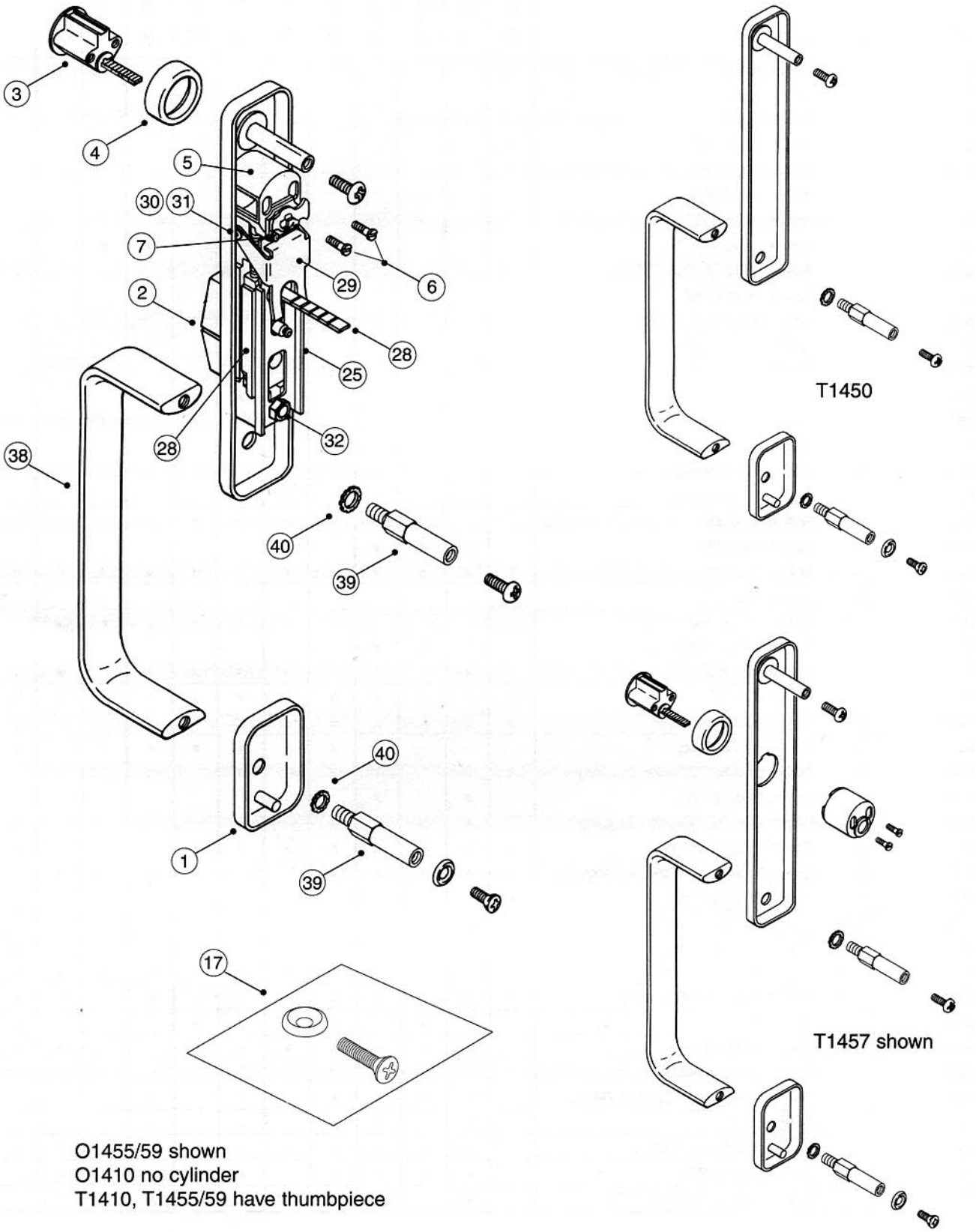

O1455/59 shown
O1410 no cylinder
T1410, T1455/59 have thumbpiece

Device Parts Cross Reference

	Part Number	Specify	Description	ED 5000DB	ED 4200	ED 4400	ED 4800	ED 5200	ED 5200A	ED 5400	ED 5400A	ED 5600	ED 5600A	ED 5800	ED 5800A
1	650F35-8		Active Head					x							
	650F36-8		Active Head						x						
	650F37-8		Active Head		x										
	650F38-8		Active Head RHR*							x	x				
	650F39-8		Active Head LHR*							x	x				
	650F40-8		Active Head RHR*			x									
	650F41-8		Active Head LHR*			x									
	650F42-8		Active Head									x	x		
	650F43-8		Active Head RHR*											x	x
	650F44-8		Active Head LHR*											x	x
	650F45-8		Active Head RHR*				x								
	650F46-8		Active Head LHR*				x								
2	650F00	fin	Cover, Active Head					x	x						
	650F01	fin	Cover, Active Head							x	x				
	650F02	fin	Cover, Active Head									x	x	x	x
	650F03	fin	Cover, Active Head		x										
	650F04	fin	Cover, Active Head			x									
	650F05	fin	Cover, Active Head				x								
3	650F19	fin	Bottom Rail 36"					x	x	x	x	x	x	x	x
	650F20	fin	Bottom Rail 36"		x	x	x								
	650F21	fin	Bottom Rail 48"	x	x	x	x	x	x	x	x	x	x	x	x
4	650F99-8	fin	Carrier Bar	x											
5	650F22-8		Bar & Carrier Assembly 36"					x	x	x	x	x	x	x	x
	650F23-8		Bar & Carrier Assembly 36"		x	x	x								
	650F24-8		Bar & Carrier Assembly 48"		x	x	x	x	x	x	x	x	x	x	x
6	650F07	fin	Cover, Bar 36"	x	x	x	x	x	x	x	x	x	x	x	x
	650F08	fin	Cover, Bar 48"	x	x	x	x	x	x	x	x	x	x	x	x
7	650F11	fin	Cover, End 36" std.					x	x	x	x	x	x	x	x
	650F12	fin	Cover, End 36" Cylinder Dogging		x			x		x		x		x	
	650F13	fin	Cover, End 36" std.		x	x	x								
	650F14	fin	Cover, End 36" Cylinder Dogging		x	x	x	x							
	650F15	fin	Cover, End All 48" std.	x	x	x	x	x	x	x	x	x	x	x	x
	650F16	fin	Cover, End All 48" Cylinder Dogging		x	x	x	x		x		x		x	
	650F93	fin	Cover, End Dummy	x											
8	650F10-5	622	Touch Pad Cap, Front		x										
9	650F09-5	622	Touch Pad Cap, Rear		x	x	x	x	x	x	x	x	x	x	x
10	650F18-9		Bar Cap, Black Nylon		x	x	x	x	x	x	x	x	x	x	x
11	653F46	fin	End Cap & Liner Assembly	x	x	x	x	x	x	x	x	x	x	x	x
12	650F48-9		Trim Slide		x	x	x	x	x	x	x			x	x
13	650F49-8		Trim Slide Retainer		x	x	x	x	x	x	x			x	x
14	650F52-8		Dogging Assembly Std.		x	x	x	x		x		x		x	
	650F96-8		Dogging Assembly Cyl. Typ. (M52)		x	x	x	x		x		x		x	
15	656F40-8		Dogging Key		x	x	x	x		x		x		x	
16	650F27-9		Dogging Hole Plug (M51)		x	x	x	x	x	x	x	x	x	x	x
17	650F94-2		Cylinder Nut (M52)		x	x	x	x		x		x		x	
18	650F95-5		Cylinder Spacer Sleeve (M52)		x	x	x	x		x		x		x	

* Field Reversible

Device Parts Cross Reference

	Part Number	Specify	Description	ED 5000DB	ED 4200	ED 4400	ED 4800	ED 5200	ED 5200A	ED 5400	ED 5400A	ED 5600	ED 5600A	ED 5800	ED 5800A
21	650F32-8		End Clamp Packet		x	x	x	x		x		x		x	
	650F33-8		End Clamp Packet	x					x		x		x		x
22	650F28-8	622	Screw, Touch Bar Caps		x	x	x	x	x	x	x	x	x	x	x
23	650F34	fin	Screw Packet, Cover	x	x	x	x	x	x	x	x	x	x	x	x
24	650F53-8		Screw, Dogging Assembly		x	x	x	x		x		x		x	
25	220F70-8		Screw, Trim Slide		x	x	x	x	x	x	x			x	x
26	650F51-8		Screw, Latch Head to Carrier		x	x	x	x	x	x	x	x	x	x	x
27	654F20-8		Mounting Packet		x	x	x	x		x		x		x	
28	652F29		Sex Nut Packet		x	x	x	x	x	x	x	x	x	x	x
30	650F29-8		Strike Packet					x							
	650F30-8		Strike Packet						x						
	650F31-8		Strike Packet		x										
31	650F54-8	622	Top Strike Packet			x	x			x	x			x	x
32	650F64		Cover, Top & Bottom Latch			x				x	x				
33	650F55-8		Top Latch			x				x					
	650F56-8		Top Latch								x				
34	650F57-8		Mounting Pack			x				x	x				
35	650F58-8		Bottom Bolt Case			x				x					
	650F59-8		Bottom Bolt Case								x				
	650F74-8		Bottom Bolt Case											x	
	650F75-8		Bottom Bolt Case												x
	650F76-8		Bottom Bolt Case				x								
36	650F60	fin	Top Rod			x				x	x				
	650F80	fin	Top Rod				x							x	x
37	649F99	fin	Bottom Rod & Pin Assembly			x				x	x				
38	650F63	fin	Rod Guide Cover			x				x	x				
39	650F62	fin	Rod Guide Packet			x				x	x				
40	650F97-8		Pillow Block Packet			x									
41	654F21-8		Latch Packet			x				x	x				
42	650F66 thru 70		Mortise Lock Body									x	x		
43	650F06	fin	Armored Front									x	x		
44	429F41	fin	Screw Packet for Armored Front									x	x		
45	650F65-8	622	Strike Packet									x	x		
46	650F77-8		Bottom Bolt Pack				x								
	650F78-8		Bottom Bolt Pack											x	x
47	650F71-8		Top Latch & Bracket Assembly											x	
	650F72-8		Top Latch & Bracket Assembly												x
	650F73-8		Top Latch & Bracket Assembly				x								
49	650F79-8		Bottom Rod & Coupler Assembly				x							x	x
51	650F81-8		Top Rod Tube				x							x	x
52	650F82-8		Rod & Yoke Assembly				x							x	x
53	656F41		Touch Pad Spring		x	x	x	x	x	x	x	x	x	x	x
54	656F66-8		Screw		x	x	x	x	x	x	x	x	x	x	x

Trim Parts Cross Reference

	Part Number	Specify	Description	x710		x750		x755 x759		x7M10		x7M50		x7M55 x7M57		x810		x850		x855 x859	
				Levers	Knobs	Levers	Knobs	Levers	Knobs	Levers	Knobs	Levers	Knobs	Levers	Knobs	Levers	Knobs	Levers	Knobs	Levers	Knobs
1	651F00	fin	Escutcheon																		
	651F01	fin	Escutcheon																		
	651F04	fin	Escutcheon																		
	651F06	fin	Escutcheon																		
	651F08	fin	Escutcheon																		
	651F09	fin	Escutcheon																		
	651F10	fin	Escutcheon																		
	651F11	fin	Escutcheon																		
	651F12	fin	Escutcheon																		
	651F13	fin	Escutcheon	x	x	x	x														
	651F14	fin	Escutcheon					x	x												
	651F15	fin	Escutcheon																		
	651F16	fin	Escutcheon																		
	651F17	fin	Escutcheon																		
	651F18	fin	Escutcheon																		
	651F19	fin	Escutcheon																		
	651F20	fin	Escutcheon																		
	651F21	fin	Escutcheon																		
	651F24	fin	Escutcheon																		
	651F25	fin	Escutcheon																		
	651F26	fin	Escutcheon																		
	651F27	fin	Escutcheon																		
	656F54	fin	Escutcheon								x		x								
	656F55	fin	Escutcheon							x		x									
	656F56	fin	Escutcheon												x						
	656F57	fin	Escutcheon											x							
	656F58	fin	Escutcheon																		x
	656F59	fin	Escutcheon																	x	
	656F60	fin	Escutcheon														x		x		
	656F61	fin	Escutcheon													x		x			
	656F62	fin	Escutcheon																		
	656F63	fin	Escutcheon																		
2	651F34	fin	Operator Thumbpiece																		
	651F35	fin	Operator Thumbpiece																		
	656F53	fin	Operator Thumbturn																		
5	651F42-5		Housing																		
	651F66-5		Housing/Cam Assembly													x	x	x	x		
	651F67-5		Housing/Cam Assembly					x	x												
	651F96-5		Housing/Cam Assembly																	x	x
	651F97-5		Housing																		
6	655F02-8		Screw, Cylinder Mounting					x	x											x	x
7	656F65-8		Screw, Function					x	x											x	x

Trim Parts Cross Reference

	F250	F257	F2M57	F350	F357	F3M57	F450	F457	T1310	T1350	T1355	T1357	T13M10	T13M55	T13M57	O1410	O1455/59	T1410	T1450	T1455/59	T1457
①																					
								x													
																					x
																			x		
																				x	
																		x			
																x	x	x	x	x	x
	x																				
				x						x											
										x											
			x																		
									x												
													x								
																x					
																	x				
②																					
									x		x							x		x	
																x	x				
⑤		x			x			x				x									x
											x										
																	x		x		
																x		x			
⑥		x			x			x			x	x					x			x	x
⑦											x						x			x	

Trim Parts Cross Reference

				x710		x750		x755 x759		x7M10		x7M50		x7M55 x7M57		x810		x850		x855 x859	
	Part Number	Specify	Description	Levers	Knobs	Levers	Knobs	Levers	Knobs	Levers	Knobs	Levers	Knobs	Levers	Knobs	Levers	Knobs	Levers	Knobs	Levers	Knobs
8	651F63-8		Gear/Black Housing Assembly	x	x			x	x												
9	651F50-8		Screw, Tailpiece Plate	x	x			x	x												
10	651F55-8		Tailpiece Assembly																		
	651F71-8		Tailpiece Assembly	x	x			x	x												
	655F69-8		Tailpiece Assembly																		
	655F70-8		Tailpiece Assembly	x	x			x	x												
11	651F64-8		Gear	x				x													
	651F77-8		Gear		x				x												
	655F54-8		Gear			x															
	655F55-8		Gear				x														
12	651F65-5		Hub	x				x													
	656F64		Hub & Pin Assembly		x				x												
13	651F72-8		Hub Bushing	x				x													
14	651F66-8		Cotter Pin	x	x			x	x												
15	651F73-8		Nut, Spindle	x				x													
	652F08-8		Nut, Spindle								x		x		x						
	652F09-8		Nut, Spindle							x		x		x							
16	118F29-9		Thimble Insert, Nylon	x		x		x		x		x		x		x		x		x	
	651F38-9		Thimble Insert, Nylon		x		x		x		x		x		x		x		x		x
17	652F10-8	fin	Screw Packet, Mounting																		
	652F11-8	fin	Screw Packet, Mounting																		
	652F12-8	fin	Screw Packet, Mounting	x	x	x	x	x	x	x	x	x	x	x	x						
	652F13-8	fin	Screw Packet, Mounting	x	x	x	x	x	x	x	x	x	x	x	x						
	652F14-8	fin	Screw Packet, Mounting																		
	652F15-8	fin	Screw Packet, Mounting																		
18	651F61-8		Spring, Return LHR	x				x													
	651F62-8		Spring, Return RHR	x				x													
	651F75-5		Spring, Return		x				x												
19	651F40-8		Spring	x	x			x	x							x	x			x	x
20	651F39-8		Hex Nut	x	x			x	x												
21	651F70-8		Washer under Tailpiece	x	x			x	x												
22	651F78-8		Nut, Spindle Gear		x		x		x												
	651F79-8		Nut, Spindle Gear			x															
23	652F05-8		Spindle Washer							x		x		x							
	652F06-8		Spindle Washer								x		x		x						
24	652F04-8		Spindle Bracket							x		x		x							
	652F07-8		Spindle Bracket -								x		x		x						
25	651F85-8		Cover Plate													x	x	x	x	x	x
26	651F94-8		Spring, Extension													x		x		x	
27	651F92-8		Nut, Spring Post													x		x		x	
28	651F82-8		Rack/Tailpiece Assembly													x	x			x	x
	652F21-8		Rack/Tailpiece Assembly															x	x		

Trim Parts Cross Reference

	F250	F257	F2M57	F350	F357	F3M57	F450	F457	T1310	T1350	T1355	T1357	T13M10	T13M55	T13M57	O1410	O1455/59	T1410	T1450	T1455/59	T1457
8																					
9									x		x										
10									x		x										
									x		x										
11																					
12																					
13																					
14																					
15																					
16																					
																x	x				
17																x	x	x	x	x	x
																x	x	x	x	x	x
	x	x	x																		
	x	x	x																		
				x	x	x			x	x	x	x	x	x	x						
				x	x	x			x	x	x	x	x	x	x						
18																					
19									x		x					x	x	x		x	
20									x		x										
21																					
22																					
23																					
24																					
25																x	x	x		x	
26																					
27																					
28																x	x	x		x	

Trim Parts Cross Reference

	Part Number	Specify	Description	x710		x750		x755 x759		x7M10		x7M50		x7M55 x7M57		x810		x850		x855 x859	
				Levers	Knobs	Levers	Knobs	Levers	Knobs	Levers	Knobs	Levers	Knobs	Levers	Knobs	Levers	Knobs	Levers	Knobs	Levers	Knobs
29	651F53-8		Clutch Lever																	x	x
30	651F83-8		Pin, Clutch Lever																	x	x
31	651F89-8		Retainer, Clutch Lever Pin																	x	x
32	651F88-8		Nut, Cover Plate													x	x	x	x	x	x
33	652F22-8		Hub													x	x	x	x	x	x
34	652F23-9		Bushing, Nylon													x	x	x	x	x	x
35	651F84-8		Washer Grip													x	x	x	x	x	x
36	651F87-8		Screw, Spindle													x	x	x	x	x	x
37	**651F86-8**		**Spring, Rack**														x		x		x
	651F93-8		Spring, Rack													x		x		x	
38	**651F36-2**	**fin**	**Pull, Straight**																		
	651F37-2	fin	Pull, Offset																		
39	651F43-8		Screw Post																		
40	651F44-8		Lock Washer, Screw Post																		
41	**651F47-8**		**Spring, Thumbpiece**																		
	651F59-8		Spring, Thumbpiece																		
42	651F49-8		Slider, Thumbpiece																		
43	651F54-5		Housing, Tailpiece Assembly																		
44	651F41-8		Screw																		
45	651F56-8		Thumbpiece Tab																		
46	651F57-8		Thumbpiece Bracket																		
47	651F60-8		Retaining Ring																		
48	**651F48-8**		**Pin, Thumbpiece**																		
	651F58-7		Pin, Thumbpiece																		
49	**651F28**		**Thimble**		x		x		x												
	652F19		Thimble	x		x		x													
50	651F98-8		Pin, Groove																		

Trim Parts Cross Reference

	F250	F257	F2M57	F350	F357	F3M57	F450	F457	T1310	T1350	T1355	T1357	T13M10	T13M55	T13M57	O1410	O1455/59	T1410	T1450	T1455/59	T1457
29																	x			x	
30																	x			x	
31																	x			x	
32																x	x	x		x	
33																x	x	x		x	
34																x	x	x		x	
35																x	x				
36																x	x				
37																x	x	x		x	
38									x	x	x	x	x	x	x						
																x	x	x	x	x	x
39									x	x	x	x	x	x	x	x	x	x	x	x	x
40									x	x	x	x	x	x	x	x	x	x	x	x	x
41									x		x										
													x	x							
42									x		x										
43									x		x										
44									x	x	x	x	x	x	x						
45												x	x								
46												x	x								
47												x	x								
48									x		x		x								
													x	x							
49																					
50																		x		x	