Corbin Russwin®

ED6000 SERIES EXIT DEVICE PARTS LIST

SERIES	DESCRIPTION	PAGES
ED6200	Rim	2-3
ED6600	Mortise	4-5
ED6400	Vertical Rod	6-7
ED6400A	Vertical Rod, U.L.	8-9
ED6800	Vertical Rod, Concealed	10-12

When ordering Parts, SPECIFY Part Number, Hand (if required), Finish (if part is exposed), Description and Exit Device for which it is required.

EXAMPLE:

286F87	RH	- 612	Lever Sub-Assy.	for ED6200 Exit Device
Part Number	Hand	Finish	Description	Exit Device

EXIT DEVICES – Rim Type

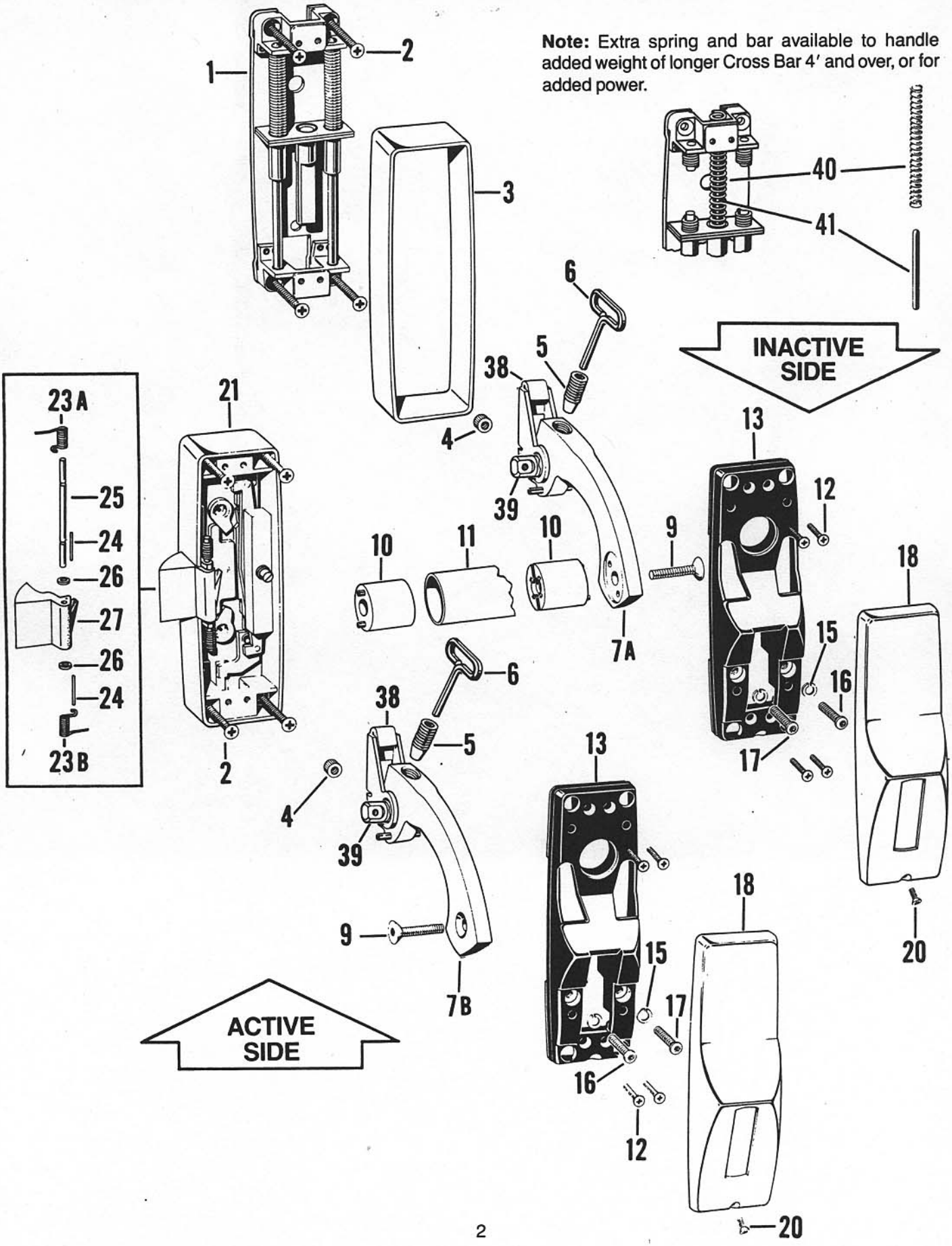

ED6200

FIG. NO.	NAME	PART NO.
1	Backplate Sub Assy	306F20
2	#12-24×2″ FHMS-PH	255F41
3	*Case	*141F84
4	Stop Nut	243F76
5	Dogging Screw	418F28
6	Wrench	123F53
7A	Lever Sub Assy. RH	379F25
7B	Lever Sub Assy. LH	379F26
9	#5/16-24×1½ FHMS-SOC	*261F31
10	Tenon Sub Assy.	378F74
11	Cross Bar 37 11/16 Lg.	*141L59
12	#8-32× ¾ FHMS-PH	261F30
13	Top Casting	464F91
15	Spring Lock Washer	243F79
16,17	#¼-20×¾″ BUHC-SK	434F02
18	Top Cover Sub Assy.	*243F85
20	#8-32×⅜ OHMS-PH	*254F73
21	Active Case Sub Assy.	397F99
23A	Latch Spring RH	187F88-RH
23B	Latch Spring LH	187F89-LH
24	ESNA Roll Pin	228F18
25	Latch Pin	166F34
26	Nylon Washer	164F32
27	Latch	*187F21
38	Lifting Finger	349F06
39	Lever Pivot	433F97-8
40	Slide Spring	147F88
41	Center Rod	306F22

* SPECIFY FINISH FROM CATALOG ON ALL EXPOSED PARTS – ORDER BY PART NAME AND NUMBER.

EXIT DEVICES – Mortise Type

Note: Extra spring (21) and bar available to handle added weight of longer Cross Bar 4′ and over, or for added power.

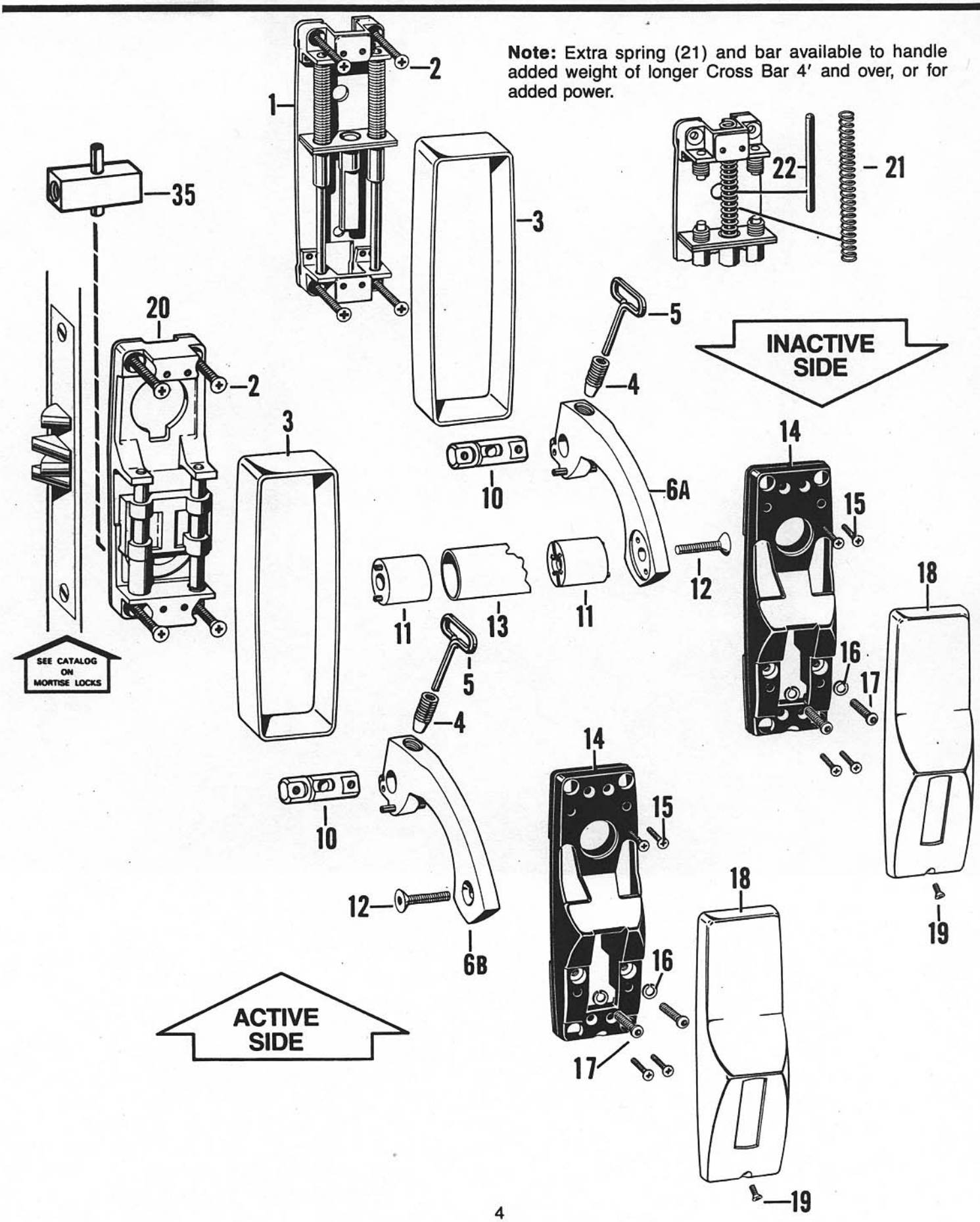

ED6600

FIG. NO.	NAME	PART NO.
1	Backplate Sub Assy. (Inactive)	306F20
2	#12-24×2″ FHMS-PH	255F41
3	Case	*141F84
4	Dogging Screw	418F28
5	Wrench	123F53
6A	Lever Sub Assy. R.H.	*379F25
6B	Lever Sub Assy. L.H.	*379F26
10	Lever Pivot	433F97-8
11	Tenon Sub Assy.	378F74
12	#5/16-24×1½ FHMS-SOC.	*261F31
13	Cross Bar 37 11/16 Lg	*141L59
14	Top Casting	464F91
15	#8-32×¾ FHMS-PH	261F30
16	Spring Lock Washer	243F79
17	3¼-20×¾″ BUHC-SK	434F02
18	Top Cover Sub Assy.	*243F85
19	#8-32×⅜ OHMS-PH	*254F73
20	Backplate Sub Assy. (Active)	382F98
21	Slide Spring	147F88
22	Center Rod	306F22
35	Spindle Sub Assy. for 1¾ doors only. (Specify for other door thickness.)	370F63

* SPECIFY FINISH FROM CATALOG ON ALL EXPOSED PARTS –
ORDER BY PART NAME AND NUMBER.

PANIC EXIT DEVICES – Vertical Rod Type

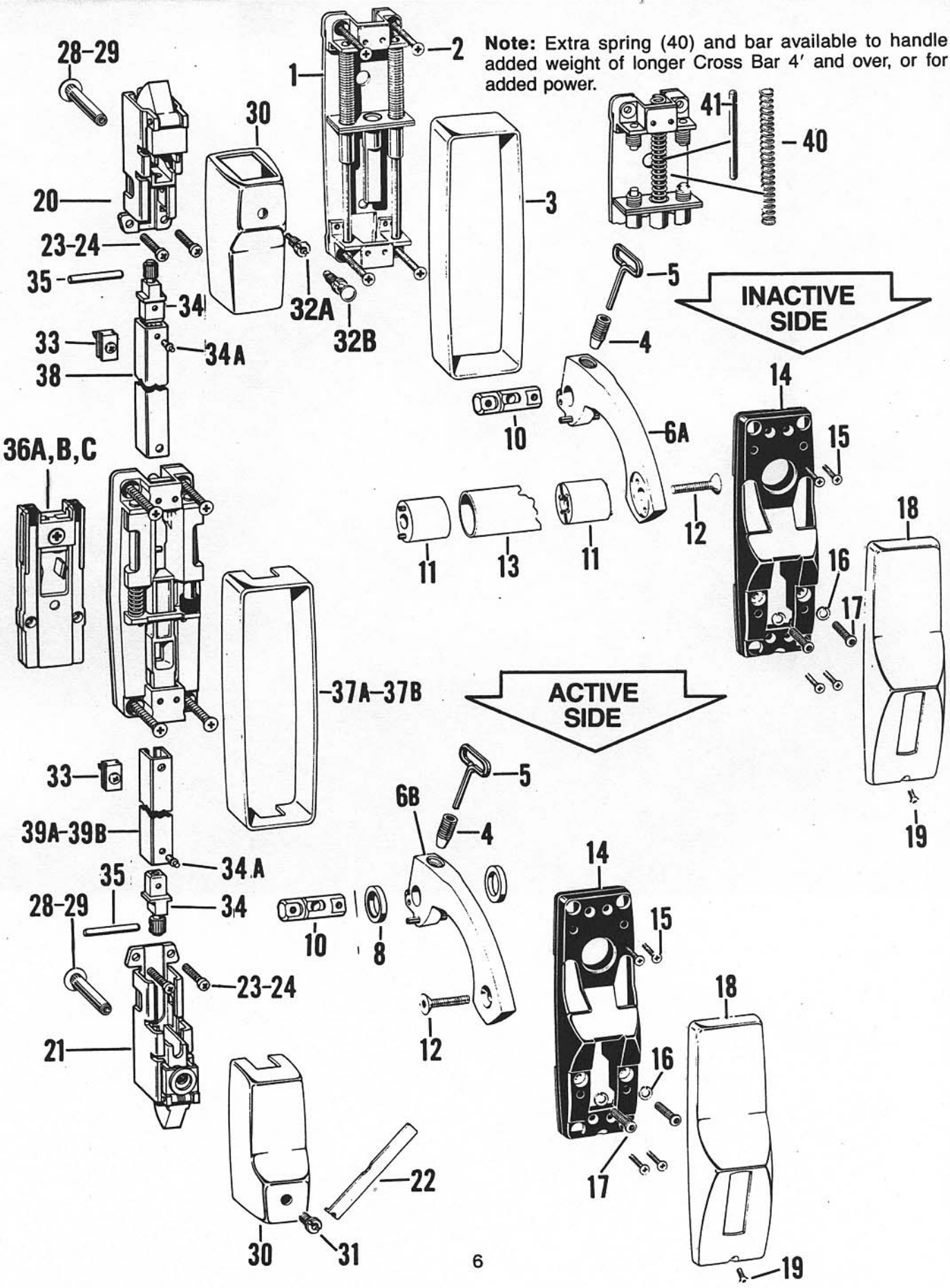

ED6400

FIG. NO.	NAME	PART NO.
1	Backplate Sub Assy. (Inactive)	306F20
2	#12-24×2″ FHMS-PH	220F72
3	Case (Inactive)	*141F84
4	Dogging Screw	418F28
5	Wrench	123F53
6A	Lever Sub Assy. R.H.	379F25
6B	Level Sub Assy. L.H.	379F26
8	Washer (White Nylon)	147F84
10	Lever Pivot	433F98-8
11	Tenon Sub Assy.	378F74
12	#5/16-24×1½ FHMS-SOC.	*261F31
13	Cross Bar 37 11/16 Lg	*141L59
14	Top Casting	434F26
15	#8-32×¾ FHMS-PH	261F30
16	Spring Lock Washer	243F79
17	#¼-20×¾″ BUHC-SK	434F02
18	Top Cover Sub Assy.	*243F85
19	#8-32×⅜ OHMS-PH	*254F73
20	Top Latch Sub Assy.	392F02
21	Bottom Latch Sub Assy.	392F11
22	Wrench, Mounting	148F44
23	#12-24×⅞ RHMS-PH (Metal Doors)	264F95
24	Flat Head Screw for Wood and Kalamein Doors	318F59
28	Sex Nut (For 1¾″ & 2″ Doors)	81F97
29	Sex Nut (For 2 ¼″ & 2½″ Doors)	207F69
30	Case Cover	398F89-2
31	Retaining Screw	148F17
32A	Plunger Sub Assy. Release	391F99
32B	Plunger Sub Assy. Release	148F36

FIG. NO.	NAME	PART NO.
33	Rod Guide Sub Assy.	392F27
34	Rod Connector Sub Assy.	351F98
34A	Rivet	352F02
35	Pin	148F22
•36	Cassette Sub Assy.	A382F91 B382F92 C382F93
37A	Case (Active)	*141F84
37B	Case (Active—No Bottom Rod)	*141F86
38	Top Rod Sub Assy. (Standard)	*393L14x652
39A	Adj Bottom Rod (For Flush Strike Only)	*392L20x547
39B	Adj Bottom Rod (For Regular Strikes)	*392L20x563
40	Slide Spring	147F88
41	Center Rod	306F22

VERTICAL ROD STRIKES

(Includes Screws For Wood And Metal Doors)

(FREE LATCHING)

(HOLD–OPEN)

ADJUSTABLE TOP STRIKE
Part No. 392F22

ADJUSTABLE TOP STRIKE
Part No. 392F24

TOP STRIKE BRACKET
Part No. 176F65
349/752FL

BOTTOM FLUSH STRIKE
Part No. 392F28

BOTTOM STRIKE
Part No. 502F96

CASSETTE ASSEMBLY

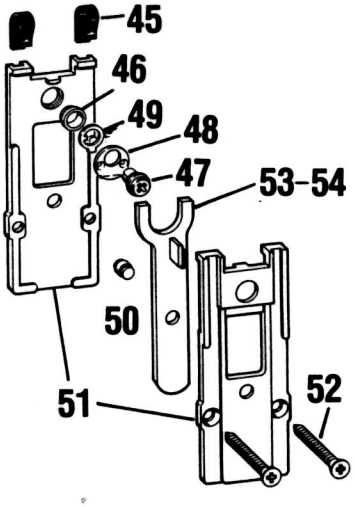

FIG. NO.	NAME	PART NO.	•CASSETTE NO.		
			382F91	382F92	382F93
45	Clip	382F79	8	8	8
46	Bushing	382F80	8	8	8
47	Driver, Cam	382F81	8	—	8
		382F82	—	8	—
48	Cam	147F87	8	8	8
49	Cam, Lazy	147F83	8	8	8
50	Pivot	382F85	—	—	8
51	Case-Half	382F86	5	5	5
52	Screw, Sems Assy.	382F89	8	8	8
53	Lever Sub Assy.	382F87	8	8	8
54		382F88	—	—	8

•Cassette operation:

382F91—By knob, lever or thumb piece except when locked by key.
382F92—Knob, lever or thumb piece automatically locked when key is removed.
382F93—No outside operation, latch hold-back by key.

*SPECIFY FINISH FROM CATALOG ON ALL EXPOSED PARTS – ORDER BY PART NAME AND NUMBER.

FIRE EXIT DEVICES – Vertical Rod Type

Underwriters' Laboratories Listed

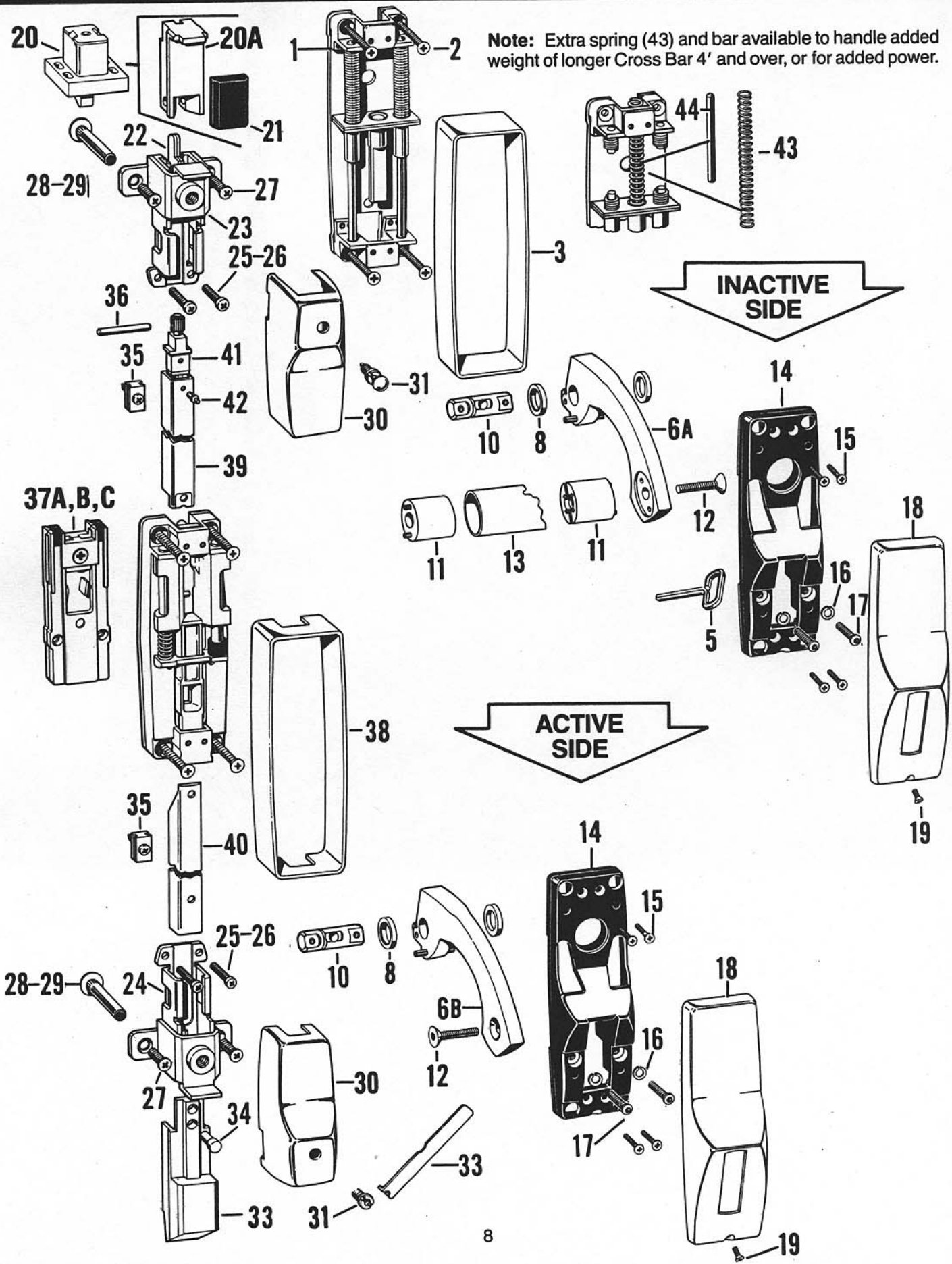

Note: Extra spring (43) and bar available to handle added weight of longer Cross Bar 4′ and over, or for added power.

ED6400A

FIG. NO.	NAME	PART NO.
1	Backplate Sub Assy. (Inactive)	306F20
2	#12-24x2" FHMS-PH	255F41
3	Case (Inactive)	*141F84
5	Wrench	123F53
6A	Lever Sub Assy. R.H.	286F91
6B	Lever Sub Assy. L.H.	286F92
8	Washer (White Nylon)	147F84
10	Lever Pivot	433F98-8
11	Tenon Sub Assy.	378F74
12	#5/16-24x1½ FHMS-SOC.	*261F31
13	Cross Bar 37 11/16 Lg	*141L59
14	Top Casting	464F91
15	#8-32x¾ FHMS-PH	261F30
16	Spring Lock Washer	243F79
17	#¼-20x¾" BUHC-SK	434F02
18	Top Cover Sub Assy.	*243F85
19	#8-32x⅜ OHMS-PH	*254F73
20	Top Latch Sub Assy.	399F06
20A	Top Pusher Sub Assy.	398F99
21	Bumper	398F91
22	Trip	398F95
23	Frame & Bridge Sub Assy.	399F10
24	Bottom Latch Sub Assy.	399F13

FIG. NO.	NAME	PART NO.
25	#12-24x⅞-OHU-MS-PH (For 1¾" & 2" Doors)	*304F65
26	#12-24x1⅛"-OHU-MS-PH (For 2¼" Doors)	*304F66
27	Screw (Metal Doors)	220F84
28	Sex Nut (For 1¾" & 2" Doors)	*207F69
29	Sex Nut (For 2¼" Doors)	*551F14
30	Case Cover	399F01
31	Retaining Screw	148F17
32	Wrench, Mounting	148F44
33	Bottom Bolt	399F07
34	Connecting Pin	398F94
35	Rod Guide Sub Assy.	392F27
36	Pin	148F22
•37	Cassette Sub Assy.	A382F91 B382F92 C382F93
38	Case (Active)	141F86
39	Top Rod	*393L14x672
40	Bottom Rod	*399L11x563
41	Rod Connector Sub Assy.	351F98
42	Rivet	352F02
43	Slide Spring	147F88
44	Center Rod	306F22

VERTICAL ROD STRIKES

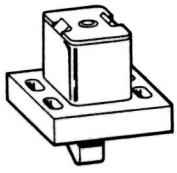

TOP LATCH ASSY.
Part No. *399F06
(Screws Not Included)
Order as Follows:
(4) 12—24x¾ FRHMS-PH
305F07

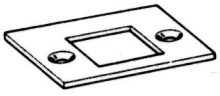

BOTTOM FLUSH STRIKE
Part No. 502F75

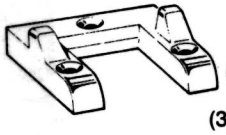

BOTTOM THRESHOLD STRIKE
Part No. *304F34
(Screws Not Included)
Order As Follows:
(3) ¼—20x1¾ FHMS-PH
220F82

CASSETTE ASSEMBLY

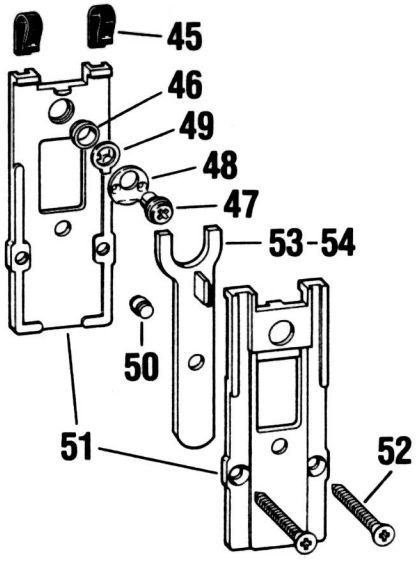

FIG. NO.	NAME	PART NO.	•CASSETTE NO.		
			382F91	382F92	382F93
45	Clip	382F79	8	8	8
46	Bushing	382F80	8	8	8
47	Driver, Cam	382F81	8	—	8
		382F82	—	8	—
48	Cam	147F87	8	8	8
49	Cam, Lazy	147F83	8	8	8
50	Pivot	382F85	—	—	8
51	Case-Half	382F86	5	5	5
52	Screw, Sems Assy.	382F89	8	8	8
53	Lever Sub Assy.	382F87	8	8	8
54		382F88	—	—	8

•Cassette operation:
382F91—By knob, lever or thumb piece except when locked by key.
382F92—Knob, lever or thumb piece automatically locked when key is removed.
382F93—No outside operation, latch hold-back by key.

*SPECIFY FINISH FROM CATALOG ON ALL EXPOSED PARTS–ORDER BY PART NAME AND NUMBER.

EXIT DEVICES – Concealed Type

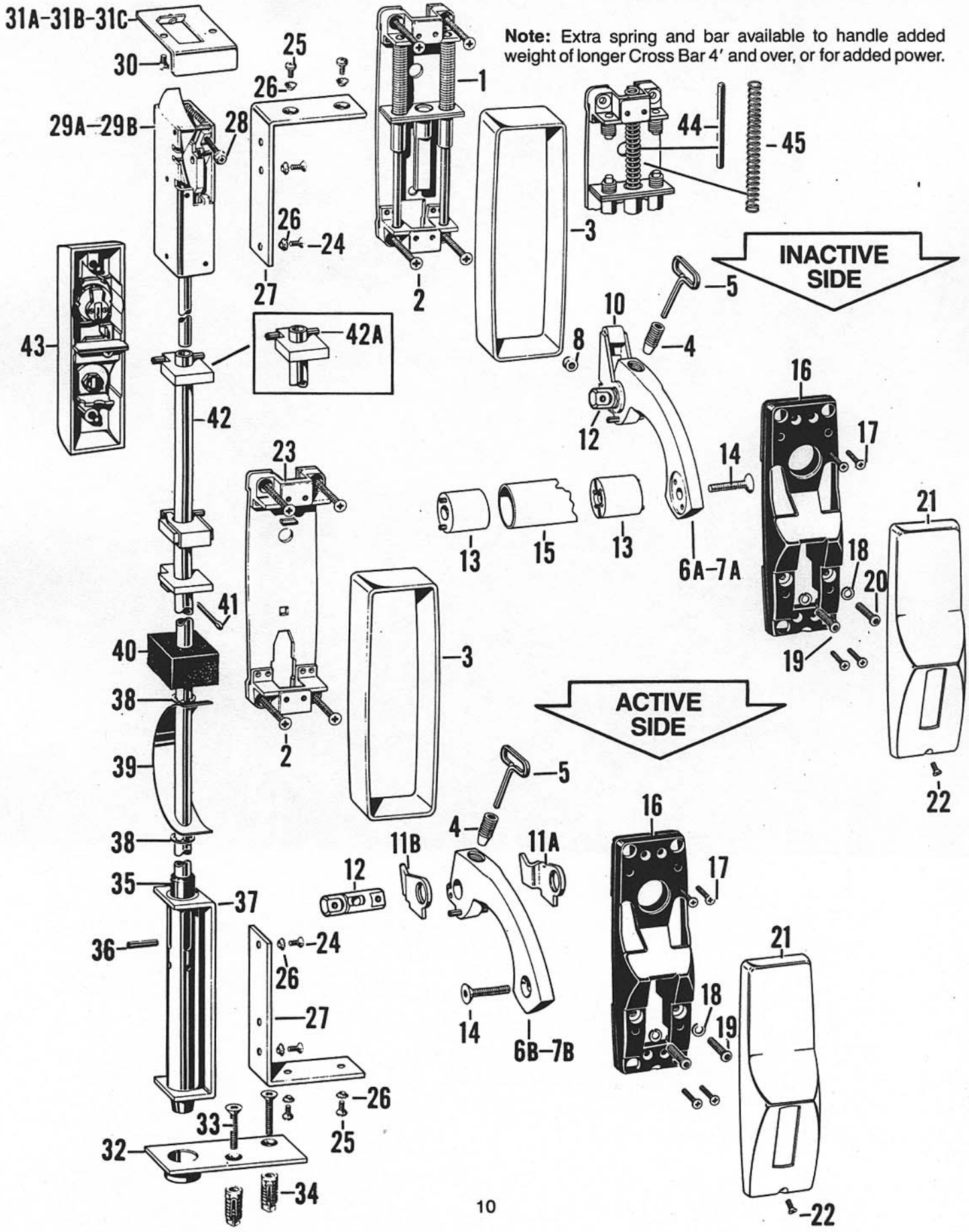

Note: Extra spring and bar available to handle added weight of longer Cross Bar 4′ and over, or for added power.

ED6800

FIG. NO.	NAME	PART NO.
1	Backplate Sub Assy. (Inactive)	306F20
2	#12—24x1¼ FHMS-PH	220F84
3	Case	*141F84
4	Dogging Screw	418F28
5	Wrench	123F53
With Dogging Screw		
6A	Lever Sub Assy. R.H. (Inactive)	379F26
7A	Lever Sub Assy. L.H. (Inactive)	379F25
6B	Lever Sub Assy. R.H. (Active)	379F25
7B	Lever Sub Assy. L.H. (Active)	379F26
No Dogging Screw		
6A	Lever Sub Assy. R.H. (Inactive)	*286F92
7A	Lever Sub Assy. L.H. (Inactive)	*286F91
6B	Lever Sub Assy. R.H. (Active)	*286F91
7B	Lever Sub Assy. L.H. (Active)	*286F92
8	Stop Nut (Nylon)	243F76
10	Lifting Finger (Inactive Case)	349F06
11A	Lifting Finger (Active Case R.H.)	284F78
11B	Lifting Finger (Active Case L.H.)	284F79
12	Lever Pivot	433F97-8
13	Tenon Sub Assy.	378F74
14	#5/16—24x1½ FHMS-SOC	*261F31
15	Cross Bar 37 11/16 LG.	*141L59
16	Top Casting	464F91
17	#8—32x¾ FHMS-PH	261F30
18	Spring Lock Washer	243F79
19, 20	#1/4–20 x 3/4" BUHC–SK	434F02
21	Top Cover Sub Assy.	*243F85
22	#8–32 x 3/8" OHMS–PH	*254F73
23	Backplate Sub Assy. (Active)	382F63
24	#10–32 x 1/4" FHUMS–PH	269F01
**25	#10–32 x 1/4" OHMS–PH	*269F09
26	Lock Washer	269F05
27	Mounting Bracket	122F18
28	#10–32 x 1 1/4" THMS–PH	282F35
29A	Top Latch Sub Assy. (Includes Top Rod For Door Heights 6'–4" To 8'–6")	183F74
	NOTE: For Top Rod Only (For Door Heights 6'–4" To 8'–6")	122F07

*SPECIFY FINISH FROM CATALOG ON ALL EXPOSED PARTS – ORDER BY PART NAME AND NUMBER.

FIG. NO.	NAME	PART NO.
29B	Top Latch Sub Assy. (Includes Top Rod For Door Heights 8'-6" To 10'-8")	183F75
	NOTE: For Top Rod Only (For Door Heights 8'-6" To 10'-8")	155F03
30	#8—32x⅜ FHUMS-PH	*269F08
31A	Top Strike Sub Assy. (Regular)	*183F85
31B	Top Strike Sub Assy. (Reveal Depth Under 5½")	*213F11
31C	Top Strike Sub Assy. (Reveal Depth 5½" To 8")	*213F10
32	Bottom Strike	*123F22
33	¼—20x⅝ FHMS-PH	*220F75
34	Anchor	361F30
35	Lower Bolt Tube Sub Assy.	122F50
36	Roll Pin (#79-040-187-09 37)	228F81
37	Bottom Guide Sub Assy.	399F18
38	Retainer Ring	268F87
39	Lower Rod Guide	122F41
40	Sound Deadener	129F49
41	Cotter Pin	269F04
42	Lower Rod Sub Assy. and Parts	399F18
42A	Roll Pin	228F84
43		

NOTE: SEE PAGE 12 FOR INDIVIDUAL PARTS ON OUTSIDE OPERATORS

44	Center Rod	306F22
45	Slide Spring	147F88

**ALSO USED FOR SURFACE MOUNTING–2 EACH FOR TOP LATCH AND BOTTOM BOLT

PARTS FOR OUTSIDE OPERATORS

REGULAR OPERATOR

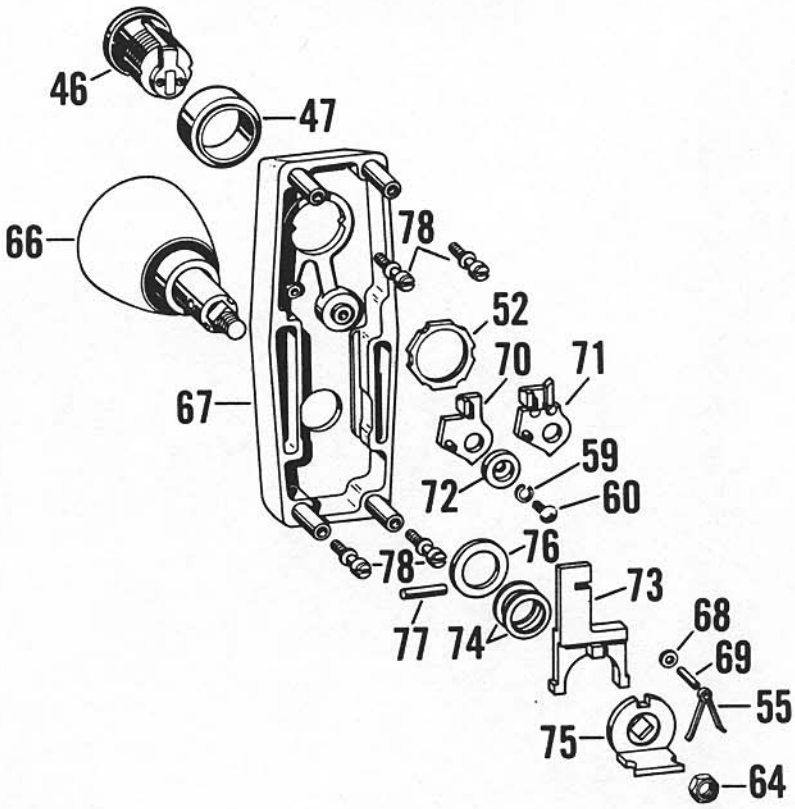

FIG. NO.	NAME	PART NO.
46	1 1/8" Mortise Cylinder Straight Cam	As cataloged
47	Cylinder Collar	*134F05
52	Hex Nut	129F84
55	Spring Locking Lever	122F59
59	#10 Light Spring Washer	306F07
60	#10–24 x 5/16" RHMS–PH	306F06
64	Jam Nut	184F94
66	865/Belmont Knob Sub Ass'y	406F33
67	Case	
68	Nyliner	269F47

FIG. NO.	NAME	PART NO.
69	Rollpin	228F52
70	Locking Lever Sub Ass'y	364F28
71	Locking Lever Sub Ass'y	364F29
72	Washer	364F22
73	Locking Slide	364F27
74	(2) Washer	31F64
75	Lifting Lever	364F30
76	Washer	399F58
77	Pin	262F14
78	(4) Screw	120F55

*SPECIFY FINISH FROM CATALOG ON ALL EXPOSED PARTS – ORDER BY PART NAME AND NUMBER.

Corbin Russwin®

For more information regarding Corbin Russwin Locksets, Exit Devices, Door Controls and Key Systems, contact your authorized Corbin Russwin Distributor or Sales Representative.

In U.S.:
Corbin Russwin Architectural Hardware
1902 Airport Road
Monroe, NC 28110
Phone 800-543-3658
Fax 800-447-6714
www.corbin-russwin.com

In Canada:
Yale-Corbin Canada Ltd.
6940 Edwards Boulevard
Mississauga, ONT L5T 2W2
Phone 800-461-3007
Fax 800-461-8989
www.yalecorbin.on.ca

The ASSA ABLOY Group is the world's leading manufacturer and supplier of locks and associated products, dedicated to satisfying end-user needs for security, safety and convenience.

Corbin Russwin and Design® is a registered trademark of Corbin Russwin, Inc. Pyramid and Design™ is a trademark of Corbin Russwin, Inc. These materials are protected under US copyright laws. All contents current at time of publication. Corbin Russwin, Inc. reserves the right to change availability of any item in this catalog, its design, construction, and/or its materials.