Corbin Russwin®

Pushpad Exit Devices Parts Manual

ED8000 Series

An ASSA ABLOY Group company

ASSA ABLOY

Table of Contents

ED8200A Rim Exit Device 4
ED8200(B) Rim Exit Device. 6
ED8400A Surface Vertical Rod Exit Device 8
ED8400 Surface Vertical Rod Exit Device 10
A6, N6 and PR6 Trim 13
G10 Series Trim 14
F150 and F157 Trim 15
P850 and P857 Series Trim. 16
P150 and P157 Trim 17
P250 and P257 Trim 18
Lever Designs 19
Shim Kits 20
Mullions 21
Cylinders. 22
Strikes 23

Finish Guide

BHMA 605	Bright Brass (US3)
BHMA 606	Satin Brass (US4)
BHMA 611	Bright Bronze (US9)
BHMA 612	Satin Bronze (US10)
BHMA 613	Dark Oxidized Satin Bronze, oil rubbed (US10B)
BHMA 618	Bright Nickel Plated (US14) (matches US32)
BHMA 619	Satin Nickel Plated (US15) (matches US32D)
BHMA 622	Flat Black Coated (US19)
BHMA 625	Bright Chromium Plated (US26)
BHMA 626	Satin Chromium Plated (US26D)
BHMA 629	Bright Stainless Steel (US32)
BHMA 630	Satin Stainless Steel (US32D)
BHMA 600	Primed for Painting (USP)
BHMA 689	Silver Aluminum Painted (LBL)
BHMA 690	Dark Bronze Painted (LBL)
BHMA 691	Light Bronze Painted (DBL)
BHMA 693	Black Painted (FBL)
BHMA 696	Satin Brass Painted (GBL)

- All fire-rated components must be used only on fire-rated exit devices. Doing otherwise would violate any type of product labeling or listing. Any component bearing the UL mark for fire-rating cannot be supplied. (Reference items with (UL) symbol.)
- Machine screws are provided for steel reinforced doors. In addition, sex nuts and bolts provided for fire-rated devices and wood door fasteners are provided for wood door applications. It is recommended that sex nuts and bolts be used for all exit device applications. This will improve the performance and extend the life of the product.
- In order to simplify the ordering procedure and maintain regulatory compliance, parts are only available as listed.
- For various special applications, optional parts are shaded on parts lists and diagrams.
- Refer to the installation instructions for complete installation.
- Drawings of parts are not to scale.

How to Order Parts

To order parts, provide the appropriate quantity, part number, finish, hand (when required) and description as directed and illustrated below.

For example, to order ten front covers for an ED8200 Series Exit Device in 689 finish, use the following configuration:

Quantity	Part Number	Finish	Hand	Description
10	385F545	689		Front Cover

How to Order Product Catalog

The ED8000 has a product catalog which can be requested from your local sales representative. Please request catalog #45075.

For assistance from Customer Support or
Technical Product Support, contact:

Corbin Russwin Architectural Hardware
1902 Airport Road, Monroe, NC 28110
Phone 800-543-3658 Fax 800-447-6714

ED8200A Fire-Rated Rim

ITEM	PART NO.	SPECIFY	DESCRIPTION
1			Bar SA
	387F638	FIN	for 30” door width
	387F668	FIN	for 36” door width
	387F698	FIN	for 42” door width
	387F728	FIN	for 48” door width
2	552F416	622	Latch Assembly
3	436F858		Latch Assembly Screw
5	564F115	FIN	Front Cover
6	N/A		Rear Cover UL
9	564F128	FIN	Screw Packet, containing: (A) 2 - #12 - 24 x 3/4” Screws, PHM-PH (B) 2 - Lock Washer (C) 1 - Rear Plate (D) 4 - Sex Nut (E) 1 - Bracket Insert (F) 1 - Front Bar Insert (G1) 2 - Sem’s Screw Assembly (G2) 2 - Sem’s Screw Assembly (H) 6 - #12-24 x 7/8” Screws, FHM-PH
11	518F067	622	Strike Packet; containing (J) 1 - UL Strike (H) 4 - #12-24 x 7/8” screw, FHM-PH
12	519F228	622	Shim for Option M59 (Used on door with 1/2” stop)
13	557F938	FIN	Shim for Option M58 (Not Shown)
14	650F299		Hole Plug

Note: Packets may contain component parts required for a variety of applications

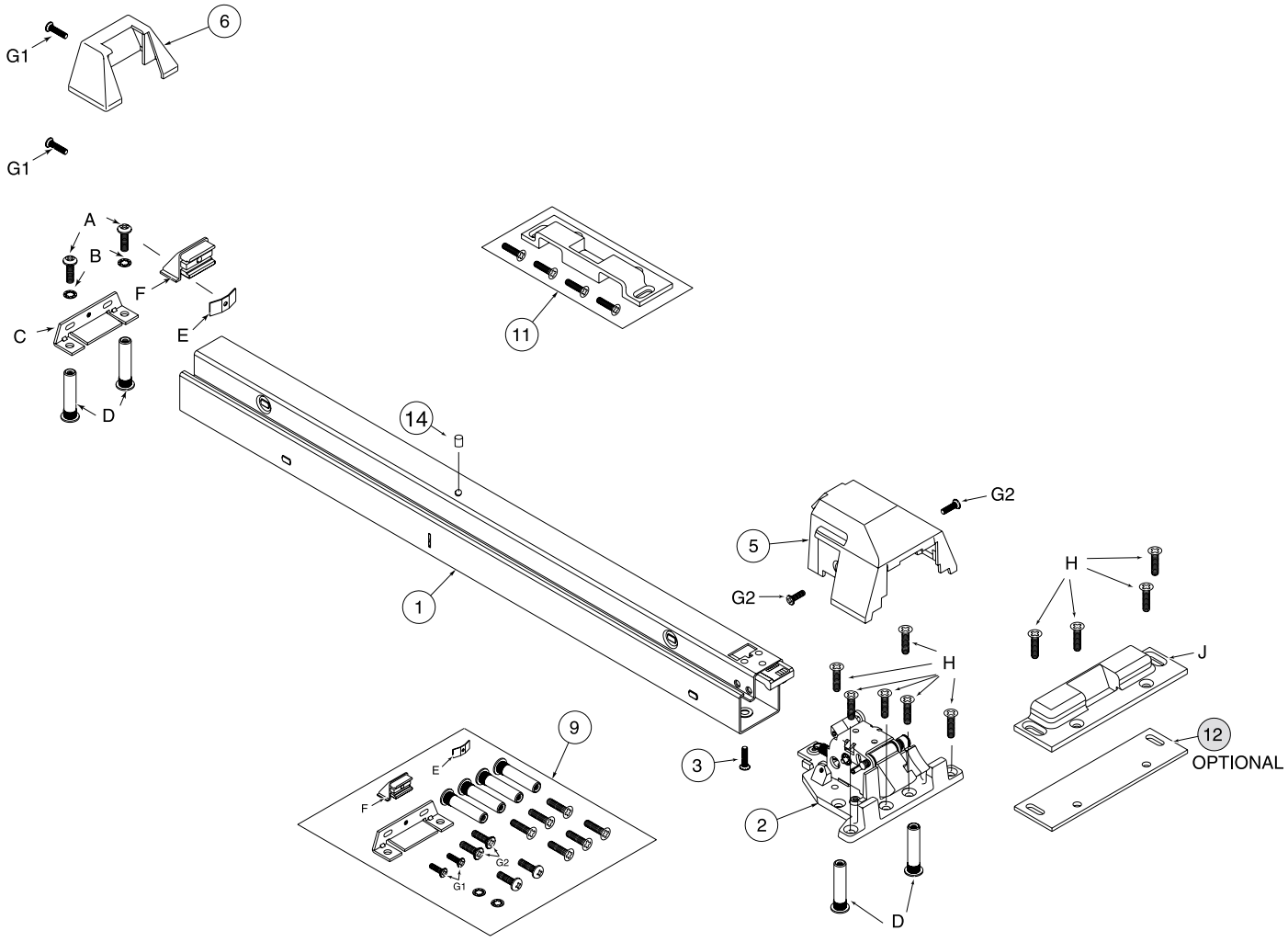
6
G1
G1
A
B
F
C
E
D
11
14
1
G2
5
G2
H
H
J
9
E
F
G2
G1
3
2
12
OPTIONAL
D

ED8200(B) Rim

ITEM	PART NO.	SPECIFY	DESCRIPTION
1			Bar Sub Assembly
	387F218	FIN	for 30” door width
	387F248	FIN	for 36” door width
	387F278	FIN	for 42” door width
	387F308	FIN	for 48” door width
			Bar Sub Assembly - Less Dogging
	387F638	FIN	for 30” door width
	387F668	FIN	for 36” door width
	387F698	FIN	for 42” door width
	387F728	FIN	for 48” door width
2	650F279		Hole Plug (Use on Less Dogging Bar SA)
3	552F368	626	Latch Assembly
4	436F858		Latch Assembly Screw
5	385F545	FIN	Front Cover
6	N/A		Rear Cover UL
8a	449F828	FIN	Screw Packet for Mounting Bar & Active Case; containing: (A) 4 - PHM-PH 12-24 x 3/4" 4 - PHT-A-PH 12 x 1 1/4" (Not Shown - For Wood Door Application) (B) 4 - Lock Washer (C) 1 - Rear Plate (E) 1 - Insert Bracket (F) 1 - Front Bar Insert (G1) 2 - FHM-PH 8-32 x 1" (G2) 2 - FHM-PH 8-32 x 1/2" (L) 1 - Wrench
8b	523F038	FIN	Screw Packet for Mounting Bar & Active Case (ED8200B); containing: (A) 4 - PHM-PH 12-24 x 3/4" (B) 4 - Lock Washer (C) 1 - Rear Plate (D) 4 - Sex Nut (E) 1 - Insert Bracket (F) 1 - Front Bar Insert (G1) 2 - FHM-PH 8-32 x 1" (G2) 2 - FHM-PH 8-32 x 1/2"
9	697F988	FIN	Sex Nut Packet (for Option M54)
10a	386F453	FIN	Strike Packet; containing: (A) 2 - #12-24 x 3/4" Phillips Pan Head Machine Screws (Metal Door) 2 - #12 x 1-1/4" Phillips Pan Head, Type A Tapping Screws (Wood Door) (J) 1 - Strike (K) 2 - #12 External Tooth Lock Washers
10b	468F305	FIN	Strike Packet for Option S02 (Rim x vertical rod for pair of doors); containing: 1 - Strike for Pair of Doors 3 - #12 Phillips Flat Head Undercut Combination Screws
11	391F575	FIN	Shim for option M59 (used on door with 1/2" stop)
12	468F628	FIN	CECO Rim Pack

Note: Packets may contain component parts required for a variety of applications.

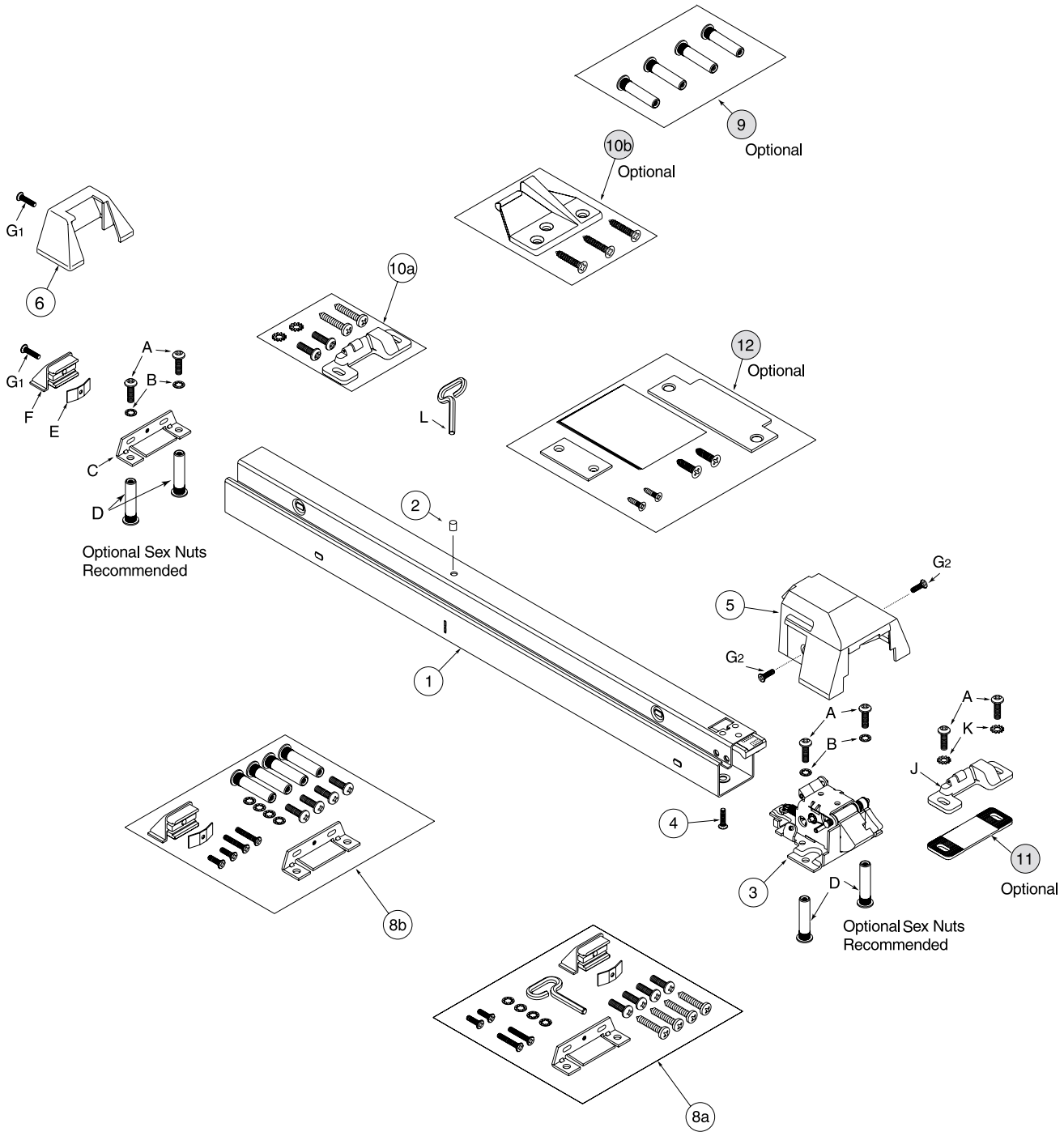
9
Optional
10b
Optional
G1
6
10a
12
Optional
A
B
G1
F
E
L
C
D
Optional Sex Nuts
Recommended
2
G2
5
G2
1
A
B
A
K
J
4
11
Optional
3
D
Optional Sex Nuts
Recommended
8b
8a

ED8400A Fire-Rated Surface Vertical Rod

ITEM	PART NO.	SPECIFY	DESCRIPTION
1			Bar SA
	564F378	FIN	for 30” door width
	564F408	FIN	for 36” door width
	564F438	FIN	for 42” door width
	564F468	FIN	for 48” door width
2	552F468	FIN	Frame Plate Assembly - RHR
	552F478	FIN	Frame Plate Assembly - LHR
3	436F858		Frame Plate Assembly Screw
5	564F345	FIN	Front Cover
6	N/A		Rear Cover UL
10a	523F038	FIN	Screw Packet for Mounting Frame Plate Assy & Bar Assy, containing: (A) 4 - #12 - 24 x 3/4” Screws, PHM-PH (B) 4 - Lock Washer (C) 1 - Rear Plate (E) 1 - Bracket Insert (F) 1 - Front Bar Insert (G1) 2 - Sem's Ass'y Screw (G2) 2 - Sem's Ass'y Screw (Q) 4 - Sex Nut
10b	534F008	FIN	Screw Packet for Top & Bottom Latches, containing: (L) 1 - Top Rod Connector Assembly (M) 1 - Drive Rivet (Q) 4 - Sex Nut (P) 4 - #12 - 24 x 3/4” Screws, PHM-PH (R) 2 - Retaining Ring (V) 4 - Sems Screw Assembly
11	526F321	FIN	Latch Cover
12	525F998		Top Latch Assembly
13	526L928759	FIN	Top Rod Assembly
14	526L518540	FIN	Bottom Rod Assembly
15	526F168		Bottom Latch Assembly
16	446F208	FIN	Rod Guide Packet, containing: (Y) 2 - #8 x 3/4” Screw, RHT-A-PH (Z) 1 - Rod Guide
17	526F527	622	Top Strike Packet, containing: (S) 1 - Top Strike (T) 2 - #12-24 x 3/4” Screw, PHM-PH (U) 1 - #12-24 x 7/8” Screw, FHM-PH
18	526F533	622	Bottom Strike Packet, containing: (J) 2 - 1/4-20 x 5/8” Screw, FHM-PH (K) 2 - Anchor (W) 1 - Bottom Strike
19	557F958	FIN	Shim for Option M58 (not shown)

ED8400A Fire-Rated Surface Vertical Rod

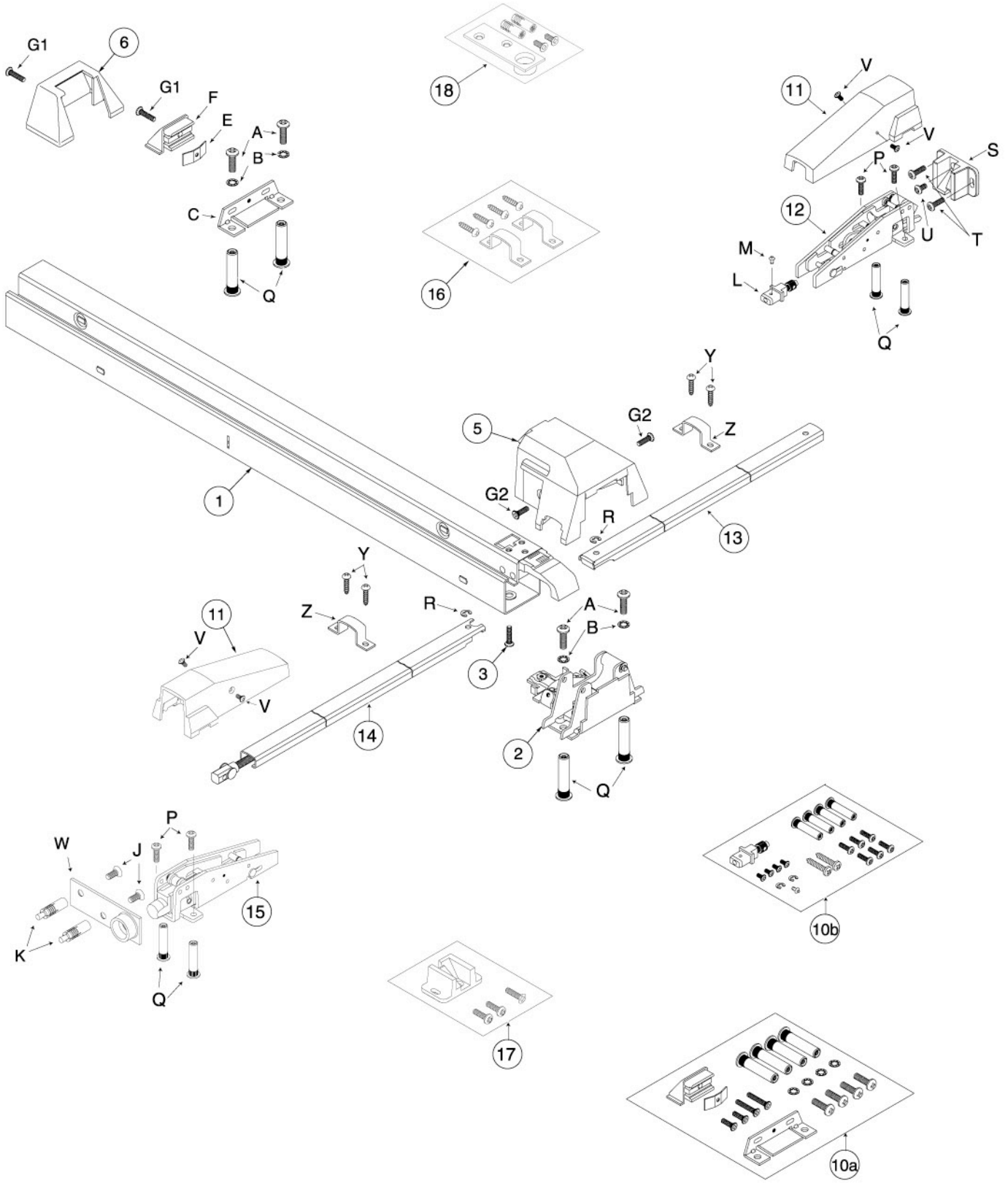

ED8400 Surface Vertical Rod

ITEM	PART NO.	SPECIFY	DESCRIPTION
1			Bar SA
	436F418	FIN	for 30” door width
	436F428	FIN	for 36” door width
	436F438	FIN	for 42” door width
	436F448	FIN	for 48” door width
			Bar SA - Less Dogging
	564F888	FIN	for 30” door width
	564F898	FIN	for 36” door width
	564F908	FIN	for 42” door width
	564F918	FIN	for 48” door width
2			Vertical Rod Frame Plate
	552F598	FIN	RHR
	552F608	FIN	LHR
3	436F858		Frame Plate Assembly Screw
4	436F065	FIN	Front Cover
	446F115	FIN	RHR (M55 Option)
	446F125	FIN	LHR (M55 Option)
5	603F641	FIN	Rear Cover
6a	449F828	FIN	Screw Packet for Mounting Bar & Active Case; containing:
			(A) 4 - #12-24 x 3/4” Phillips Pan Head Machine Screws (Metal Door)
			4 - #12 x 1 1/4” Phillips Pan Head, Type A Tapping Screws (Wood Door)
			(B) 4 - #12 Internal Tooth Lock Washers
			(C) 1 - Rear Plate
			(E) 1 - Bracket Insert
			(F) 1 - Front Bar Insert
			(G1) 2 - Screws with Attached Washers
			(G2) 2 - Screws with Attached Washers
			(I) 1 - Dogging Key
6b	697F988	FIN	Sex Nut Packet for Option (M54) Containing 4 Sex Nuts
9			Top Rod - 40 5/16” Pushbar Height
	487L048697	FIN	for Door 7’6” high
	487M048589	FIN	for Door 7’6” high to 10’ high
10	436F258		Top Latch
11	484F208	FIN	Top Latch Screw Packet Containing:
			(L) 1 - Rod Connector
			(M) 1 - Drive Rivet
			(N) 1 - Pin
			(O) 1 - 1/4 - 20 x 3/4” Phillips Binding Head Undercut Machine Screw (Metal Door)
			1 - #14 x 3/4” Phillips Pan Head Wood Screw (Wood Door)
			(P) 1 - 1/4 - 20 x 1 7/8” Phillips Oval Head Machine Screw (Metal Door)
			1 - #14 x 2 1/4” Phillips Oval Head Wood Screw (Wood Door)
			(Q) 2 - 1/4 - 20 Sex Nuts
			(R) 2 - E Rings

(continued on Page 12)

Note: Packets may contain component parts required for a variety of applications

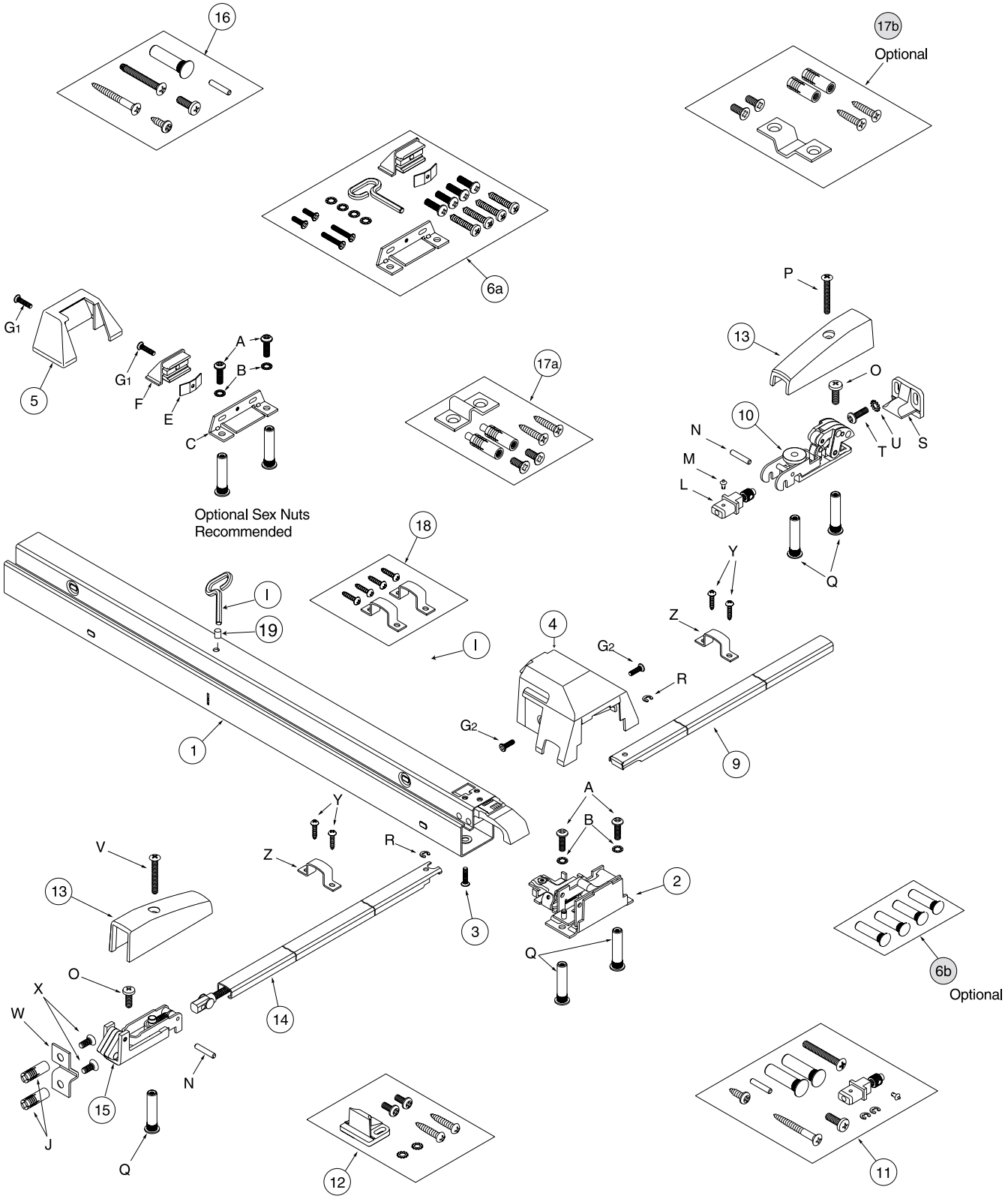
16
17b
Optional
6a
P
G1
13
A
B
17a
O
G1
5
F
E
C
10
N
T
U
S
M
L
Optional Sex Nuts
Recommended
18
Y
Q
I
19
Z
4
I
G2
R
G2
1
9
A
Y
B
R
V
Z
2
13
3
Q
6b
Optional
O
X
W
14
N
15
J
Q
12
11

ITEM	PART NO.	SPECIFY	DESCRIPTION
12	446F213	FIN	Top Latch Strike Packet; containing: (S) 1 - Top Strike (T) 2 - #12 - 24 x 1/2” Phillips Pan Head Machine Screws (Metal Door) 2 - #12-24 x 1 1/4” Phillips Round Head Wood Screws (U) 2 - #12 External Tooth Washers
13	446F231	FIN	Latch Cover (Top or Bottom)
14	436L328557	FIN	Bottom Rod - 40 5/16” Pushbar Height for Door 7’6” high
15	436F298		Bottom Latch Assembly
16	484F218	625	Bottom Latch Screw Packet; containing: (N) 1 - Pin (O) 1 - 1/4 - 20 x 3/4” Phillips Flat Head Machine Screws (Metal Door) 1 - #14 x 3/4” Phillips Pan Head Wood Screw (Wood Door) (V) 1 - 1/4 - 20 x 2” Phillips Flat Head Machine Screws (Metal Door) (V) 1 - 1/4 - 20 x 2” Phillips Oval Head Wood Screw (Wood Door) (Q) 1 - Sex Nut
17a	446F228	625	Bottom Latch Strike Packet (J) 2 - Anchors (W) 1 - Bottom Strike for Surface Mounting (X) 2 - 1/4 - 20 x 5/8” Phillips Flat Head Machine Screws (Metal Door) 2 - #14 x 1 1/4” Phillips Flat Head Wood Screws (Wood Door)
17b	463F928	FIN	Bottom Latch Strike Packet for Option S03 (Flush Mounting); containing: (J) 2 - Anchors 1 - Bottom Strike for Flush Mounting (X) 2 - 1/4 - 20 x 5/8” Phillips Flat Head Machine Screws (Metal Door) 2 - #14 x 1 1/4” Phillips Flat Head Wood Screws (Wood Door)
18	446F208	FIN	Rod Guide Packet; containing: (Y) 4 - #8 x 3/4” Phillips Round Head, Type A Tapping Screws (Z) 2 - Rod Guides
19	650F299		Hole Plug

Note: Packets may contain component parts required for a variety of applications

ITEM	PART NO.	SPECIFY	DESCRIPTION
1			Chassis Sub-Assembly - 1-3/4" to 2-1/4" Door
	690F448		Dummy
	698F438		Passage
	698F448		Classroom
	698F458		Nightlatch
	698F468		Storeroom
	698F518		Classroom - Recore
	698F528		Nightlatch - Recore
	698F538		Storeroom - Recore
Optional			Chassis Sub-Assembly - 1-3/8" Door
	696F248		Dummy
	698F478		Passage
	698F488		Classroom
	698F498		Nightlatch
	698F508		Storeroom
	698F548		Classroom - Recore
	698F558		Nightlatch - Recore
	698F568		Storeroom - Recore
2	698F25	FIN	Rose
3	See Chart on Pg 19		Levers
4	See Chart on Pg 22		Cylinder Assembly
5	585F729		Lever Insert
6	682F918		Recore Driver Packet
7	696F058		Mounting Packet, containing: 1 - Knob Release Tool 2 - #10-24 x 3/4" FRHM-PH 2 - #10-24 x 1" FRHM-PH

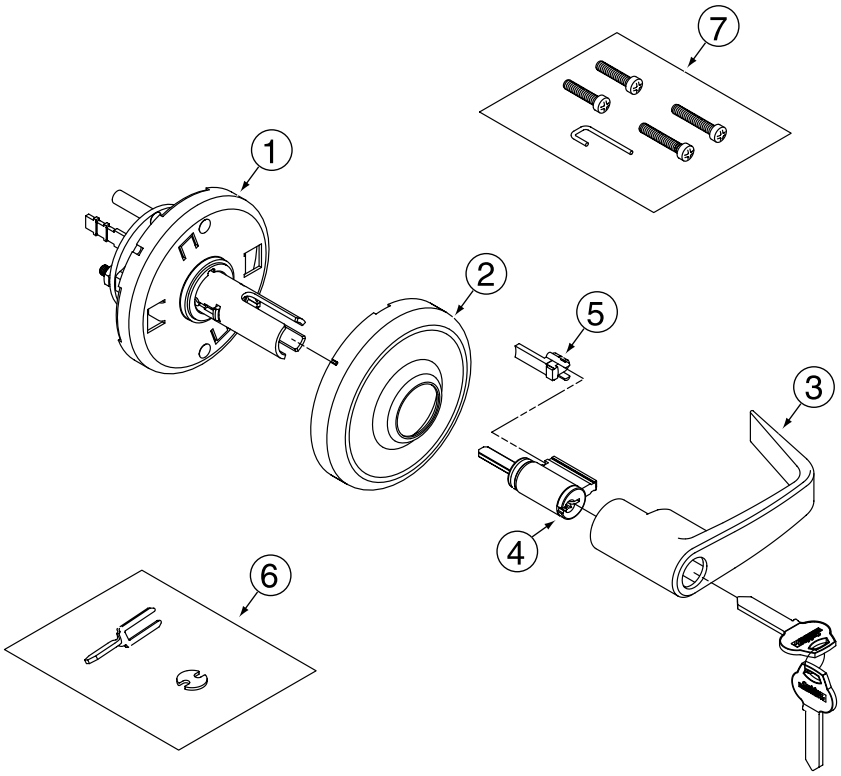

G10 Trim

ITEM	PART NO.	SPECIFY	DESCRIPTION
1	695F22M 695F23M	FIN FIN	Knob Assembly - Plain Knob Assembly - Cylinder
2	2000-033H	FIN	Cylinder - L4 Keyway, 0-bitted unless otherwise specified (see catalog for cylinder options)
3	 690F408 690F418 690F448 698F418 698F458		Chassis Assembly - 1 3/4” to 2 1/4” Door G1010 G1055 G1050 G1059 G1057
4	678F25M	FIN	Rose
5	690F485	622	Knob Shank Adapter
6	219F808		Retaining Ring
7	493F999		Filler Cover
8	696F058		Mounting Packet, containing: 1 - Knob Release Tool 2 - #10-24 x 3/4” FRHM-PH 2 - #10-24 x 1” FRHM-PH

Options

ITEM	PART NO.	SPECIFY	DESCRIPTION
1	697F62M 697F63M 697F64M 697F65M	FIN FIN FIN FIN	Knob Assembly - Plain, Knurled Knob Assembly - Cylinder, Knurled Knob Assembly - Plain, Abrasive Knob Assembly - Cylinder, Abrasive
3	 696F208 696F218 696F248 698F428 698F498		Chassis Assembly - 1 3/8” Door G1010 G1055 G1050 G1059 G1057

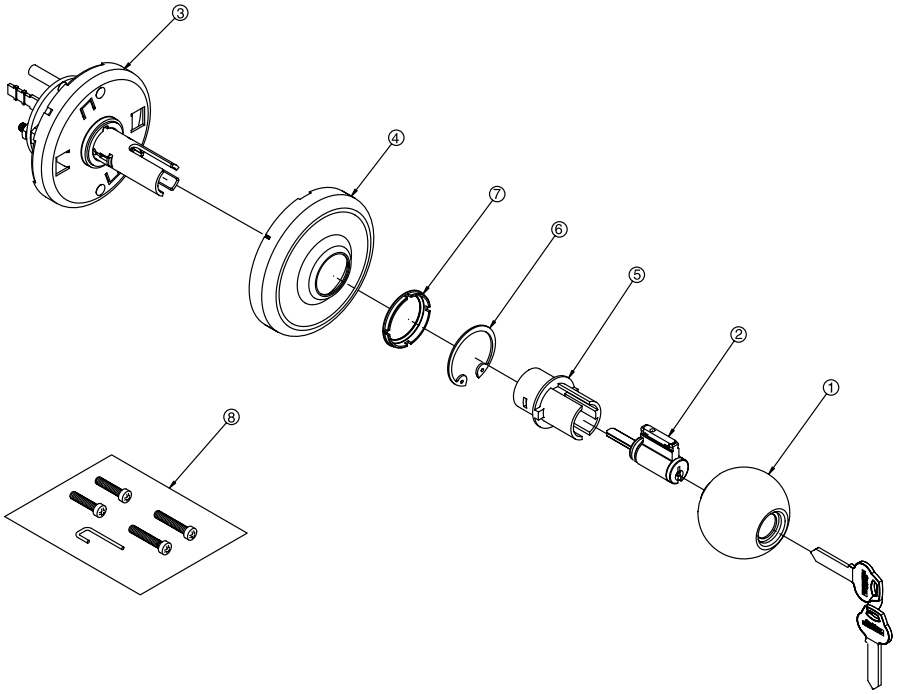

F150 and F157 Trim

ITEM	PART NO.	SPECIFY	DESCRIPTION
1			Plate for
	436F828	FIN	F150 (without cylinder hole)
	436F838	FIN	F157 (with cylinder hole)
2	3000-200	FIN	Cylinder - L4 Keyway, 0-bitted unless otherwise specified (see catalog for cylinder options)
3	021F688		Cylinder Connecting Screw
4a	469F678	FIN	Mounting Packet for F157; containing: (A) 1 - Back Plate for door with 2 1/8” prep (B) 1 - Back Plate for unprepped door (C) 2 - #12-24 x 3/4” Phillips Pan Head Machine Screws (D) 2 - #12 Internal Tooth Lock Washers (E) 2 - #12-24 Sex Nuts
4b	469F688	FIN	Mounting Packet for F150; containing: (C) 2 - #12-24 x 3/4” Phillips Pan Head Machine Screws (D) 2 - #12 Internal Tooth Lock Washers (E) 2 - #12-24 Sex Nuts
5	173F432	FIN	Cylinder Collar

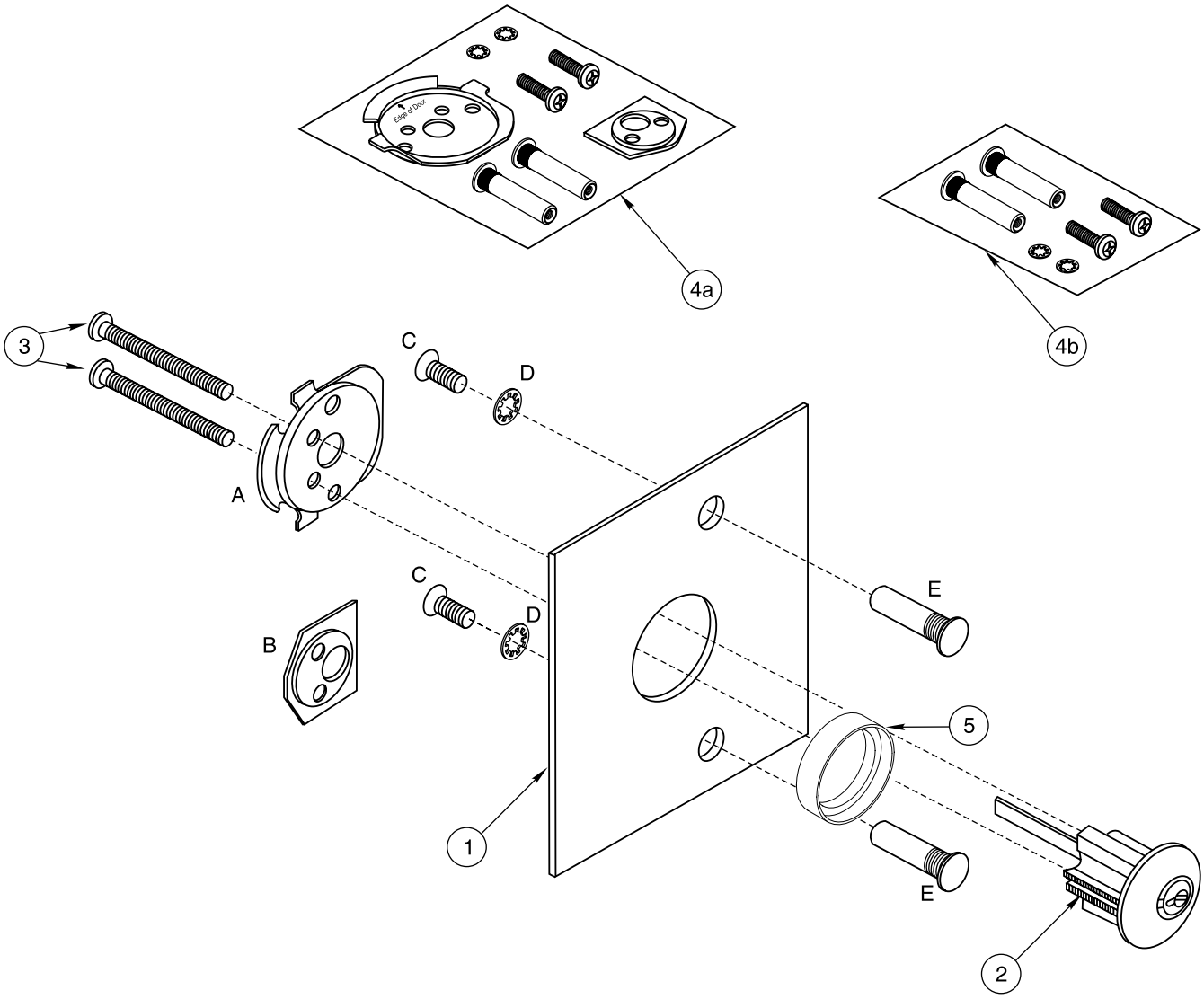

P850 and P857 Trim

ITEM	PART NO.	SPECIFY	DESCRIPTION
1			Pull for
	436F801	FIN	P850 (without cylinder hole)
	436F811	FIN	P857 (with cylinder hole)
2	3000-200	FIN	Cylinder - L4 Keyway, 0-bitted unless otherwise specified (see catalog for cylinder options)
3	021F688		Cylinder Connecting Screw
4a	469F678	FIN	Mounting Packet for P857; containing: (A) 1 - Back Plate for door with 2 1/8" prep (B) 1 - Back Plate for unprepped door (C) 2 - #12-24 x 3/4" Phillips Pan Head Machine Screws (D) 2 - #12 Internal Tooth Lock Washers (E) 2 - #12-24 Sex Nuts
4b	469F688	FIN	Mounting Packet for P850; containing: (C) 2 - #12-24 x 3/4" Phillips Pan Head Machine Screw (D) 2 - #12 Internal Tooth Lock Washers (E) 2 - #12-24 Sex Nuts

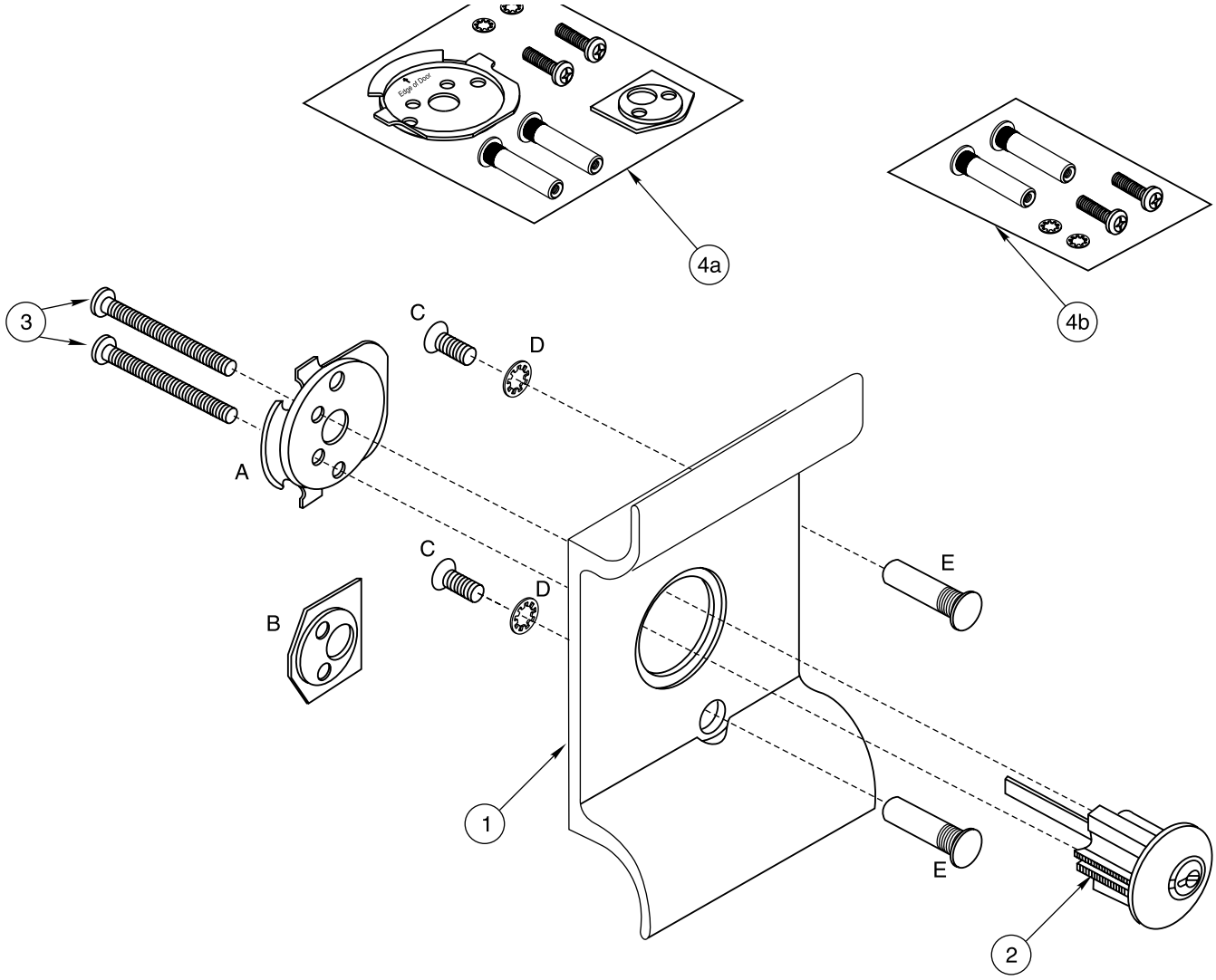

ITEM	PART NO.	SPECIFY	DESCRIPTION
1			Offset Pull; containing:
	492F201	FIN	Without Cylinder Hole
	492F211	FIN	With Cylinder Hole
2	3000-200	FIN	Cylinder - L4 Keyway, 0-Bitted Unless Otherwise Specified (Specify Keyway and Keying. See Catalog for Cylinder Options)
3	021F688		Cylinder Connecting Screw
4a	469F678	FIN	Mounting Packet for P157; containing: (A) 1 - Back Plate for Door with 2-1/8" Prep (B) 1 - Back Plate for Unprepped Door (C) 2 - #12-24 x 3/4" Philips Pan Head Machine Screws (D) 2 - #12 Internal Tooth Lock Washers (E) 2 - #12-24 Sex Nuts
4b	469F688	FIN	Mounting Packet for P150; containing: (C) 2 - #12-24 x 3/4" Philips Pan Head Machine Screws (D) 2 - #12 Internal Tooth Lock Washers (E) 2 - #12-24 Sex Nuts
5	492F598		Rear Side Screw Packet for Offset Pull; containing: (F) 1 - #12-24 x 2-1/4" Philips Flat Head Machine Screw for 1-3/4" - 2" Door Thickness 1 - #12-24 x 2-1/2" Philips Flat Head Machine Screw for 2-1/4" Door Thickness

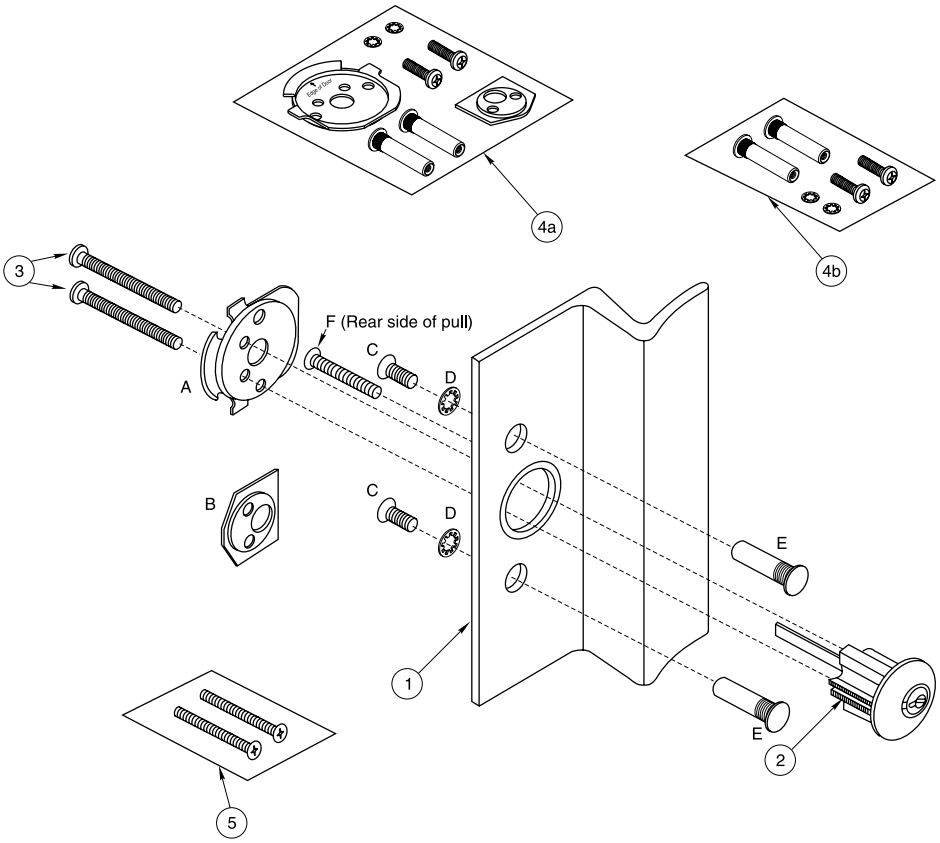

Note: Packets may contain components parts required for a variety of applications.

P250 and P257 Trim

ITEM	PART NO.	SPECIFY	DESCRIPTION
1			Pull Base
	602F171	FIN	with cylinder hole
	602F181	FIN	without cylinder hole
2	3000-200	FIN	Cylinder - L4 Keyway, 0-bitted unless otherwise specified (Specify keyway and keying. See catalog for cylinder options)
3	021F688		Cylinder Connecting Screw
4	602F151	622	Pull Grip
5	606F098	622	#10 - 24 x 5/8” Phillips Pan Head Machine Screw
6a	496F688	FIN	Screw Packet for mounting P257; containing: (A) 1 - Back Plate for door with 2-1/8" prep (B) 1 - Back Plate for unprepped door (C) 2 - #12-24 x 3/4" Phillips Pan Head Machine Screws (D) 1 - #12-24 x 3/4" Phillips Flat Head Machine Screw (E) 3 - #12 Internal Tooth Lock Washers (F) 3 - #12-24 Sex Nuts
6b	496F698	FIN	Screw Packet for mounting P250; containing: (C) 2 - #12-24 x 3/4" Phillips Pan Head Machine Screws (D) 1 - #12-24 x 3/4" Phillips Flat Head Machine Screw (E) 3 - #12 Internal Tooth Lock Washers (F) 3 - #12-24 Sex Nuts

Note: Packets may contain component parts required for a variety of applications

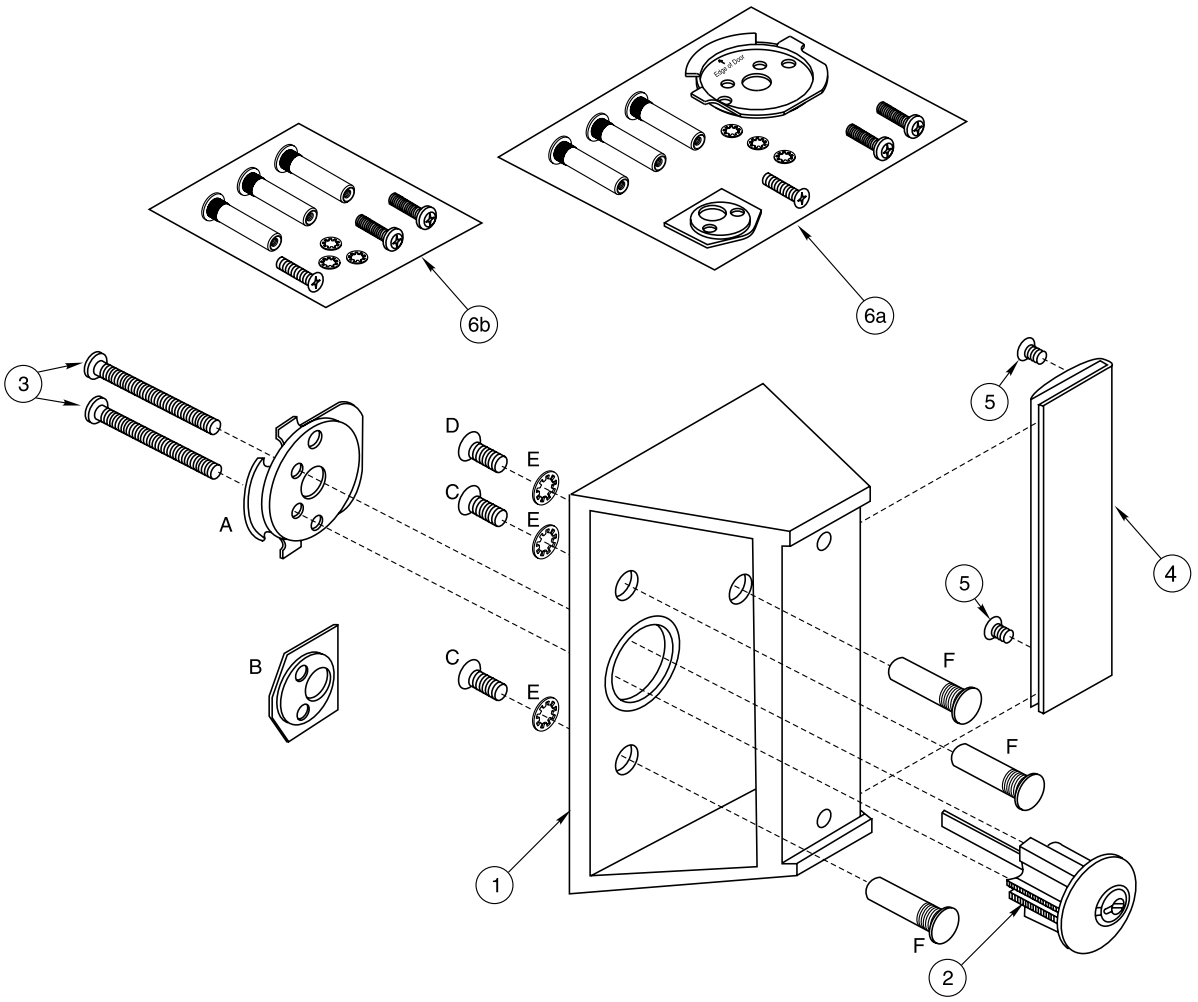

Armstrong
A6

Lever: Die cast zinc
Rose: Wrought brass or bronze

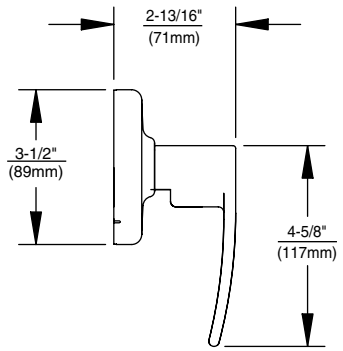

Newport
N6

Lever: Die cast zinc
Rose: Wrought brass or bronze

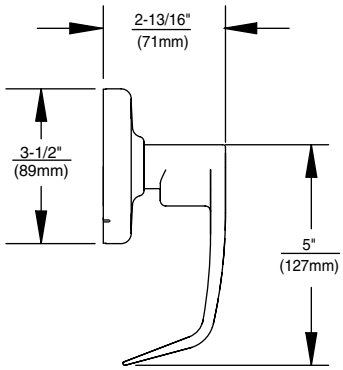

Princeton
PR6

Lever: Die cast zinc
Rose: Wrought brass or bronze

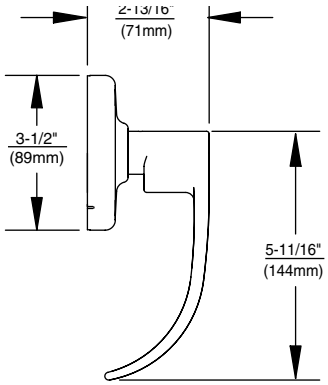

Levers, Standard 1-3/8" to 2-1/4" doors	AZD	NZD	PZD
Cylinder or button	563F895	563F955	685F515
Plain	563F885	563F945	685F505
Sargent® cylinder cutout	N/A	578F435	685F305
Levers, IC, 1-3/8" to 2-1/4" doors			
IC core 6-pin	585F705	585F715	685F535
IC core 7-pin	600F425	600F415	685F545
Best® cylinder cutout	N/A	596F825	685F555
Schlage® cylinder cutout	N/A	690F975	691F035

Shim Kits

PART NO.	SPECIFY	DESCRIPTION
557F928	622 fin only	Shim Kit for ED8200 and ED8200B Rim Devices; containing: 3 - Front Plate Shims 3 - Rear Bar Shims 2 - Screws with attached washers 2 - #10-24 x 1-3/8" Phil. Fillister Head Mach. Screws 2 - #12-24 x 1" Phil. Pan Head Mach. Screws 2 - #12-24 x 1-1/4" Phil. Pan Head Mach. Screws

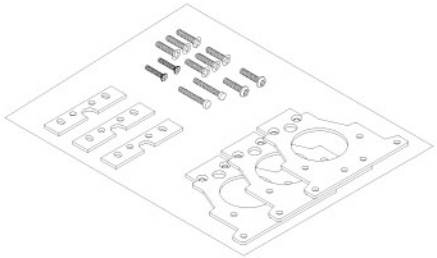

PART NO.	SPECIFY	DESCRIPTION
557F938	622 fin only	Shim Kit for ED8200A Series UL Rim Devices; containing: 3 - UL Rim Front Plate Shims 3 - Rear Bar Shims 2 - Screws with attached washers 2 - #10-24 x 1-3/8" Phil. Fillister Head Mach. Screws 2 - #12-24 x 1-1/4" Phil. Pan Head Mach. Screws 6 - #12-24 x 1" Phil. Flat Head Mach. Screws

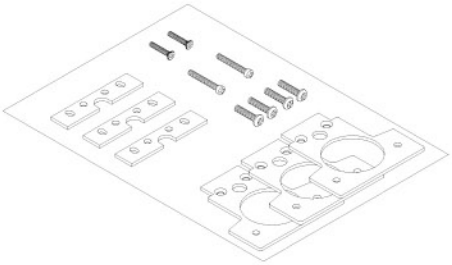

PART NO.	SPECIFY	DESCRIPTION
557F948	622 fin only	Shim Kit for ED8400 Series Vertical Rod Devices; containing: 3 - Front Plate Shims 3 - Rear Bar Shims 6 - Latch Shims 6 - Rod Guide Shims 2 - Screws with attached washers 2 - #10-24 x 1-3/8" Phil. Fillister Head Mach. Screws 2 - #12-24 x 1" Phil. Pan Head Mach. Screws 2 - #14 x 2-3/4" Phil. Oval Head Wood Screws 2 - 1/4-20 x 2-1/4" Phil. Oval Head Type Tapping Screws 2 - 1/4-20 x 1-1/4" Phil. Button Head Undercut Mach. Screws 2 - #14 x 1-1/4" Phil. Button Head Undercut Mach. Screws 2 - #12-24 x 1-1/4" Phil. Pan Head Mach. Screw

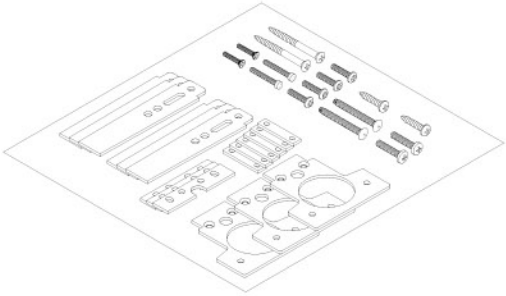

PART NO.	SPECIFY	DESCRIPTION
557F958	622 fin only	Shim Kit for ED8400A Series UL Vertical Rod Devices; containing: 3 - Front Plate Shims 3 - Rear Bar Shims 6 - UL Latch Shims 6 - Rod Guide Shims 2 - Screws with attached washers 2 - #10-24 x 1-3/8" Phil. Fillister Head Mach. Screws 2 - #12-24 x 1" Phil. Pan Head Mach. Screws 6 - #12-24 x 1-1/4" Phil. Pan Head Mach. Screws

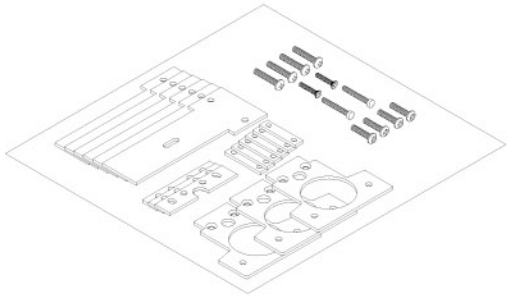

507, 508 & 510 Mullions

ITEM	PART NO	SPECIFY	DESCRIPTION
1	409F836	600	1 - Top Plate with Set Screw
2	220F82 7		4 - Top Plate Mounting Screw 1/4-20” x 1” FHM-PH
3	405F458 464F028 606F058	600 600 600	1 - Mullion up to 7-1/2' Door 1 - Mullion up to 8' Door 1 - Mullion up to 10' Door
8	405F49 6	600	1 - Bottom Plate with Set Screw
9	405F31 8		2 - Floor Anchor Screw 3/8-16” x 1” FHM-PH
10	405F42 8		2 - Floor Anchor

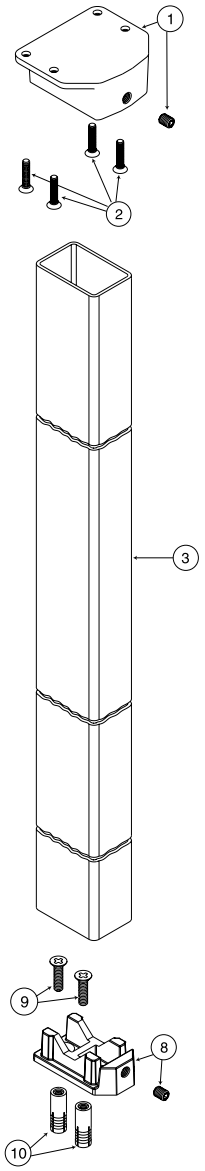

707A, 708A, 710 Mullions & KM Option

ITEM	PART NO	DESCRIPTION
1		Mullion only
	655F50-8	7’ for 707A
	655F51-8	8’ for 708A
	655F52-8	10” for 710
2	655F60-8	Upper Mounting Bracket
3	655F61-8	Lower Mounting Bracket
4	655F62-8	Anchor Pad
5	655F65-8	Screw Pack contains: Screw # 12-24 x 3/4” FHM-PH (4) Set Screw 5/16 - 18 x 3/8” (1) Set Screw, Half Dog (2) 5/16 - 18 x 5/8” Screw 1/4 - 20 x 3/4” RHM-PH (2) Lock Washer 1/4” (2) Masonry Anchor 1/4 - 20 (2)
6	655F63-8	Angle Bracket Packet (optional) contains: Angle Bracket (1) Screw # 12-24 x 7/16” OHM-PH (2)
7	653F11-1	Stabilizer Kit (optional) contains: Stabilizer Brackets (2) Stabilizers (2) Stabilizer Spacers (4) Screw #10-24 x 3/4” FHM-PH (4) Screw #10-24 x 1” FHM-PH (4)
	655F18-8	Parts Packet contains: Items 2, 3, 4, and 5
8	685F20-8	Keyed Removable Mullion Retro-Fit Kit (cylinder not included unless specified)

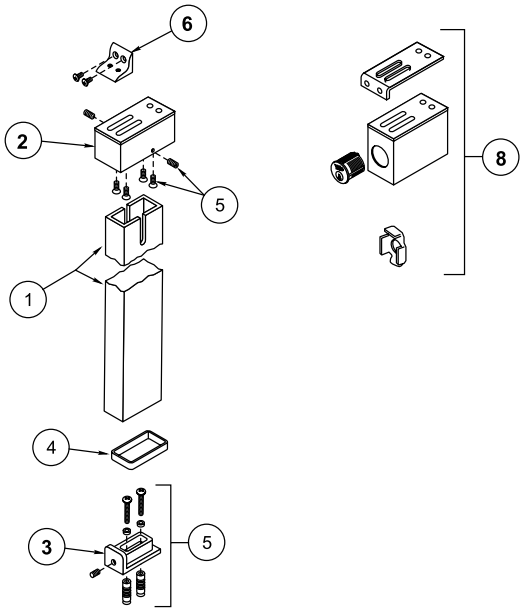

Cylinders

L4 keyway standard. To order with Exit Device, see How to Order, page 17.
To order separately, specify Part No. x Keyway x Finish (e.g., 2000-033-7 x L4 x 626).

Cylinder Type	Part No.	Description
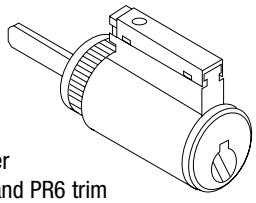 Key-in-Lever for A6, N6 and PR6 trim	2000-033 2000-033-7 2010-033 2020-033	6-pin 7-pin 6-pin, Security 7-pin, Pyramid
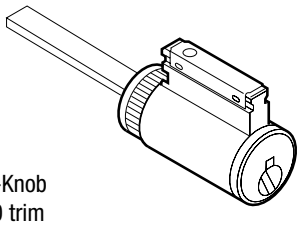 Key-in-Knob for G10 trim	2000-033H	6-pin
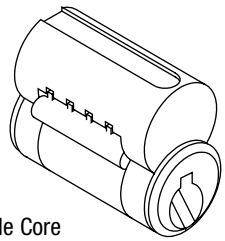 Interchangeable Core Optional for A6, N6, PR6 trim	8000 8000-7 8010 8020	6-pin 7-pin 6-pin, Security 7-pin, Pyramid
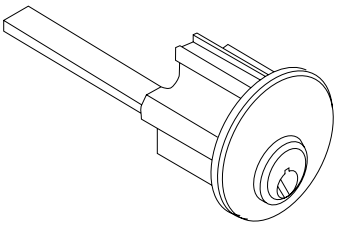 Rim for all other trim	3000-200 3000-138 3000-200-7 3010-200 3012-178 3080-178 3070-178 3070-178-7 3080-178-7 3090-178 3070-114/3080-114 3070-114 3080-114-7 3070-114-7	6-pin 6-pin, horizontal tailpiece for exit alarm supplied when M61 or M62 is ordered 7-pin, horizontal tailpiece 6-pin, horizontal tailpiece, Security 6-pin, blockout function, Security 6-pin, interchangeable core (IC) 6-pin, IC less core 7-pin, IC less core 7-pin, IC 6-pin, Security IC 6-pin, IC for exit alarm supplied when M61 or M62 is ordered 6-pin, IC less core for M61 or M62 7-pin, IC for M61 or M62 7-pin, IC less core for M61 or M62

Compatibility with Competitive Cylinders (N6 and PR6 trims only)

Competitive Cylinder	Complete Trim	Parts for Field Conversion
Schlage conventional 21-002, 23-001 or 23-013	Specify M06	682F39-8 Tailpiece
Schlage Primus 20-548, 20-550, 20-748 or 20-750	Specify M06	682F39-8 Tailpiece
Best style core, 6 or 7-pin	Specify M08	Field Conversion Not Practical
Sargent 13-3266	Specify M09	682F96-9 Tailpiece kit and Special Lever
Schlage IC Core	Specify M69	697F94-2 Tailpiece

For Assa and Medeco retrofit cylinders, consult those manufacturers' catalogs.

Rim Devices

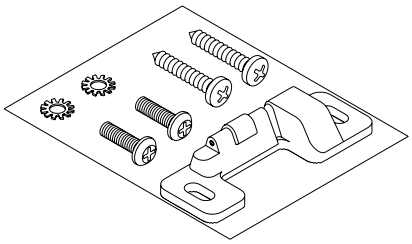

386F45
Standard Strike - ED8200

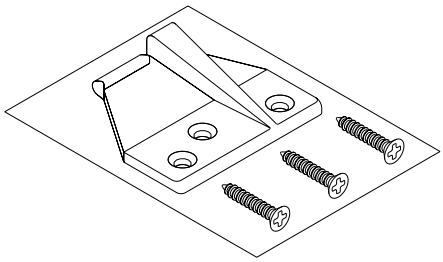

468F30
S02 Optional Strike - ED8200

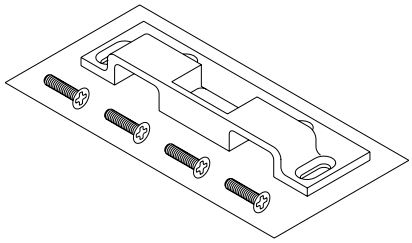

518F06
Standard Strike - ED8200A

Vertical Rod Devices

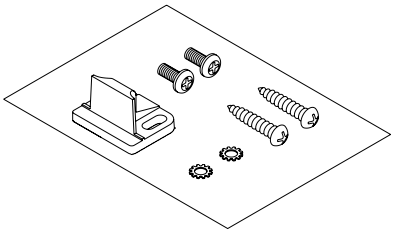

446F21
Standard Top Strike
ED8400

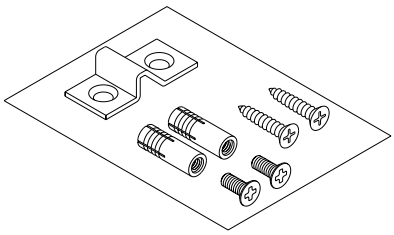

446F22
Standard Bottom Strike
ED8400

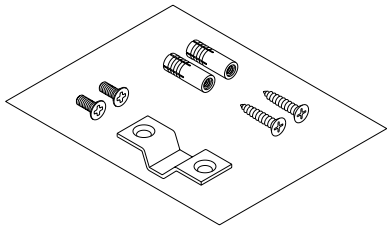

463F92
S03 Bottom Latch Strike
ED8400

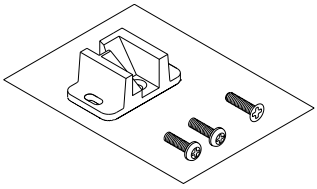

526F52
Standard Top Strike
ED8400A

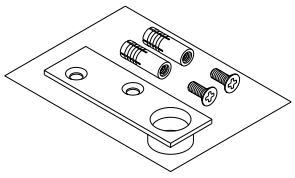

526F53
Standard Bottom Strike
ED8400A

For more information regarding Corbin Russwin Locksets, Exit Devices, Door Controls and Key Systems, contact your authorized Corbin Russwin Distributor or Sales Representative.

In U.S.:
Corbin Russwin Architectural Hardware
1902 Airport Road
Monroe, NC 28110
Phone 800-543-3658
Fax 800-447-6714
www.corbin-russwin.com

In Canada:
Yale-Corbin Canada Ltd.
6940 Edwards Boulevard
Mississauga, ONT L5T 2W2
Phone 800-461-3007
Fax 800-461-8989
www.yalecorbin.on.ca

The ASSA ABLOY Group is the world's leading manufacturer and supplier of locks and associated products, dedicated to satisfying end-user needs for security, safety and convenience.

Corbin Russwin and Design® is a registered trademark of Corbin Russwin Inc. Other products brand names may be trademarks or registered trademarks of their respective owners and are mentioned for reference purposes only. These materials are protected under US copyright laws. All contents current at time of publication. Corbin Russwin, Inc. reserves the right to change availability of any item in this catalog, its design, construction, and/or its materials.

An ASSA ABLOY Group company

ASSA ABLOY

45216-X-0.0-1/02R