Accessories

Cylinders

Specify Part Number x Keyway x Finish (e.g., 1000-118-A02 x L4 x 626).

Cylinder Type	Part Number	Description
Mortise (ED5600, ED5600A and cylinder dogging only)	1000-118-A02	6 - pin, 1 1/8" straight cam
	1000-114-A02-7	7 - pin, 1 1/8" straight cam
	1010-118-A02	6 - pin, 1 1/8" high security, straight cam
	1080-114-A02	6 - pin, 1 1/8" interchangeable core (IC) straight cam
	1070-114-A02	6 - pin, 1 1/4" IC less core
	1090-114-A02	6 - pin, 1 1/4" IC high security straight cam
	1012-114-A02	6 - pin, 1 1/4" high security with blockout
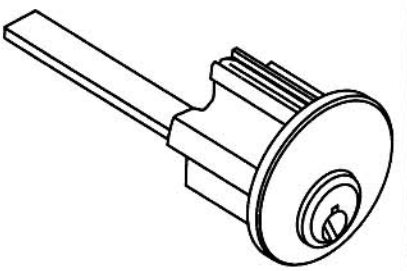 Rim (non-mortise trim only)	3000-138*	6 - pin, horizontal tailpiece
	3000-138-7*	7 - pin, horizontal tailpiece
	3010-138*	6 - pin, horizontal tailpiece high security
	3012-114*	6 - pin, blockout function high security
	3080-114*	6 - pin, 1 1/8" interchangeable core (IC)
	3070-114*	6 - pin, IC less core
	3070-114-7*	7 - pin, IC less core
	3080-114-7*	7 - pin, IC
	3090-114*	6 - pin, high security IC

*For 57 function trim, change "-138" to "-200" and change "-114" to "-178".

Cylinder Collars

To order separately, specify Part Number x Finish

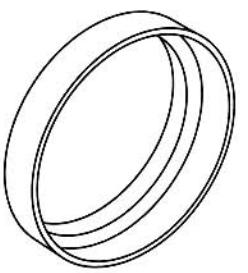

Cylinder Length	Cylinder Mechanism	Application	Collar
1 1/8"	6 - pin conventional High security	Rim and vertical rod trim	270F15
		Mortise 1 3/4" - 2" door	447F42
		Mortise 2 1/4" door	447F41
		Dogging cylinder	None
1 1/4"	7 - pin conventional 6 - pin IC High security IC Blockout	Rim and vertical rod trim	654F07
		Mortise 1 3/4" - 2" door	610F02
		Mortise 2 1/4" door	447F42
		Dogging cylinder	270F15
1 1/2"	7 - pin IC	Rim and vertical rod trim	654F08
		Mortise 1 3/4" - 2" door	609F36
		Mortise 2 1/4" door	610F02
		Dogging cylinder	654F07

Accessories

Shim Kits
Designed for mounting an exit device over raised vision light molding. Each kit contains the parts required to shim a device 1/4". Black finish.

Exit Device Type	Shim Kit Part No.
ED5200(A) ED5600(A) ED5800(A)	697F33-8
ED5400(A)	697F34-8
ED4200 ED4800	697F35-8
ED4400	697F36-8

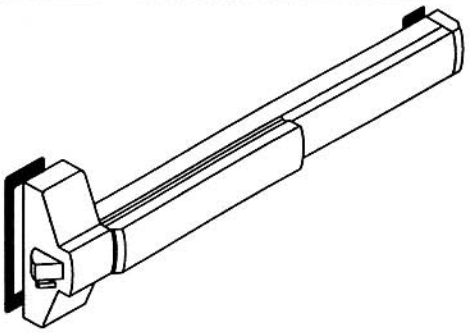

Cylinder Dogging Kits
Designed to convert a panic device from hex key dogging to cylinder dogging.
Not permitted on fire-rated devices.

Bar Length	Cylinder Dogging Kit Part No.
36"	653F12
48"	653F14

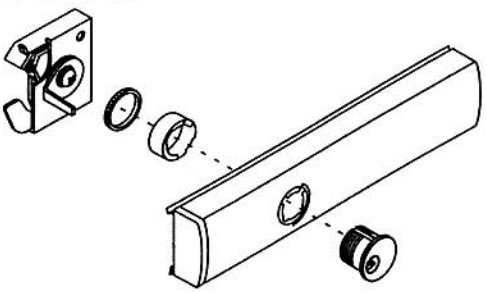

Surface and Concealed Vertical Rod Extension Kits
Used to extend the height of standard length rods supplied with ED4400, ED4800, ED5400(A), and ED5800(A) Series exit devices.

Rod Extension	Kit Part Number (Specify Finish)
2"	655F15
6"	655F16
12"	655F17

Flush Transom Top Strike Bracket
Optional for use with ED4400 and ED5400(A) devices. Used to mount top strike on openings with flush transom. 2 1/2" x 1 5/8". Black finish only.

650F87-8

Bottom Strike for 1/2" Thresholds
Optional for use with ED4400, ED4800, ED5400(A) and ED5800(A) devices. Required in fire-rated openings with 1/2" threshold or for flush mount. 2 5/8" x 1 1/16". Black finish only.

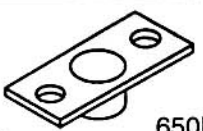

650F88-8

ANSI Wrought Strike Box
Optional for use with ED5600(A) devices.

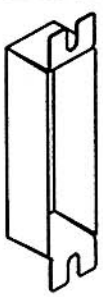

120F76-8

Rim Strike for Pairs of Doors with Vertical Rod Device
For ED5200A. Black finish.

655F71-8

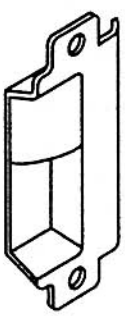

Open Back Strike
Optional for use with ED5600 x ED5400 devices on a pair of doors. Non-handed, 4 7/8" x 1 1/4". Black finish only.

Door Thickness	Type	Part No.
1 3/4"	Curved lip	653L18-3016
	Straight lip	653L16-3016
2 1/4"	Curved lip	653L18-3020
	Straight lip	653L16-3020

Mullion Parts

707A, 708A, 710 for ED5000 Series Devices

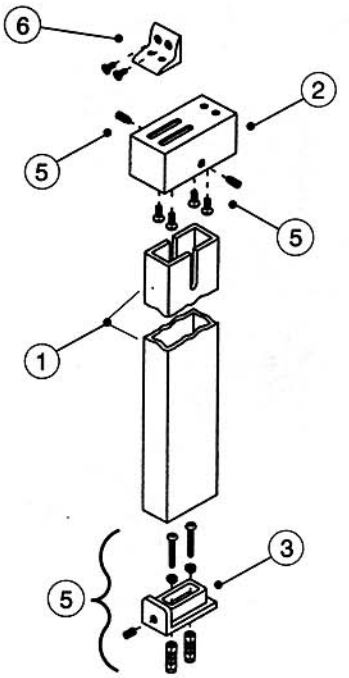

ITEM	PART NO.	DESCRIPTION
1	655F50-8 655F51-8 655F52-8	Mullion only 7' for 707A 8' for 708A 10' for 710
2	655F60-8	Upper Mounting Bracket
3	655F61-8	Lower Mounting Bracket
4	655F62-8	Anchor Pad
5	655F65-8	Screw Packet contains: Screw #12–24 x 3/4" FHM-PH (4) Set Screw 5/16–18 x 3/8" (1) Set Screw, Half Dog (2) 5/16–18 x 5/8" Screw 1/4–20 x 3/4" RHM-PH (2) Lock Washer 1/4" (2) Masonry Anchor 1/4–20 (2)
6	655F63-8	Angle Bracket Packet (optional) contains: Angle Bracket (1) Screw #12–24 x 7/16" OHM-PH (2)
7	653F11-1	Stabilizer Kit (optional) contains: Stabilizer Brackets (2) Stabilizers (2) Stabilizer Spacers (4) Screw #10–24 x 3/4" FHM-PH (4) Screw #10–24 x 1" FHM-PH (4)
	655F18-8	Parts Packet contains: Items 2, 3, 4, and 5

808 for ED4000 Series Devices

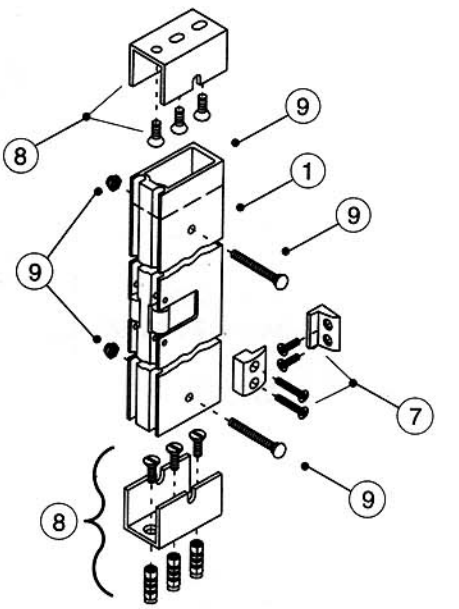

ITEM	PART NO.	DESCRIPTION
1	655F53-1*	Mullion only, 8'
7	653F11-1*	Stabilizer Kit contains: Stabilizer Brackets (2) Stabilizers (2) Stabilizer Spacers (4) Screw #10–24 x 3/4" FHM-PH (4) Screw #10–24 x 1" FHM-PH (4)
8	655F56-8*	Mounting Bracket Packet contains: Mullion Mounting Plate (2) 1/4–20 x 1/2" FHUM-PH (6) 1/4–20 Masonry Anchor (3)
9	655F59-8*	Carriage Bolt Packet contains: 1/4–20 x 1 3/4" Carriage Bolt (2) 1/4–20 Acorn Nut (2)
	Not Shown: 655F19-8*	Parts Packet contains: Items 7, 8, and 9

* Specify 628 or 695 finish

Troubleshooting Guide

Many problems with the operation of exit devices are caused by factors other than the device itself. Among the most common is a misalignment or an improper fit of the door within the frame.

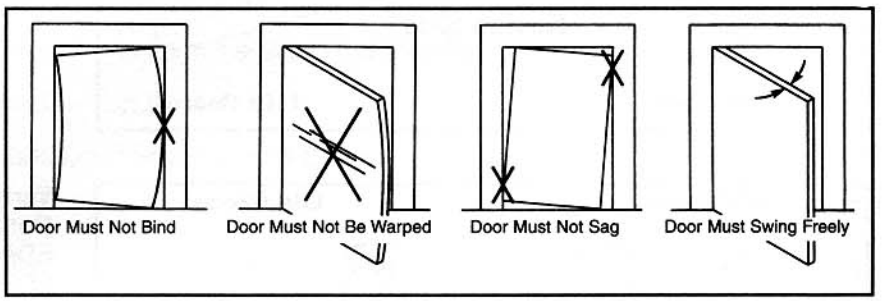

Another common source of problems is improper installation. Even if all cutouts and screw holes are properly located, exit devices must be securely fastened to properly reinforced doors. Hollow doors and frames with a structural thickness (metal skin plus reinforcement, or solid hardwood) must have at least three full screw threads to be considered reinforced.

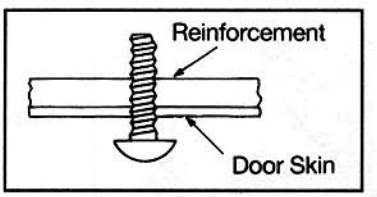

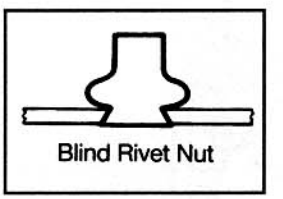

Thinner doors and frames require the following fasteners for secure and proper operation:

Doors:
Use sex nuts and bolts

Frames:
Use blind rivet nuts
(not furnished by Corbin Russwin).

Handing Instructions

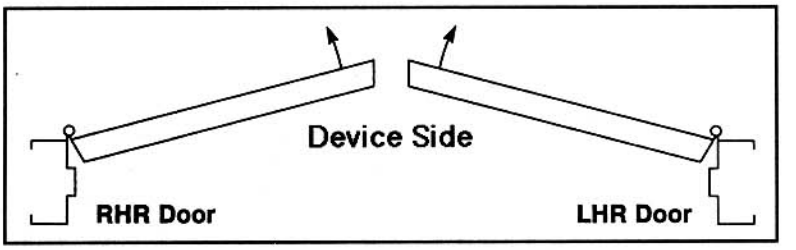

Rim Devices
ED4200, ED5200(A) series

These devices are non-handed.

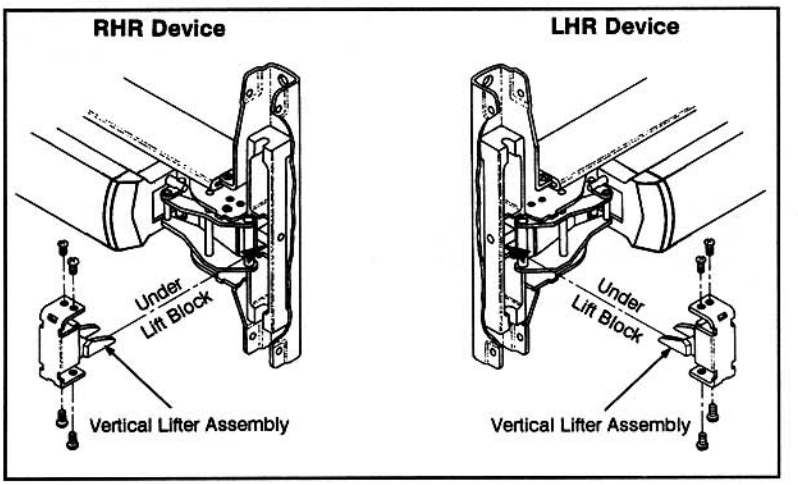

Vertical Rod Devices, Surface and Concealed
ED4400, ED4800, ED5400(A), ED5800(A) series

Remove four screws and vertical lifter assembly. Turn device to opposite orientation, insert lifter assembly and reinstall screws.

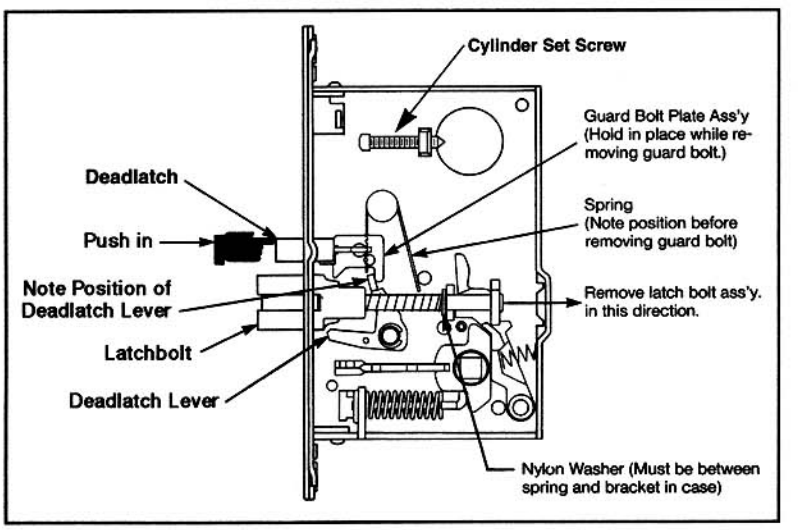

Mortise Devices
5600(A) Series

To reverse, remove latchbolt and deadlatch, flip both over and reinstall. Also flip cylinder set screw and clamp assembly.

Illustration depicts typical lockbody with cover removed. Only components relevant to lock handing are shown. Other components vary according to lock function.

Handing Instructions

x7 Lever Handle Trim

1. Remove cotter pin.
2. Remove castle nut.
3. Observe spring orientation:
   LHR: Red spring (part # 651F61-8)
   Short lead is at 11 o'clock and long lead is to lever side of stump at 6 o'clock.
   RHR: Blue spring (part # 651F62-8)
   Short lead is at 11 o'clock and long lead is to lever side of stump at 6 o'clock.
4. Remove round housing, spring and spacer.
5. Note orientation of "gap" which governs rotation in gear and remove gear.
6. Rotate lever 180°.
7. Flip gear over and reinstall, observing proper gap orientation for new direction of rotation:
   LHR 6 - 8 o'clock
   RHR 4 - 6 o'clock
8. Install spring of opposite hand (color). Place spring around spindle with long lead against gear and to lever side of post. Place housing (gap side toward lever) over spring and spindle until square in housing begins to slide down on spindle. While applying downward pressure on housing, wind short lead of spring toward lever until housing snaps into place.
9. Replace spacer in housing. Spring, housing and spacer should now be oriented as indicated in step 3 above.

   Note: Housing gap will always be to the lever side and spring will be slightly preloaded when properly installed.
10. Be sure lever thimble is seated properly in escutcheon. Reinstall nut but do not over tighten. Lever should rotate freely.
11. Replace cotter pin.

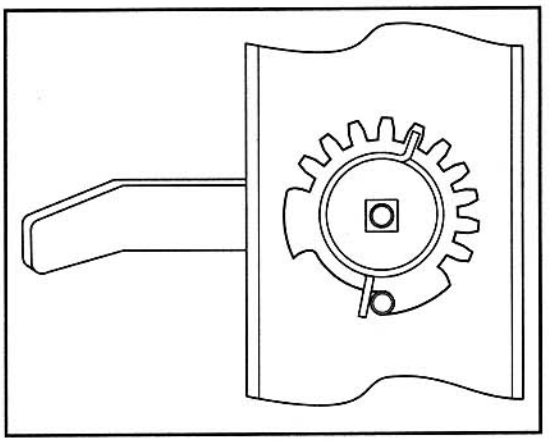

Right-hand reverse (blue spring)

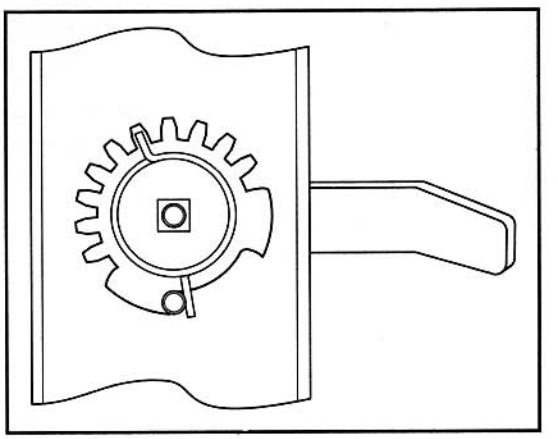

Left-hand reverse (red spring)

ED4400 and ED5400(A) Surface Vertical Rod Devices

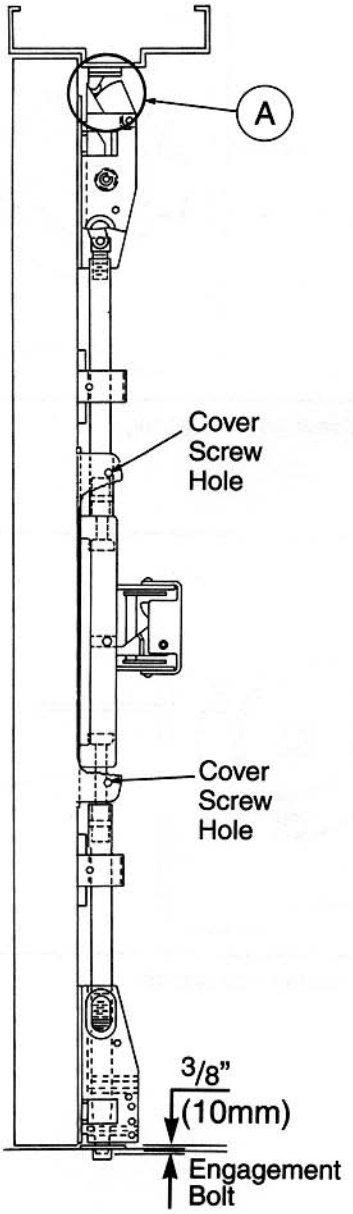

If top latch does not engage properly, check alignment. When locked, roller on strike should be between tripping lever and bolt (area A). Shim or reposition strike if necessary.

Bolts extend automatically when door closes and top strike hits tripping lever. Top bolt should retract flat. Bottom bolt should travel 1/2" and engage 3/8" into strike in down position, without dragging on floor surface in up position.

Rod Adjustment for Bolt Throw

1. Remove active case cover screws and cover.
2. For each rod to be adjusted, remove rod guide cover screws and rod guide cover. Tilt rod out of engagement in active case. Allow it to snap out of rod guide. Twist rod clockwise (inward) to shorten bolt throw or counter-clockwise (outward) to lengthen throw.
3. Snap rod(s) back into position and test operation by opening and closing door. Repeat step 2 if necessary.
4. When adjustment is complete, reinstall rod guide cover and active case cover.

Maintenance

1. Periodically remove covers and coat mechanisms with a silicone base lubricant. This is regularly required in corrosive environments for proper product operation.
2. Check mounting fasteners periodically. Retighten if found loose. Apply screw locking compound or change part fasteners if screws continue to back out.
3. Periodic checks and adjustments of rods may be required to compensate for door or frame sag.

ED4800 and ED5800(A) Concealed Vertical Rod Devices

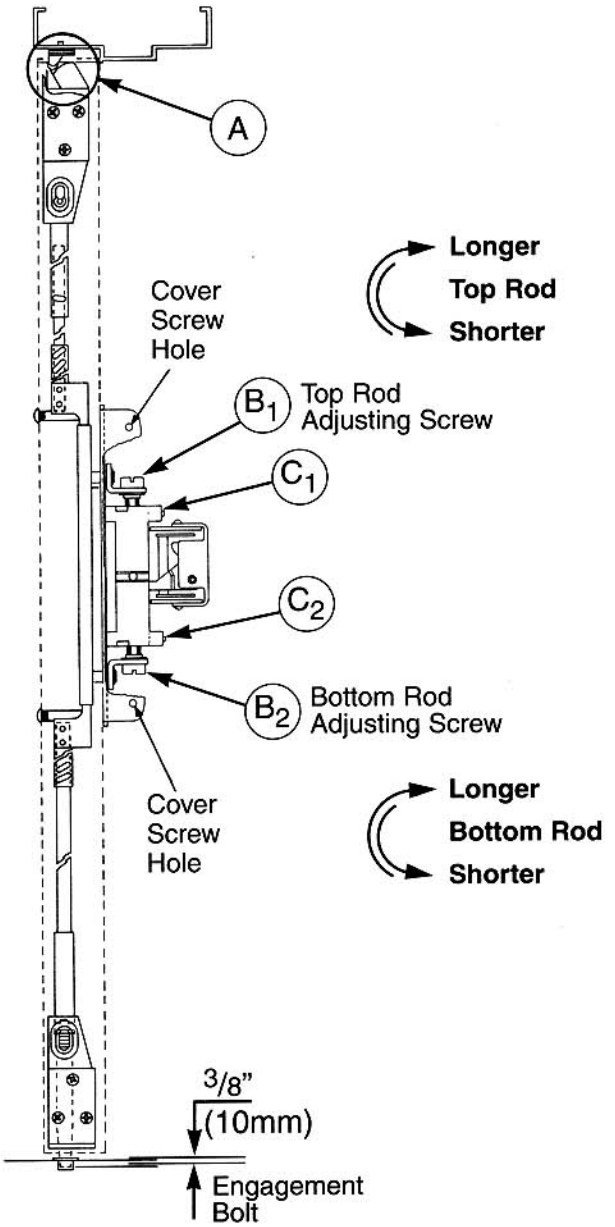

Rods should move freely inside door. Bolts extend automatically when door closes and top strike hits tripping lever. Top bolt should retract flat. Bottom bolt should travel 1/2" and engage 3/8" into strike in down position, without dragging on floor surface in up position.

If top latch does not engage properly, check alignment. When locked, roller on strike should be between tripping lever and bolt (Area A). Shim or reposition strike if necessary.

Rod Adjustment for Bolt Throw

1. Remove active head cover screws and cover.
2. Use 3/32" Allen wrench to loosen set screws C1 and C2.
3. Adjusting screws B1 and B2 only provide fine rod adjustment. If screws bottom out before proper device operation, door and device must be removed. Larger adjustments may then be made either by threading rod in or out, or by moving cotter pin to different hole in rod.
4. When finished, lock adjusting screws in place with Allen set screws. Caution: To avoid thread damage and provide positive locking, be sure Allen set screws engage flats on adjusting screws.

Maintenance

1. Periodically remove covers and coat exposed mechanisms with a silicone base lubricant. This is regularly required in corrosive environments for proper product operation.
2. Check mounting fasteners periodically. Retighten if found loose. Apply screw locking compound or change part fasteners if screws continue to back out.
3. Periodic checks and adjustments of rods may be required to compensate for door or frame sag.

For more information regarding Corbin Russwin Locksets, Exit Devices, Door Controls and Key Systems, contact your authorized Corbin Russwin Distributor or Sales Representative.

In U.S.:
Corbin Russwin Inc.
1902 Airport Road.
Monroe, NC 28110 USA
Phone 800-543-3658 / 704-283-2101
Fax 800-447-6714 / 704-289-6937
www.yalesecurity.com

In Canada:
Corbin Russwin Canada
3160 Orlando Drive
Mississauga, ONT L4V 1R5
Phone 800-461-3007 / 905-672-6220
Fax 800-461-8989 / 905-672-9022
www.yalecorbin.on.ca/

These materials are protected under US copyright laws. All contents current at time of pulication. Corbin Russwin reserves the right to change availability of any item in this catalog, its design, construction, and/or its materials.

#45255-C-5.0-2/00R