Corbin Russwin®

ED7000 SERIES EXIT DEVICE PARTS LIST

When ordering Parts, SPECIFY Part Number, Hand (if required), Finish (if part is exposed), Description and Exit Device for which it is required.

EXAMPLE:

269F65	RH	- 612	Active Case S.A.	for ED7200 Exit Device
Part Number	Hand	Finish	Description	Exit Device

CORBIN RUSSWIN ARCHITECTURAL HARDWARE
225 EPISCOPAL ROAD
BERLIN, CONNECTICUT 06037

ED7200 RIM EXIT DEVICE

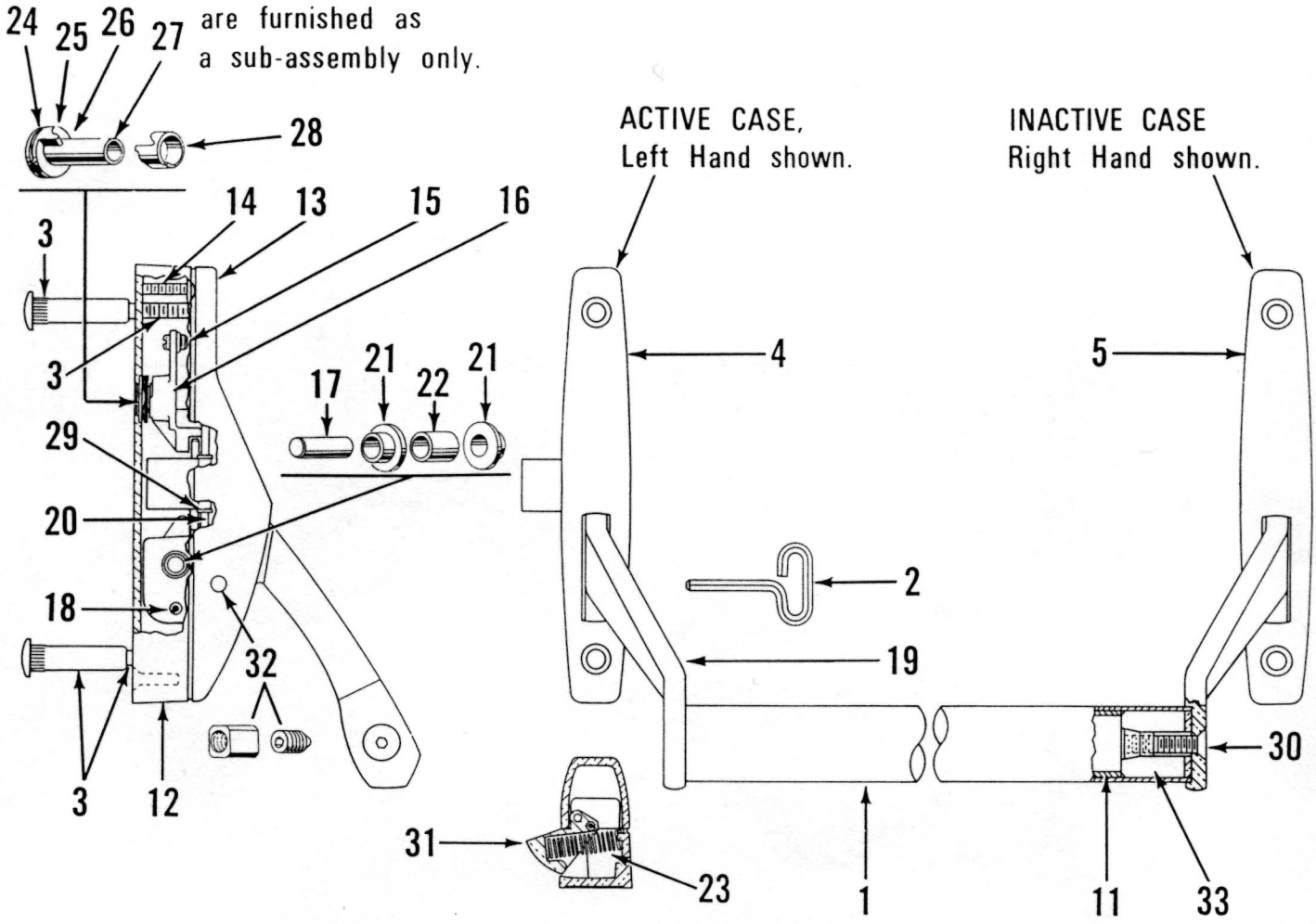

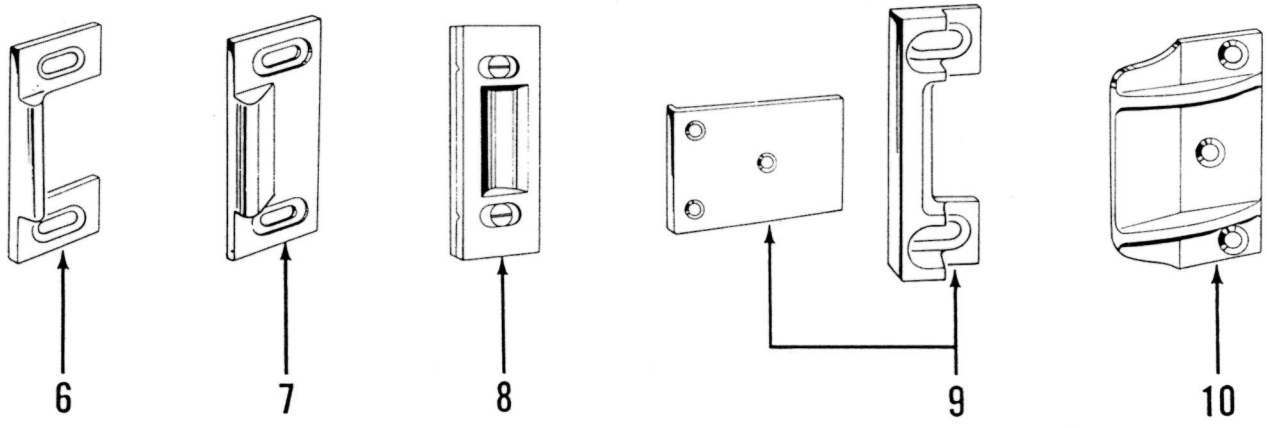

ED7200

ITEM	PART NAME and DESCRIPTION			PART NO.
1	CROSSBAR Regularly 31 11/16" long, unless otherwise specified			141L59
2	WRENCH			123F53
3	SCREW PACKET No Outside Trim, For Active & Inactive Cases (4 each Sex Nuts & Bolts)		1 3/8" Door	329F75
			1 3/4" Door	269F91
			2 1/4" Door	270F01
	For Inactive Case ED7200, ED7200 x M52, ED7200 x M66 (2 each Sex Nuts & Bolts)		1 3/8" Door	329F76
			1 3/4" Door	269F92
			2 1/4" Door	270F02
4	ACTIVE CASE SUB ASS'Y	ED7200	R. H.	269F69
			L. H.	269F70
		ED7200 x M52	R. H.	269F71
			L. H.	269F72
		ED7200 x M66	R. H.	269F65
			L. H.	269F66
		ED7200 x M52 x M66	R. H.	269F67
			L. H.	269F68
5	*INACTIVE CASE SUB ASS'Y	ED7200, ED7200 x M66	R. H.	269F73
			L. H.	269F74
		ED7200 x M52, ED7200 x M66 x M52	R. H.	269F75
			L. H.	269F76
6	ADJ. STRIKE (includes screws)			145F56
7	ADJ. STRIKE (includes screws)			145F55
8	ADJ. STRIKE (includes screws)			142F43
9	ADJ. STRIKE (includes screws)			300F71

*See page 8 for Inactive Case component parts list.

ITEM	PART NAME and DESCRIPTION			PART NO.
10	ADJ. STRIKE (includes screws)			292F41
11	REINFORCING TUBE specify length			141L54
12	ACTIVE CASE			269F36
13	COVER	ED7200, ED7200 x M66	R. H.	269F33
			L. H.	269F34
		ED7200 x M52, ED7200 x M52 x M66		269F34
14	10-32 X 1" PHILLIPS FLAT HEAD MACHINE SCREW			291F57
15	SCREW			333F51
16	LATCH RETRACTOR	ED7200 x M66		269F39
		ED7200		269F40
17	LEVER PIVOT			269F48
18	59-040-187-05-0750 ROLLPIN			228F80
19	LEVER		R. H.	269F32
			L. H.	269F31
20	LATCH PIN			269F58
21	BUSHING			269F49
22	NYLINER			269F47
23	LATCH SPRING			269F53
24	WASHER	ED7200 x M66		269F56
		ED7200		269F55
25	SPRING WASHER			269F57
26	HUB			269F37
27	HUB SHANK			269F52
28	HOLDBACK SLEEVE			269F46
29	NYLON WASHER			164F32
30	5/16-24 UNF-2A X 1 1/2" FH SOCKET MACHINE SCREW			261F31
31	LATCH SUB ASS'Y			376F42
32	DOGGING DEVICE SUB ASS'Y			321F90
33	TENON SUB ASS'Y			378F74

ED7400 SURFACE VERTICAL ROD

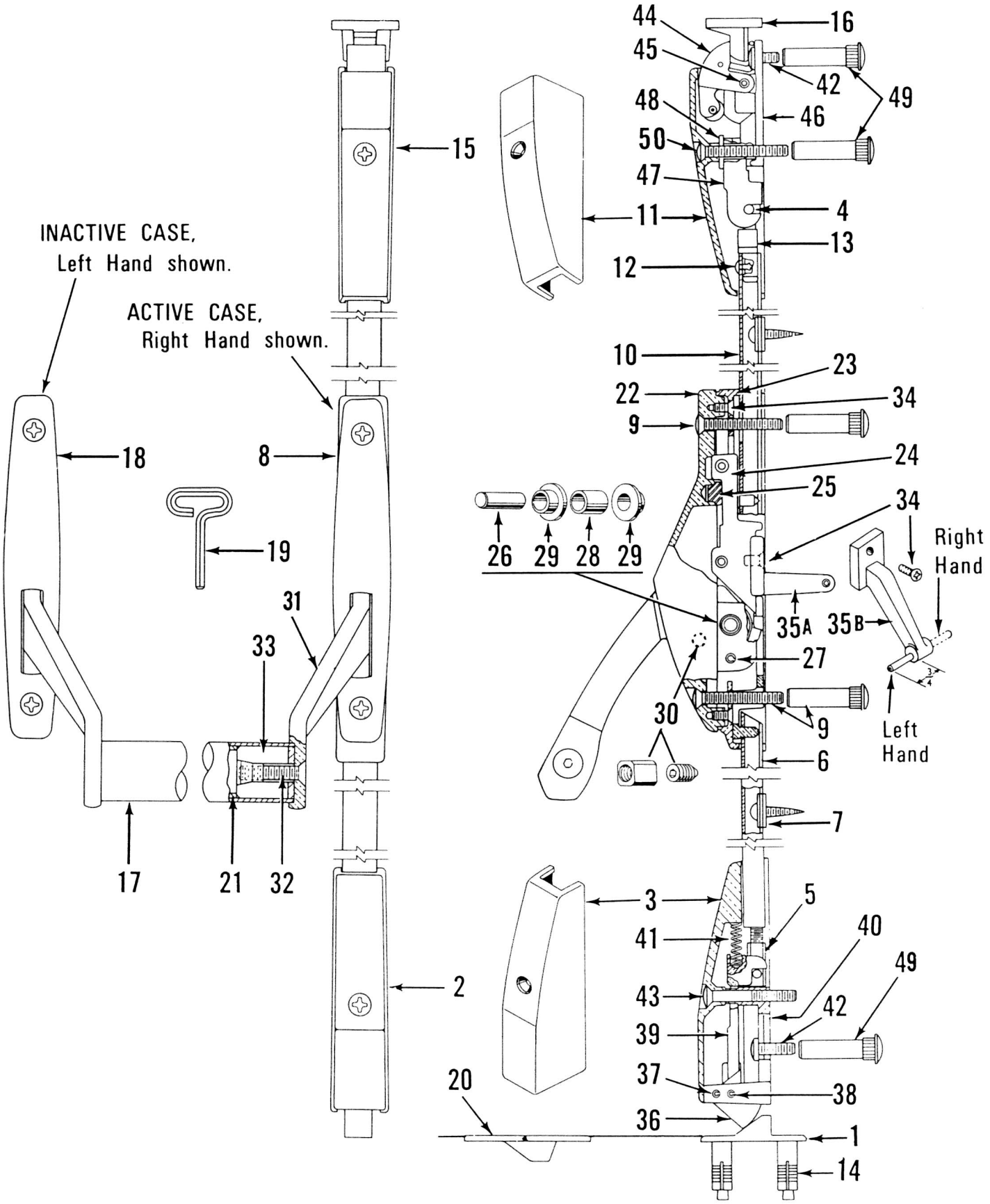

ED7400

ITEM	PART NAME and DESCRIPTION			PART NO.
1	BOTTOM STRIKE (includes screws and anchors)			352F04
2	BOTTOM LATCH SUB ASS'Y (complete bottom latch less cover)			351F90
3	BOTTOM LATCH COVER			351F72
4	PIN			352F03
5	ADJUSTING BOLT			351F93
6	ADJ. BOTTOM ROD SUB ASS'Y			392L19M537
7	ROD GUIDE SUB ASS'Y			352F01
8	ACTIVE CASE SUB ASS'Y No outside trim 1 3/8", 1 3/4", 2 1/4" Doors ED7400	With dogging	R. H.	351F56
			L. H.	351F57
		Less dogging	R. H.	351F58
			L. H.	351F59
	With outside operator trim 1 3/4" Doors ED7400	With dogging	R. H.	351F60
			L. H.	351F61
		Less dogging	R. H.	351F62
			L. H.	351F63
	With outside operator trim 2 1/4" Doors ED7400	With dogging	R. H.	364F82
			L. H.	364F83
		Less dogging	R. H.	364F84
			L. H.	364F85
	With lever handle trim 1 3/4" Doors ED7401	With dogging	R. H.	364F90
			L. H.	364F91
		Less dogging	R. H.	364F92
			L. H.	364F93
9	SCREW PACKET No Outside Trim ED7400 For Active & Inactive Cases (4 each Sex Nuts & Bolts)	1 3/8" Door		329F75
		1 3/4" Door		269F91
		2 1/4" Door		270F01
	ED7400 (4 each Sex Nuts & Bolts)	1 3/4" Door		269F92
		2 1/4" Door		270F02
10	TOP ROD (regularly furnished)			393L13M672
11	TOP LATCH COVER			351F73
12	DRIVE RIVET			352F02
13	TOP ROD CONNECTOR SUB ASS'Y			351F98
14	ANCHOR			361F30
15	TOP LATCH SUB ASS'Y (complete top latch less cover)			351F85
16	TOP STRIKE (includes screws)			352F05
17	CROSSBAR Regularly 31 11/16" long, unless otherwise specified			141L59
18	*INACTIVE CASE SUB ASS'Y	With dogging	R. H.	269F73
			L. H.	269F74
		Less dogging	R. H.	269F75
			L. H.	269F76
19	WRENCH			123F53

*See page 8 for Inactive Case component parts list.

ITEM	PART NAME and DESCRIPTION			PART NO.
20	FLUSH BOTTOM STRIKE (includes screws and anchor)			361F91
21	REINFORCING TUBE Specify length			141L54
22	COVER only	With dogging	R. H.	269F33
			L. H.	269F34
		Less dogging		269F35
23	ACTIVE CASE only	With bottom rod		351F50
		Without bottom rod		351F51
24	SLIDE SUB ASS'Y			351F55
25	BUTTON			269F54
26	LEVER PIVOT			269F48
27	#59–040–187–05–0750 ROLLPIN			228F80
28	NYLINER			269F47
29	BUSHING			269F49
30	DOGGING DEVICE SUB ASS'Y			321F90
31	LEVER		R. H.	269F32
			L. H.	269F31
32	5/16–24 UNF–2A x 1 1/2" FLAT HEAD SOCKET MACHINE SCREW			261F31
33	TENON SUB ASS'Y			378F74
34	**10–32 x 7/16" PHIL. FLAT H'D UND'CUT MACH. SCREW			351F52
35A	SLIDE EXTENSION SUB ASS'Y For Grip or Pull Trim	1 3/4" Door		365F00
		2 1/4" Door		365F01
35B	For Lever Handle Trim – Specify hand	1 3/4" Doors only		365F03
36	BOTTOM LATCH only			351F86
37	#79–032–156–0937 ROLLPIN (in frame)			351F80
38	#79–032–156–0562 ROLLPIN (in latch)			228F68
39	LATCH LINK			351F87
40	BOTTOM LATCH BACKPLATE			351F88
41	SPRING			351F89
42	1/4–20 X 3/4" PHIL. BINDING UNDERCUT MACH. SCREW (Specify US19)			352F06
43	1/4–20 X 2" PHIL. OVAL HEAD TAPPING SCREW for Metal Doors			365F98
	#14 X 2 1/4" SLOTTED OVAL HEAD WOOD SCREW for Wood Doors			352F07
44	TOP LATCH only			351F79
45	#79–040–187–0875 ROLLPIN			284F97
46	TOP LATCH BACKPLATE			351F82
47	TOP LATCH SLIDE			351F83
48	SPACER			351F84
49	SEX NUT only	1 3/8" Door Thickness		101F73
		1 3/4" Door Thickness		101F74
		2 1/4" Door Thickness		101F75
50	THROUGH BOLT			270F11

**Apply grade EV Loctite (or equivalent) to threads.

ED7800 CONCEALED VERTICAL ROD

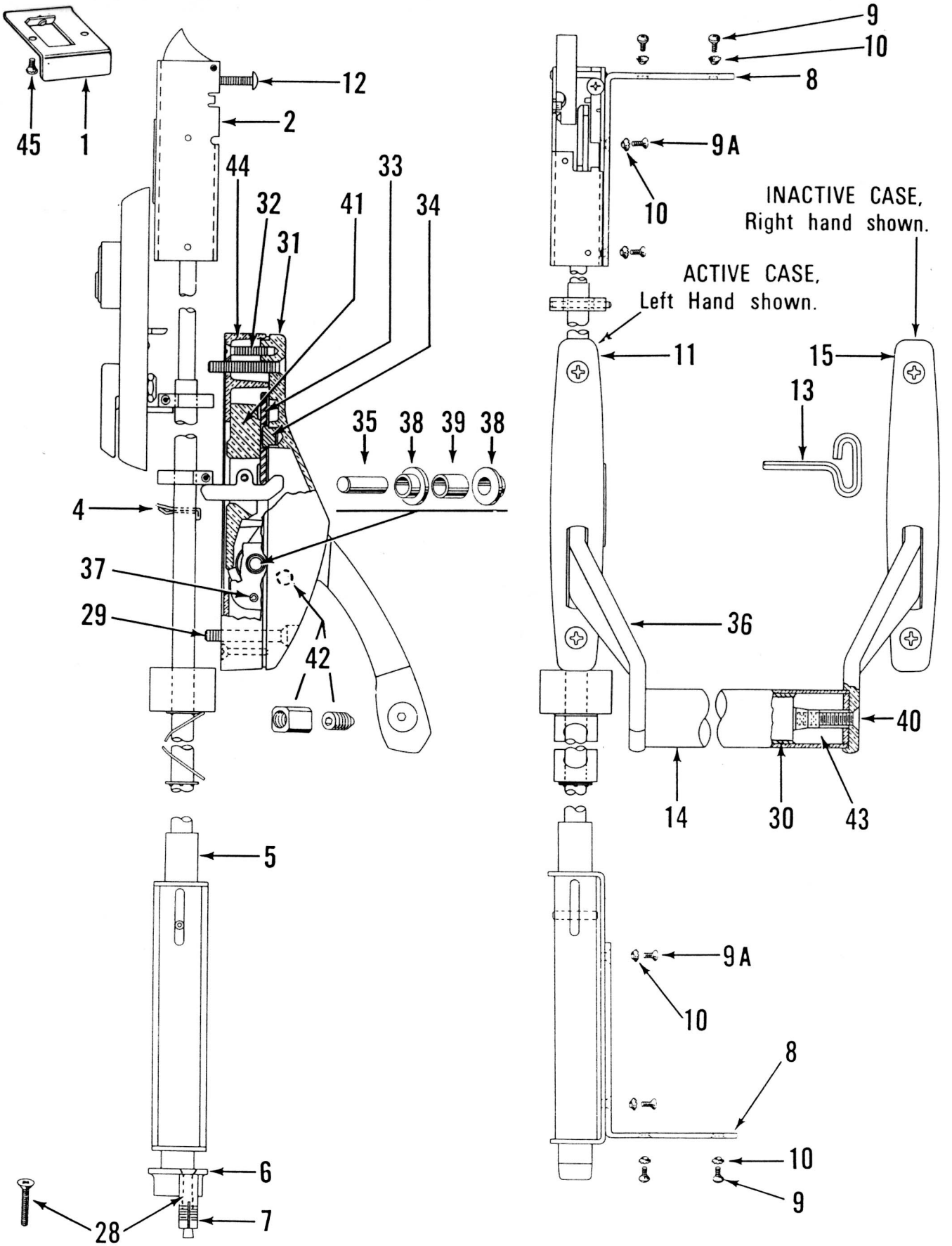

ED7800

ITEM	PART NAME and DESCRIPTION			PART NO.
1	TOP STRIKE SUB ASS'Y includes screws	Regular		183F85
		Reveal Depth	5 1/2" To 8"	213F10
			Under 5 1/2"	213F11
2	TOP LATCH SUB ASS'Y (includes top rod)	for door heights 6'4" to 8'6"		183F74
		for door heights 8'6" to 10'8"		183F75
4	COTTER PIN			269F04
5	LOWER BOLT SUB ASS'Y (includes bottom rod)			305F72
6	BOTTOM STRIKE (includes screws and anchors)			123F22
7	ANCHOR			361F30
8	MOUNTING BRACKET			122F18
9	#10-32 NF-2A X 7/16" PHILLIPS FLAT HEAD UNDERCUT MACHINE SCREW specify finish			351F52
9A	#10-32 NF-2A X 1/4" PHILLIPS OVAL HEAD UNDERCUT MACHINE SCREW			269F09
10	LOCK WASHER 82° external c'sink type			269F05
11	ACTIVE CASE SUB ASS'Y	With dogging	R. H.	291F52
			L. H.	291F53
		Less dogging	R. H.	291F54
			L. H.	291F55
12	#10-32 X 1 1/4" PHIL. TORX HEAD MACH. SCREW			282F35

ITEM	PART NAME and DESCRIPTION			PART NO.
13	WRENCH			123F53
14	CROSSBAR Regularly 31 11/16" long, unless otherwise specified			141L59
15	*INACTIVE CASE SUB ASS'Y	With dogging	R. H.	269F73
			L. H.	269F74
		Less dogging	R. H.	269F75
			L. H.	269F76
28	1/4-20NC-2A X 5/8" PHIL. FLAT HEAD MACH. SCREW			220F75
29	1/4-20NC-2A X 1 3/4" PHIL. OVAL HEAD MACH. SCREW			249F33
30	REINFORCING TUBE Specify length			141L54
31	COVER only	With dogging	R. H.	269F33
			L. H.	269F34
		Less dogging		269F35
32	#10-32 X 1" PHILLIPS FLAT HEAD MACHINE SCREW			291F57
33	STOP PLATE			291F49
34	BUTTON			291F54
35	LEVER PIVOT			269F48
36	LEVER		R. H.	269F32
			L. H.	269F31
37	#59-040-187-0750			228F80
38	BUSHING			269F49
39	NYLINER			269F47
40	5/16-24 UNF-2A X 1 1/2" FH SOCKET MACH. SCREW			261F31
41	SLIDE SUB ASS'Y			293F18
42	DOGGING DEVICE SUB ASS'Y			321F90
43	TENON SUB ASS'Y			378F74
44	CASE only. For active and inactive sub-assemblies			269F42
45	#8-32NC-2A X 3/8" PHILLIPS FLAT HEAD UNDERCUT MACHINE SCREW			269F08

*See page 8 for Inactive Case component parts list.

Component Parts for Inactive Case

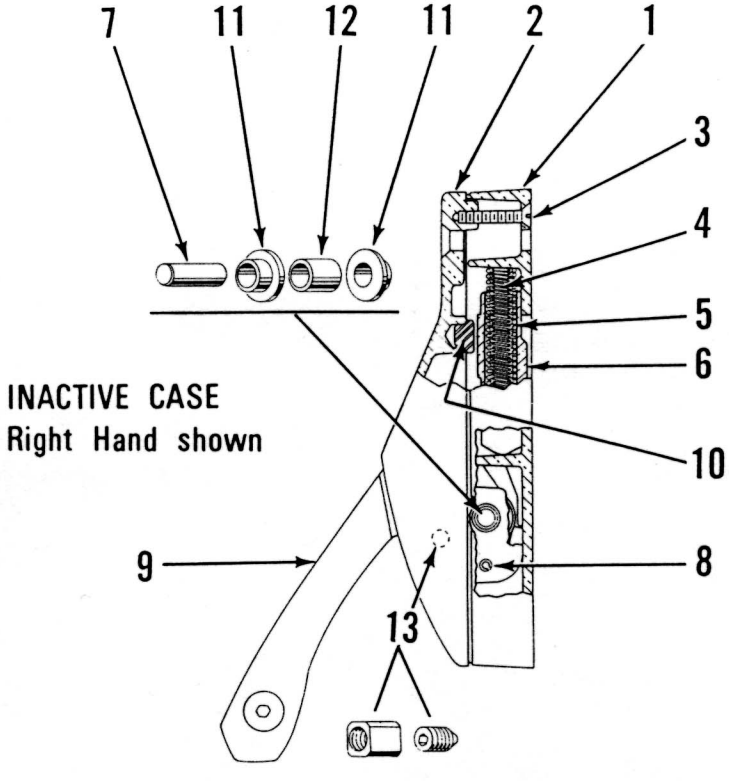

ITEM	PART NAME and DESCRIPTION			PART NO.
1	INACTIVE CASE only			269F42
2	COVER	With dogging	R. H.	269F33
			L. H.	269F34
		Less dogging		269F35
3	#10-32 X 1" PHILLIPS FLAT HEAD MACHINE SCREW			291F57
4	INNER SPRING			269F60
5	OUTER SPRING			269F57
6	SLIDE			269F41
7	LEVER PIVOT			269F48
8	#59-040-187-0750 ROLLPIN			228F80
9	LEVER		R. H.	269F32
			L. H.	269F31
10	BUTTON			269F54
11	BUSHING			269F49
12	NYLINER			269F47
13	DOGGING DEVICE			321F90

Outside Operators
0355, 0356, 0357, 0455, 0456, 0457

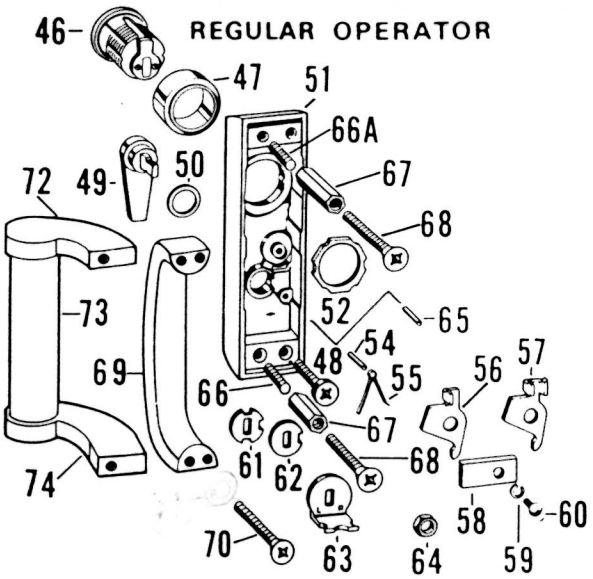

ITEM	PART NAME and DESCRIPTION		PART NO.
46	CYLINDER ASSEMBLY		As Cataloged
47	CYLINDER COLLAR		134F05
48	1/4–20 X 3/8" PHIL. BINDING HEAD MACHINE SCREW		352F06
49	HANDLE LEVER		122F64
50	SPACER WASHER (NYLON)		122F63
51	CASE		363F05
52	HEX NUT		129F84
54	ROLLPIN (#79–028–125–0500 ST'D)		228F51
55	SPRING–LOCKING LEVER		122F59
56	LOCKING LEVER for 4163, 4168, 693, 698		122F57
57	LOCKING LEVER for 4161, 691		122F56
58	PLATE		362F91
59	#10 LIGHT SPRING WASHER		306F07
60	#10–24 X 5/16" PHIL. ROUND HEAD MACHINE SCREW		306F06
61	LOCKING HUB for 4163, 693		122F61
62	LOCKING HUB for 4161, 4168, 691, 698		122F60
63	LIFTING LEVER		185F55
64	JAM NUT		184F94
65	ROLLPIN (#79–028–125–0343)		228F49
66	STUD		173F69
66A	STUD		140F52
67	NUT		362F49
68	SCREW		352F06
69	PULL SA		404F57
70	SCREW PACKET	for 1 3/4" dr. – 1/4–20 X 2 5/8" OHMS–PH	285F33
		for 2 1/4" dr. – 1/4–20 X 3 1/8" OHMS–PH	222F94
72	BRACKET TOP	R. H.	362F98
		L. H.	362F99
73	GRIP		328F80
74	BRACKET BOTTOM	R. H.	363F02
		L. H.	363F03

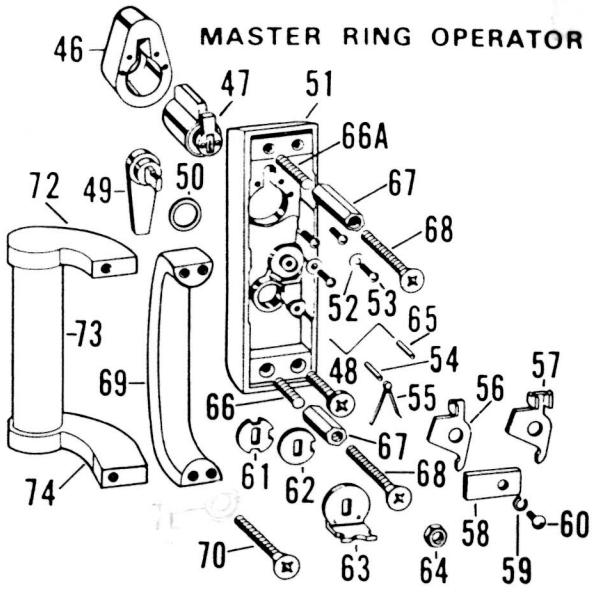

ITEM	PART NAME and DESCRIPTION		PART NO.
46	CYLINDER ASSEMBLY (for Master Ring Cyl.)		As Cataloged
47	MASTER RING CYLINDER		As Cataloged
48	1/4–20 X 3/4" PHILLIPS BINDING HEAD MACHINE SCREW		352F06
49	HANDLE LEVER		122F64
50	SPACER WASHER (NYLON)		122F63
51	CASE		363F07
52	WASHER		122F24
53	#6–32 X 5/8" ROUND HEAD MACHINE SCREW		268F84
54	ROLLPIN (#79–028–125–0500 ST'D)		228F51
55	SPRING–LOCKING LEVER		122F59
56	LOCKING LEVER for MR4163, MR4168, MR693, MR698		122F57
57	LOCKING LEVER for MR4161, MR691		122F56
58	PLATE		362F91
59	#10 LIGHT SPRING WASHER		306F07
60	#10–24 X 5/16" PHIL. ROUND HEAD MACHINE SCREW		306F06
61	LOCKING HUB for MR4163, MR693		122F61
62	LOCKING HUB for MR4161, MR4168, MR691, MR698		122F60
63	LIFTING LEVER		185F55
64	JAM NUT		184F94
65	ROLLPIN (#79–028–125–0343)		228F49
66	STUD		173F69
66A	STUD		140F52
67	NUT		362F49
68	SCREW		352F06
69	PULL SA		404F57
70	SCREW PACKET	for 1 3/4" dr. – 1/4–20 X 2 5/8" OHMS–PH	285F33
		for 2 1/4" dr. – 1/2–20 X 3 1/8" OHMS–PH	222F94
72	BRACKET TOP	R. H.	362F98
		L. H.	362F99
73	GRIP		328F80
74	BRACKET BOTTOM	R. H.	363F02
		L. H.	363F03

Outside Lever & Knob Trim

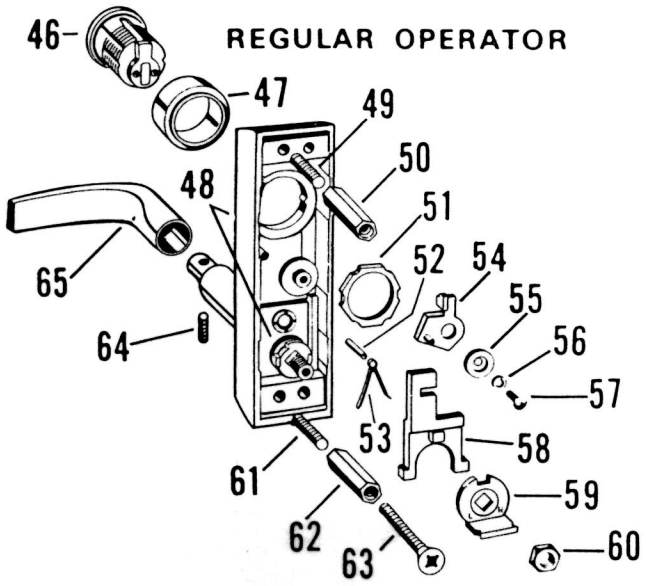

ITEM	PART NAME and DESCRIPTION		PART NO.
46	CYLINDER ASSEMBLY		As cataloged
47	CYLINDER COLLAR		134F05
48	CASE & TORQUE RELEASE	R.H.	364F38
	SUB ASSY	L.H.	364F39
		R.H.	364F36
		L.H.	364F37
49	STUD		140F52
50	NUT		173F72
51	HEX NUT		129F84
52	ROLLPIN		228F51
53	SPRING - LOCKING LEVER		122F59
54	LOCKING LEVER	for x455	365F53
		for x457	365F54
55	WASHER		364F22
56	#10 LIGHT SPRING WASHER		306F07
57	#10-24 X 5/16" PHIL ROUND HEAD MACH. SCREW		364F17
58	LOCKING SLIDE		364F27
59	LIFTING LEVER		364F30
60	JAM NUT		184F94
61	STUD		140F52
62	NUT		173F72
63	SCREW PACKET		363F67
64	SET SCREW		262F89
65	HANDLE LEVER	C4 / C4M	152F17
		D4 / D4M RHR	324F09
		D4 / D4M LHR	324F10
	KNOB	B5M	580F31
		G6M	580F30

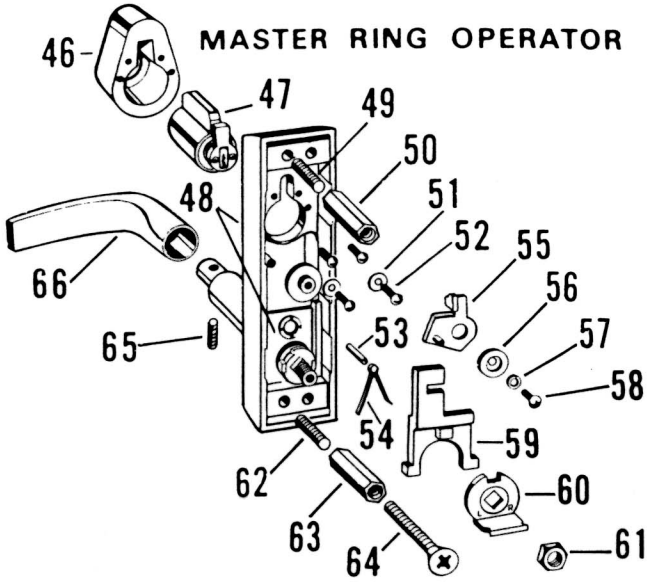

ITEM	PART NAME and DESCRIPTION		PART NO.
46	CYLINDER ASSEMBLY (for Master Ring C		As cataloged
47	MASTER RING CYLINDER		As cataloged
48	CASE & TORQUE RELEASE	R.H.	364F38
	SUB ASSY	L.H.	364F39
		R.H.	364F36
		L.H.	364F37
49	STUD		140F52
50	NUT		173F72
51	WASHER		122F24
52	#6-32 X 5/8" RHMS		268F84
53	ROLLPIN		228F51
54	SPRING - LOCKING LEVER		122F59
55	LOCKING LEVER	for x455	365F53
		for x457	365F54
56	WASHER		364F22
57	#10 LIGHT SPRING WASHER		306F07
58	#10-24 X 5/16" PHIL ROUND HEAD MACH. SCREW		364F17
59	LOCKING SLIDE		364F27
60	LIFTING LEVER		364F30
61	JAM NUT		184F94
62	STUD		140F52
63	NUT		173F72
64	SCREW PACKET		363F67
65	SET SCREW		262F89
66	HANDLE LEVER	C4 / C4M	152F17
		D4 / D4M RHR	324F09
		D4 / D4M LHR	324F10
	KNOB	B5M	580F31
		G6M	580F30

Metric Conversion Chart

TO CONVERT INCHES TO MILLIMETERS: MULTIPLY BY 25.4

INCHES:		METRIC:
Decimal	Fraction	Millimeters
.03125	1/32	.794
.0625	1/16	1.588
.09375	3/32	2.381
.125	1/8	3.175
.15625	5/32	3.969
.1875	3/16	4.763
.21875	7/32	5.556
.25	1/4	6.350
.28125	9/32	7.144
.3125	5/16	7.938
.343375	11/32	8.731
.375	3/8	9.525
.40625	13/32	10.319
.4375	7/16	11.113
.46875	15/32	11.906
.5	1/2	12.70

INCHES:		METRIC:
Decimal	Fraction	Millimeters
.53125	17/32	13.494
.5625	9/16	14.288
.59375	19/32	15.081
.625	5/8	15.875
.65625	21/32	16.669
.6875	11/16	17.463
.71875	23/32	18.256
.75	3/4	19.050
.78125	25/32	19.844
.8125	13/16	20.638
.6875	27/32	21.431
.875	7/8	22.225
.90625	29/32	23.019
.9375	15/16	23.813
.96875	31/32	24.606
1.0	1	25.40

TO CONVERT MILLIMETERS TO INCHES: MULTIPLY BY .0394

For more information regarding Corbin Russwin Locksets, Exit Devices, Door Controls and Key Systems, contact your authorized Corbin Russwin Distributor or Sales Representative.

In U.S.:
Corbin Russwin Architectural Hardware
1902 Airport Road
Monroe, NC 28110
Phone 800-543-3658
Fax 800-447-6714
www.corbin-russwin.com

In Canada:
Yale-Corbin Canada Ltd.
6940 Edwards Boulevard
Mississauga, ONT L5T 2W2
Phone 800-461-3007
Fax 800-461-8989
www.yalecorbin.on.ca

The ASSA ABLOY Group is the world's leading manufacturer and supplier of locks and associated products, dedicated to satisfying end-user needs for security, safety and convenience.

Corbin Russwin and Design® is a registered trademark of Corbin Russwin Inc. Other products brand names may be trademarks or registered trademarks of their respective owners and are mentioned for reference purposes only. These materials are protected under US copyright laws. All contents current at time of publication. Corbin Russwin, Inc. reserves the right to change availability of any item in this catalog, its design, construction, and/or its materials.