Corbin Russwin™

ED4000 Series
ED5000 Series
Pushbar Exit Device

Parts and Service Manual

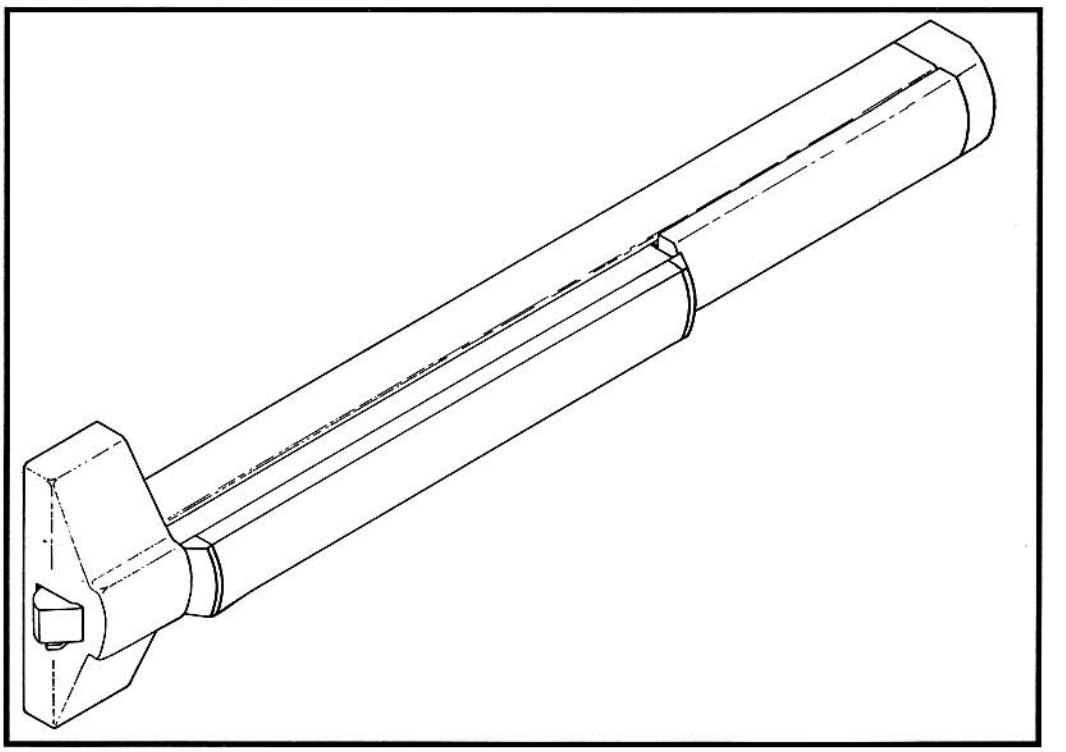

Corbin Russwin Architectural Hardware
Berlin, CT 06037 USA

Introduction

- All fire rated components must be used only on fire rated exit devices. Doing otherwise would violate any type of product labeling or listing.
- Refer to the installation instructions for complete installation.
- Machine screws are provided for steel reinforced doors, wood screws are provided for wood door applications. In addition, sex nuts and bolts are provided for fire rated devices and are optional for non-rated devices. It is recommended that sex nuts and bolts be used for all exit device applications. This will improve the performance and extend the life of the product.
- In order to simplify the ordering procedure and maintain regulatory compliance, parts are only available as listed.
- For various special applications, optional parts are shaded on parts lists and diagrams.
- To order parts, use the appropriate Part Number and specify Finish (fin) as directed. For example, to order ten mullion stabilizer kits to match a Duranodic application, use the following configuration:

Quantity	Part Number	Finish	Hand
10	**653F11-1**	**695**	

For assistance, contact your authorized Corbin Russwin distributor or Corbin Russwin directly at the address on the back cover.

Table of Contents

Device Series

ED4200, ED5200, ED5200A - Rim Device 2

ED4400, ED5400, ED5400A - Surface Vertical Rod Device 4

ED5600, ED5600A - Mortise Device 6

ED4800, ED5800A - Concealed Vertical Rod Device 8

Main Bar Components 10

Inactive Bar Components 12

Trim Parts

x7 14

x7M 16

x8 18

F2, F2M, F3, F3M, F4 20

T13 22

T13M 24

T14, O14 26

Cross Reference Listing 28

Accessories 36

Mullions 38

Service

General Troubleshooting 39

Handing Instructions 40

Surface Vertical Rod Adjustment 42

Concealed Vertical Rod Adjustment 43

ED4200, ED5200 Rim Exit Device

ITEM	PART NO.	SPECIFY	DESCRIPTION
1			Active Head
	650F37-8		ED4200
	650F35-8		ED5200
	650F36-8		ED5200A
2			Active Head Cover
	650F03	fin	ED4200
	650F00	fin	ED5200(A)
30			Strike Packet
	650F31-8	622	ED4200
	650F29-8	622	ED5200
	650F30-8	622	ED5200A

ED4200, ED5200(A) Rim Exit Device

ED5200(A) fully illustrated.
See inset for **ED4200**.

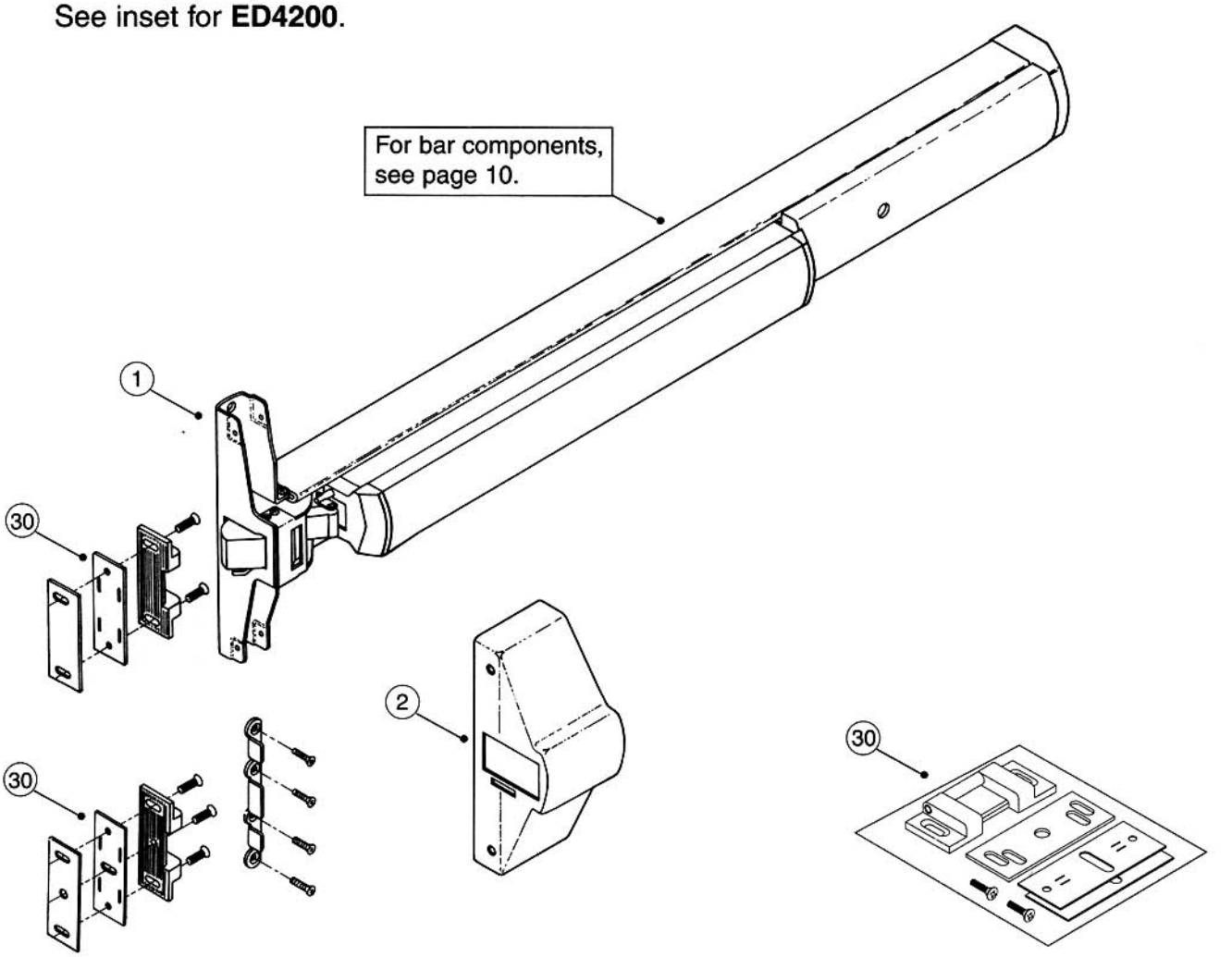

ED4200

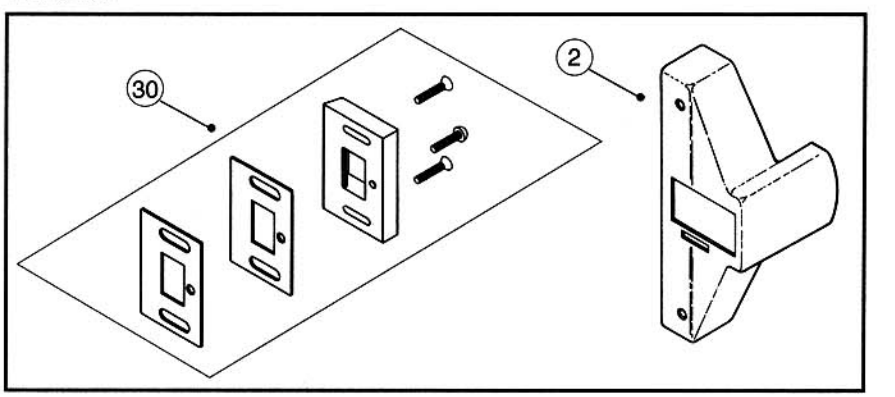

ED4400, ED5400(A) Surface Vertical Rod Exit Device

ITEM	PART NO.	SPECIFY	DESCRIPTION
1			Active Head
	650F40-8		ED4400 RHR (field reversible)
	650F41-8		ED4400 LHR (field reversible)
	650F38-8		ED5400(A) RHR (field reversible)
	650F39-8		ED5400(A) LHR (field reversible)
2			Cover, Active Head
	650F04	fin	ED4400
	650F01	fin	ED5400(A)
23	650F34	fin	Screw Packet, Cover #8–32 x 5/16" FHUM-PH (4)
31			Top Strike Packet contains:
	650F54-8	622	Strike Shims Locking Plate Mounting Screws
32	650F64	fin	Cover, Top & Bottom Latch
33			Top Latch
	650F55-8		ED4400, ED5400
	650F56-8		ED5400A
34	650F57-8		Mounting Packet contains: Top and Bottom Latch Plates & Screws Top Rod End Pin Cotter Pin Bottom Bolt Bottom Strike Top and Bottom Latch Mounting Screws #10–24 x 1/4" PHM-PH (6) #1/4–20 x 3/4" FHM-PH (4) Drill Jig for Rod Pin

ITEM	PART NO.	SPECIFY	DESCRIPTION
35			Bottom Bolt Case
	650F58-8		ED4400, ED5400
	650F59-8		ED5400(A)
36	650F60	fin	Top Rod
37	649F99	fin	Bottom Rod & End Pin Assembly
38	650F63	fin	Rod Guide Cover
39	650F62	fin	Rod Guide Packet Includes: #8–32 x 1/4" FHM-PH (4)
40	650F97-8		Pillow Block Packet (ED4400 only) contains #10–24 x 1 1/4" FHPM-PH Screws (3) Pillow Block (1)
41	654F21-8		Latch Packet with #14 x 1 1/4" flat Head Wood Screws (ED4400, ED5400 only)

ED4400, ED5400(A) Surface Vertical Rod Exit Device

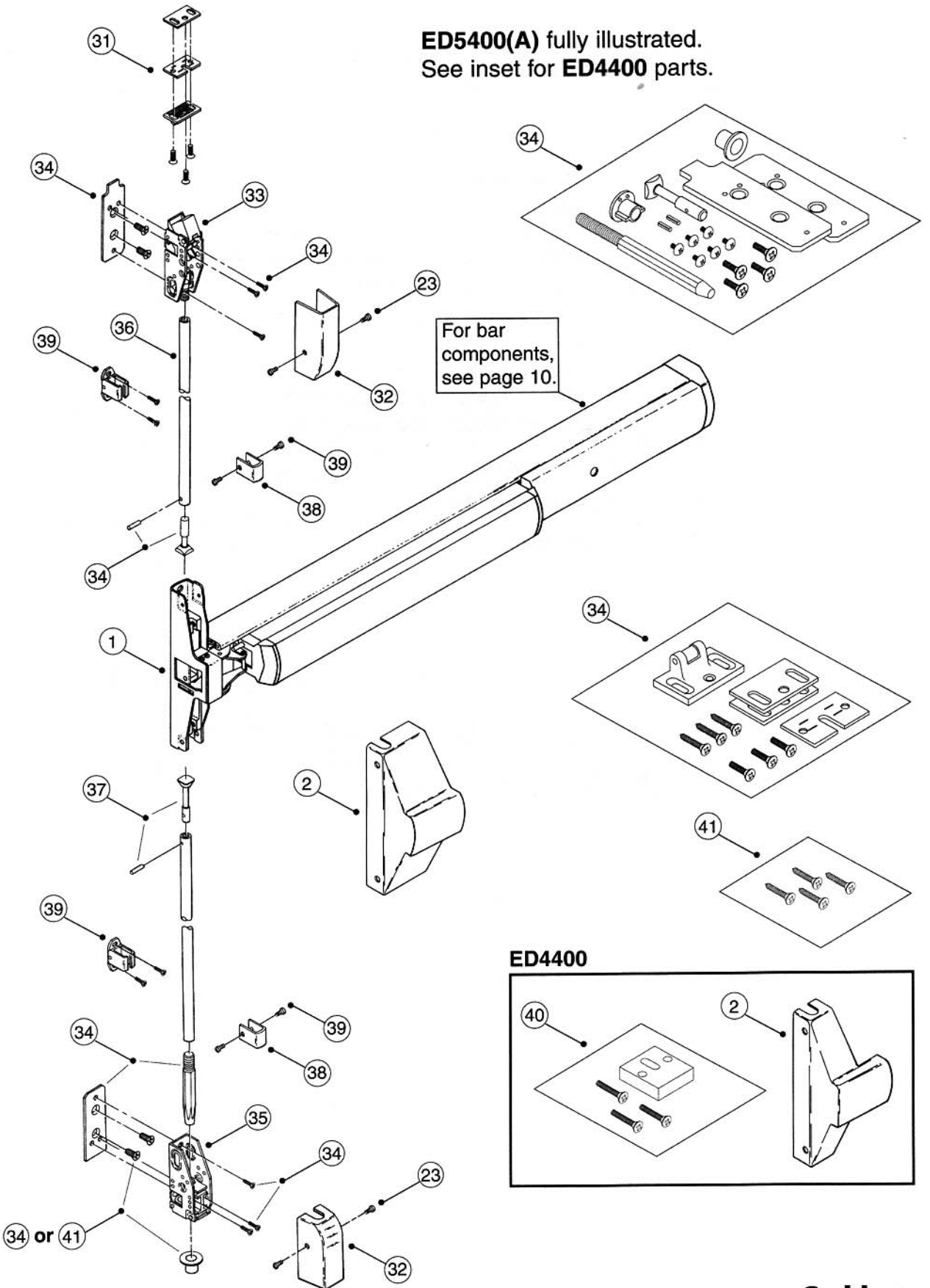

ED5600(A) Mortise Exit Device

ITEM	PART NO.	SPECIFY	DESCRIPTION
1	650F42-8		Active Head
2	650F02	fin	Cover, Active Head
42			Mortise Lock Body
	650F66-8 RR		ED5650K, ED5657K (knob RHR)
	650F66-8 LR		ED5650K, ED5657K (knob LHR)
	650F67-8 RR		ED5650L/T, ED5657L/T (lever/thumbpiece RHR)
	650F67-8 LR		ED5650L/T, ED5657L/T (lever/thumbpiece LHR)
	650F68-8 RR		ED5610K, ED5655K (knob RHR)
	650F68-8 LR		ED5610K, ED5655K (knob LHR)
	650F69-8 RR		ED5610L, ED5655L (lever RHR)
	650F69-8 LR		ED5610L, ED5655L (lever LHR)
	650F70-8 RR		ED5610T, ED5655T (thumbpiece RHR)
	650F70-8 LR		ED5610T, ED5655T (thumbpiece LHR)
43	650F06	fin	Armored Front
44	429F41	fin	Screw Packet for Armored Front
45	650F65-8	622	Strike Packet

ED5600(A) Mortise Exit Device

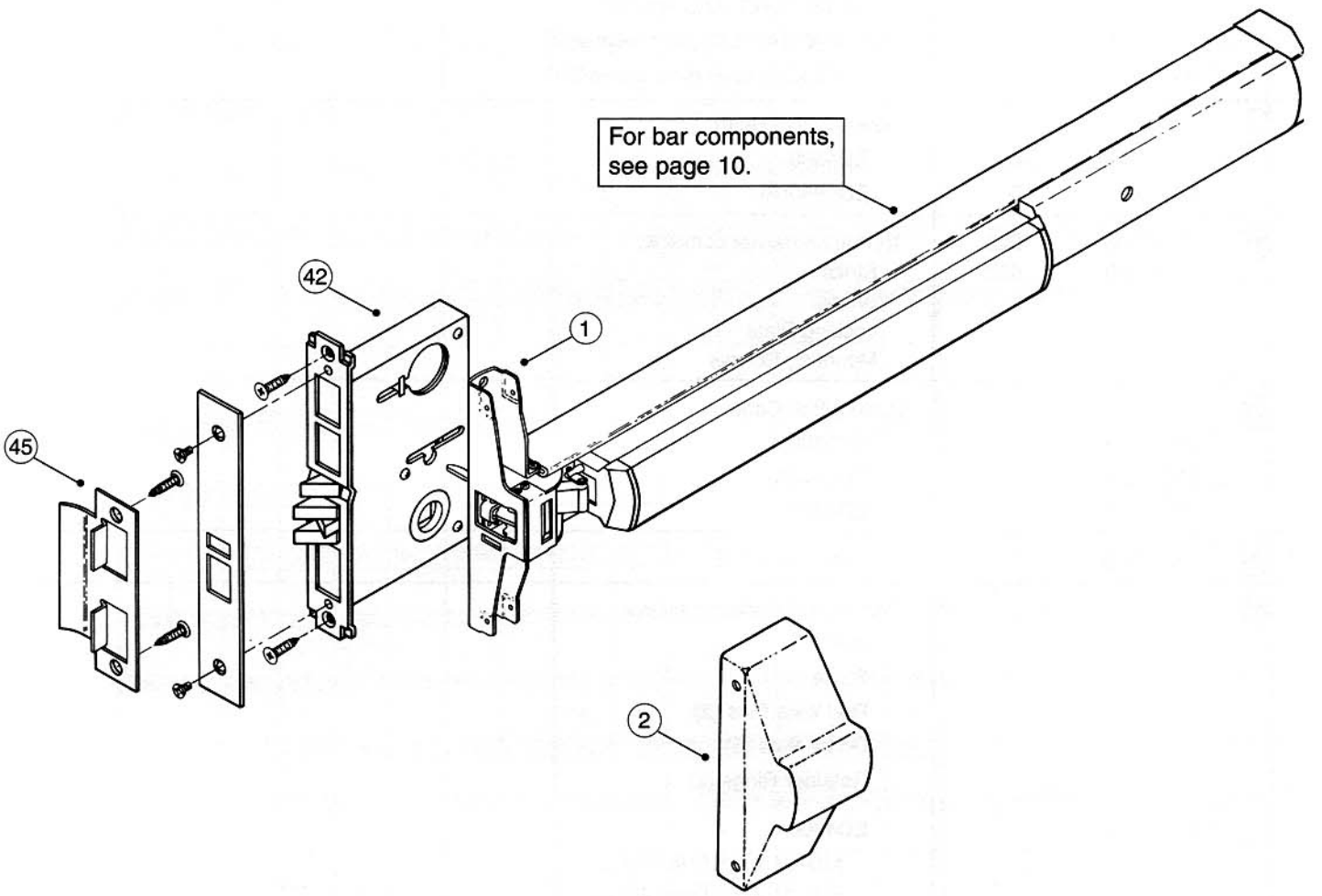

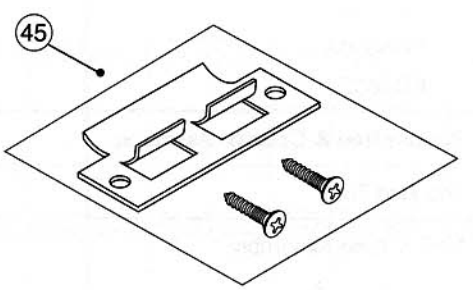

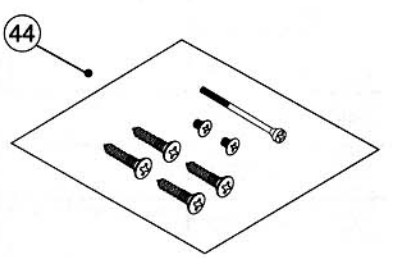

ED4800, ED5800(A) Concealed Vertical Rod Exit Device

ITEM	PART NO.	SPECIFY	DESCRIPTION
1			Active Head
	650F45-8		ED4800 RHR (field reversible)
	650F46-8		ED4800 LHR (field reversible)
	650F43-8		ED5800(A) RHR (field reversible)
	650F44-8		ED5800(A) LHR (field reversible)
2			Cover, Active Head
	650F05	fin	ED4800
	650F02	fin	ED5800(A)
31	650F54-8	622	Top Strike Packet contains:
	650F55-8	622	Strike
			Shims
			Locking Plate
			Mounting Screws
35			Bottom Bolt Case
	650F74-8		ED5800
	650F75-8		ED5800A
	650F76-8		ED4800
36	650F80-8		Top Rod
46			Bottom Bolt Packet contains:
			Bolt
			Strike
			Rod Yoke Pins (2)
			Cotter Pins (5)
			Retainer Rings (2)
	650F77-8		ED4800
			#10–24 x 1/2" FHM-PH (2)
			#10–24 x 1/2" RHM-PH (4)
	650F78-8		ED5800(A)
			#10–24 x 1/2" FHM-PH (14)
47			Top Latch & Bracket Assembly
	650F71-8		ED5800
	650F72-8		ED5800A
	650F73-8		ED4800
49	650F79-8		Bottom Rod & Coupler Assembly
51	650F81-8		Top Rod Tube
52	650F82-8		Rod & Yoke Assembly
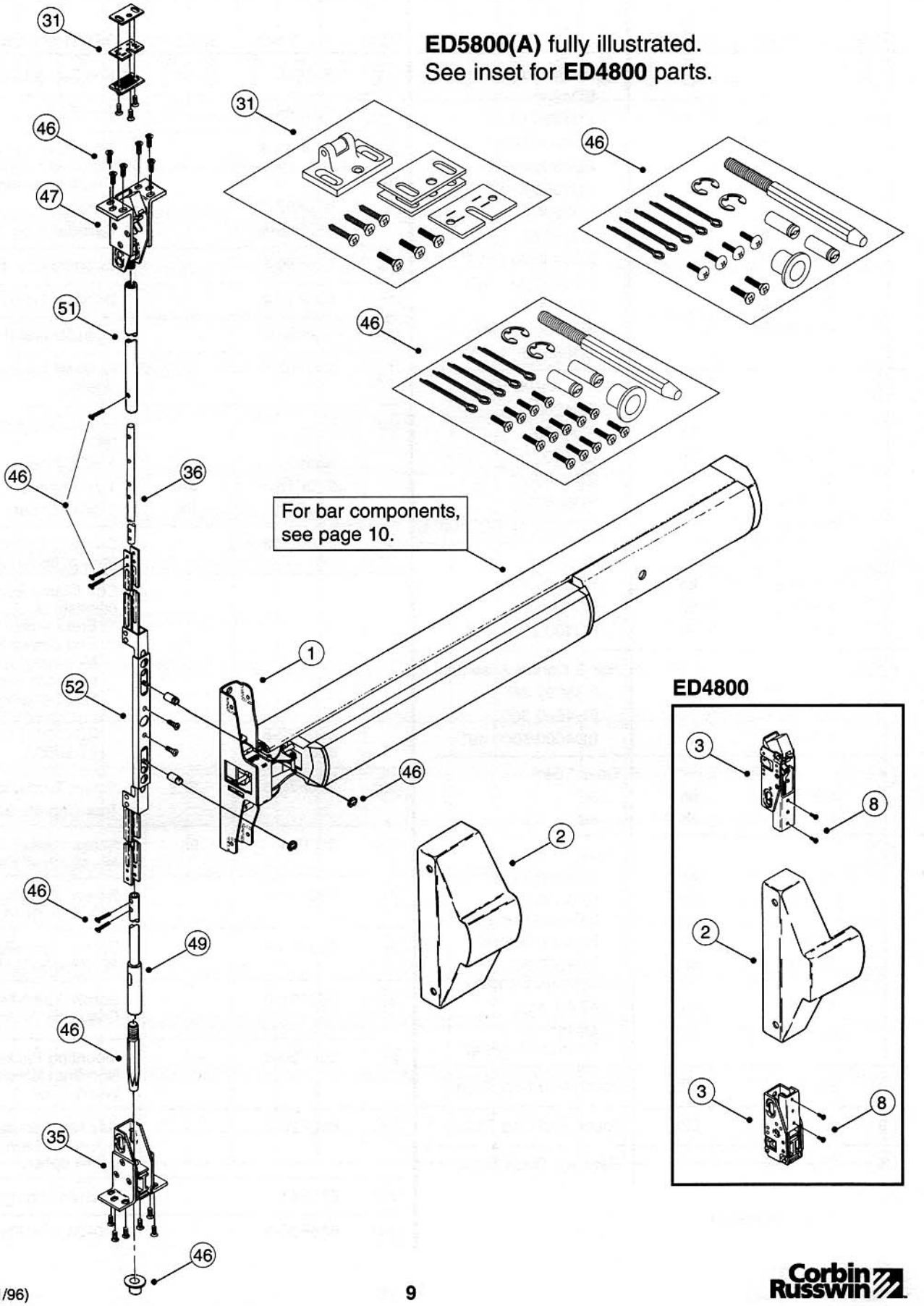
ED4800, ED5800(A) Concealed Vertical Rod Exit Device