Corbin Russwin®

Door Closers

DC3000 Series

An ASSA ABLOY Group company

ASSA ABLOY

DC3000 Series

Applications

The mid-priced, cost-effective choice for high-traffic situations. The DC3000 Series Door Closers fulfill security and life safety requirements by ensuring reliable latching for access control and fire code compliance, along with ease of operation and precise adjustability for barrier-free code compliance. Ideal for virtually all door openings and draft conditions in both new construction and renovations, including:

- Schools and universities
- Health care
- Government
- Commercial and industrial
- Office and retail
- Transportation and utilities
- Hotels and conference centers
- Religious

Advantages

- Meets or exceeds ANSI A156.4 Grade 1 requirements
- Compliance with building and barrier-free codes
- Up to full 180° door opening
- One-piece seamless steel spring tube seals in hydraulic fluid
- Tapered valves allow precise adjustment
- Cast iron body
- QUIK-INSTALL™ mounting bracket speeds installation, reducing cost and errors
- Five-year limited warranty
- UL10C, UBC

Applications	2
Features	3 & 4
Mountings	5 & 6
Door Closer Arms	7 & 8
Mounting Brackets	9
Brackets and Covers	10
Size and Handing	11
How to Order	12
Quick Codes, Paint	13
Helpful Terms	14
How to Specify	15

This catalog can be found on the Internet at the Corbin Russwin website at: www.corbinrusswin.com

Overview of Features

Features	DC3200 Closers
Spring power	Multi Sized; Adjustable 1-6
Latching speed valve	Standard
Closing speed valve	Standard
Backcheck intensity valve	Standard
Delayed action valve	Optional
Parallel arm mounting	Optional
Top jamb mounting	Optional
Hold open	Optional
Sex nuts and bolts (SNBs)	Optional
Corrosion protection	Optional
Full cover	Standard
Slim cover	Optional
Five-year warranty	Standard
Heavy-duty regular arm	Optional
Heavy-duty parallel arm	Optional
Backstop arm	Optional

Finishes

Old Designation	Description	Specify
USP	Primed	600
SBL	Silver Aluminum	689
LBL	Dark Bronze	690
DBL	Light Bronze	691
FBL	Black	693
GBL	Satin Brass	696

Plated finishes available on arms and full cover* or full metal cover.

US3	Bright Brass	605
US4	Satin Brass	606
US9	Bright Bronze	611
US10	Satin Bronze	612
US26	Bright Chromium Plated	625
US26D	Satin Chromium Plated	626

For split finish of closer cover and arm, specify cover finish first, then arm finish (e.g., DC3200 x 625 x 689).

*Full cover available in 605, 606, 625 and 626 only.

Spring Power
Multi-sized; fully adjustable sizes 1 through 6.

Handing
Non-handed.

Body
Cast iron case with seamless cold headed steel spring tube.

Arm
Standard: heavy-duty forged steel.
Arms options pages 7 & 8.

Spindle
Cold headed heat-treated steel.

Piston
Precision machined, heat-treated steel.

Springs
Chrome silicon wire.

Valves
Latching speed valve standard.
Closing speed valve standard.
Backcheck intensity valve standard.
Delayed action valve optional. Delayed action preset for 20 seconds. Between 90° and 70° for all mounting. To order specify M71.

Seals
"O" rings.

Fluid
Standard: high lubricity extreme temperature hydraulic fluid.

Degree of Opening
Up to full 180° opening standard for regular, top jamb and parallel arm mountings, conditions permitting.

Power Adjustment Arm Bracket
15% adjustment standard.

Cover
Standard: non-metallic full cover.
Optional: slim cover; specify M76.

Mountings
Standard: regular and top jamb.
Optional mountings available; see Mountings, page 6.

Mounting Bracket
QUIK-INSTALL™ mounting bracket standard.

Fasteners
Standard: self drilling screws.
Optional: sex nuts and bolts (SNBs); specify M54.

Corrosion Protection
Painted protective coating on all metal surfaces for use in corrosive environments.
To order specify M75.

Warranty
Five-year limited warranty. Refer to Corbin Russwin price book for details.

Certification/Compliance

Barrier-Free Code Compliance
The DC3000 Series Door Closers listed below conform to the 5 lbf. maximum door opening force requirement for non-fire-rated interior hinged doors, according to:

Americans with Disabilities Act (ADA)
Complies with the Accessibility Guidelines for Buildings and Facilities, Section 4.13.11.

ANSI
Meets A156.4, Grade 1.
Meets A117.1.

UL/ULC/UL10C
Listed for fire and cycle requirements.

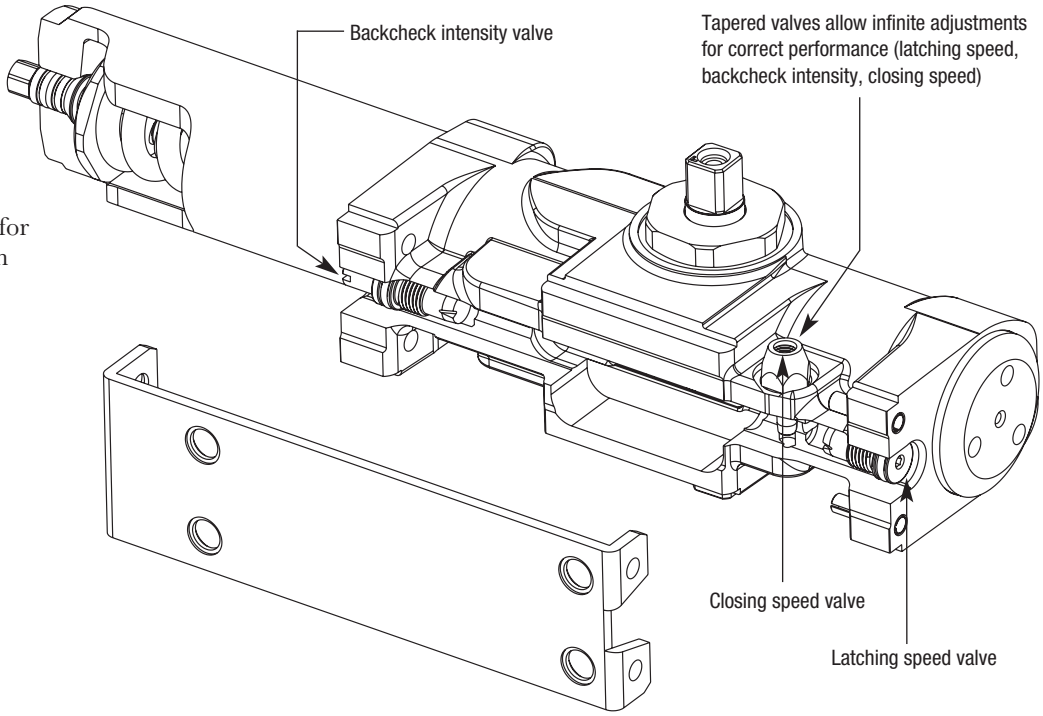

DC3200 Regular Arm Mounting

- Most common mounting, providing the greatest closing efficiency
- Closer is mounted on the pull side, with the arm perpendicular to the face of the door
- Arm bracket is attached to the door frame

DC3210 Parallel Arm Mounting

- Allows inside application of closer on out-swinging doors
- Closer is mounted on the push side, with the arm parallel to the face of the door
- Arm does not project from the opening

DC3220 Top Jamb Mounting

- Accommodates reveals up to 3-1/4" (83mm)
- Closer is mounted on the push side, with the arm perpendicular to the face of the door
- Arm bracket is mounted on the door
- Minimum 1-3/4" (44mm) top jamb required

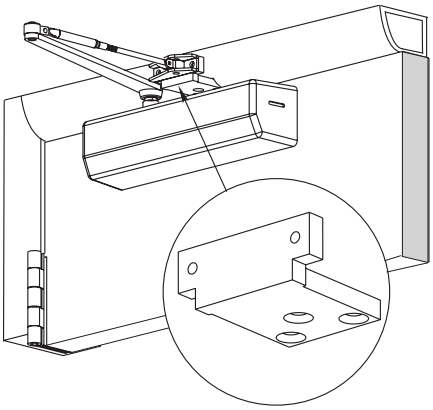

Regular Arm Mounting with Mortise Arm Bracket
Used on inadequately reinforced frames, such as those with bull nose trims.

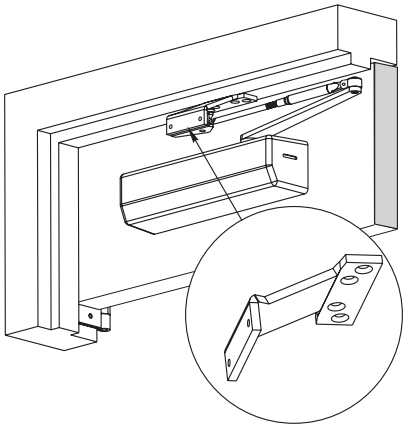

Parallel Arm with Offset Angle Bracket Mounting
Allows parallel arm mounting when used with an overhead door holder.

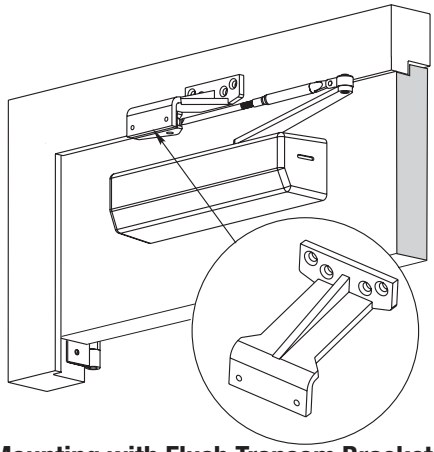

Parallel Arm Mounting with Flush Transom Bracket
Allows parallel arm mounting on flush transom applications.

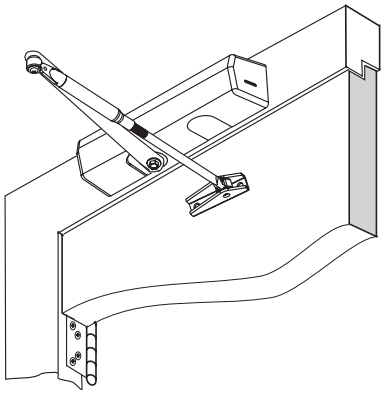

Top Jamb Flush Transom Mounting
Closer is top jamb mounted on the push side: arm is attached to the door.

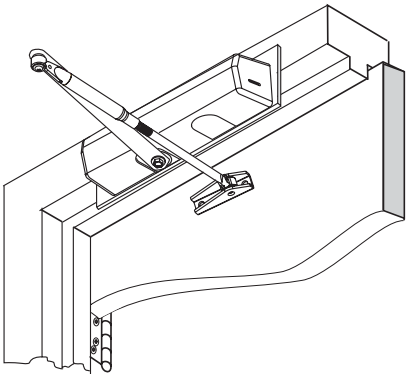

Narrow Frame Mounting
For use when the frame is too narrow for a normal top jamb or top jamb track mounting.

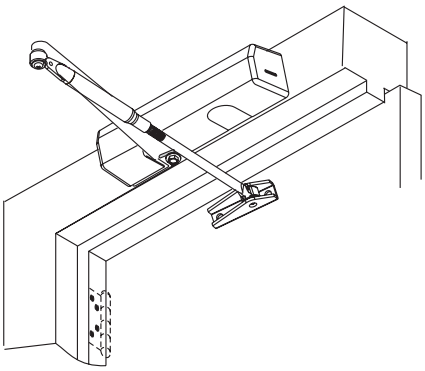

Top Jamb Deep Reveal Mounting
For reveals greater than 3-1/4" (83mm), up to 7-1/4" (184mm).

540F10
(Non-Hold Open)

540F12
(Hold Open)

Regular Arm

- Used with regular arm mounting (pull side) and top jamb mounting (push side)
- Non-Hold Open arm standard on the DC3200
- Hold Open arm optional, specify closer x A1*

597F52
(Non-Hold Open)

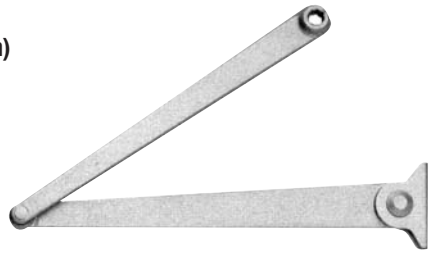

Heavy-Duty Regular Arm

- Recommended for high-use, high-abuse environments
- Tamper-resistant, solid forged steel riveted arm
- Mounted on pull side
- Not available in plated finishes
- Optional on DC3200 closer, specify closer x A10

540F10 x 188F41
(Non-Hold Open)

540F12 x 509F49
(Hold Open)

Parallel Arm

- Mounted on push side
- Non-Hold Open arm combines regular arm with parallel arm mounting bracket
- Hold Open arm combines regular hold open arm with parallel arm mounting bracket
- Non-Hold Open arm standard on the DC3210
- Hold Open arm optional, specify closer x A1*

*Not allowed by code on fire doors.

540F11
(Non-Hold Open)

540F13
(Hold Open)

Top Jamb

- Used with top jamb mounting (push side); for reveals up to 3-3/4" (95 mm)
- Non-Hold Open arm standard on the DC3220
- Hold Open arm optional, specify closer x A1*

489F70
(Non-Hold Open)

489F69
(Hold Open)

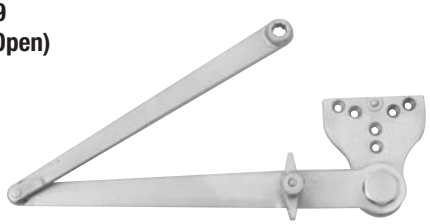

Heavy-Duty Parallel Arm

- Recommended for high-use, high-abuse environments
- Tamper-resistant, solid forged steel riveted arm
- Mounted on push side
- Not available in plated finishes.
- Optional on DC3210
- Non-Hold Open arm, specify closer x A3
- Hold Open arm, specify closer x A2*. (Hold-open range 85° to 110°)

566F33
(Non-Hold Open)

566F34
(Hold Open)

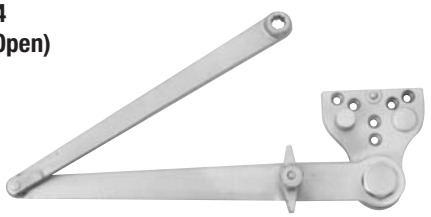

Heavy-Duty Reversible Backstop Parallel Arm

- Recommended for high-use, high-abuse environments
- Tamper-resistant, solid forged steel riveted arm (mounted on push side)
- Field-reversible steel lug restricts degree of opening to protect door, wall and hardware
- Requires both backcheck valves on closer
- Shipped standard as left hand. Handing can be reversed in the field
- Not available in plated finishes
- Optional on DC3210
- Non-Hold Open arm, specify closer x A4. Door stop range 85° to 110°
- Hold Open arm, specify closer x A5*. Door stop/hold open range 85° to 110°

Specify finish when ording arms. *Not allowed by code on fire doors.

188F03

QUIK-INSTALL™ Mounting Bracket

- Standard on all closers
- Reduces installation time
- Ensures correct mounting
- Bracket is first mounted to door or frame, then closer is attached
- Bracket size: 1-3/4" (44mm) (vertical) x 6" (152mm) (horizontal)
- Hole spacing: 1" (25mm) (vertical) x 4-5/16" (110mm) (horizontal)

244F17

Mortise Arm Bracket for Regular Arm Mounting

- For regular arm mounting where frame requires reinforcement, i.e., on frames with bull nose trim
- Not available in plated finishes
- Specify closer x M84

188F41

Parallel Arm Non-Hold Open Bracket

- Converts regular arm to parallel arm closer
- Standard with parallel arm mounting
- Packed with five screws and 691F78 spacer

509F49

Parallel Arm Hold Open Bracket

- Converts regular arm hold open to parallel arm hold open closer
- Standard with parallel arm hold open mounting

188F62

Parallel Arm Offset Bracket

- Required when parallel arm is used in conjunction with an overhead door holder
- Specify closer x M83

188F63

Parallel Arm Flush Transom Bracket

- Required when parallel arm mounting is used on a flush transom application
- Not available in plated finishes
- Specify closer x M82

Specify finish when ordering parts.

Drop Plate

Permits parallel arm or top jamb mounting on door when top rail is too narrow to install closer in the regular manner. Minimum 2" (51mm) top rail required. To order separately, specify Part No. x Finish.

Closer Series	Drop Plate	
	With Slim Cover	With Full Cover
DC3210	188F65	597F58
DC3220	188F65	188F65

Maximum Power

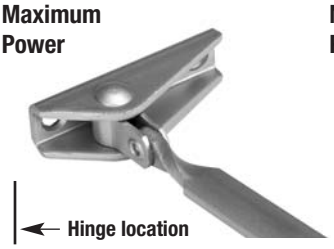

Normal Power

Power Adjustment Arm Bracket

- Standard on all closers without hold open, except heavy-duty and track type
- In regular arm or top jamb mounting, bracket may be reversed to increase closing power 15%

447F14

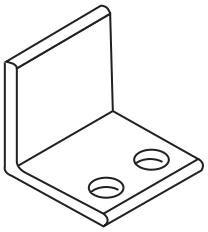

Angle Support Bracket and Spacer

- Available separately for mounting of A2, A3, A4 and A5 heavy-duty arms on narrow frame or soffit conditions
- Specify closer x M85

597F78

Full Cover

- Standard on all DC3000 series door closers
- Completely covers closer body
- Non-handed
- Dimensions: 11-5/8" (295mm) x 3" (76mm) x 2-3/4" (70mm) deep
- Available in painted and some plated finishes

387F40
(188F19 Spindle Cap and Screw)

Slim Cover

- Optional on all DC3000 Series Door Closers
- Cap covers bottom of spindle
- Non-handed
- Dimensions: 11-5/8" (295mm) x 2" (51mm) x 2-3/4" (70mm) deep
- To order specify closer x M76
- Available in painted finishes only

Factors in Determining Closer Size

1- Weight and Height of Door

Doors vary in weight from light hollow-core wood doors to heavy metal doors. Door sizes listed in the chart are based on doors of standard weight and height. Extra-light or extra-heavy weight or unusual height must be compensated for.

2 - Draft and Wind Conditions

Draft and wind conditions are perhaps the most important factors to consider in determining the closer size required. Sizes listed in the chart apply to normal conditions. Stairwells, air conditioning, building construction, and door location can cause strong draft and wind conditions; these may necessitate adjusting spring power to a larger size.

3 - Code Compliance

A multi-sized, fully adjustable closer such as the DC3200 closer provides the greatest flexibility in balancing barrier-free access, security and life safety codes. However, when a manual closer is installed and adjusted to comply with ADA or any other reduced opening force requirements, it may no longer have sufficient power to close and latch the door reliably.

Recommended Door Closer Sizes

	Size of Door			Recommended Adjusted Closer Size
Mounting	**Interior**	**Exterior In-swinging**	**Exterior, Out-swinging**	
Regular or Top Jamb	2'4"	–	–	1
	3'0"	–	–	2
	3'6'	2'6"	3'0"	3
	4'0"	3'0"	3'6"	4
	4'6"	3'6"	4'0"	5
	5'0"	4'0"	4'6"	6
Parallel Arm	2'4"	–	–	1
	2'6"	–	–	2
	3'0'	–	2'6"	3
	3'6"	–	3'0"	4
	4'0"	–	3'6"	5
	4'6"	–	4'0"	6

Handing

Refers to the direction a door swings; always determined from the outside of the door.

Regular Mounting

Door: left hand
Closer: left hand pull side

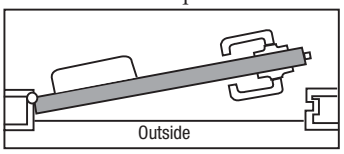

Door: right hand
Closer: right hand pull side

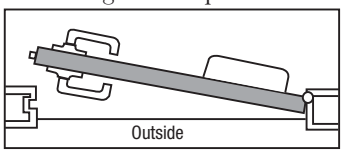

Parallel Arm Mounting

Door: left hand reverse bevel
Closer: right hand push side

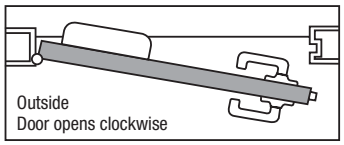

Door: right hand reverse bevel
Closer: left hand push side

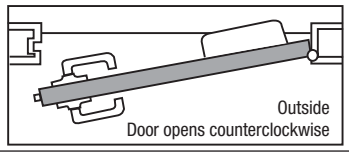

Top Jamb Mounting

Door: left hand reverse bevel
Closer: right hand push side

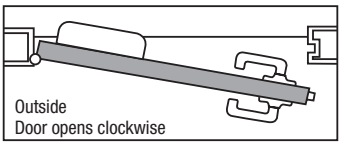

Door: right hand reverse bevel
Closer: left hand push side

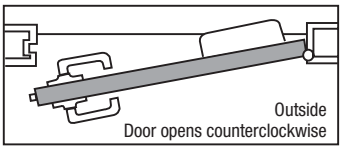

ANSI A156.4 Certified Closer Cross Reference

ANSI Number	Function	Series	PT 4A 15% Power Adjustment	PT 4B 35% Power Adjustment	PT 4C 50% Power Adjustment	PT 4D Adjustable Backcheck	PT 4F Delayed Action PT	4G Dead Stop PT	4H Fully Adjustable
CO2011 (PT1)	Hinge Side Mounting	DC3200	S	S	S	S	O	N/A	S
CO2051 (PT1)	Hinge Side Mounting Holder Arm	DC3200-A1	S	S	S	S	O	N/A	S
CO2021 (PT1)	Parallel Arm Mounting	DC3210	S	S	S	S	O	O	S
CO2061 (PT1)	Parallel Arm Mounting Holder Arm	DC3210-A1	S	S	S	S	O	O	S
CO2041 (PT1)	Top Jamb Mounting	DC3220	S	S	S	S	O	N/A	S
CO2081 (PT1)	Top Jamb Mounting Holder Arm	DC3220-A1	S	S	S	S	O	N/A	S
CO2191 (PT1)	Drop Plate for Frames or Narrow Top Rail Doors	DC3220 w/188F65	S	S	S	S	O	N/A	S
CO2201 (PT1)	Drop Plate for Parallel Arm Mounting on Narrow Top Rail Doors	DC3210 w/188F65 or 597F58	S	S	S	S	O	O	S

ANSI Performance Requirements: (PT 1)- 2,000,000 cycles
N/A = not available S = standard O= option available

Ordering Examples

Stock Order

Quantity	Series/ Mounting Size	Finish
50	**DC3200**	**689**

Contract Order

Quantity	Series/ Mounting Size	Arm	Finish	Hand	Door Thickness	Misc. Options
150	**DC3220**	**A1**	**690**	**RH**	**D138**	**M54**

Series/Mounting/Size

Description	Mounting	Specify
DC3200 Closers Multi-sized; full adjustability from size 1-6	Regular Arm	DC3200
	Parallel Arm	DC3210
	Top Jamb	DC3220

Arm

Description	Specify
Regular non-hold open	(standard)
Hold open	A1*
Heavy-duty parallel with hold open	A2*
Heavy-duty parallel non-hold open	A3
Heavy-duty backstop non-hold open	A4
Heavy-duty backstop with hold open	A5*
Heavy-duty regular non-hold open	A10

* Hold Open arms cannot be used on fire doors.

Handing

Hand	Specify
Right Hand/Left Hand Reverse	RH
Left Hand/Right Hand Reverse	LH

Door Thickness

Door	Specify
1-3/8" (35mm)	D138
1-3/4" (44mm)	(standard)

Finish

Description		Specify
USP	Primed for Painting	600
SBL	Silver Aluminum Painted	689
LBL	Dark Bronze Painted	690
DBL	Light Bronze Painted	691
FBL	Black Painted	693
GBL	Satin Brass Painted	696

Miscellaneous Options

Description	Specify
Sex nuts and bolts (SNBs)	M54
Delayed action	M71
Full cover	(standard)
Corrosion protection	M75
Slim cover	M76
Heavy-duty parallel arm flush transom bracket (499F30) used with A2, A3, A4, A5 arms	M79
Parallel arm flush transom bracket (parallel or A1)	M82
Parallel arm offset bracket	M83
Mortise arm bracket (for regular arm mounting)	M84
Angle support bracket	M85
Extreme temperature fluid	(standard)

Drop Plates - order by number (formerly M80)

	Drop Plate	
Closer Series	With Slim Cover	With Full Cover
DC3210 (parallel)	188F65	597F58
DC3220 (top jamb)	188F65	188F65

Paint (cans)

Description	Specify
Silver Aluminum	597F94
Dark Bronze	597F95
Light Bronze	597F96
Satin Brass	597F97

Arm
The linkage of a closer that connects the body to the door or frame.

Backcheck
Slows a door during the opening cycle, by providing cushioned resistance to a forceful opening. Designed to protect people and objects behind the door and to prevent damage to the closer, hardware, and wall. Intensity can be increased or decreased. Not intended to act as a stop.

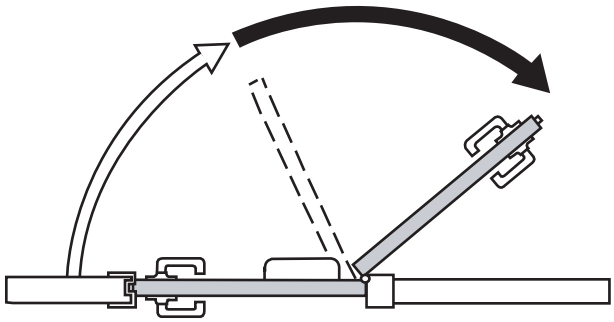

Closing Speed
The speed at which a door swings from the open position to within a few degrees of latching. See Latching Speed.

Corrosion Protection
Additional painted covering on all external parts to deter oxidation and corrosion.

Door Stop
A device to stop the swing of a door.

Hold Open
Maintains door at a particular degree of opening. A mechanical hold open may not be used on labeled fire doors, which must be self-closing.

Latching Speed
The speed of the door during the last few degrees of closing. Allows latching and prevents slamming.

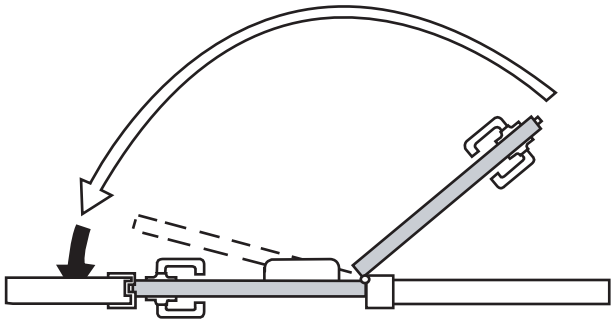

Mounting
The method by which a closer is attached to the door and frame.

Multi-Sized Closer
A closer whose spring tube design allows full adjustment of the spring power size from 1 through 6.

QUIK~INSTALL™ Mounting Bracket
Unique bracket that simplifies installation and minimizes installer fatigue.

Sex Nuts and Bolts (SNBs)
Thru-bolts required for all non-steel-reinforced fire doors, and recommended for non-reinforced wood and mineral core doors.

Spring Power
A measurement of closing force, or the ability to overcome draft, air pressure, weight or other resistance to door closing.

Star Punch
An eight-sided socket hole in the closer arm, permitting spindle pre-loading. Provides full functioning of backcheck and delayed action valves, and additional closing force, on parallel arm mountings.

Universal Mounting
The ability of a closer to accommodate either hand of door for regular, top jamb or parallel arm mounting.

Suggested Specifications

All door closers shall be DC3000 Series Door Closers as manufactured by Corbin Russwin Architectural Hardware.

Closers shall be of rack and pinion construction with a triple heat treated cold-formed steel spindle and a sintered steel piston, heat treated and precision machined. Cases shall be of cast iron with a one-piece seamless forged spring tube. A two-piece or seamed spring tube shall not be acceptable. Springs shall be double heat treated and tempered. Closers shall have a heavy-duty, forged steel main arm.

Optional arms shall include parallel, hold open, heavy-duty, heavy-duty hold open, heavy-duty reversible backstop and heavy-duty reversible backstop with hold open.

Closers shall be multi-sized with adjustable spring power to accommodate sizes 1 through 6 in one closer body, such as the Corbin Russwin DC3200 closer. Closing shall be controlled by two valves - one to control closing speed and one to control latching speed. Valves shall be concealed against unauthorized adjustment and shall be non-critical with "O" rings.

Closers shall be available with an adjustable backcheck intensity valve. Delayed action shall be available and shall be accomplished with a separate valve. Valves shall be accessible without removing the closer from the door.

Closers shall be surface applied with rectangular cover, and shall be devoid of manufacturer's trademarks.

Closers shall not project over 2-3/4", and shall be capable of mounting on a 1-3/4" top rail (or top jamb for inverted mounting). Full cover shall be standard. Non-hold open closers shall be regularly furnished with a power adjustment arm bracket capable of providing a 15% power adjustment. A QUIK~INSTALL™ mounting bracket to attach the closer shall be regularly furnished. High lubricity hydraulic fluid shall be furnished. Closers mounted top jamb and parallel arm shall allow for full 180° door opening.

Closers shall be listed by Underwriters' Laboratories for closers with non-hold open arms.

Certification:
ANSI 156.4, Grade 1

ICC/ANSI A117.1
Closers shall carry a five-year limited warranty.

For more information regarding Corbin Russwin Locksets, Exit Devices, Door Controls and Key Systems, contact your authorized Corbin Russwin Distributor or Sales Representative.

In U.S.:
Corbin Russwin Architectural Hardware
1902 Airport Road
Monroe, NC 28110
Phone 800-543-3658
Fax 800-447-6714
www.corbinrusswin.com

In Canada:
Yale-Corbin Canada Ltd.
6940 Edwards Boulevard
Mississauga, ONT L5T 2W2
Phone 800-461-3007
Fax 800-461-8989
www.yalecorbin.on.ca

Corbin Russwin and Design® is a registered trademark of Corbin Russwin, Inc. QUIK-INSTALL™ is a trademark of Corbin Russwin, Inc. Other products brand names may be trademarks or registered trademarks of their respective owners and are mentioned for reference purposes only. These materials are protected under US copyright laws. All contents current at time of publication. Corbin Russwin, Inc. reserves the right to change availability of any item in this catalog, its design, construction, and/or its materials. Copyright© 2001 Corbin Russwin, Inc. All rights reserved.

The ASSA ABLOY Group is the world's leading manufacturer and supplier of locks and associated products, dedicated to satisfying end-user needs for security, safety and convenience.

An ASSA ABLOY Group company

ASSA ABLOY

45045-MA-5.0-4/05R