Corbin Russwin®

Electrically Controlled Mortise Locksets

ML20900 ECL Series

An ASSA ABLOY Group company

ASSA ABLOY

ML20900 ECL Series

Simplicity

Combine simplicity and access control with Corbin Russwin's ML20900 ECL series electrically controlled mortise lock. Utilizing the proven ML2000 Series mortise lockset with the patented quick reversible latchbolt, the ML20900 series provides solenoid-operated remote locking and unlocking. The self-contained integral continuous-duty solenoid allows installation in standard mortise prep with slight modification by door manufacturer. The ML20900 ECL is ideal for use where increased security is necessary at all times, such as tenant space, pharmacies, computer rooms, and high security areas.

Security

In applications where increased security is required, look no further than the ML2000VR Vandal Resistant Trim. This cast stainless steel trim features tapered edges, double through bolts, torx-pin tamper resistant screws and the lever remains attached to the escutcheon when the spindle is broken. Also available is Corbin Russwin's patented Pyramid cylinder, the most secure locking system available. Pyramid is especially recommended for installations that require superior protection against picking, drilling and other surreptitious entry. See the Pyramid catalog for additional information.

Aesthetics

Access control doesn't mean a loss of visual appeal. Corbin Russwin's Vineyard Collection features four beautifully designed levers, perfect for high-profile applications where pleasing aesthetics is a must.

Key Advantages

- Available in 12 or 24 volt AC/DC
- Fail Safe or Fail Secure
- Minimal power requirements – lock is designed to lock or unlock as the situation demands
- Mechanical key override
- Patented Quick Reversible latchbolt, Patent # 6,349,982
- Full line of trims available, including the Vineyard Collection and Vandal Resistant
- Increased security available by adding Pyramid cylinders

Typical Application

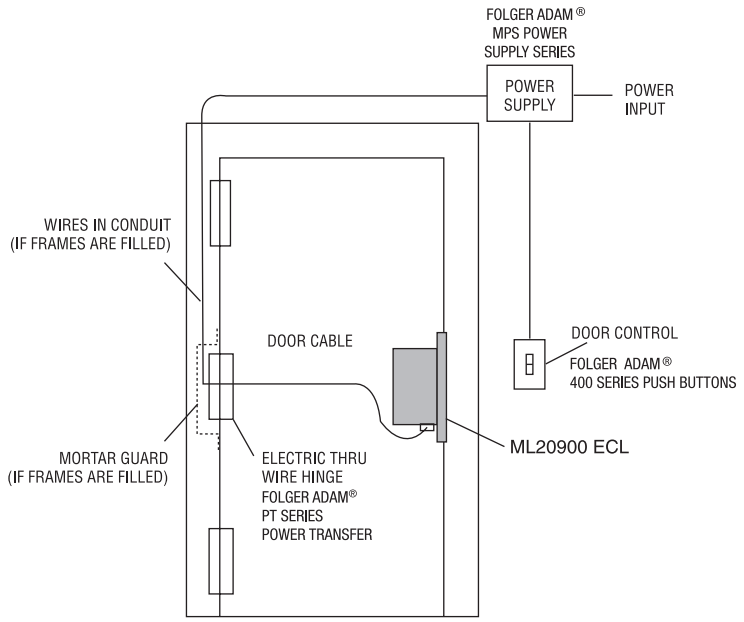

Applications	2
Typical System Components	3
Functions	4
Features	5
Electrical Options & Accessories	6
Trim Designs	8
Cylinders	17
Options and Accessories	18
Quick Codes	19
How to Order	21
Helpful Terms	22
How to Specify	23

This catalog can be found on the Internet at the Corbin Russwin website at: www.corbin-russwin.com

ML20900 ECL Series

Typical System Components (For Reference Only)

Tower Stairwell

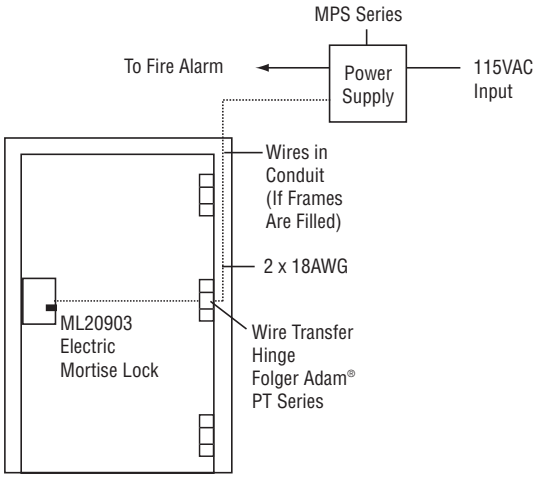

Operation:
Free egress at all times. Door is locked at all times preventing entry from the stairwell to a floor. Fire alarm activation will allow re-entry from the stairwell to the floor. Power failure will allow re-entry from the stairwell to the floor.

Access Control on Employee Entrance

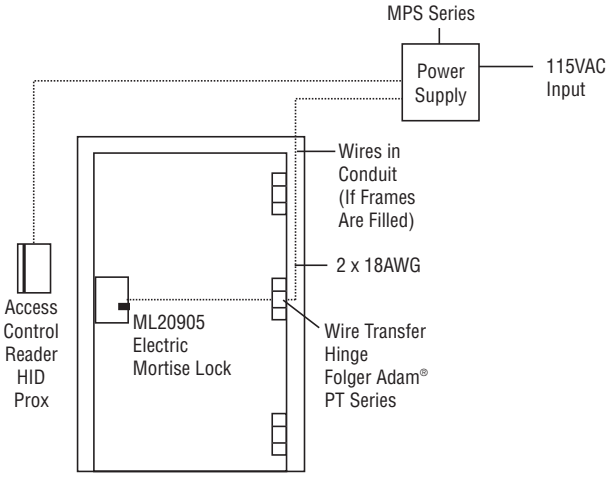

Operation:
Free egress at all times. Door is locked at all times preventing unauthorized entry. Authorized entry is permitted by presenting a valid user card.

Controlled Entry With Alarm

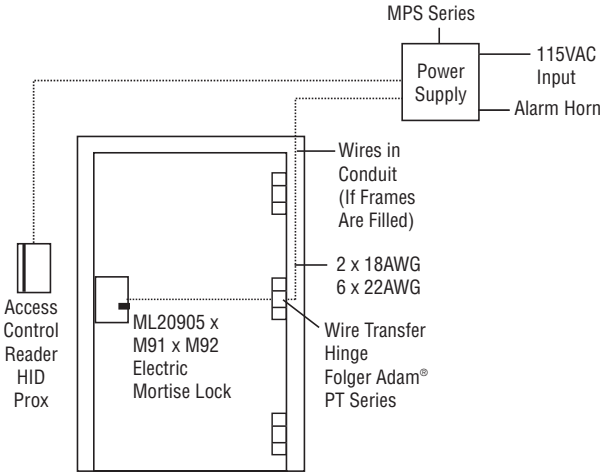

Operation:
Free egress at all times. User exits throught the door which triggers the M92 switch which shunts the alarm. Door is locked at all times preventing unauthorized entry. Authorized entry is permitted by presenting a valid user card. Forced entry will trigger M91 switch and activate alarm. Alarm is deactivated by a valid user card.

Lock Schematics

Power Leads

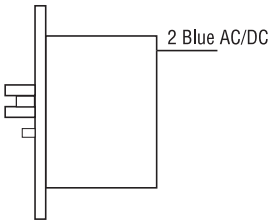

Power Leads x M92 (Request to Exit)

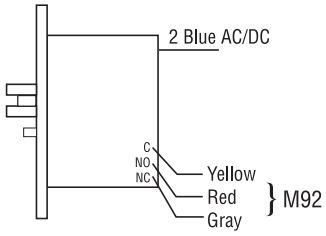

Power Leads x M91 (Latchbolt Monitor)

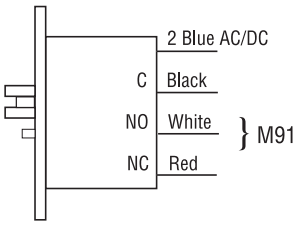

Power Leads x M105 (Security Monitor)

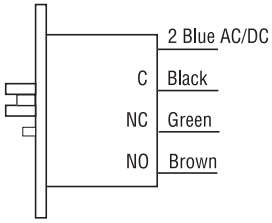

Consult factory for electrical system layouts, riser and wiring diagrams.

Fail Safe

The following functions are unlocked when power is off and locked when the power is on.

Outside	Inside	Series/Function	Description
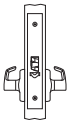		ML20910 (HS) (VR)	- Latchbolt by grip either side, unless outside grip is locked by energizing solenoid. - Inside grip always free. - Auxiliary latch deadlocks latchbolt.
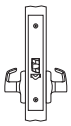		ML20920 (HS) (VR)	- Latchbolt by grip either side, unless both grips are locked by energizing solenoid. - Auxiliary latch deadlocks latchbolt.
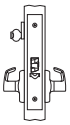		ML20901 (HS) (VR)	- Latchbolt by grip either side, unless both grips are locked by energizing solenoid. - Latchbolt by key outside when solenoid is energized. - Auxiliary latch deadlocks latchbolt.
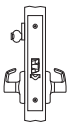		ML20903 (HS) (VR)	- Latchbolt by grip either side, unless outside grip is locked by energizing solenoid. - Latchbolt by key outside when solenoid is energized. - Inside grip always free. - Auxiliary latch deadlocks latchbolt.

Fail Secure

The following functions are locked when power is off and unlocked when the power is on.

Outside	Inside	Series/Function	Description
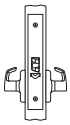		ML20930 (HS) (VR)	- Latchbolt by grip either side only when solenoid is energized. - Outside grip locked when solenoid is not energized. - Inside grip always free. - Auxiliary latch deadlocks latchbolt.
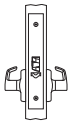		ML20940 (HS) (VR)	- Latchbolt by grip either side only when solenoid is energized. - Both grips locked when solenoid is not energized. - Auxiliary latch deadlocks latchbolt.
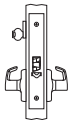		ML20904 (HS) (VR)	- Latchbolt by grip either side only when solenoid is energized. - Both grips locked when solenoid is not energized. - Latchbolt by key outside when solenoid is not energized. - Auxiliary latch deadlocks latchbolt.
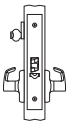		ML20905 (HS) (VR)	- Latchbolt by grip either side only when solenoid is energized. - Outside grip locked when solenoid is not energized. - Latchbolt by key outside when solenoid is not energized. - Inside grip always free. - Auxiliary latch deadlocks latchbolt.

(HS) Indicates function availability in ML2000HS.
(VR) Indicates function available in Vandal Resistant trim.

Features

Handing
Handed; quick reversible. The lockset can be re-handed without disassembling the lockcase.

Door Thickness
1-3/4" (44mm) standard. Optional door thicknesses available; see Quick Codes, page 19.

Backset
2-3/4" (70mm).

Lockcase
Heavy-gauge chrome plated steel, 5-7/8" (149mm) x 4" (102mm) x 15/16" (24mm).

Front
Heavy gauge steel, 8" (203mm) x 1-1/4" (32mm) x 3/32" (2mm).
Accommodates flat doors and doors beveled 1/8" (3mm) in 2" (51mm).

Armored Front
Wrought brass or bronze, attached by machine screws to lockcase front.

Latchbolt
2-piece mechanical anti-friction insert, 5/8" (16mm) x l" (25mm) x 3/4" (19mm) throw.

Auxiliary Latchbolt
9/16" (14mm) effective throw and 3/8" (10mm) effective auxiliary latch deadlocking.

Hub
Knob: nickel steel, 3/8" (10mm) x 5/16" (8mm).
Lever: steel, 8mm.
Vandal resistant lever: stainless steel, 8mm.

Spacing
C. to c. knob/lever to cylinder: 3-5/8" (92mm)
C. to c. knob/lever to thumbturn: 2-7/16" (62mm).

Strike
Wrought brass or bronze, ANSI straight lip standard, 4-7/8" (124mm) x 1-1/4" (32mm) x 1-1/8" (29mm) lip to center. Optional strikes, lip lengths and ANSI wrought strike box available; see Quick Codes, page 20.

Trim
Available with all ML2000 Series trim designs including Vineyard Collection. See pages 8-16.

Cylinder
Brass, 6-pin, L4 keyway, 0-bitted standard. Optional cylinders available; see Quick Codes, page 19.

Keys
Two nickel silver standard.

Warranty
Five-year limited warranty on ML2000 mortise lockset. One-year limited warranty on electronic components.

See the Corbin Russwin Vineyard Collection catalog for warranty information on the Infini-T® finish.

Electrical Specifications (Fail Safe/Fail Secure)
12VAC/VDC @ 800mA
24VAC/VDC @ 390mA
Continuous duty solenoid.
Monitor Switch Rating: 4 amp @ 250 VAC
Note: Operating voltage not to exceed +/- 10%.
See Quick Codes, page 20.

Monitor Options
M91 - Latchbolt Monitor
Latchbolt monitoring is a SPDT switch which monitors the full extension of the main latch.
M92 - Request to Exit Monitor
Request to Exit monitoring is a SPDT switch which monitors the activation of the inside trim.
M105 - Security Monitor
Security Monitor is two switches in series that monitors lock status (locked or unlocked) and Auxiliary Latch position.

Note: Monitoring options may only be ordered together as follows: M91xM92, M92xM105.

Certification/Compliance

ANSI
Meets A156.13 Series 1000, operational Grade 1.
Meets A117.1 Accessibility Code.

Federal
Meets FF-H-106C.

UL /ULC
All locks listed for A label and lesser class doors, 4' x 10' single or 8' x 10'' pair. Letter F and UL symbol on armored front indicate listing. Meets requirements of UL1034.

California State Reference Code
(Formerly Title 19, California State Fire Marshal Standard)
All levers with returns comply; levers return to within l/2" of door face.

Finishes

BHMA 605	Bright Brass
BHMA 605E*	Bright Brass
BHMA 606	Satin Brass
BHMA 606E*	Satin Brass
BHMA 611	Bright Bronze
BHMA 612	Satin Bronze
BHMA 613	Dark Oxidized Satin Bronze, oil rubbed
BHMA 613E*	Dark Oxidized Satin Bronze, oil rubbed
BHMA 625	Bright Chromium Plated
BHMA 626	Satin Chromium Plated
BHMA 629	Bright Stainless Steel
BHMA 630	Satin Stainless Steel

*Infini-T® finish available on Vineyard Collection trim only.

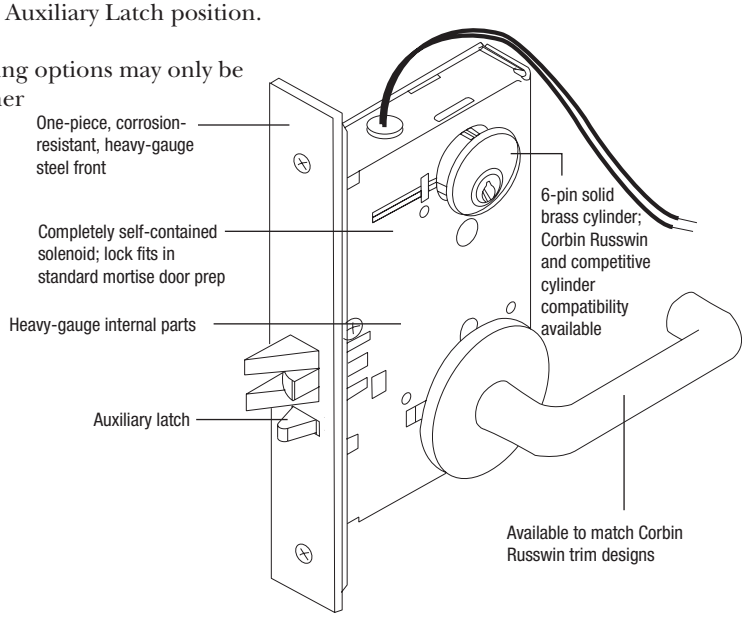

MPS Power Supply

Operation

Power supplies are designed to provide reliable filtered and regulated power for long life to a variety of electrified hardware components. All modular power supplies are field-selectable for 12 & 24 VDC and are designed to meet UL 1481 Standards. Consult the Folger Adam® catalog for additional information on options and accessories.

Features

- Fire panel emergency release input
- PC Board mounted system LED indicator
- Field-selectable 12 or 24 VDC output
- Regulated and filtered with input and output protection
- Battery charging is provided from a separate output terminal

MPS10

Electrical Specifications

Model	Input	Output
MPS10	115 VAC @ 600mA 50\60 Hz	1 Amp @ 12/24 VDC (Controls 1-12V lock or 2-24V locks)
MPS15	115 VAC @ 800mA 50\60 Hz	1.5 Amp @ 12/24 VDC (Controls 1-12V lock or 3-24V locks)

To order, specify:
MPS10
MPS15

Accessories by Folger Adam®

PT-2

PT-4

101-1A

101AK

- RB12V4 – Battery back-up for MPS power supplies (4 amp hour 12V) 2 required for 24 volt
- PT-2 – Armored flex transfer (less wires) 18"
- PTH-4 – Transfer hinge 4 wire 4-1/2 x 4-1/2
- PTH-10 – Transfer hinge 10 wire 4-1/2 x 4-1/2
- 101-1A – Remote or local single door annunciator with alarm and tricolor LED
- 101AK – Remote or local single door annunciator with 2 function key switch for reset and bypass, and audible alarm mute button with tri-color LED (2 gang). Accepts standard 1-1/8" (29mm) to 1-1/4" (32mm) mortise cylinder.

Folger Adam product must be ordered through Folger Adam. Consult Folger Adam catalog for additional information.

Folger Adam® Push Button and Key Switch Controls

- Available in standard 20 gauge SS finishes and architectural grade finishes.
- Key switches accept standard 1-1/8" (29mm) & 1-1/4" (32mm) mortise & IC cylinders.
- Special monitoring type annunciators are available for monitoring electrified hardware.
- Monitor consoles are available for multiple opening applications.
- Wiring diagrams are available for complete turnkey packages involving electrified hardware and components.

Folger Adam Heavy-Duty Push Button Switches - 5, 6 and 10 amp

406

422GE

430

Model	Description	Rating
401	MA SPDT - Maintained	5 Amp
402	MO SPDT - Momentary	5 Amp
431	MA specify NO or NC	6 Amp
432	MO specify NO or NC	6 Amp

Folger Adam® Standard and Heavy-Duty Key Switches (700 & 800 Series) - 6 amp

700 Series Standard

700 Series Narrow

800 Series Standard

800 Series Narrow

Model 6 Amp	Switch Description
701-6	AA SPDT - Alternate Action (Maintained)
702-6	MO SPDT - Momentary
710D-6	1-60 sec adj. timer & MO SPDT/AA SPDT

Options	Description
L1	One LED (specify color)
L2	Two LEDs (1 red/1 green)
LT	Tri-colored LED (amber/red/green)
SN	Sonic alarm (2 gang only: 3-28 volts)

Note: Additional information is available on all of the products listed above through the Folger Adam® catalog or at www.folgeradamdoorcontrols.com

Lustra

Complies with codes requiring lever to return to within 1/2" (13mm) of door face. Brass, bronze or stainless steel.

LWA
Lever: Wrought
Rose: Wrought

LSA
Lever: Cast
Rose: Wrought

LWF
Lever: Wrought
Rose: Cast

LWB
Lever: Wrought
Rose: Cast

LSB
Lever: Cast
Rose: Cast

LSF
Lever: Cast
Rose: Cast

LWM
Lever: Wrought
Escutcheon: Wrought

LSM
Lever: Cast
Escutcheon: Wrought

LWN
Lever: Wrought
Escutcheon: Wrought

LSN
Lever: Cast
Escutcheon: Wrought

LWP
Lever: Wrought
Escutcheon: Wrought

LSP
Lever: Cast
Escutcheon: Wrought

LSR
Lever: Cast
Escutcheon: Wrought stainless steel; forged brass

LWR
Lever: Wrought
Escutcheon: Cast

Regis

Brass, bronze or stainless steel.

RWA
Lever: Wrought
Rose: Wrought

RSA
Lever: Cast
Rose: Wrought

RWF
Lever: Wrought
Rose: Cast

RWB
Lever: Wrought
Rose: Cast

RSB
Lever: Cast
Rose: Cast

RSF
Lever: Cast
Rose: Cast

RWM
Lever: Wrought
Escutcheon: Wrought

RSM
Lever: Cast
Escutcheon: Wrought

RWN
Lever: Wrought
Escutcheon: Wrought

RSN
Lever: Cast
Escutcheon: Wrought

RWP
Lever: Wrought
Escutcheon: Wrought

RSP
Lever: Cast
Escutcheon: Wrought

RSR
Lever: Cast
Escutcheon: Wrought stainless steel; forged brass

RWR
Lever: Wrought
Escutcheon: Cast

Citation

Brass, bronze or stainless steel.

CSA
Lever: Cast
Rose: Wrought

CSB
Lever: Cast
Rose: Cast

CSF
Lever: Cast
Rose: Cast

CSM
Lever: Cast
Escutcheon: Wrought

CSN
Lever: Cast
Escutcheon: Wrought

CSP
Lever: Cast
Escutcheon: Wrought

CSR
Lever: Cast
Escutcheon: Wrought stainless steel; forged brass

Newport

Complies with codes requiring lever to return to within 1/2" (13mm) of door face. Brass, bronze or stainless steel.

NSA
Lever: Cast
Rose: Wrought

NSB
Lever: Cast
Rose: Cast

NSF
Lever: Cast
Rose: Cast

NSM
Lever: Cast
Escutcheon: Wrought

NSN
Lever: Cast
Escutcheon: Wrought

NSP
Lever: Cast
Escutcheon: Wrought

NSR
Lever: Cast
Escutcheon: Wrought stainless steel; forged brass

Armstrong

Brass, bronze or stainless steel.

ASA
Lever: Cast
Rose: Wrought

ASB
Lever: Cast
Rose: Cast

ASF
Lever: Cast
Rose: Cast

ASM
Lever: Cast
Escutcheon: Wrought

ASN
Lever: Cast
Escutcheon: Wrought

ASP
Lever: Cast
Escutcheon: Wrought

ASR
Lever: Cast
Escutcheon: Wrought stainless steel; forged brass

Dirke

Brass, bronze or stainless steel.
Not reversible. Specify hand.

DSA
Lever: Cast
Rose: Wrought

DSB
Lever: Cast
Rose: Cast

DSF
Lever: Cast
Rose: Cast

DSM
Lever: Cast
Escutcheon: Wrought

DSN
Lever: Cast
Escutcheon: Wrought

DSP
Lever: Cast
Escutcheon: Wrought

DSR
Lever: Cast
Escutcheon: Wrought stainless steel; forged brass

Essex

Complies with codes requiring lever to return to within 1/2" (13mm) of door face. Brass, bronze or stainless steel.

ESA
Lever: Cast
Rose: Wrought

ESB
Lever: Cast
Rose: Cast

ESF
Lever: Cast
Rose: Cast

ESM
Lever: Cast
Escutcheon: Wrought

ESN
Lever: Cast
Escutcheon: Wrought

ESP
Lever: Cast
Escutcheon: Wrought

ESR
Lever: Cast
Escutcheon: Wrought stainless steel; forged brass

Princeton

Complies with codes requiring lever to return to within 1/2" (13mm) of door face. Brass, bronze or stainless steel.

PSA
Lever: Cast
Rose: Wrought

PSB
Lever: Cast
Rose: Cast

PSF
Lever: Cast
Rose: Cast

PSM
Lever: Cast
Escutcheon: Wrought

PSN
Lever: Cast
Escutcheon: Wrought

PSP
Lever: Cast
Escutcheon: Wrought

PSR
Lever: Cast
Escutcheon: Wrought stainless steel; forged brass

Global

Brass, bronze or stainless steel.

GRC
Knob: Wrought reinforced
Rose: Wrought reinforced

GWC
Knob: Wrought
Rose: Wrought reinforced

GRD
Knob: Wrought reinforced
Rose: Wrought reinforced

GWD
Knob: Wrought
Rose: Wrought reinforced

GSA
Knob: Cast
Rose: Wrought

GSF
Knob: Cast
Rose: Cast

GRE
Knob: Wrought reinforced
Rose: Wrought reinforced

GWE
Knob: Wrought
Rose: Wrought reinforced

GRM
Knob: Wrought reinforced
Escutcheon: Wrought

GWM
Knob: Wrought
Escutcheon: Wrought

GSM
Knob: Cast
Escutcheon: Wrought

GRP
Knob: Wrought reinforced
Escutcheon: Wrought

GWP
Knob: Wrought
Escutcheon: Wrought

GSP
Knob: Cast
Escutcheon: Wrought

GSR
Knob: Cast
Escutcheon: Wrought stainless steel; forged brass

GRR
Knob: Wrought reinforced
Escutcheon: Wrought stainless steel; forged brass

GWR
Knob: Wrought
Escutcheon: Wrought stainless steel; forged brass

GSN
Knob: Cast
Escutcheon: Wrought

GWN
Knob: Wrought
Escutcheon: Wrought

GRN
Knob: Wrought reinforced
Escutcheon: Wrought

Belmont

Brass, bronze or stainless steel.

BRC
Knob: Wrought reinforced
Rose: Wrought reinforced

BWC
Knob: Wrought
Rose: Wrought reinforced

BRD
Knob: Wrought reinforced
Rose: Wrought reinforced

BWD
Knob: Wrought
Rose: Wrought reinforced

BRE
Knob: Wrought reinforced
Rose: Wrought reinforced

BWE
Knob: Wrought
Rose: Wrought reinforced

BRM
Knob: Wrought reinforced
Escutcheon: Wrought

BWM
Knob: Wrought
Escutcheon: Wrought

BRN
Knob: Wrought reinforced
Escutcheon: Wrought

BWN
Knob: Wrought
Escutcheon: Wrought

BRP
Knob: Wrought reinforced
Escutcheon: Wrought

BWP
Knob: Wrought
Escutcheon: Wrought

BRR
Knob: Wrought reinforced
Escutcheon: Wrought

BWR
Knob: Wrought
Escutcheon: Wrought

Yankee

Brass, bronze or stainless steel.

YWA

Knob: Wrought
Rose: Wrought

YWF

Knob: Wrought
Rose: Cast

YWM

Knob: Wrought
Escutcheon: Wrought

YWN

Knob: Wrought
Rose: Wrought

YWP

Knob: Wrought
Escutcheon: Wrought

YWR

Knob: Wrought
Escutcheon: Wrought stainless steel or forged brass

VINEYARD COLLECTION

Infini-T®

Infini-T® finish is a technologically advanced finish produced by a coating technology called Physical Vapor Deposition (PVD). Infini-T® provides the ultimate surface protection against the elements and everyday wear and tear.

Merlot

MSG
Lever: Cast
Rose: Cast

MSL
Lever: Cast
Escutcheon: Cast

Frascati

FSG
Lever: Cast
Rose: Cast
Specify hand.

FSL
Lever: Cast
Escutcheon: Cast
Specify hand.

Zinfandel

ZSG
Lever: Cast
Rose: Cast
Specify hand.

ZSL
Lever: Cast
Escutcheon: Cast
Specify hand.

Tuscany

Complies with codes requiring lever to return to within 1/2" (13mm) of door face.

TSG
Lever: Cast
Rose: Cast

TSL
Lever: Cast
Escutcheon: Cast

Surety

SST trim is designed for high-traffic commercial, industrial, institutional and government buildings that require a greater degree of security than traditional mortise trim.

Advantages

- Flush-mounted security fixed core cylinder with pick-resistant interlocking pins
- Cast escutcheons and knobs, double through-bolted
- Security screws
- 1" (25mm) throw stainless steel deadbolt
- Stainless steel hubs

SST

Knob: Cast
Escutcheon: Cast
Brass, bronze.

ML2000VR

Vandal Resistant trim is designed for high-traffic commercial, industrial, institutional and government buildings that require a greater degree of security than traditional mortise trim.

Advantages

- Flush-mounted conventional fixed core cylinder
- Cast escutcheons and levers, double through-bolted
- Torx®-pin tamper resistant security screws
- Levers remain attached if spindle is broken

Newport

NSV

Lever: Cast stainless steel
Escutcheon: Cast stainless steel

Citation

CSV

Lever: Cast stainless steel
Escutcheon: Cast stainless steel

Cylinders

Conventional (Standard)
.552" plug diameter
Brass, 6-pin
2 nickel silver keys
Finishes: See Key Systems section.

Mortise Cylinder Type	Number
Ⓥ Ⓗ Pyramid PHS	1020-114-A01
Ⓥ Ⓗ Pyramid PCHS	1030-114-A01
Ⓥ Ⓗ Conventional 6-pin (std.)	1000-118-A01
Ⓥ Ⓗ 7-pin	1000-114-A01-7
Ⓥ Ⓗ 6-pin IC	1080-114-A01
Ⓥ Ⓗ 7-pin IC	1080-112-A01-7
Ⓥ Ⓗ Security IC	1090-114-A01
Ⓥ Ⓗ Security	1010-118-A01
Flex head	1100-100-A01
Flex head 7-pin	1100-118-A01-7
Ⓥ Ⓗ Blockout	1012-114-A01
Plug only to show (concealed shell)	1200-118-A01
Plug only to show 7-pin (concealed shell)	1200-114-A01-7

For complete Pyramid information and options refer to Pyramid catalog.
Ⓗ Indicates cylinder is available with ML2000HS lockset.
Ⓥ Indicates function is available with Vandal Resistant trim.

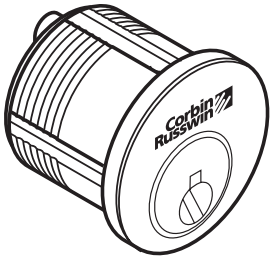

To order optional cylinder with lockset, see How to Order, page 19. To order cylinder separately, specify Part No. x Keyway x Finish (e.g., 1000-118-A01 x L4 x 626).

Pyramid

Corbin Russwin's patented security cylinder, is the most secure locking system available. Pyramid provides the highest level of security and is underwritten by UL437 standards. It is especially recommended for installations requiring superior protection against picking and drilling.

See the Pyramid catalog for complete information.

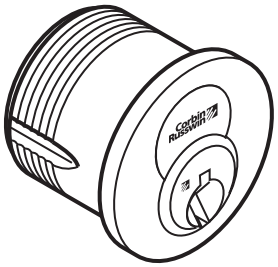

Pyramid
Interchangeable Core
(I.C.)

Pyramid
.496" plug diameter
7-pin 1-1/4" cylinders
2 nickel silver keys with large key bow
Finishes: See Pyramid catalog section.

Plug only to show (concealed shell)

Only the cylinder plug face is visible when lock trim is in place. Available on "M", "R" and "L" escutcheons. See individual trim designs for availability. To order, see Quick Codes, page 19.

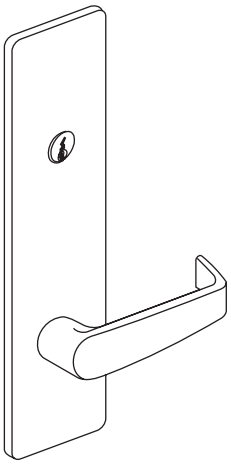

Strikes

ANSI Straight Lip (Standard)
Brass or bronze
Non-handed
4-7/8" x 1-1/4" x 1-1/8" lip to center
Optional lip lengths: 7/8", 1-1/4", 1-3/8", 1-1/2", 1-3/4", 2", 2-1/4", 2-1/2", 2-3/4", 3"

ANSI Curved Lip
Brass or bronze
Handed
4-7/8" x 1-1/4" x 1-1/4" lip to center
Optional lip lengths: 1-3/8", 1-1/2", 1-3/4", 2", 2-1/4", 2-1/2", 2-3/4", 3"

ANSI Wrought Strike Box
To order with lockset, see Quick Codes, page 20.

To order separately, specify 120F76.

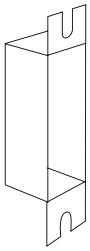

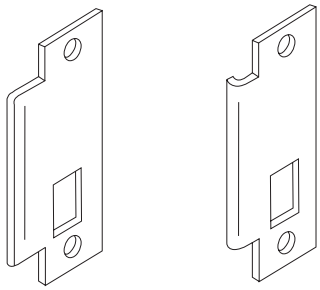

Latchbolt Only

Part No.	Description
236L73	Straight Lip
340L62	Curved Lip for RH
340L63	Curved Lip for LH

To order strike with lockset, see Quick Codes, page 20.
To order strike separately, specify Part No. x Lip Length x Finish (e.g., 340L63 x 1-1/2" x 626).

Open Back
Size: 5-1/4" x 1-1/4"

To order with lockset, see Quick Codes, page 20.

To order separately, specify Part No. x Door Thickness x Finish (e.g., 411L62 x 2" x 626).

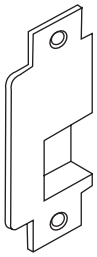

Hand	Door Thickness	Part No.
RHR	1-3/4" (44mm)	411L63 016
	2" (51mm)	411L63 018
	2-1/4" (57mm)	411L63 020
LHR	1-3/4" (44mm)	411L62 016
	2" (51mm)	411L62 018
	2-1/4" (57mm)	411L62 020

Rabbeted Front and Strike
Brass or bronze
For 1/2" rabbet
No optional lip lengths

To order with lockset, see Quick Codes, page 20.

To order separately, specify Part No. x Finish (e.g., 318F67 x 626).

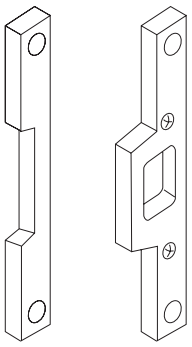

	Part No.	Hand
Latchbolt Only	318F64	RH/LHR
	318F67	LH/RHR

Corbin Russwin®

Cylinder and Keying

Description	Specify
Conventional 6-pin (VR) (HS)	(standard)
Conventional 7-pin (VR) (HS)	7P
Less cylinder(s) (VR) (HS)	LC
Security (ML2000HS standard) (VR) (HS)	HS
Security IC (VR) (HS)	CHS
IC 6-pin (VR) (HS)	C6
IC 6-pin with temporary construction core (VR) (HS)	CT6
IC 6-pin less core (VR) (HS)	CL6
IC 7-pin (VR) (HS)	C7
IC 7-pin with temporary construction core (VR) (HS)	CT7
IC 7-pin less core (VR) (HS)	CL7
Pyramid Fixed Core (VR) (HS)	PHS
Pyramid IC (VR) (HS)	PCHS
Pyramid with temporary construction core (VR) (HS)	CTP
Pyramid less core (VR) (HS)	CLP
Blockout function cylinder (VR) (HS)	BO
Flex head cylinder, 6-pin (sectional trim)	FX6
Flex head cylinder, 7-pin (sectional trim)	FX7
Plug only to show, 6-pin (concealed shell; M and escutcheons only, single cylinder only)	P06
Plug only to show, 7-pin (concealed shell; M and R escutcheons only, single cylinder only)	P07
0-bitted with 2 blank keys	(standard)
Keyed random (VR) (HS)	KR
Construction master keyed (not available (VR) (HS) for Pyramid)	CMK
Visual key control (VR) (HS)	VKC
- No keying data stamped on key or cylinder	VKC0
- Keys only	VKC1
- Cylinders and keys (not for HS, CHS, PHS or PCHS)	VKC2
- Cylinders only (not for HS, CHS, PHS or PCHS)	VKC3
Concealed key control (CKC) (VR) (HS)	
- CKC cylinders with VKC keys	CKC2
- CKC cylinders only (not for PHS or PCHS)	CKC3
2 keys per lock	(standard)
More than 2 keys	KY# (e.g. KY6)

(VR) Indicates availability with ML2000VR lockset

(HS) Indicates cylinder is available with ML2000HS lockset

Finish

Description	Specify
US3 Bright Brass (HS)	BHMA 605
US3 Bright Brass (HS)	BHMA 605E*
US4 Satin Brass (HS)	BHMA 606
US4 Satin Brass (HS)	BHMA 606E*
US9 Bright Bronze (HS)	BHMA 611
US10 Satin Bronze (HS)	BHMA 612
US10B Dark Oxidized Satin Bronze, oil rubbed (HS)	BHMA 613
US10B Dark Oxidized Satin Bronze, oil rubbed (HS)	BHMA 613E*
US26 Bright Chromium Plated (HS)	BHMA 625
US26D Satin Chromium Plated (HS)	BHMA 626
US32 Bright Stainless Steel	BHMA 629
US32D Satin Stainless Steel (VR) (HS)	BHMA 630

*Infini-T® finish available on Vineyard Collection trim only.

Door Thickness

Door* Thickness	Sectional Trim - Specify	Escutcheon Trim* - Specify
1-3/8" (35mm)	D138	D138
1-3/4" (44mm)	(standard)	(standard)
1-7/8" (48mm)	D178	N/A
2" (51mm)	D200	N/A
2-1/8" (54mm)	D218	D214
2-1/4" (57mm)	D214	D214
2-3/8" (60mm)	D238	D238
2-1/2" (64mm)	D212	D212
2-5/8" (67mm)	D258	D258
2-3/4" (70mm)	D234	D234
2-7/8" (73mm)	D278	D278
3" (76mm)	D300	D300
3-1/8" (79mm)	D318	D318
3-1/4" (83mm)	D314	D314
3-3/8" (86mm)	D338	D338
3-1/2" (89mm)	D312	D312
3-5/8" (92mm)	D358	D358
3-3/4" (95mm)	D334	D334
3-7/8" (98mm)	D378	D378
4" (102mm)	D400	D400

*For 2-3/8" (60mm) to 4" (102mm) door thickness: through-bolts and thumbturn lever spindle for 4" (102mm) door will be provided; may be field cut. "R"and "L" escutcheon only available 1-3/8" (35mm), 1-3/4" (44mm), and 2-1/4" (57mm).

(VR) Vandal Resistant trim accommodates doors 1-3/4" (44mm) to 2-1/4"(57mm). Door thicknesses other than 1-3/4" (19mm) must be specified.

Corbin Russwin®

Miscellaneous Options

Description	Specify
Spanner head screws	M02
Torx® head screws (not available for "N" VR HS escutcheon trims)	M04
ANSI wrought strike box VR HS	M17
*Knurling outside and inside VR	M20
*Knurling outside only VR	M21
*Knurling inside only VR	M22
*Abrasive coat outside and inside VR	M23
*Abrasive coat inside only VR	M24
*Abrasive coat outside only VR	M25

*Not available with Vineyard Collection trim.

Electric Monitor Options

Description	Specify
Latchbolt Monitor	M91
Request to Exit	M92
Security Monitor	M105

These options may be ordered together only as follows: M91xM92, M92xM105.

Handing

Description	Specify
Right Hand	RH
Left Hand	LH
Right Hand Reverse	RHR
Left Hand Reverse	LHR

Electric Accessories

Description	Specify
Power supply 1.0 Amp @ 12/24 VDC output	MPS10
Power supply 1.5 Amp @ 12/24 VDC output	MPS15

Strike

Lip to Center	ANSI Straight Lip Specify	ANSI Curved Lip Specify
7/8" (1mm)	SS078	N/A
1-1/8" (28mm)	(standard)	N/A
1-1/4" (32mm)	SS114	SA114
1-3/8" (35mm)	SS138	SA138
1-1/2" (38mm)	SS112	SA112
1-3/4" (44mm)	SS134	SA134
2" (51mm)	SS200	SA200
2-1/4" (57mm)	SS214	SA214
2-1/2" (64mm)	SS212	SA212
2-3/4" (70mm)	SS234	SA234
3" (76mm)	SS300	SA300
Open Back Strike	**Door Thickness**	**Specify**
	1-3/4" (44mm)	SB134
	2" (51mm)	SB200
	2-1/4" (57mm)	SB214

Rabbeted front and strike – Specify SR118

Voltage

Description	Specify
12 volt alternating current/direct current	12AD
24 volt alternating current/direct current	24AD

Ordering Examples

Lock Only (Includes lock case, armored front, strike and screw pack)

Quantity	Series/Function	Trim*	Finish	Hand	Voltage	Misc. Options
6	**12AD**	**ML20901**	**LL**	**626**	**RHR**	**M105**

*TRIM KEY
KK Knob x Knob
LL Lever x Lever

Where to find ordering information and Quick Codes

Series/Function	Page 4
Trim Designs	Pages 8-16
Cylinders and Keying	Page 19
Finish	Page 19
Handing	Page 20
Voltage	Page 20
Miscellaneous Options	Page 20

Contract/Detailed Order

Quantity	Keyset	Series/Function	Trim	Finish	Hand	Voltage	Misc. Options	Optional Cylinder	Keying
24	**AA1**	**ML20904**	**LWA**	**626**	**RHR**	**12AD**	**M20**	**7P**	**VKC3**

Abrasive Coat
Hard granular material applied to a knob or lever to provide a non-slip tactile surface for the visually impaired.
Alternating Current- An electric current that reverses its direction regularly and continually. The voltage alternates its polarity and direction of current flow negative to positive.

ANSI Wrought Strike Box
A metal box mounted behind the ANSI strike to protect the strike opening from mortar or cement.

Armored Front
A protective, removable front which conceals the cylinder set screws and the lockcase mounting screws.

Auxiliary Latchbolt
A supplementary latch which, when the door is closed, automatically deadlocks the latchbolt. Protects the latchbolt from forced retraction or "credit carding."

Backset
The distance from the front of the lock to the centerline of the cylinder or knob/lever hub.

Bevel
The angle of the edge of a door in relation to the inside and outside surfaces of the stile. The most common bevel for commercial doors is 1/8" in 2".

Case (Lockcase)
The housing of a lockset containing most of the working parts.

Escutcheon
An elongated plate, either protective or ornamental, containing openings for the cylinder, knob/lever and thumbturn lever.

Front
The part of a lock visible on the edge of a door.

Hub
The part of a lock through which a spindle passes to actuate the latchbolt retractor.

Knurling
A permanently applied tactile warning engraved in the metal of a knob or lever to warn the visually impaired of dangerous conditions on the other side of the door.

Latchbolt
A lock component having a beveled end that projects from the lock front but may be forced back into the lockcase by end pressure or drawn back by action of the retractor. When the door is closed, the latchbolt projects into a hole provided in the strike, holding the door in the closed position.

Open Back Strike
For use with a pair of doors. The back of the strike is cut away, permitting the inactive door to be opened independently.

Rabbet
The portion of a door frame into which the door fits. Also, the abutting edges of a pair of doors, so shaped as to provide an overlap. One half of the edge projects beyond the other half, usually 1/2".

Return
The part of a lever handle which angles or turns back toward the face of the door. Also, the distance between the end of the return of the lever and the surface of the door.

Sectional Trim
Lock trim with two sections; a lever or knob with a rose which is not joined by an external plate to the cylinder above.

Throw
The distance that a lock's deadbolt or latchbolt projects when in the locked position. The effective throw is the distance that a latchbolt projects when deadlocked.

Keying and Cylinder Terms

Blockout Cylinder
A cylinder which allows all non-blockout keys to be temporarily blocked from operating. It is set by a blockout key.

Concealed Key Control (CKC)
The marking of standard key symbols on a cylinder in a location which is not visible once the cylinder is installed.

Construction Core
An interchangeable core for temporary use during construction. It is replaced by the permanent core when construction personnel no longer need access.

Construction Master Keying (CMK)
A cylinder preparation which allows temporary access by construction personnel.

Flex Head Cylinder
A cylinder with built-in adjustment for minor variations in door and trim thickness.

Security Cylinder
A cylinder which provides extra resistance to picking and unauthorized duplication of keys.

Interchangeable Core (IC)
A cylinder which can be removed and installed quickly with a control key by non-skilled personnel when rekeying is required.

Key Symbol
A letter/number combination in standard industry format (e.g., 1AA, AA1, etc.) which indicates exactly how a key or cylinder fits into a keying system.

Master Keying
Preparation of a cylinder to operate with keys of different levels of access.

Plug Only to Show (Concealed Shell)
A cylinder whose head is cut back to fit under "plug only to show" escutcheon trim for enhanced security and appearance; also called concealed shell.

Visual Key Control (VKC)
The marking of standard key symbols on keys and on the visible portion of the front of a cylinder.

Electrical Terms

Alternating Current
An electric current that reverses its direction regularly and continually. The voltage alternates its polarity and direction of current flow negative to positive.

Conductor
Material with the ability to carry electric current. The term is also used for electric wire.

Current
The flow of electrons through an electrical conductor. Current is measured in amperes.

Direct Current
Electrical current that travels in only one direction and has a negative and a positive polarity.

Fail Safe
An operation that allows a lock to be unlocked when power is interrupted.

Fail Secure
An operation that allows a lock to be locked when power is interrupted.

Latch Bolt Monitor
A single pole double throw (SPDT) switch which monitors the full extension of the main latch bolt.

Request to Exit Monitor
A single pole double throw (SPDT) switch which monitors the movement of the inside trim on a lock.

Security Monitor
Two SPDT switches wired together to monitor the lock status (locked or unlocked) and the auxiliary latch position.

Voltage
The term most often used to designate electrical pressure that exists between two points and is capable of producing a flow of current when a closed circuit is connected between the two points.

Suggested Specification

Locksets shall be ML20900 ECL Series Electrically Controlled Mortise Locksets as manufactured by Corbin Russwin Architectural Hardware.

Functions available shall be in one size case, manufactured from heavy gauge steel, minimum thickness 3/32", completely chrome plated for corrosion resistance and lubricity of parts. Cases shall be closed on all sides to protect internal parts. Locks shall have adjustable, beveled and armored fronts, standard 2-3/4" backset and a full 3/4" throw two-piece mechanical anti-friction latchbolt, and shall be available for a minimum door thickness of 1-3/4". Internal parts shall be heavy gauge steel, zinc dichromate plated for corrosion resistance.

The locking solenoid shall be self-contained in the mortise lockcase, allowing the lockset to be installed in a standard mortise door preparation with a slight modification by door manufacturer.

ML20900 ECL shall be available 12 or 24 volt, AC/DC, and fail safe or fail secure. Lockset shall include an internal rectifier.

Locksets with latchbolts, regardless of trim, shall be listed by Underwriters Laboratories for A label and lesser class doors, 4' x 10' single or 8' x 10' pair.

Mechanical cylinder override shall be available. Optional cylinders shall include flexible head, concealed cylinder shell, interchangeable core, security and blockout types.

Lock trim (knob, lever, sectional or escutcheon) shall be through-bolted through the lockcase to ensure correct alignment and proper operation.

Certification:
Federal Specification FF-H-106C
ANSI A156.13 Series 1000, Grade 1
ANSI A117.1 Accessibility Code (lever handle trim)
California State Reference Code, 1989 (formerly Title 19, California State Fire Marshal Standard) (lever handle trim)

Locks, trim and cylinders shall be from one manufacturer.

Locksets shall carry a one-year limited warranty.

For more information regarding Corbin Russwin Locksets, Exit Devices, Door Controls and Key Systems, contact your authorized Corbin Russwin Distributor or Sales Representative.

In U.S.:
Corbin Russwin Architectural Hardware
1902 Airport Road
Monroe, NC 28110
Phone 800-543-3658
Fax 800-447-6714
www.corbin-russwin.com

In Canada:
Yale-Corbin Canada Ltd.
6940 Edwards Boulevard
Mississauga, ONT L5T 2W2
Phone 800-461-3007
Fax 800-461-8989
www.yalecorbin.on.ca

The ASSA ABLOY Group is the world's leading manufacturer and supplier of locks and associated products, dedicated to satisfying end-user needs for security, safety and convenience.

Corbin Russwin and Design® is a registered trademark of Corbin Russwin, Inc. Folger Adam® is a registerd trademark of Folger Adam Security Inc. Infini-T® and Infini-T and Design® are registered trademarks of Corbin Russwin, Inc. Other products brand names may be trademarks or registered trademarks of their respective owners and are mentioned for reference purposes only. These materials are protected under US copyright laws. Copyright© 2002, Corbin Russwin, Inc. All rights reserved. All contents current at time of publication. Corbin Russwin, Inc. reserves the right to change availability of any item in this catalog, its design, construction, and/or its materials.

An ASSA ABLOY Group company

ASSA ABLOY

45086-MA-20.0-12/02N