Corbin Russwin®

Door Closers

DC6000 Series

An ASSA ABLOY Group company

ASSA ABLOY

Applications

Corbin Russwin's history combines high-quality product and innovative design. That tradition continues with the new Grade 1 DC6000 Series door closer, designed and engineered with quality features such as captured valves and a complete range of new arms. The DC6000 series is the perfect closer for high-use openings or openings that must meet ADA requirements, such as schools, office buildings, health care facilities, and retail complexes. The series also meets UL and UL10C positive pressure requirements for fire openings.

Quality

More than meets the eye…The design of the DC6000 Series incorporates internal advantages engineered to provide consistent quality operation. Double O-rings, a new spring tube design, new arms and captured valves ensure longevity.

Security

Engineered to meet high security standards, the DC6000 offers a full array of security features. A new heavy-duty arm offers increased strength for high-use, high-abuse situations. Captured valves and optional Torx® security screws also assist in security situations by making the closer tamper resistant.

Key Advantages

- Heavy-duty forged arm
- Spring-adjust captured valves
- Self-drilling screws
- QUIK-INSTALL™ bracket
- Cast iron body
- Retrofit plates
- Powder painted regular arms

Introductions	2
Features	3 -5
Mountings	6-7
Arms Options	8-10
Mounting Brackets	11
Brackets and Covers	12-13
Size and Handing	14-15
Helpful Terms	16
How to Order	17
Quick Codes	18-19
Specifications	20-21

This catalog can be found on the Internet at the Corbin Russwin website at: www.corbin-russwin.com

Versatility

Conditions vary from job to job, but a top-quality product that is dependable, easy to install and versatile is a must. The DC6000 Series door closer is the solution. A variety of features makes this the choice for retrofitting, quick installation, and longevity. Corbin Russwin offers a wide variety of arms, tracks and special brackets to meet special header/ frame conditions. The small footprint and unobtrusive cover are additional advantages to a versatile line of closers.

Features	***Benefits***
Closer Arms	Improved aesthetics and durability
	Full complement to meet any installation demand
Powder Painted Arms	Environmentally safe process
	Greater corrosion resistance
Cover Options	Plastic or metal, sprayed or plated finishes
Cast Iron Body	New design
	Strong and durable; more material added to body
Captured Valves	Reduces possibility of valve removal
Spring Adjust	Easier to adjust for optimum power setting
Springs	Chrome silicon wire, triple set for longer life
Closer Fluid	Extended temperature oil with friction-reduction additives
	Eliminates need to specify Extreme Temperature Fluid
Self Drilling Screws	Easier, quicker installation
QUIK-INSTALL™ Bracket	Easier installation of closer body

DC6200 - Multi-Sized
DC6400 - Sizes 1-6, half size adjustable

Features

Spring Power
DC6200 closers: multi-sized; fully adjustable sizes 1 through 6.
DC6400 closers: sizes 1 through 6; half-size adjustability.
For recommended sizes, see page 14.

Handing
Non-handed.

Body
Cast-iron case with seamless cold headed steel spring tube.

Arm
Standard: heavy-duty forged steel.
Arm options pages 8-10.

Spindle
Cold headed heat-treated steel.

Piston
Precision machined, heat-treated steel.

Springs
Chrome silicon wire.

Valves
Latching speed valve standard.

Closing speed valve standard.

Multiple backcheck location valve and backcheck intensity valve standard.

Delayed action valve optional. Delayed action preset for 20 seconds. Between 90° and 70° for all mountings. To order specify M71.

Seals
"O" rings.

Fluid
Standard: high lubricity extreme temperature hydraulic fluid.

Degree of Opening
Up to full 180° opening standard for regular, top jamb and parallel arm mountings, conditions permitting.

Power Adjustment Arm Bracket
15% adjustment standard.

Cover
Standard: non-metallic full cover.
Optional: slim cover; specify M76.
Optional: full metal cover; specify M73 x hand.

Mountings
Standard: regular and top jamb.
Optional mountings available; see Mountings, page 6.

Mounting Bracket
QUIK-INSTALL™ mounting bracket standard.

Fasteners
Standard: self drilling screws.
Optional: sex nuts and bolts (SNBs); specify M54.

Corrosion Protection
Painted protective coating on all metal surfaces for use in corrosive environments. To order specify M75.

Security Package
Includes heavy-duty parallel or regular arm, full metal cover and security Torx® machine screws. Specify M87 x arm x hand.

Warranty
Ten-year limited warranty. Refer to Corbin Russwin price book for details.

Certification/Compliance

Barrier-Free Code Compliance
The DC6000 Series Door Closers listed below conform to the 5 lbf. maximum door opening force requirement for non-fire-rated interior hinged doors, according to:

Americans with Disabilities Act (ADA)
Complies with the Accessibility Guidelines for Buildings and Facilities, Section 4.13.11

ANSI
Meets A156.4, Grade 1.
Meets A117.1.

DC6200	DC6412
DC6210	DC6421
DC6220	DC6401
DC6411	

These door closers are certified by Corbin Russwin Architectural Hardware to comply with the above standards when properly installed and (if applicable) adjusted, in regular arm, parallel arm and top jamb mountings.

UL / ULC / UL10c
Listed for fire and cycle requirements.

Finishes

Standard painted finishes

Old Designation	Description	Specify
USP	Primed	600
SBL	Silver Aluminum	689
LBL	Dark Bronze	690
DBL	Light Bronze	691
FBL	Black	693
GBL	Satin Brass	696
Plated finishes available on arms and full cover* or full metal cover.		
US3	Bright Brass	605
US4	Satin Brass	606
US9	Bright Bronze	611
US10	Satin Bronze	612
US26	Bright Chromium Plated	625
US26D	Satin Chromium Plated	626
For split finish of closer cover and arm, specify cover finish first, then arm finish (e.g., DC6200 x 625 x 689).		

*Full cover available in 605, 606, 625 and 626 only.

DC6200 - Multi-Sized
DC6400 - Sizes 1-6, half-size adjustable

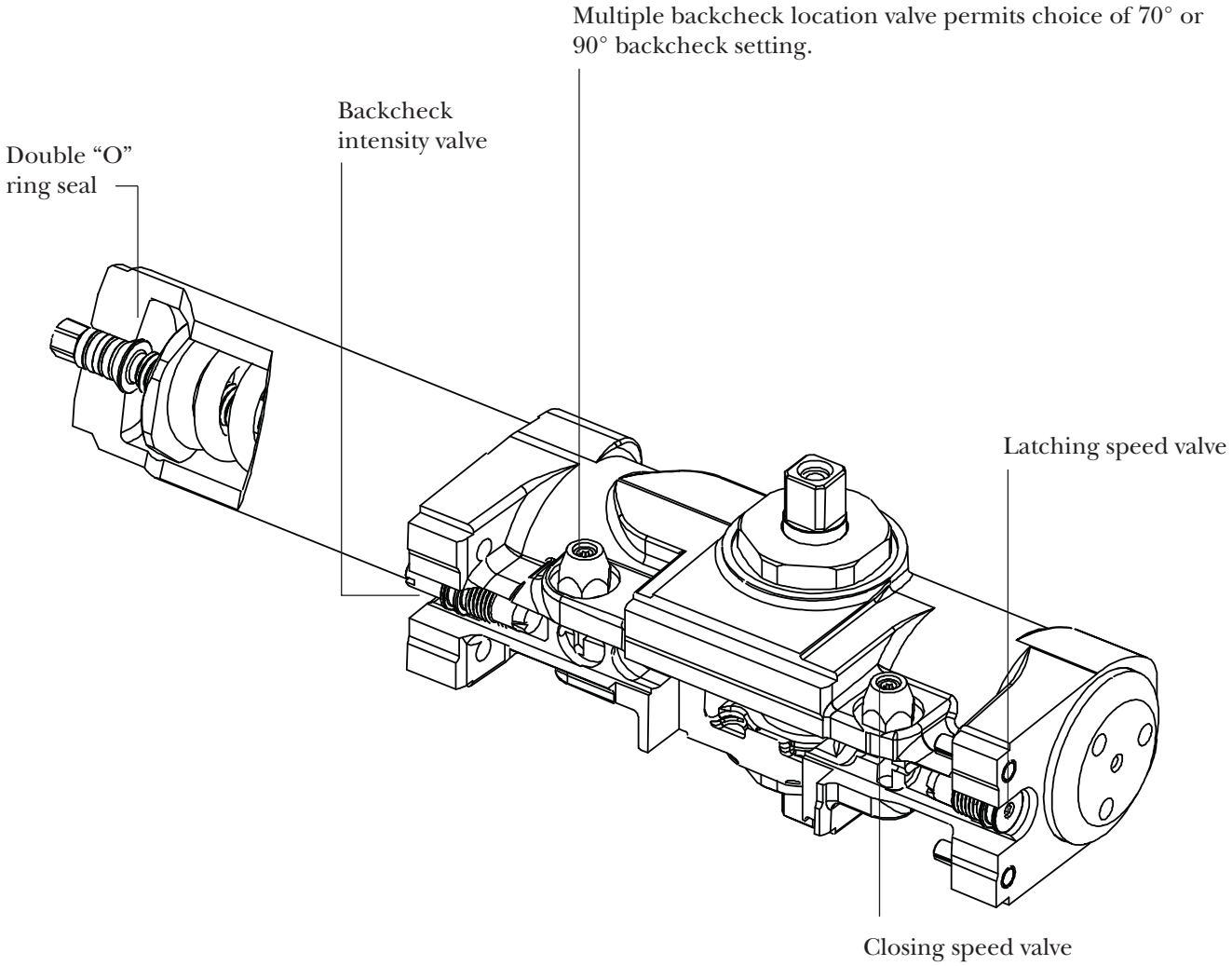

QUIK-INSTALL™ mounting bracket included, see p11

Regular Arm Mounting DC6200, DC6400 Series
Most common mounting, providing the greatest closing efficiency. Closer is mounted on the pull side, with the arm almost perpendicular to the face of the door. Arm bracket is attached to the door frame.

Parallel Arm Mounting DC6210, DC6410 Series
Allows inside application of closer on out-swinging doors. Closer is mounted on the push side, with the arm almost parallel to the face of the door. Arm does not project from the opening.

Top Jamb Mounting DC6220, DC6420 Series
Accommodates reveals up to 3-1/4" (83mm). Closer is mounted on the frame on the push side, with the arm perpendicular to the face of the door. Arm bracket is mounted on the door. Minimum 1-3/4" (44mm) top jamb required.

Track Mounting DC6230, DC6430 Series
Closer is top jamb mounted on the pull side; arm is connected to a door-mounted track. Maximum degree of opening is 100°. Maximum closing power is size 4. Minimum 3" (76mm) frame face required.

Track Mounting DC6240, DC6440 Series
Closer is mounted on push side of door; arm is connected to a stop mounted track. Maximum degree of opening is 100°. Maximum closing power - size 4.

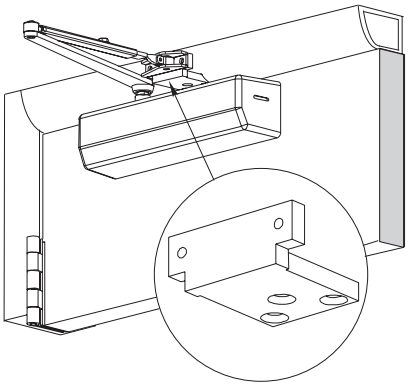

Regular Arm Mounting with Mortise Arm Bracket
Used on inadequately reinforced frames, such as those with bull nose trims.

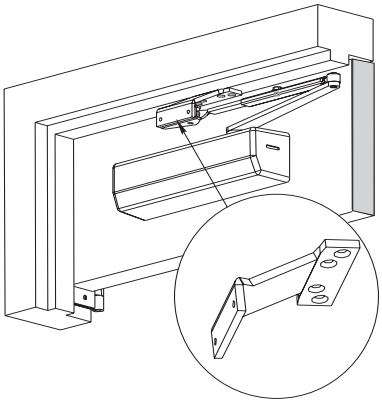

Parallel Arm with Offset Angle Bracket Mounting
Allows parallel arm mounting when used with an overhead door holder.

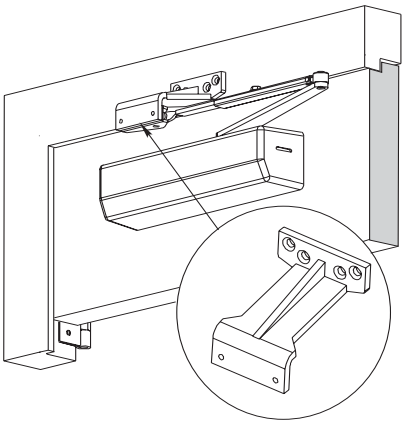

Parallel Arm Mounting with Flush Transom Bracket
Allows parallel arm mounting on flush transom applications.

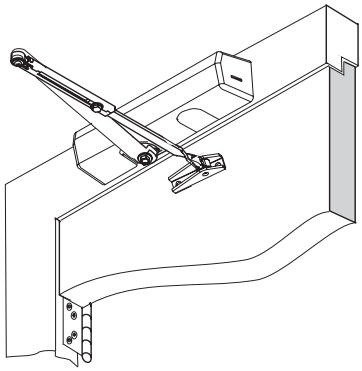

Top Jamb Flush Transom Mounting
Closer is top jamb mounted on the push side; arm is attached to the door.

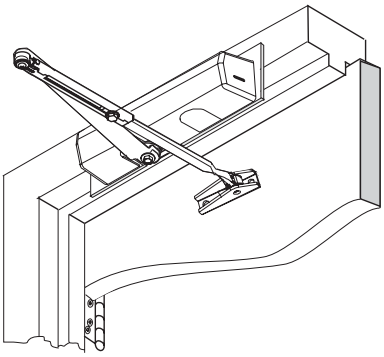

Narrow Frame Mounting
For use when the frame is too narrow for a normal top jamb or top jamb track mounting.

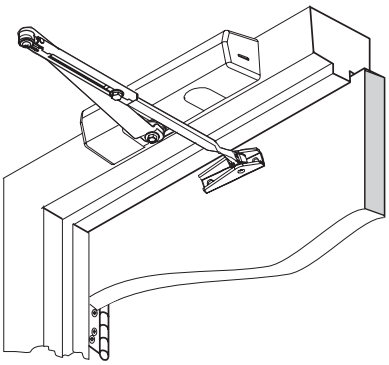

Top Jamb Deep Reveal Mounting
For reveals greater than 3-1/4" (83mm), up to 7-1/4" (184mm).

688F95
(Non Hold-Open)

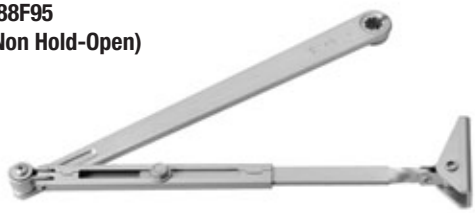

688F77
(Hold-Open)

Regular Arm

- Used with Regular Arm mounting (pull side) and Top Jamb mounting (push side)
- Non Hold-Open arm standard on the DC6200 and DC6400 closers
- Hold-Open arm optional, specify closer x **A1***

597F52
(Non Hold-Open)

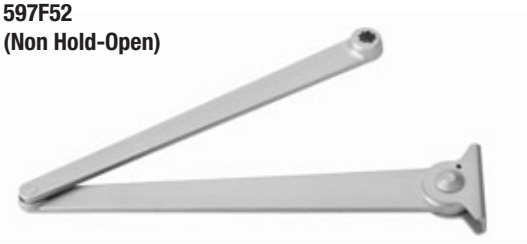

Heavy-Duty Regular Arm

- Recommended for high-use, high-abuse environments
- Tamper-resistant, solid forged steel riveted arm
- Mounted on pull side
- Not available in plated finishes
- Optional on DC6200 and DC6400 closers, specify closer x **A10**

688F95 x 188F41
(Non Hold-Open)

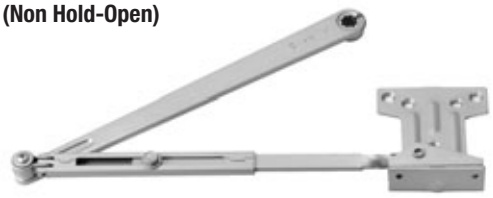

688F77 x 509F49
(Hold-Open)

Parallel Arm

- Mounted on push side
- Non Hold-Open arm – combines regular arm with parallel arm mounting bracket
- Hold-Open arm – combines regular hold-open arm with parallel arm mounting bracket
- Non Hold-open arm standard – order DC6210 or DC6410 series
- Hold-Open arm optional, specify closer x **A1***

Specify finish when ordering arms.

*Not allowed by code on fire doors.

689F02
(Non Hold-Open)

689F01
(Hold-Open)

Heavy-Duty Parallel Arm

- Recommended for high-use, high-abuse environments
- Tamper-resistant, solid forged steel riveted arm
- Mounted on push side
- Not available in plated finishes
- Optional on DC6210 and DC6410 closers
- Non Hold-Open arm, specify closer x **A3**
- Hold-Open arm, specify closer x **A2***. Hold-open range 85° to 110°
- For use with overhead stops, specify closer x **A13** (non hold-open only)

689F03
(Non Hold-Open)

689F04
(Hold-Open)

Heavy-Duty Reversible Backstop Parallel Arm

- Recommended for high-use, high-abuse environments
- Tamper-resistant, solid forged steel riveted arm (mounted on push side)
- Field-reversible steel lug restricts degree of opening to protect door, wall and hardware
- Requires both backcheck valves on closer
- Shipped standard as left hand. Handing can be reversed in the field
- Not available in plated finishes
- Optional on DC6210 and DC6410 closers
- Non Hold-Open arm, specify closer x **A4**. Door stop range 85° to 110°
- Hold-Open arm, specify closer x **A5***. Door stop/hold-open range 85° to 110°

(Non Hold-Open)

(Hold-Open)

Heavy-Duty Spring Stop Parallel Arm

- Recommended for high-use, high-abuse environments
- Integrates a door closer, shock absorber and auxiliary heavy-duty overhead stop
- Requires both backcheck valves on the closer
- Not available in plated finishes
- Hold-Open*
  - Holder mechanism tension adjustable
  - Hold-open can be engaged/disengaged with a 1/4 turn of the mechanism with a standard blade type screwdriver
- Order with DC6210 or DC6410 closers
- Non Hold-Open arm, specify closer x **A11 x door width**
- Hold-Open arm, specify closer x **A12 x door width**

Door Width	Model Number	
	Non Hold-Open	Hold-Open
28" - 32" (71cm - 81cm)	615F52	615F51
33" - 41" (84cm - 104cm)	615F54	615F53
42" - 48" (107cm - 122cm)	615F56	615F55

Refer to page 12 for bracket information

Specify finish when ordering arms.

*Not allowed by code on fire doors.

Pull Side Track Arm

- Provides a clean aesthetic look with maximum 100° door swing and a minimum door width of 28"(71cm)
- Mounted on pull side
- Hold-open can be set for 85°, 90°, 95°, or 100°
- Not available in plated finishes
- Non Hold-Open standard on DC6230 or DC6430 closers
- Hold-Open, specify closer x **A1***

	Track Only	Arm Only
Non Hold-Open	294F44	294F38
Hold-Open	294F45	

Push Side Track Arm

- Clean aesthetic look for doors opening a maximum of 100˚ and a minimum door width of 32" (81cm)
- Backcheck option recommended
- Not available in plated finishes
- Hold-Open*
  - From 85° to 100°
  - Turn knob offers the use the option of turning hold-open on or off
- Mounted on push side

	Track and Arm	Track Only	Arm Only
Non Hold-Open	615F31	615F29	615F33
Hold-Open	615F32	615F37	615F39

Deep Reveal Arm (3-3/8" (86mm) - 7-1/4" (184mm))

- Accommodates top jamb mounting for reveals up to 7-1/4" (184mm), depending on door and frame conditions
- Mounted on push side
- Optional on DC6220 and DC6420 closers
- Non Hold-Open, specify closer x **A6**
- Hold-Open, specify closer x **A8***

Non Hold-Open	691F72
Hold-Open	691F74

Specify finish when ordering arms or tracks.

*Not allowed by code on fire doors.

188F03

QUIK-INSTALL™ Mounting Bracket

- Standard on all closers
- Reduces installation time
- Ensures correct mounting
- Bracket is first mounted to door or frame, then closer is attached
- Bracket size: 1-3/4" (44mm) (vertical) x 6" (152mm) (horizontal)
- Hole spacing: 1" (25mm) (vertical) x 4-5/16" (110mm) (horizontal)

244F17

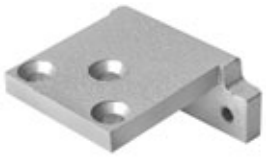

Mortise Arm Bracket for Regular Arm Mounting

- For regular arm mounting where frame requires reinforcement, i.e., on frames with bull nose trim
- Not available in plated finishes
- Specify closer x M84

188F41

Parallel Arm Non Hold-Open Bracket

- Converts regular arm to parallel arm closer
- Standard with parallel arm mounting
- Packed with five screws and 691F78 spacer

509F49

Parallel Arm Hold-Open Bracket

- Converts regular arm hold-open to parallel arm hold-open closer
- Standard with parallel arm hold-open mounting

188F62

Parallel Arm Offset Bracket

- Required when parallel arm is used in conjunction with an overhead door holder
- Specify closer x M83

188F63

Parallel Arm Flush Transom Bracket

- Required when parallel arm mounting is used on a flush transom application
- Not available in plated finishes
- Specify closer x M82

Specify finish when ordering parts.

615F58

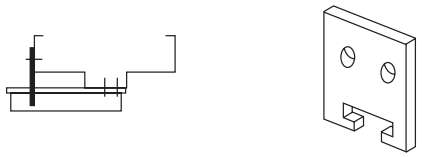

Reinforcing Bracket

- Supplied as standard for use with A11 and A12 spring stop arms
- Provides additional support to the soffit plate on installations with door frame reveals from 1-7/8" to 4-5/8" (48mm to 117mm)
- Not available in plated finishes

615F59

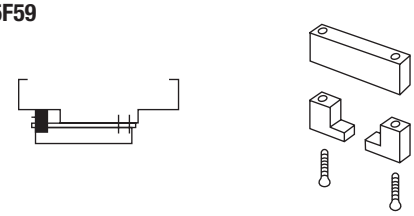

Deep Reveal Reinforcement Kit

- For use with A11 and A12 spring stop arms
- Used to support the soffit plate on installations with wide frames. Clamps may be used with or without the spacer block, depending on frame conditions
- Not available in plated finishes
- For frames deeper than 4-5/8" (117mm), specify closer x M103

615F60

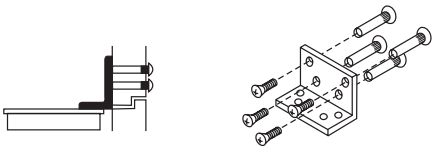

Flush Partition Bracket

- For use with A11 and A12 spring stop arms where rabbeted or flush transom conditions prevent installation of the soffit plate assembly
- Bracket fastens to the overhead transom to provide a mounting surface for the soffit plate assembly
- Specify closer x M104

447F14

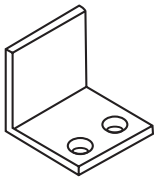

Angle Support Bracket

- Available separately for mounting A2, A3, A4 and A5 heavy-duty arms on narrow frame or soffit conditions
- Specify closer x M85

597F92-1/2"
597F93-5/8"

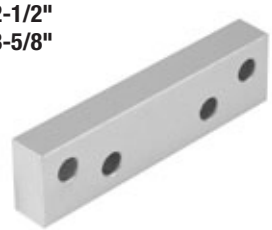

Blade Stop Spacer

- Specify closer x M77 (597F92)
- Specify closer x M78 (597F93)

Maximum Power

Normal Power

Power Adjustment Arm Bracket

- Standard on all closers without hold-open, except heavy-duty and track type
- In regular arm or top jamb mounting, bracket may be reversed to increase closing power 15%

Specify finish when ordering parts.

597F78

Full Cover

- Standard on all DC6000 series door closers
- Completely covers closer body
- Non-handed
- Dimensions: 11-5/8" (295mm) x 3" (76mm) x 2-3/4" (70mm) deep
- Available in painted and some plated finishes

387F40
188F19 Spindle Cap and Screw

Slim Cover

- Optional on all DC6000 Series Door Closers
- Non-handed
- Cap covers bottom of spindle
- Available in painted finishes only
- Dimensions: 11-5/8" (295mm) x 2" (51mm) x 2-3/4" (70mm) deep
- To order specify closer x M76

Full Metal Cover

- For use in high-abuse applications
- Specify hand; not field reversible
- Available in painted and plated finishes
- Dimensions: 11-1/2" (292mm) x 2-7/8" (73mm) x 2-3/4" (70mm) deep

Cover Model Number	
RH/LHR	**LH/RHR**
603F55	603F57

Drop Plate

Permits parallel arm or top jamb mounting on door when top rail is too narrow to install closer in the regular manner. Minimum 2" (51mm) top rail required. To order separately, specify Part No. x Finish.

Closer Series	Drop Plate	
	With Slim Cover	With Full Cover
DC6210, DC6410	188F65	597F58
DC6220, DC6420	188F65	188F65
DC6230, DC6430 DC6240, DC6440	294F40	597F59

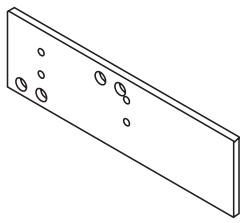

Retrofit Plates

For installation of Corbin Russwin DC6200 Closers where doors & frames have been prepared for LCN heavy-duty surface closers. To order with closers specify Closer x Quick Code, see page 19.

To Replace LCN Model		Model Number
4040/4041	Regular Arm	615F63
4040/4041	Parallel Arm	615F61
4110EDA	Parallel Arm	615F64
4010	Regular Arm	615F62

Factors in Determining Closer Size

1 – Weight and Height of Door

Doors vary in weight from light hollow-core wood doors to heavy metal doors. Door sizes listed in the chart are based on doors of standard weight and height. Extra-light or extra-heavy weight or unusual height must be compensated for.

2 – Draft and Wind Conditions

Draft and wind conditions are perhaps the most important factors to consider in determining the closer size required. Sizes listed in the chart apply to normal conditions. Stairwells, air conditioning, building construction, and door location can cause strong draft and wind conditions; these may necessitate adjusting spring power to a larger size or using a closer one size larger.

3 – Location of Closer

The degree of door opening required determines the location of the closer on the door. Closer sizes listed in the chart are based on 180° opening.

4 – Special Conditions

Deep reveals require optional extended arms. A top jamb plate is required when the jamb is too narrow for a normal top jamb mounting.

5 – Code Compliance

A multi-sized, fully adjustable closer such as the DC6200 closer provides the greatest flexibility in balancing barrier-free access, security and life safety codes. However, when a manual closer is installed and adjusted to comply with ADA or any other reduced opening force requirements, it may no longer have sufficient power to close and latch the door reliably.

Recommended Door Closer sizes

Application	Door Width			
	Interior	Exterior, In-Swinging	Exterior, Out-Swinging	Recommended Closer Size
Regular or Top Jamb	2'4" (71cm)	—	—	1
	3'0" (91cm)	—	—	2
	3'6" (107cm)	2'6" (76cm)	3'0" (91cm)	3
	4'0" (122cm)	3'0" (91cm)	3'6" (107cm)	4
	4'6" (137cm)	3'6" (107cm)	4'0" (122cm)	5
	5'0" (152cm)	4'0" (122cm)	4'6" (137cm)	6
Parallel Arm	2'4" (71cm)	—	—	1
	2'6" (76cm)	—	—	2
	3'0" (91cm)	—	2'6" (76cm)	3
	3'6" (107cm)	—	3'0" (91cm)	4
	4'0" (122cm)	—	3'6" (107cm)	5
	4'6" (137cm)	—	4'0" (122cm)	6

Handing

Refers to the direction a door swings; always determined from the outside of the door.

Regular Mounting

Door: left hand
Closer: left hand pull side

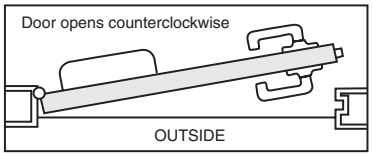

Door: right hand
Closer: right hand pull side

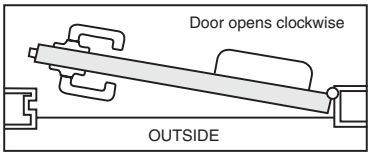

Parallel Arm Mounting

Door: left hand reverse bevel
Closer: right hand push side

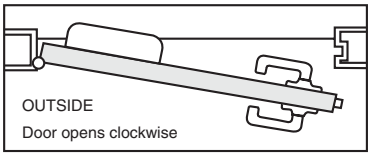

Door: right hand reverse bevel
Closer: left hand push side

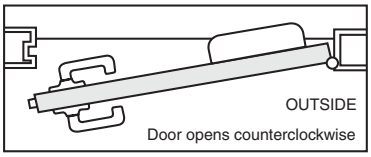

Top Jamb Mounting

Door: left hand reverse bevel
Closer: right hand push side

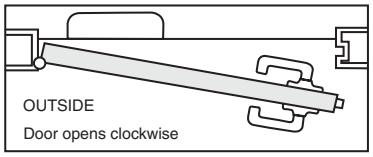

Door: right hand reverse bevel
Closer: left hand push side

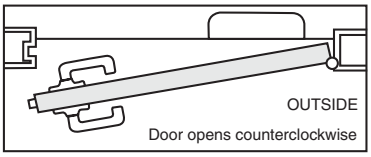

Backcheck
Slows a door at approximately 70° of the opening cycle, by providing cushioned resistance to a forceful opening. Designed to protect people and objects behind the door and to prevent damage to the closer, hardware, and wall. Intensity can be increased or decreased. Not intended to act as a stop.

Backcheck Location
The point (approximately 70°) in the opening cycle where backcheck takes effect.

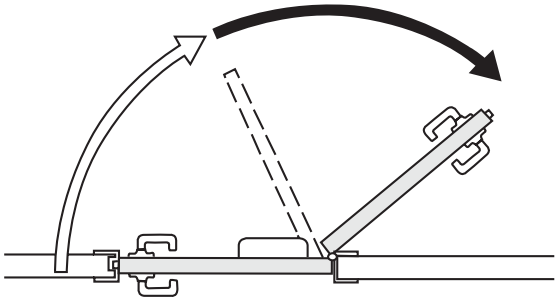

Closing Speed
The speed at which a door swings from the full open position to within a few degrees of latching. See Latching Speed.

Corrosion Protection
Additional painted covering on all external parts to deter oxidation and corrosion.

Delayed Action
Slows door closing speed between maximum opening and approximately 70°. Often specified to meet barrier-free codes which require longer closing times.

Door Stop
A device to stop the swing of a door.

Hold-Open
Maintains door at a particular degree of opening. A mechanical hold-open may not be used on labeled fire doors, which must be self-closing.

Latching Speed
The speed of the door during the last few degrees of closing. Allows latching and prevents slamming.

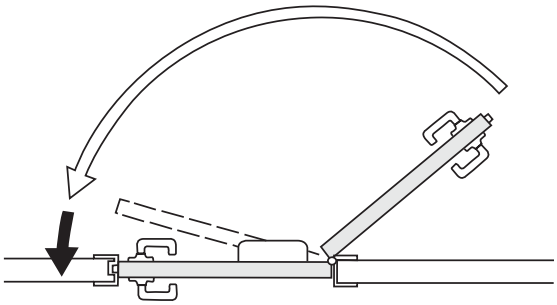

Mounting
The method by which a closer is attached to the door and frame.

Multiple Backcheck Location Valve
Valve that changes the degree of door angle where backcheck occurs.

Multi-Sized Closer
A closer whose spring design allows full adjustment of the spring power size from 1 through 6.

QUIK-INSTALL™ Mounting Bracket
Unique bracket which simplifies installation and minimizes installer fatigue.

Sex Nuts and Bolts (SNBs)
Through-bolts required for all non-steel-reinforced fire doors, and recommended for non-reinforced wood and mineral core doors.

Sized Closer
A closer whose spring design allows for a fixed spring power size 1 through 6.

Spring Power
A measurement of closing force, or the ability to overcome draft, air pressure, weight or other resistance to door closing.

Star Punch
An eight-point hole in the closer arm, permitting spindle pre-loading. Provides full functioning of backcheck and delayed action valves.

Universal Mounting
The ability of a closer to accommodate either hand for regular, top jamb or (using a bracket) parallel arm mounting.

Ordering Examples

Stock

Quantity	Series/ Mounting/Size	Finish	Misc. Options
50	DC6210	689	M54

Where to find ordering information and quick codes

Series/Mounting/Size Page 17
Arm Page 18
Finish Page 18
Handing Page 18
Door Thickness Page 18
Miscellaneous Options Page 19

Job Specific

Quantity	Series/ Mounting/Size	Arm	Finish	Hand	Thickness	Options
50	DC6410	A6	626	RH	D138	M71-M73

Split Finish

Quantity	Series/ Mounting/Size	Finish		Misc. Options
		Cover	Arm	
10	DC6210	626	689	M54

Note:
- Door closer warranty becomes void if it is installed on the exterior side of a door in the exterior wall of a building
- It is strongly recommended, and it is required on fire door assemblies, that doors having a door closer be hung on ball-bearing or anti-friction hinges or pivots
- Failure to use the correct type and size fasteners may void factory warranty
- Fasteners for fire/smoke door assemblies must conform to NFPA 80. In some applications additional fasteners may be mandated by NFPA 80 that are not shipped with Corbin Russwin's standard product, such as sleeve-units/sex nuts or through-bolts and grommet nuts

Series/Mounting/Size

Description	Mounting	Non-sized Specify	Size 1 Specify	Size 2 Specify	Size 3 Specify	Size 4 Specify	Size 5 Specify	Size 6 Specify
DC6200 Closers Multi-sized; full adjustability from size 1-6	Regular arm	DC6200	—	—	—	—	—	—
	Parallel arm	DC6210	—	—	—	—	—	—
	Top jamb	DC6220	—	—	—	—	—	—
	Track (Pull Side)	DC6230	—	—	—	—	—	—
	Track (Push Side)	DC6240	—	—	—	—	—	—
DC6400 Closers Sized; ½-size adjustability	Regular arm	—	DC6401	DC6402	DC6403	DC6404	DC6405	DC6406
	Parallel arm	—	DC6411	DC6412	DC6413	DC6414	DC6415	DC6416
	Top jamb	—	DC6421	DC6422	DC6423	DC6424	DC6425	DC6426
	Track (Pull Side)	—	—	—	DC6433	DC6434	DC6435	DC6436
	Track (Push Side)	—	—	—	DC6443	DC6444	DC6445	DC6446

Arm

Arm	Specify Quick Code
Regular non hold-open	(standard)
Hold-open	A1*
Heavy duty parallel with hold-open	A2*
Heavy duty parallel non hold-open	A3
Heavy duty backstop non hold-open	A4
Heavy-duty backstop with hold-open	A5*
Deep reveal (3-3/8"-7-1/4")	A6
Deep reveal with hold-open	A8*
Heavy-duty regular non hold-open	A10
Spring stop non hold-open	A11
Spring stop heavy-duty with hold-open	A12*
Push side track with hold-open	A1*

***Hold-open arms cannot be used on fire doors.**

Handing

Hand	Specify Quick Code
Left Hand/Right Hand Reverse	LH
Right Hand/Left Hand Reverse	RH

Finish

Standard painted finishes

Old Designation	Description	Specify Quick Code
USP	Primed for Painting	600
SBL	Silver Aluminum Painted	689
LBL	Dark Bronze Painted	690
DBL	Light Bronze Painted	691
FBL	Black Painted	693
GBL	Satin Brass Painted	696

Plated finishes available on arms and full cover* or full metal cover

US3	Bright Brass	605
US4	Satin Brass	606
US9	Bright Bronze	611
US10	Satin Bronze	612
US26	Bright Chromium Plated	625
US26D	Satin Chromium Plated	626

For split finish of closer cover and arm, specify cover finish first, then arm finish (e.g., DC6200 x 625 x 689).

*Full cover available in 605, 605, 625 and 626 only.

Blade Stop

Spacer	Specify Quick Code
1/2"	M77
5/8"	M78

Door Thickness

Door Thickness	Specify Quick Code
1-3/8" (35mm)	D138
1-3/4" (44mm)	(standard)

Miscellaneous Options

Description	Specify Quick Code
Security Torx® machine screws	M04
Sex nuts and bolts (SNBs)	M54
Backcheck intensity and location valves	(standard)
Delayed action	M71
Full cover	(standard)
Full metal cover (Handed)	M73
Extreme temperature fluid	(standard)
Corrosion protection	M75
Slim cover	M76
Drop plates - **order by number** (formerly M80, M81 and M102 quick codes)	

Closer Series	Old Quick Ship #	Drop Plate	
		With Slim Cover	With Full Cover
DC6210, DC6410 (Parallel)	M80	188F65	597F58
DC6220, DC6420 (Top Jamb)	M80	188F65	188F65
DC6230, DC6430 (Pull Side)	M81	294F40	597F59
DC6240, DC6440 (Push Side)	M102	294F40	597F59

Heavy-duty parallel arm flush transom bracket (499F30) used with A2, A3, A4, A5 arms	M79
Parallel arm flush transom bracket (parallel or A1)	M82
Parallel arm offset bracket	M83
Mortise arm bracket (for regular arm mounting)	M84
Angle support bracket	M85
Spacer (691F78) (formerly M86 quick code)	(standard)
Security package (available with A2, A3, A4, A5 and A10 optional arms). Covers are handed.	M87
Retrofit kit LCN 4041RA	M101A
Retrofit kit LCN 4041PA	M101B
Retrofit kit LCN 4110EDA	M101C
Retrofit kit LCN 4010	M101D
Deep reveal reinforcement kit	M103
Flush partition	M104

ANSI A156.4 Certified Closer Cross Reference

ANSI Number	Function	Series	PT 4A 15% Power Adjustment	PT 4B 35% Power Adjustment	PT 4C 50% Power Adjustment	PT 4D Adjustable Backcheck	PT 4F Delayed Action	PT 4G Dead Stop	PT 4H Fully Adjustable
CO2011 (PT 1)	Hinge Side Mounting	DC6200 DC6400	S S	S S	S S	S S	O O	N/A N/A	S N/A
CO2051 (PT 1)	Hinge Side Mounting	DC6200-A1 DC6400-A1	S S	S S	S S	S S	O O	N/A N/A	S N/A
CO2021 (PT 1)	Parallel Arm Mounting	DC6210 DC6410	S S	S S	S S	S S	O O	O O	S N/A
CO2061 (PT 1)	Parallel Arm Mounting	DC6210-A1 DC6410-A1	S S	S S	S S	S S	O O	O O	S N/A
CO2041 (PT 1)	Top Jamb Mounting	DC6220 DC6420	S S	S S	S S	S S	O O	N/A N/A	S N/A
CO2081 (PT 1)	Top Jamb Mounting	DC6220-A1 DC6420-A1	S S	S S	S S	S S	O O	N/A N/A	S N/A
CO2231 (PT 1)	Push Side Track Mounting	DC6240 DC6440	S S	S S	S S	S S	O O	O O	S N/A
CO2241 (PT 1)	Push Side Track Mounting	DC6240-A1 DC6440-A1	S S	S S	S S	S S	O O	O O	S N/A
CO2251 (PT 1)	Pull Side Track Mounting	DC6230 DC6430	S S	S S	S S	S S	O O	O O	S N/A
CO2261 (PT 1)	Pull Side Track Mounting	DC6230-A1 DC6430-A1	S S	S S	S S	S S	O O	O O	S N/A

ANSI Performance Requirements: (PT 1) — 2,000,000 cycles — closer without backcheck feature.
ANSI Performance Requirements: (PT 1) — 1,500,000 cycles — closer with backcheck feature.
N/A = not available S = standard O = option available
ANSI Options:

DC6200 includes PT4-A, B, C, D, H. Optional: PT4-F, G, J.
DC6400 includes PT4-A, B, C, D. Optional: PT4-F, G, J.

Suggested Specification

Door closers shall be of rack and pinion construction with a cold headed heat-treated steel spindle and a sintered steel piston precision machined and heat treated. The case shall be of cast iron with seamless cold headed steel spring tube. A two-piece or seamed spring tube shall not be acceptable. Springs shall be tempered chrome silicon. Closers shall have a heavy-duty, forged steel main arm.

Optional arms shall include parallel, hold-open, heavy-duty, heavy-duty hold-open, heavy-duty reversible backstop, heavy-duty reversible backstop with hold-open, heavy-duty spring stop, heavy-duty spring stop with hold-open, deep reveal, top jamb track and stop mounted track.

The following size options shall be available:

Fully adjustable spring power to accommodate sizes 1 through 6.

Spring power shall be adjustable by one half size over minimum for each size.

No spring power size adjustment; closer provided by size.

All sizes shall be accommodated in one closer body. Closing shall be controlled by two valves — one to control closing speed and one to control latching speed. Valves shall be concealed against unauthorized adjustment and be non-critical with “O” ring seals.

Delayed action shall be available and shall be accomplished with a separate valve.

Closers shall be available with an adjustable backcheck intensity valve with a safety feature that automatically relieves internal pressure when backcheck has reached the desired adjustment level. Valves shall be accessible without removing the closer from the door.

Closers shall be available with a backcheck location valve, providing a choice of locations where backcheck begins in the door opening cycle between 70° and 90° of door opening. This valve shall be operative on regular, top jamb, parallel arm, and track type mountings.

Closers shall be surface applied with rectangular cover, and shall be devoid of manufacturer’s trademarks. Closers shall not project over $2^3/_4$", and shall be capable of mounting on $1^3/_4$" top rail or inverted mounting on $1^3/_4$" top jamb. Full cover and full metal cover with security fasteners shall be available. When required, covers shall be available in plated finishes. Closers without hold-open shall be regularly furnished with power adjustment arm bracket capable of providing a 15% power adjustment. A QUIK-INSTALL™ mounting bracket to attach the closer shall be regularly furnished. Closers not having a mounting bracket shall not be acceptable. Hydraulic fluid shall be of a type requiring no seasonal valve readjustment due to extreme temperature variations. Closers mounted top jamb and parallel arm shall allow for full 180° door opening.

Closers with non hold-open arms shall be listed by Underwriters Laboratories.

All closers shall be available in architectural finishes to match corresponding door hardware.

Certification:
ANSI 156.4, Grade 1
ADA/ANSI A117.1
UL10C and UBC

Closers shall carry a ten-year limited warranty.

Closers shall be Corbin Russwin (DC6200) (DC6400) series.

Notes

Notes

For more information regarding Corbin Russwin Locksets, Exit Devices, Door Controls and Key Systems, contact your authorized Corbin Russwin Distributor or Sales Representative.

In U.S.:
Corbin Russwin Architectural Hardware
1902 Airport Road
Monroe, NC 28110
Phone 800-543-3658
Fax 800-447-6714
www.corbin-russwin.com

In Canada:
Yale-Corbin Canada Ltd.
6940 Edwards Boulevard
Mississauga, ONT L5T 2W2
Phone 800-461-3007
Fax 800-461-8989
www.yalecorbin.on.ca

The ASSA ABLOY Group is the world's leading manufacturer and supplier of locking solutions, dedicated to satisfying end-user needs for security, safety and convenience.

Corbin Russwin and Design® is a registered trademark of Corbin Russwin Inc. QUIK-INSTALL™ is a trademark of CRI. These materials are protected under US copyright laws. All contents current at time of publication. Corbin Russwin, Inc. reserves the right to change availability of any item in this catalog, its design, construction, and/or its materials. Other products brand names may be trademarked or registered trademarks of their respective owners and are mentioned for reference purposes only.
Copyright© 2004, Yale Security Inc. All rights reserved.

An ASSA ABLOY Group company

ASSA ABLOY

45052-CG-15.0-6/04N