Corbin Russwin®

Electro-Mechanical Door Closers

DC26900 Series

An ASSA ABLOY Group company

ASSA ABLOY

Applications

Electromechanical Door Closers DC26900 Series

DC26900 Series

Applications

The proven durability of a DC2000 Series door closer with the added benefit of code compliant electromechanical hold-open. Easily linked into a smoke, fire, heat or security system, the DC26900 closer is best used in new construction or renovation for:

- Corridor doors
- Stairtower doors
- Office doors
- Fire doors
- Exit doors
- Patient room doors

Advantages

- Proven durability and reliability of the Corbin Russwin DC2000 Series Door Closer
- Regular, top jamb, parallel arm, track, and free swinging arm and track mountings available
- Low voltage AC or DC systems available
- Adjustable degree of hold-open up to 180 depending on application
- Permits barrier-free traffic
- Eliminates need for separate electro-magnetic holder

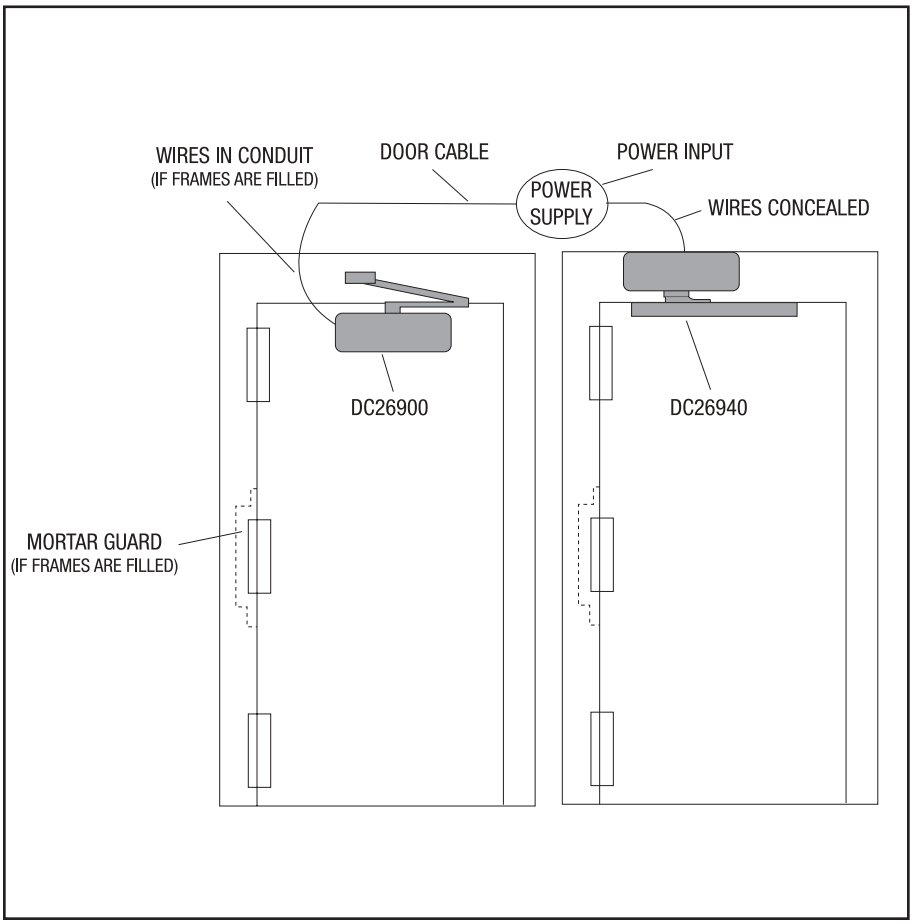

Applications	2
Features	3
Options & Accessories	4
How to Order	5
How to Specify	7

This catalog can be found on the Internet at the Corbin Russwin website at: www.corbin-russwin.com

Features

Electromechanical Door Closers DC26900 Series

Features

Spring Power
Sizes 2, 3, 4, 5, and 6 available.

Handing
Handed; specify hand.

Body
Cast iron with seamless one-piece forged steel spring tube.

Arm
Heavy-duty forged, or stamped steel.

Spindle
Triple heat-treated steel.

Piston
Precision machined heat-treated steel.

Springs
Double heat-treated steel, tempered.

Valves
Latching speed valve and closing speed valve standard.
Backcheck intensity valve with safety feature and multiple backcheck location valve optional; see How to Order, page 6.

Seals
"O" rings.

Fluid
Standard: high lubricity hydraulic fluid.

Degree of Opening
Up to full 180° opening standard for regular, top jamb and parallel arm mountings. Track arm and swing free track arm maximum: 110°.

Power Adjustment Arm Bracket
15% adjustment standard.

Cover
Full, non-metallic
10-5/16" long x 3-9/16" wide x 2-7/8" projection.

Mounting Bracket
QUIK-INSTALL™ mounting bracket standard.

Fasteners
Standard: combination screws for wood and metal doors. Sex nuts and bolts (SNBs) standard on DC26930 closers and for track on DC26940.
Optional: sex nuts and bolts or security torx® machine screws; see How to Order, page 6.

Magnet
Special alloy iron core minimizes residual magnetism.

Rectifier
Built-in rectifier standard on AC units to eliminate hum; silicon diodes used for long life.

Warranty
Ten-year limited warranty on closers; one-year limited warranty on electro-magnetic components.

Certification/Compliance

ANSI
Meets A156.4, Grade 1.

Federal
Meets FF-H-121D, Type 3000.

UL /ULc
UL listed for use on fire doors.

Finishes

BHMA 600	**Primed for Painting**
BHMA 689	**Silver Aluminum Painted**
BHMA 690	**Dark Bronze Painted**
BHMA 691	**Light Bronze Painted**
BHMA 693	**Black Painted**
BHMA 696	**Satin Brass Painted**

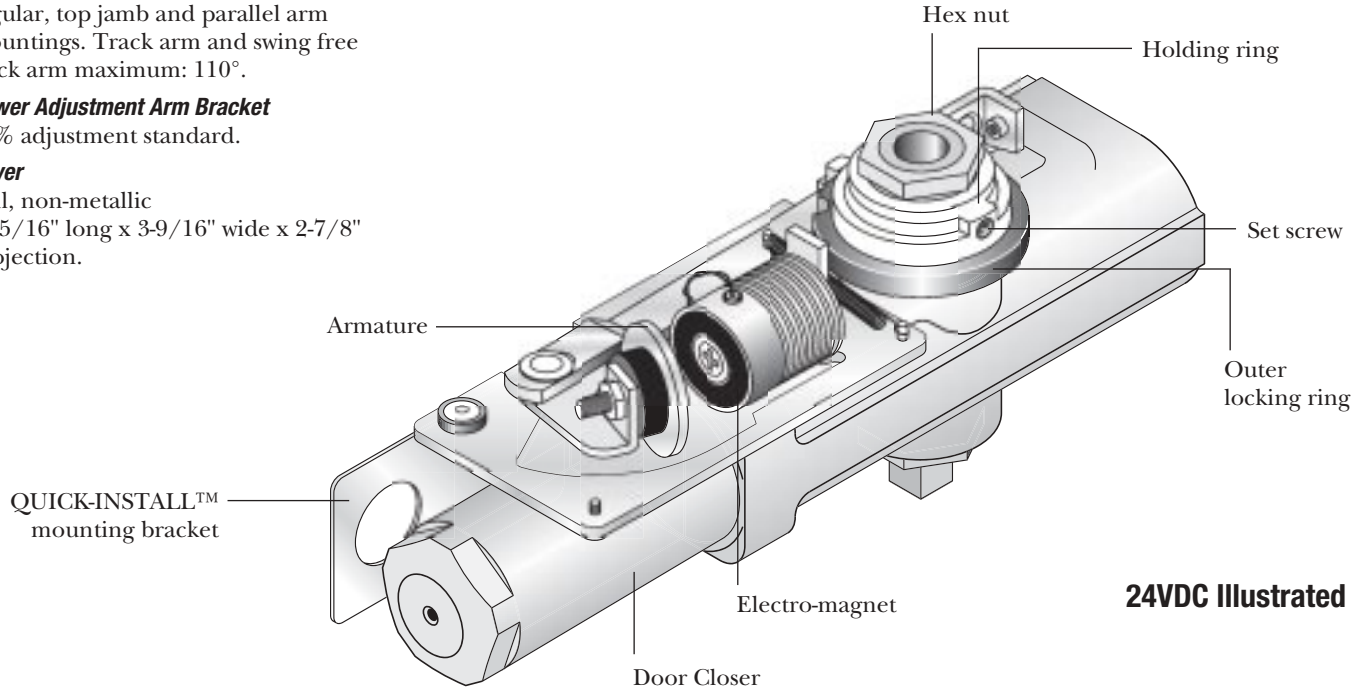

24VDC Illustrated

Options and Accessories

Electromechanical Door Closers DC26900 Series

Rectifier

RE-1 Converts current from AC to DC.
Specify Part No. RE-1.
Note: Standard on all AC units.

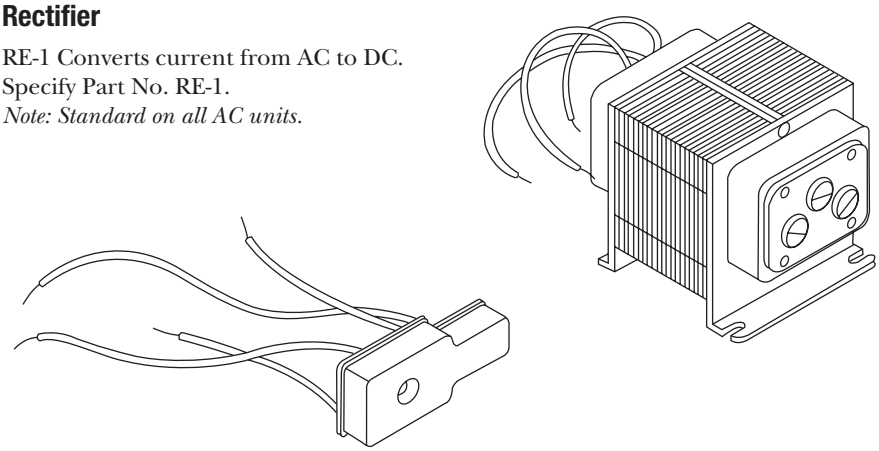

Transformer

TR-2 Self-restoring circuit breaker inside transformer coil protects against overload.

Primary
120 volt AC
60 Hz

Secondary
8VAC - 20 watts - output
16VAC - 30 watts - output
24VAC - 30 watts - output

To order, specify Part No. TR-2.

Brackets

Top Jamb Plate
Optional for use on top jamb applications; see How to Order, page 6.
To order separately, specify Part No. 408F97.

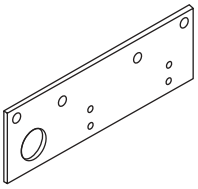

Top Jamb Plate for Track Mounting
Optional for use on track and swing free application installed on narrow style frame; see How to Order, page 6.
To order separately, specify Part No. 407F19.

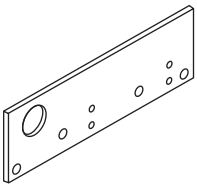

How To Order

Electromechanical Door Closers DC26900 Series

Ordering Examples

Stock Order

Quantity	Series/Mounting/Size	Finish	Hand	Voltage	Misc. Options
48	**DE26904**	**689**	**RH**	**24A**	**M54-M70**

Contract Order

Quantity	Series/Mounting/Size	Finish	Hand	Voltage	Misc. Options
34	**DC26943**	**689**	**LH**	**12D**	**M70**

Where to find ordering information and Quick Codes

Series/Mounting/Size Page 6
Finish Page 6
Handing Page 6
Door Thickness Page 6
Voltage Page 6
Miscellaneous Options Page 6

How to Order

Electromechanical Door Closers DC26900 Series

Series/Mounting/Size

Description	Mounting	Size 2 Specify	Size 3 Specify	Size 4 Specify	Size 5 Specify	Size 6 Specify
DC26900 Series Sized; non-adjustable	Regular Arm	DC26902	DC26903	DC26904	DC26905	DC26906
	Parallel Arm	DC26912	DC26913	DC26914	DC26915	DC26916
	Top Jamb	DC26922	DC26923	DC26924	DC26925	DC26926
	Track	DC26932	DC26933	DC26934	DC26935	DC26936
	Swing Free Arm	DC26942	DC26943	DC26944	DC26945	DC26946

Handing

Hand	Specify
Left Hand	LH
Right Hand	RH
Right Hand Reverse	LH
Left Hand Reverse	RH

Finish

Description		Specify
USP	Primed for Painting	600
SBL	Silver Aluminum Painted	689
LBL	Dark Bronze Painted	690
DBL	Light Bronze Painted	691
FBL	Black Painted	693
GBL	Satin Brass Painted	696

Voltage

Description	Specify
12 volt alternating current	12A
12 volt direct current	12D
24 volt alternating current	24A
24 volt direct current	24D
120 volt alternating current (DC26920, DC26930 and DC26940 closers only)	120A

Door Thickness

Door	Specify
1-3/8" (44mm)	D138
1-3/4" (51mm)	(standard)

Miscellaneous Options

Description	Specify
Security torx® machine screws	M04
Sex nuts and bolts (SNBs) (standard on DC26930, DC26940)	M54
Backcheck intensity and location valves	M70
Top jamb plate	M80
Top jamb plate for track mounting for narrow top rail	M81
Sex nuts and bolts DC26940	M102

Corbin Russwin®

How To Specify

Electromechanical Door Closers DC26900 Series

Suggested Specification

All door closers shall be DC26900 Series Door Closers as manufactured by Corbin Russwin Architectural Hardware, Clarksdale, Mississippi, USA.

Closers shall be of rack and pinion construction with a triple heat-treated cold-forged steel spindle and a sintered steel piston, heat-treated and precision machined. The case shall be of cast iron with a one-piece seamless forged spring tube. A two-piece or seamed spring tube shall not be acceptable. Springs shall be double heat-treated and tempered. Closers shall have a heavy-duty, forged steel main arm, or stamped steel when used with tracks.

Optional arms shall include parallel top jamb, free-swinging arm and track.

Closers shall be available in sizes 2-6. Closing shall be controlled by two valves – one to control closing speed and one to control latching speed. Valves shall be concealed against unauthorized adjustment and be non-critical with "O" rings.

Closers shall be available with an adjustable backcheck intensity valve with a safety feature that automatically relieves internal pressure when backcheck has reached the desired adjustment level. Valves shall be accessible without removing the closer from the door. Closers shall have an automatic air handling system to provide control of internal air expansion and contraction.

Closers shall be available with a multiple backcheck location valve, providing a choice of locations where backcheck affects the door opening cycle. This valve shall be operative on regular, top jamb, parallel arm and track type mountings.

Closers shall be surface applied with rectangular cover, and shall be devoid of manufacturer's trademarks. Closers shall be regularly furnished with power adjustment arm bracket capable of providing a 15% power adjustment. A QUIK-INSTALL™ mounting bracket to attach the closer shall be regularly furnished. Closers not having a mounting bracket shall not be acceptable. Hydraulic fluid shall be available of a type requiring no seasonal valve readjustment due to extreme temperature variations. Closers mounted top jamb and parallel arm shall allow for full 180° door opening. Closers shall be made in USA.

Track-mounted units and free swinging arm units shall allow the doors to swing 100°.

The holder magnet shall be constructed of a special alloy iron core that minimizes residual magnetism. All AC units shall have a built-in rectifier to eliminate hum. Silicon diodes shall be used to extend product life.

Closers shall be listed by Underwriters Laboratories for fire doors.

Certification:
ANSI 156.4, Grade 1.
Closers shall carry a ten-year limited warranty.
Electromechanical components shall carry a one-year limited warranty.

For more information regarding Corbin Russwin Locksets, Exit Devices, Door Controls and Key Systems, contact your authorized Corbin Russwin Distributor or Sales Representative.

In U.S.:
Corbin Russwin Architectural Hardware
1902 Airport Road
Monroe, NC 28110
Phone 800-543-3658
Fax 800-447-6714
www.corbin-russwin.com

In Canada:
Yale-Corbin Canada Ltd.
6940 Edwards Boulevard
Mississauga, ONT L5T 2W2
Phone 800-461-3007
Fax 800-461-8989
www.yalecorbin.on.ca

The ASSA ABLOY Group is the world's leading manufacturer and supplier of locks and associated products, dedicated to satisfying end-user needs for security, safety and convenience.

Corbin Russwin and Design® is a registered trademark of Corbin Russwin, Inc. Quick-Install™ is a trademark of Corbin Russwin, Inc. Other products brand names may be trademarks or registered trademarks of their respective owners and are mentioned for reference purposes only. These materials are protected under US copyright laws. All contents current at time of publication. Corbin Russwin, Inc. reserves the right to change availability of any item in this catalog, its design, construction, and/or its materials. Copyright©2001 Corbin Russwin, Inc. All rights reserved.

An ASSA ABLOY Group company

ASSA ABLOY

45042-MA-3.0-3/03U